CODE NO.	ITEM	UNIT	TOTAL QUANTITY	ROADWAY 0004	STRUCTURE REHABILITATION 0013	R-WALL IL RTE 62 SN016-W2501 0044	R-WALL US RTE 12 SN016-W2503 0044	ITS LIGHTING 0021	TRAFFIC SIGNALS 0021	AESTHETIC IMPROVEMENTS 0031	EVP 0021	EVP 0021	EVP 0021	ARLINGTON HEIGHTS SIGN RELOCATION 0004
				80% FED 20% STATE	80% FED 20% STATE	80% FED 20% STATE	80% FED 20% STATE	80% FED 20% STATE	HSIP 90% FED 10% STATE	100% LOCAL ROLLING MEADOWS	100% LOCAL ROLLING MEADOWS	100% LOCAL ARLINGTON HEIGHTS	100% LOCAL PALATINE	100% LOCAL ARLINGTON HEIGHTS
				URBAN	URBAN	URBAN	URBAN	URBAN	URBAN	URBAN	URBAN	URBAN	URBAN	URBAN
44213202	TIE BARS 1"	EACH	840	840										
48101500	AGGREGATE SHOULDERS, TYPE B 6"	SQ YD	695	695										
48101620	AGGREGATE SHOULDERS, TYPE B 10"	SQ YD	18,053	18,053										
48102100	AGGREGATE WEDGE SHOULDER, TYPE B	TON	957	957										
48203053	HOT-MIX ASPHALT SHOULDERS, 14"	SQ YD	60,676	60,676										
48300600	PORTLAND CEMENT CONCRETE SHOULDERS 11"	SQ YD	6,212	6,212										
50101700	REMOVAL OF EXISTING SUPERSTRUCTURES NO. 1	EACH	1		1									
50101800	REMOVAL OF EXISTING SUPERSTRUCTURES NO. 2	EACH	1		1									
50101900	REMOVAL OF EXISTING SUPERSTRUCTURES NO. 3	EACH	1		1									
50102000	REMOVAL OF EXISTING SUPERSTRUCTURES NO. 4	EACH	1		1									
50102100	REMOVAL OF EXISTING SUPERSTRUCTURES NO. 5	EACH	1		1									
50102400	CONCRETE REMOVAL	CU YD	680.9 ~~677.7~~		680.9 ~~677.7~~									
50104650	SLOPE WALL REMOVAL	SQ YD	2,131			1,689	442							
50157300	PROTECTIVE SHIELD	SQ YD	5,939		5,939									
50200100	STRUCTURE EXCAVATION	CU YD	7,861		4,653	2,918	290							

1

+ INDICATES SPECIALTY ITEM

STRAND ASSOCIATES®
1170 SOUTH HOUBOLT ROAD
JOLIET, ILLINOIS 60431
(815) 744-4200

USER NAME = StevenB	DESIGNED - MAG	REVISED -
	DRAWN - DJW	REVISED -
PLOT SCALE = 2.0000 ' / in.	CHECKED - DWG	REVISED -
PLOT DATE = 1/24/2025	DATE - 12/13/24	REVISED -

STATE OF ILLINOIS
DEPARTMENT OF TRANSPORTATION

SUMMARY OF QUANTITIES

SCALE: SHEET 7 OF 35 SHEETS STA. TO STA.

F.A.P. RTE.	SECTION	COUNTY	TOTAL SHEETS	SHEET NO.
342	2018-100-BR	COOK	1351	11

CONTRACT NO. 62N91

ILLINOIS FED. AID PROJECT

MODEL: Default
FILE NAME: S:\LO\6300-639\9634611\3Drawings\CAD\Micros-SS4\CAD_Sheets\C2-D162N91-sht-SOQ-SA1.dgn

1 REV. 2/25/25

CODE NO.	ITEM	UNIT	TOTAL QUANTITY	ROADWAY 0004	STRUCTURE REHABILITATION 0013	R-WALL IL RTE 62 SN016-W2501 0044	R-WALL US RTE 12 SN016-W2503 0044	ITS LIGHTING 0021	TRAFFIC SIGNALS 0021	AESTHETIC IMPROVEMENTS 0031	EVP 0021	EVP 0021	EVP 0021	ARLINGTON HEIGHTS SIGN RELOCATION 0004
				80% FED 20% STATE	80% FED 20% STATE	80% FED 20% STATE	80% FED 20% STATE	80% FED 20% STATE	HSIP 90% FED 10% STATE	100% LOCAL ROLLING MEADOWS	100% LOCAL ROLLING MEADOWS	100% LOCAL ARLINGTON HEIGHTS	100% LOCAL PALATINE	100% LOCAL ARLINGTON HEIGHTS
				URBAN	URBAN	URBAN	URBAN	URBAN	URBAN	URBAN	URBAN	URBAN	URBAN	URBAN
50200300	COFFERDAM EXCAVATION	CU YD	49		49									
50200450	REMOVAL AND DISPOSAL OF UNSUITABLE MATERIAL FOR STRUCTURES	CU YD	209.7	41.7		168.0								
50201101	COFFERDAM (TYPE 1) (LOCATION - 1)	EACH	1		1									
50201102	COFFERDAM (TYPE 1) (LOCATION - 2)	EACH	1		1									
50201103	COFFERDAM (TYPE 1) (LOCATION - 3)	EACH	1		1									
50300100	FLOOR DRAINS	EACH	32		32									
50300225	CONCRETE STRUCTURES	CU YD	1,908.7 ~~1,885.6~~		1,908.7 ~~1,885.6~~									
50300255	CONCRETE SUPERSTRUCTURE	CU YD	3,373.0		3,363.0					10.0				
50300300	PROTECTIVE COAT	SQ YD	14,820		14,483	62	275							
50301350	CONCRETE SUPERSTRUCTURE (APPROACH SLAB)	CU YD	1,648.1		1,647.6					.5				
50401305	FURNISHING AND ERECTING PRECAST PRESTRESSED CONCRETE BEAMS, IL27N	FOOT	3,491		3,491									
50401315	FURNISHING AND ERECTING PRECAST PRESTRESSED CONCRETE BEAMS, IL36N	FOOT	2,232		2,232									
50500105	FURNISHING AND ERECTING STRUCTURAL STEEL	L SUM	1		1									
50500505	STUD SHEAR CONNECTORS	EACH	38,795		38,442		353							
50800205	REINFORCEMENT BARS, EPOXY COATED	POUND	1,661,170 ~~1,657,310~~		1,614,260 ~~1,610,400~~	37,690	9,220							

1

+ INDICATES SPECIALTY ITEM

MODEL: Default
FILE NAME: S:\OL6300-6399\6346\113\Drawings\CADMicro-SS4\CAD_Sheets\C2-2D162N91-sht-SQQ-SAI.dgn

STRAND ASSOCIATES®
1170 SOUTH HOUBOLT ROAD
JOLIET, ILLINOIS 60431
(815) 744-4200

USER NAME = StevenB	DESIGNED - MAG	REVISED -	
	DRAWN - DJW	REVISED -	
PLOT SCALE = 2.0000 ' / in.	CHECKED - DWG	REVISED -	
PLOT DATE = 1/24/2025	DATE - 12/13/24	REVISED -	

STATE OF ILLINOIS
DEPARTMENT OF TRANSPORTATION

SUMMARY OF QUANTITIES

SCALE: | SHEET 8 OF 35 SHEETS | STA. TO STA.

F.A.P. RTE.	SECTION	COUNTY	TOTAL SHEETS	SHEET NO.
342	2018-100-BR	COOK	1351	12
		CONTRACT NO. 62N91		
	ILLINOIS	FED. AID PROJECT		

1 REV. 2/25/25

	CODE NO.	ITEM	UNIT	TOTAL QUANTITY	ROADWAY 0004	STRUCTURE REHABILITATION 0013	R-WALL IL RTE 62 SN016-W2501 0044	R-WALL US RTE 12 SN016-W2503 0044	ITS LIGHTING 0021	TRAFFIC SIGNALS 0021	AESTHETIC IMPROVEMENTS 0031	EVP 0021	EVP 0021	EVP 0021	ARLINGTON HEIGHTS SIGN RELOCATION 0004
					80% FED 20% STATE	80% FED 20% STATE	80% FED 20% STATE	80% FED 20% STATE	80% FED 20% STATE	HSIP 90% FED 10% STATE	100% LOCAL ROLLING MEADOWS	100% LOCAL ROLLING MEADOWS	100% LOCAL ARLINGTON HEIGHTS	100% LOCAL PALATINE	100% LOCAL ARLINGTON HEIGHTS
					URBAN	URBAN	URBAN	URBAN	URBAN	URBAN	URBAN	URBAN	URBAN	URBAN	URBAN
+	52200250	UNTREATED TIMBER LAGGING	SQ FT	1,546				1,546							
	52200900	CONCRETE STRUCTURES (RETAINING WALL)	CU YD	454.3			362.0	80.3			12.0				
	54210192	PIPE ELBOW, 36"	EACH	3	3										
	54213660	PRECAST REINFORCED CONCRETE FLARED END SECTIONS 15"	EACH	1	1										
	54213711	PRECAST REINFORCED CONCRETE FLARED END SECTIONS 66"	EACH	1	1										
	5422D036	PIPE CULVERTS, CLASS D, TYPE 2 36" (TEMPORARY)	FOOT	76	76										
	54261615	CONCRETE END SECTION, STANDARD 542001, 15", 1:6	EACH	3	3										
	54262712	METAL FLARED END SECTIONS 12"	EACH	9	9										
1	550A0360	STORM SEWERS, CLASS A, TYPE 2 15"	FOOT	55	55										
	550A0380	STORM SEWERS, CLASS A, TYPE 2 18"	FOOT	23	23										
	550A0410	STORM SEWERS, CLASS A, TYPE 2 24"	FOOT	197	197										
	550A0450	STORM SEWERS, CLASS A, TYPE A, TYPE 2 36"	FOOT	37	37										
	550A0470	STORM SEWERS, CLASS A, TYPE 2 42"	FOOT	1,099	1,099										
	550A0480	STORM SEWERS, CLASS A, TYPE 2 48"	FOOT	273	273										
	550A0500	STORM SEWERS, CLASS A, TYPE 2 60"	FOOT	1,725	1,725										
	550A0510	STORM SEWERS, CLASS A, TYPE 2 66"	FOOT	266	266										
	550A0710	STORM SEWERS, CLASS A, TYPE 3 24"	FOOT	24	24										

+ INDICATES SPECIALTY ITEM

MODEL: Default
FILE NAME: S:\OL6300--639\9634\113\Drawings\CAD\Micros-SSA\CAD_Sheets\C2-D162N91-sht-SOQ-SAI.dgn

STRAND ASSOCIATES®
1170 SOUTH HOUBOLT ROAD
JOLIET, ILLINOIS 60431
(815) 744-4200

USER NAME = StevenB	DESIGNED - MAG	REVISED -	
	DRAWN - DJW	REVISED -	
PLOT SCALE = 2.0000 ' / in.	CHECKED - DWG	REVISED -	
PLOT DATE = 1/24/2025	DATE - 12/13/24	REVISED -	

STATE OF ILLINOIS
DEPARTMENT OF TRANSPORTATION

SUMMARY OF QUANTITIES

SCALE: | SHEET 10 OF 35 SHEETS | STA. TO STA.

F.A.P. RTE.	SECTION	COUNTY	TOTAL SHEETS	SHEET NO.
342	2018-100-BR	COOK	1351	14
		CONTRACT NO. 62N91		
		ILLINOIS FED. AID PROJECT		

1 REV. 2/25/25

CODE NO.	ITEM	UNIT	TOTAL QUANTITY	ROADWAY 0004	STRUCTURE REHABILITATION 0013	R-WALL IL RTE 62 SN016-W2501 0044	R-WALL US RTE 12 SN016-W2503 0044	ITS LIGHTING 0021	TRAFFIC SIGNALS 0021	AESTHETIC IMPROVEMENTS 0031	EVP 0021	EVP 0021	EVP 0021	ARLINGTON HEIGHTS SIGN RELOCATION 0004
				80% FED 20% STATE	80% FED 20% STATE	80% FED 20% STATE	80% FED 20% STATE	80% FED 20% STATE	HSIP 90% FED 10% STATE	100% LOCAL ROLLING MEADOWS	100% LOCAL ROLLING MEADOWS	100% LOCAL ARLINGTON HEIGHTS	100% LOCAL PALATINE	100% LOCAL ARLINGTON HEIGHTS
				URBAN	URBAN	URBAN	URBAN	URBAN	URBAN	URBAN	URBAN	URBAN	URBAN	URBAN
550A0810	STORM SEWERS, CLASS A, TYPE 3 66"	FOOT	335	335										
550A4740	STORM SEWERS, CLASS A, TYPE 1 EQUIVALENT ROUND-SIZE 66"	FOOT	56	56										
550A5530	STORM SEWERS, CLASS A, TYPE 2 EQUIVALENT ROUND-SIZE 60"	FOOT	103	103										
55100500	STORM SEWER REMOVAL 12"	FOOT	436	436										
55100700	STORM SEWER REMOVAL 15"	FOOT	18	18										
55100900	STORM SEWER REMOVAL 18"	FOOT	21	21										
55101200	STORM SEWER REMOVAL 24"	FOOT	70	70										
55101600	STORM SEWER REMOVAL 36"	FOOT	1,123	1,123										
55101800	STORM SEWER REMOVAL 42"	FOOT	18	18										
55101900	STORM SEWER REMOVAL 48"	FOOT	33	33										
55201900	STORM SEWERS JACKED IN PLACE, 66"	FOOT	98	98										
56103300	DUCTILE IRON WATER MAIN 12"	FOOT	40											40
+ ~~56104100~~	~~DUCTILE IRON WATER MAIN, MECHANICAL JOINT 12"~~	~~FOOT~~	~~40~~	~~40~~										
56103520	DUCTILE IRON WATER MAIN 24"	FOOT	54											54
+ ~~56104320~~	~~DUCTILE IRON WATER MAIN, MECHANICAL JOINT 24"~~	~~FOOT~~	~~54~~	~~54~~										
58600101	GRANULAR BACKFILL FOR STRUCTURES	CU YD	4,302		2,563	1,739								
58700300	CONCRETE SEALER	SQ FT	15,582		15,582									

1

+ INDICATES SPECIALTY ITEM

MODEL: Default
FILE NAME: S:\JOB\6300-639963461\13D\drawings\CAD\Microstation\Sheets\2-D\001.dgn

STRAND ASSOCIATES®
1170 SOUTH HOUBOLT ROAD
JOLIET, ILLINOIS 60431
(815) 744-4200

USER NAME = StevenB	DESIGNED - MAG	REVISED -	
	DRAWN - DJW	REVISED -	
PLOT SCALE = 2.0000 ' / in.	CHECKED - DWG	REVISED -	
PLOT DATE = 1/24/2025	DATE - 12/13/24	REVISED -	

STATE OF ILLINOIS
DEPARTMENT OF TRANSPORTATION

SUMMARY OF QUANTITIES

SCALE: | SHEET 11 OF 35 SHEETS | STA. TO STA.

F.A.P. RTE.	SECTION	COUNTY	TOTAL SHEETS	SHEET NO.
342	2018-100-BR	COOK	1351	15
		CONTRACT NO. 62N91		
		ILLINOIS FED. AID PROJECT		

1 REV. 2/25/25

CODE NO.	ITEM	UNIT	TOTAL QUANTITY	ROADWAY 0004	STRUCTURE REHABILITATION 0013	R-WALL IL RTE 62 SN016-W2501 0044	R-WALL US RTE 12 SN016-W2503 0044	ITS LIGHTING 0021	TRAFFIC SIGNALS 0021	AESTHETIC IMPROVEMENTS 0031	EVP 0021	EVP 0021	EVP 0021	ARLINGTON HEIGHTS SIGN RELOCATION 0004
				80% FED 20% STATE	80% FED 20% STATE	80% FED 20% STATE	80% FED 20% STATE	80% FED 20% STATE	HSIP 90% FED 10% STATE	100% LOCAL ROLLING MEADOWS	100% LOCAL ROLLING MEADOWS	100% LOCAL ARLINGTON HEIGHTS	100% LOCAL PALATINE	100% LOCAL ARLINGTON HEIGHTS
				URBAN	URBAN	URBAN	URBAN	URBAN	URBAN	URBAN	URBAN	URBAN	URBAN	URBAN
59000200	EPOXY CRACK INJECTION	FOOT	497		497									
59100100	GEOCOMPOSITE WALL DRAIN	SQ YD	1,726		1,335	262	129							
59300100	CONTROLLED LOW-STRENGTH MATERIAL	CU YD	2,635	2,635										
60100060	CONCRETE HEADWALLS FOR PIPE DRAINS	EACH	14	14										
			629	629										
60100945	PIPE DRAINS 12"	FOOT	~~566~~	~~566~~										
60108200	PIPE UNDERDRAINS 6" (SPECIAL)	FOOT	44	44										
60108206	PIPE UNDERDRAINS, TYPE 2, 6"	FOOT	6,048	6,048										
60146304	PIPE UNDERDRAINS FOR STRUCTURES 4"	FOOT	2,233		1,467	375	391							
60146305	PIPE UNDERDRAINS FOR STRUCTURES (SPECIAL) 4"	FOOT	360	360										
60221100	MANHOLES, TYPE A, 5'-DIAMETER, TYPE 1 FRAME, CLOSED LID	EACH	1	1										
60223800	MANHOLES, TYPE A, 6'-DIAMETER, TYPE 1 FRAME, CLOSED LID	EACH	4	4										
60224446	MANHOLES, TYPE A, 7'-DIAMETER, TYPE 1 FRAME, CLOSED LID	EACH	6	6										
60224459	MANHOLES, TYPE A, 8'-DIAMETER, TYPE 1 FRAME, CLOSED LID	EACH	3	3										
60224469	MANHOLES, TYPE A, 9'-DIAMETER, TYPE 1 FRAME, CLOSED LID	EACH	12	12										
60255500	MANHOLES TO BE ADJUSTED	EACH	1	1										
60260100	INLETS TO BE ADJUSTED	EACH	1	1										
60265700	VALVE VAULTS TO BE ADJUSTED	EACH	1	1										

+ INDICATES SPECIALTY ITEM

1 REV. 2/25/25

STRAND ASSOCIATES®
1170 SOUTH HOUBOLT ROAD
JOLIET, ILLINOIS 60431
(815) 744-4200

USER NAME = StevenB	DESIGNED - MAG	REVISED -	
	DRAWN - DJW	REVISED -	
PLOT SCALE = 2.0000 ' / in.	CHECKED - DWG	REVISED -	
PLOT DATE = 1/24/2025	DATE - 12/13/24	REVISED -	

STATE OF ILLINOIS
DEPARTMENT OF TRANSPORTATION

SUMMARY OF QUANTITIES

SCALE: | SHEET 12 OF 35 SHEETS | STA. TO STA.

F.A.P. RTE.	SECTION	COUNTY	TOTAL SHEETS	SHEET NO.
342	2018-100-BR	COOK	1351	16

CONTRACT NO. 62N91

ILLINOIS | FED. AID PROJECT

MODEL: Default
FILE NAME: S:\OL6300--639\9634\113\Drawings\CAD\Micros-SSA\CAD_Sheets\C2-D162N91-sht-SOQ-SAI.dgn

CODE NO.	ITEM	UNIT	TOTAL QUANTITY	ROADWAY 0004	STRUCTURE REHABILITATION 0013	R-WALL IL RTE 62 SN016-W2501 0044	R-WALL US RTE 12 SN016-W2503 0044	ITS LIGHTING 0021	TRAFFIC SIGNALS 0021	AESTHETIC IMPROVEMENTS 0031	EVP 0021	EVP 0021	EVP 0021	ARLINGTON HEIGHTS SIGN RELOCATION 0004
				80% FED 20% STATE	80% FED 20% STATE	80% FED 20% STATE	80% FED 20% STATE	80% FED 20% STATE	HSIP 90% FED 10% STATE	100% LOCAL ROLLING MEADOWS	100% LOCAL ROLLING MEADOWS	100% LOCAL ARLINGTON HEIGHTS	100% LOCAL PALATINE	100% LOCAL ARLINGTON HEIGHTS
				URBAN	URBAN	URBAN	URBAN	URBAN	URBAN	URBAN	URBAN	URBAN	URBAN	URBAN
63700805	CONCRETE BARRIER TRANSITION	FOOT	220	220										
63700900	CONCRETE BARRIER BASE	FOOT	3,461	3,461										
63800920	MODULAR GLARE SCREEN SYSTEM, TEMPORARY	FOOT	3,100	3,100										
64200116	SHOULDER RUMBLE STRIPS, 16 INCH	FOOT	45,559	45,559										
64300240	IMPACT ATTENUATORS (FULLY REDIRECTIVE, NARROW), TEST LEVEL 2	EACH	4	4										
66201120	CONCRETE SHOULDER CURB	FOOT	319	319										
66400105	CHAIN LINK FENCE, 4'	FOOT	1,531	1,531										
+ 66900200	NON-SPECIAL WASTE DISPOSAL	CU YD	42,480	42,480	1									
+ 66900530	SOIL DISPOSAL ANALYSIS	EACH	12	12										
+ 66901001	REGULATED SUBSTANCES PRE-CONSTRUCTION PLAN	L SUM	1	1										
+ 66901003	REGULATED SUBSTANCES FINAL CONSTRUCTION REPORT	L SUM	1	1										
66901005	ENGINEERED BARRIER	SQ YD	1,360	1,360	1									
+ 66901006	REGULATED SUBSTANCES MONITORING	CAL DA	200	200										
67100100	MOBILIZATION	L SUM	1	1										
70107025	CHANGEABLE MESSAGE SIGN	CAL DA	504	504										
70200100	NIGHTTIME WORK ZONE LIGHTING	L SUM	1	1										

+ INDICATES SPECIALTY ITEM

	CODE NO.	ITEM	UNIT	TOTAL QUANTITY	ROADWAY 0004	STRUCTURE REHABILITATION 0013	R-WALL IL RTE 62 SN016-W2501 0044	R-WALL US RTE 12 SN016-W2503 0044	ITS LIGHTING 0021	TRAFFIC SIGNALS 0021	AESTHETIC IMPROVEMENTS 0031	EVP 0021	EVP 0021	EVP 0021	ARLINGTON HEIGHTS SIGN RELOCATION 0004
					80% FED 20% STATE	80% FED 20% STATE	80% FED 20% STATE	80% FED 20% STATE	80% FED 20% STATE	HSIP 90% FED 10% STATE	100% LOCAL ROLLING MEADOWS	100% LOCAL ROLLING MEADOWS	100% LOCAL ARLINGTON HEIGHTS	100% LOCAL PALATINE	100% LOCAL ARLINGTON HEIGHTS
					URBAN	URBAN	URBAN	URBAN	URBAN	URBAN	URBAN	URBAN	URBAN	URBAN	URBAN
+	81400100	HANDHOLE	EACH	5						5					
+	81400200	HEAVY-DUTY HANDHOLE	EACH	36					14	22					
+	81400300	DOUBLE HANDHOLE	EACH	1						1					
+	81603081	UNIT DUCT, 600V, 3-1C NO.2, 1/C NO.4 GROUND, (XLP-TYPE USE), 1 1/2" DIA. POLYETHYLENE	FOOT	3,307					3,307						
+	81603095	UNIT DUCT, 600V, 4-1C NO.2, 1/C NO.4 GROUND, (XLP-TYPE USE), 1 1/2" DIA. POLYETHYLENE	FOOT	5,512					5,512						
+	81702110	ELECTRIC CABLE IN CONDUIT, 600V (XLP-TYPE USE) 1/C NO. 10	FOOT	9,101					9,101						
+	81702120	ELECTRIC CABLE IN CONDUIT, 600V (XLP-TYPE USE) 1/C NO. 8	FOOT	1,460					1,460	1					
+	81702130	ELECTRIC CABLE IN CONDUIT, 600V (XLP-TYPE USE) 1/C NO. 6	FOOT	5,370					5,370						
+	81702140	ELECTRIC CABLE IN CONDUIT, 600V (XLP-TYPE USE) 1/C NO. 4	FOOT	14,505					14,505						
+	81702150	ELECTRIC CABLE IN CONDUIT, 600V (XLP-TYPE USE) 1/C NO. 2	FOOT	24,102					24,102						
+	81800300	AERIAL CABLE, 3-1/C NO. 2 WITH MESSENGER WIRE	FOOT	2,119					2,119						
+	81800400	AERIAL CABLE, 4-1/C NO. 2 WITH MESSENGER WIRE	FOOT	4,547					4,547						
+	82110008	LUMINAIRE, LED, ROADWAY, OUTPUT DESIGNATION H	EACH	104					104						
+	82110026	LUMINAIRE, LED, UNDERPASS, SUSPENDED, OUTPUT DESIGNATION D	EACH	10					10						
+	82110027	LUMINAIRE, LED, UNDERPASS, SUSPENDED, OUTPUT DESIGNATION E	EACH	46					46						

+ INDICATES SPECIALTY ITEM

MODEL: Default
FILE NAME: S:\OL\6300--639\9634\113\Drawings\CAD\Micros-SS4\CAD_Sheets\C2-D162N91-sht-SOQ-SAI.dgn

STRAND ASSOCIATES®
1170 SOUTH HOUBOLT ROAD
JOLIET, ILLINOIS 60431
(815) 744-4200

USER NAME = StevenB	DESIGNED - MAG	REVISED -	
	DRAWN - DJW	REVISED -	
PLOT SCALE = 2.0000 ' / in.	CHECKED - DWG	REVISED -	
PLOT DATE = 1/24/2025	DATE - 12/13/24	REVISED -	

STATE OF ILLINOIS
DEPARTMENT OF TRANSPORTATION

SUMMARY OF QUANTITIES

SCALE: | SHEET 21 OF 35 SHEETS | STA. TO STA.

F.A.P. RTE.	SECTION	COUNTY	TOTAL SHEETS	SHEET NO.
342	2018-100-BR	COOK	1351	25
		CONTRACT NO. 62N91		
		ILLINOIS FED. AID PROJECT		

1 REV. 2/25/25

CODE NO.	ITEM	UNIT	TOTAL QUANTITY	ROADWAY 0004	STRUCTURE REHABILITATION 0013	R-WALL IL RTE 62 SN016-W2501 0044	R-WALL US RTE 12 SN016-W2503 0044	ITS LIGHTING 0021	TRAFFIC SIGNALS 0021	AESTHETIC IMPROVEMENTS 0031	EVP 0021	EVP 0021	EVP 0021	ARLINGTON HEIGHTS SIGN RELOCATION 0004
				80% FED 20% STATE	80% FED 20% STATE	80% FED 20% STATE	80% FED 20% STATE	80% FED 20% STATE	HSIP 90% FED 10% STATE	100% LOCAL ROLLING MEADOWS	100% LOCAL ROLLING MEADOWS	100% LOCAL ARLINGTON HEIGHTS	100% LOCAL PALATINE	100% LOCAL ARLINGTON HEIGHTS
				URBAN	URBAN	URBAN	URBAN	URBAN	URBAN	URBAN	URBAN	URBAN	URBAN	URBAN
X5610712	WATER MAIN REMOVAL, 12"	FOOT	40	~~40~~										40 1
X5610724	WATER MAIN REMOVAL, 24"	FOOT	54	~~54~~										54
X5610752	WATER MAIN LINE STOP 12"	EACH	1	~~1~~										1
X5610764	WATER MAIN LINE STOP 24"	EACH	2	~~2~~										2
X5610804	NON-PRESSURE CONNECTION TO EXISTING WATER MAIN	EACH	4	~~4~~										4
X6050700	REMOVE INLET BOX	EACH	8	8										
X6063000	CONCRETE GUTTER, TYPE B (SPECIAL)	FOOT	715			396	319							
X6370050	CONCRETE BARRIER WALL (SPECIAL)	FOOT	120	120										
X6420100	SHOULDER RUMBLE STRIP REMOVAL	SQ YD	4,715	4,715										
X6430120	REMOVE IMPACT ATTENUATORS, NO SALVAGE	EACH	1	1										
X6640104	FENCE REMOVAL	FOOT	485	289	196									
X6700407	ENGINEER'S FIELD OFFICE, TYPE A (D1)	CAL MO	24	24										
X7010118	TEMPORARY RUMBLE STRIPS (SPECIAL)	EACH	18	18										
X7010216	TRAFFIC CONTROL AND PROTECTION, (SPECIAL)	L SUM	1	1										
X7011015	TRAFFIC CONTROL AND PROTECTION (EXPRESSWAYS)	L SUM	1	1										

+ INDICATES SPECIALTY ITEM

STRAND ASSOCIATES®
1170 SOUTH HOUBOLT ROAD
JOLIET, ILLINOIS 60431
(815) 744-4200

USER NAME = StevenB	DESIGNED - MAG	REVISED -
	DRAWN - DJW	REVISED -
PLOT SCALE = 2.0000 ' / in.	CHECKED - DWG	REVISED -
PLOT DATE = 1/24/2025	DATE - 12/13/24	REVISED -

STATE OF ILLINOIS
DEPARTMENT OF TRANSPORTATION

SUMMARY OF QUANTITIES

SCALE: SHEET 30 OF 35 SHEETS STA. TO STA.

F.A.P. RTE.	SECTION	COUNTY	TOTAL SHEETS	SHEET NO.
342	2018-100-BR	COOK	1351	34

CONTRACT NO. 62N91

ILLINOIS FED. AID PROJECT

1 REV. 2/25/25

MODEL: Default
FILE NAME: S:\OL6300-639\9634\113\Drawings\CAD\Micros-SSA\CAD_Sheets\C2-D162N91-sht-SOQ-SAI.dgn

	CODE NO.	ITEM	UNIT	TOTAL QUANTITY	ROADWAY 0004	STRUCTURE REHABILITATION 0013	R-WALL IL RTE 62 SN016-W2501 0044	R-WALL US RTE 12 SN016-W2503 0044	ITS LIGHTING 0021	TRAFFIC SIGNALS 0021	AESTHETIC IMPROVEMENTS 0031	EVP 0021	EVP 0021	EVP 0021	ARLINGTON HEIGHTS SIGN RELOCATION 0004
					80% FED 20% STATE	80% FED 20% STATE	80% FED 20% STATE	80% FED 20% STATE	80% FED 20% STATE	HSIP 90% FED 10% STATE	100% LOCAL ROLLING MEADOWS	100% LOCAL ROLLING MEADOWS	100% LOCAL ARLINGTON HEIGHTS	100% LOCAL PALATINE	100% LOCAL ARLINGTON HEIGHTS
					URBAN	URBAN	URBAN	URBAN	URBAN	URBAN	URBAN	URBAN	URBAN	URBAN	URBAN
+	X8760200	ACCESSIBLE PEDESTRIAN SIGNALS	EACH	6						6					
+	X8780012	CONCRETE FOUNDATION, TYPE A 12-INCH DIAMETER	FOOT	16						16					
+	X8780200	CONCRETE FOUNDATION, SURVEILLANCE CABINET MODEL 334	EACH	8					8	1					
+	X8809005	LED SIGNAL FACE, LENS COVER	EACH	108						108					
+	X8870510	CONFIRMATION BEACON	EACH	6								6			
+	X8950425	REMOVE EXISTING TRAFFIC SURVEILLANCE EQUIPMENT	L SUM	1					1						
	XZ054500	ROCK FILL (SPECIAL)	CU YD	212.8	27.8		185.0								
	Z0004552	APPROACH SLAB REMOVAL	SQ YD	6,151	6,151										
☐	X5230150	CLEANING DRAINAGE SYSTEM	FOOT	33,734	33,734										
	Z0012754	STRUCTURAL REPAIR OF CONCRETE (DEPTH EQUAL TO OR LESS THAN 5 INCHES)	SQ FT	1,235		1,235									
	Z0012755	STRUCTURAL REPAIR OF CONCRETE (DEPTH GREATER THAN 5 INCHES)	SQ FT	12		12									
	Z0013798	CONSTRUCTION LAYOUT	L SUM	1	1										
	Z0018400	DRAINAGE STRUCTURES TO BE ADJUSTED	EACH	10	10										
☐	Z0018500	DRAINAGE STRUCTURES TO BE CLEANED	EACH	284	284										
	Z0018700	DRAINAGE STRUCTURE TO BE REMOVED	EACH	1	1										

+ INDICATES SPECIALTY ITEM

☐ NON-PART 100% STATE

1 REV. 2/25/25

STRAND ASSOCIATES®
1170 SOUTH HOUBOLT ROAD
JOLIET, ILLINOIS 60431
(815) 744-4200

USER NAME = StevenB	DESIGNED - MAG	REVISED -
	DRAWN - DJW	REVISED -
PLOT SCALE = 2.0000 ' / in.	CHECKED - DWG	REVISED -
PLOT DATE = 1/24/2025	DATE - 12/13/24	REVISED -

STATE OF ILLINOIS
DEPARTMENT OF TRANSPORTATION

SUMMARY OF QUANTITIES

SCALE: | SHEET 33 OF 35 SHEETS | STA. TO STA.

F.A.P. RTE.	SECTION	COUNTY	TOTAL SHEETS	SHEET NO.
342	2018-100-BR	COOK	1351	37

CONTRACT NO. 62N91

ILLINOIS | FED. AID PROJECT

MODEL: Default
FILE NAME: S:\OL\6300--639\9634\113\Drawings\CAD\Micross\SSA\CAD_Sheets\C2-D162N91-sht-SQO-SAI.dgn

	CODE NO.	ITEM	UNIT	TOTAL QUANTITY	ROADWAY 0004	STRUCTURE REHABILITATION 0013	R-WALL IL RTE 62 SN016-W2501 0044	R-WALL US RTE 12 SN016-W2503 0044	ITS LIGHTING 0021	TRAFFIC SIGNALS 0021	AESTHETIC IMPROVEMENTS 0031	EVP 0021	EVP 0021	EVP 0021	ARLINGTON HEIGHTS SIGN RELOCATION 0004
					80% FED 20% STATE	80% FED 20% STATE	80% FED 20% STATE	80% FED 20% STATE	80% FED 20% STATE	HSIP 90% FED 10% STATE	100% LOCAL ROLLING MEADOWS	100% LOCAL ROLLING MEADOWS	100% LOCAL ARLINGTON HEIGHTS	100% LOCAL PALATINE	100% LOCAL ARLINGTON HEIGHTS
					URBAN	URBAN	URBAN	URBAN	URBAN	URBAN	URBAN	URBAN	URBAN	URBAN	URBAN
	Z0029090	DIAMOND GRINDING (BRIDGE SECTION)	SQ YD	11,175		11,175									
+	X7200061	TEMPORARY INFORMATION SIGNING	SQ FT	831	831										
+	Z0033020	LUMINAIRE SAFETY CABLE ASSEMBLY	EACH	443					443						
+	X8000003	MAINTENANCE OF LIGHTING SYSTEM	CAL MO	9					9						
+	Z0033044	RE-OPTIMIZE TRAFFIC SIGNAL SYSTEM LEVEL 1	EACH	2						2					
+	Z0033052	COMMUNICATIONS VAULT	EACH	20					20						
	Z0043900	PREFORMED JOINT FILLER	FOOT	386		386									
	~~Z0056610~~	~~STORM SEWER (WATER MAIN REQUIREMENTS) 15 INCH~~	~~FOOT~~	~~7~~	~~7~~										
	Z0056626	STORM SEWER (WATER MAIN REQUIREMENTS) 48 INCH	FOOT	40	12										28
	Z0062456	TEMPORARY PAVEMENT	SQ YD	2,506	2,506										
	Z0065700	SLOPE WALL REPAIR	SQ YD	139		139									
+	Z0073510	TEMPORARY TRAFFIC SIGNAL TIMING	EACH	18	12					6					
Ø	Z0076600	TRAINEES	HOUR	1,500	1,500										
Ø	Z0076604	TRAINEES TRAINING PROGRAM GRADUATE	HOUR	1,500	1,500										

1

+ INDICATES SPECIALTY ITEM

Ø 0042

MODEL: Default
FILE NAME: S:\OL\6300--639\9634\113\Drawings\CAD\Microsoft\CAD_Sheets\C2-D162N91-sht-SOQ-SAI.dgn

STRAND ASSOCIATES®
1170 SOUTH HOUBOLT ROAD
JOLIET, ILLINOIS 60431
(815) 744-4200

USER NAME = StevenB	DESIGNED - MAG	REVISED -	
	DRAWN - DJW	REVISED -	
PLOT SCALE = 2.0000 ' / in.	CHECKED - DWG	REVISED -	
PLOT DATE = 1/24/2025	DATE - 12/13/24	REVISED -	

STATE OF ILLINOIS
DEPARTMENT OF TRANSPORTATION

SUMMARY OF QUANTITIES

SCALE: SHEET 34 OF 35 SHEETS STA. TO STA.

F.A.P. RTE.	SECTION	COUNTY	TOTAL SHEETS	SHEET NO.
342	2018-100-BR	COOK	1351	38
		CONTRACT NO. 62N91		
		ILLINOIS FED. AID PROJECT		

1 REV. 2/25/25 REV-SEP

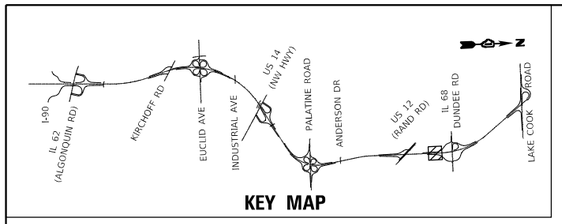

KEY MAP

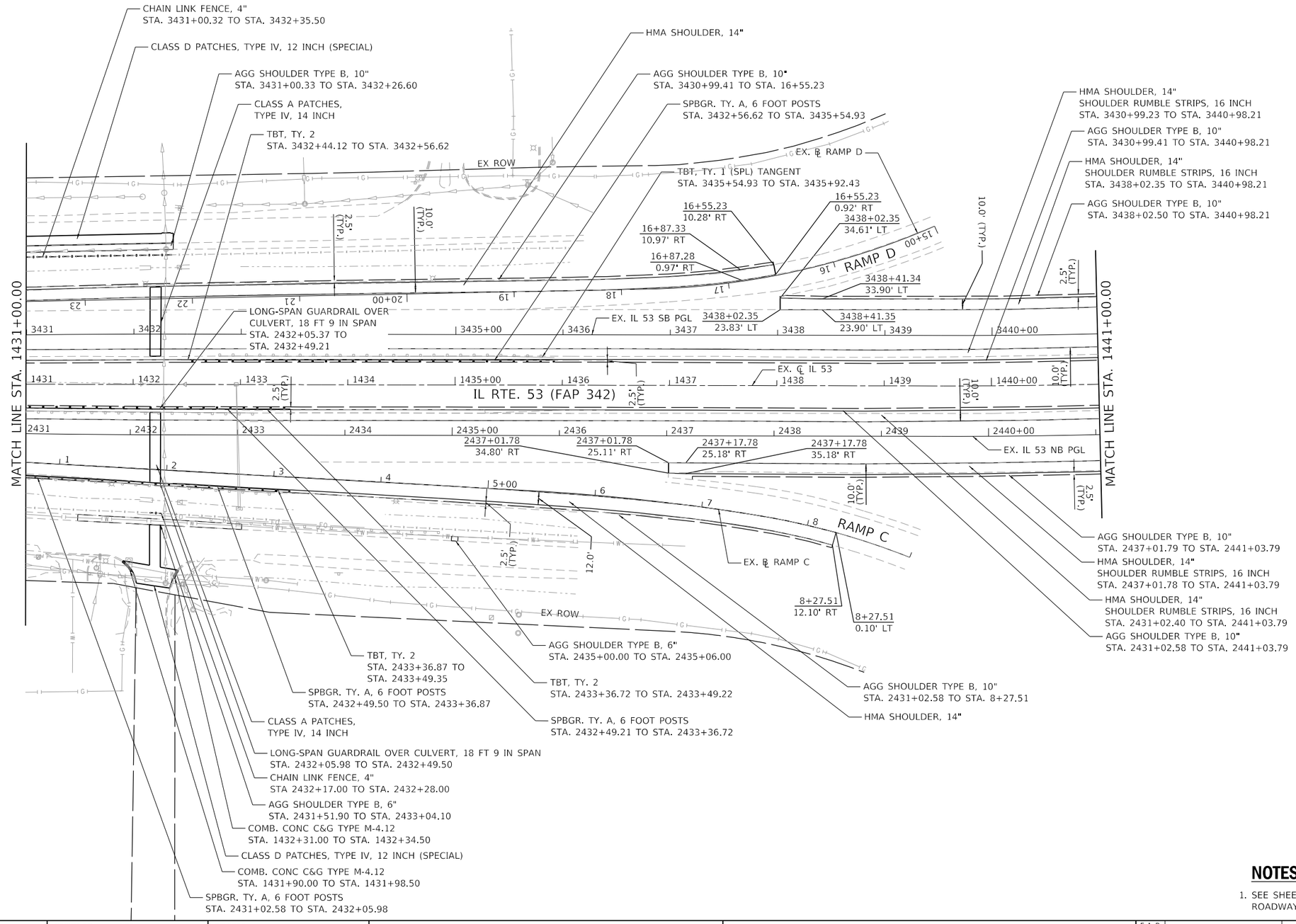

NOTES:

1. SEE SHEETS 142 TO 158 FOR ROADWAY RESURFACING PLAN.

STRAND ASSOCIATES®
1170 SOUTH HOUBOLT ROAD
JOLIET, ILLINOIS 60431
(815) 744-4200

USER NAME = jackd	DESIGNED - SRB	REVISED -	
	DRAWN - DJW	REVISED -	
PLOT SCALE = 100.0000 ' / in.	CHECKED - MAG	REVISED -	
PLOT DATE = 2/25/2025	DATE - 12/13/24	REVISED -	

STATE OF ILLINOIS
DEPARTMENT OF TRANSPORTATION

IL ROUTE 53
ROADWAY PLAN

SCALE: 1" = 50' | SHEET 11 OF 22 SHEETS | STA. 1431+00.00 TO STA. 1441+00.00

F.A.P. RTE.	SECTION	COUNTY	TOTAL SHEETS	SHEET NO.
342	2018-100-BR	COOK	1351	125
		CONTRACT NO. 62N91		
		ILLINOIS	FED. AID PROJECT	

1 REVISED ENTIRE SHEET 2/25/25

MODEL: Default
FILE NAME: S:\OL\6300-639\96346\113\Drawings\CAD\Micros\SSA\CAD_Sheets\C2-D162N91-sht-roydhn-274L53-SAL.dgn

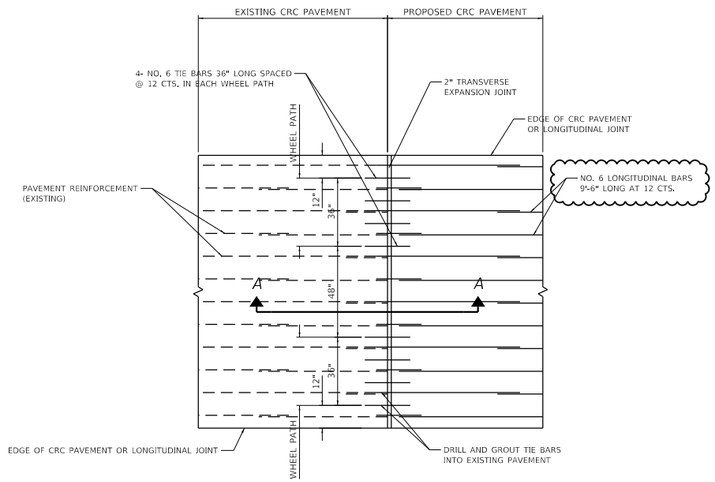

CONNECTION TO EXISTING PAVEMENT
PLAN VIEW (SINGLE LANE WIDTH SHOWN)

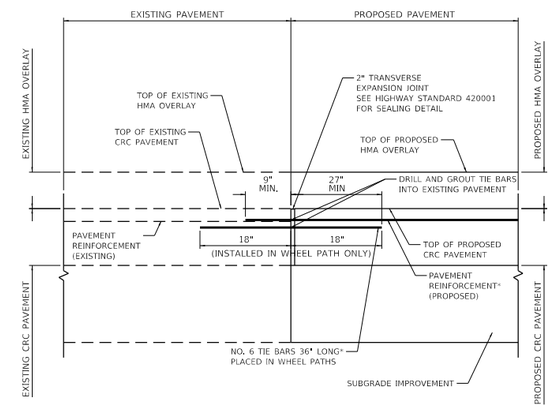

*PLACE ALL PROPOSED REINFORCING STEEL AT THE SAME PLANE

CONNECTION TO EXISTING PAVEMENT
SECTION A-A

NOTES:

1. THIS DETAIL SHOWS THE CONNECTION OF PROPOSED CRC PAVEMENT TO AN EXISTING CRC PAVEMENT SECTION.
2. CONNECTION TO THE EXISTING CRC PAVEMENT INCLUDES INSTALLATION OF LONGITUDINAL BARS TO BE DRILLED AND GROUTED. THIS WORK WILL NOT BE PAID FOR SEPARATELY BUT INCLUDED IN THE COST OF CONTINUOUSLY REINFORCED PORTLAND CEMENT CONCRETE PAVEMENT OF THE THICKNESS SPECIFIED.
3. THE ADDITIONAL DEFORMED BARS (36" CTRS.) PLACED IN THE WHEEL PATHS AND THE TRANSVERSE EXPANSION JOINT SHALL NOT BE PAID FOR SEPARATELY BUT INCLUDED IN THE COST OF CONTINUOUSLY REINFORCED PORTLAND CEMENT CONCRETE PAVEMENT OF THE THICKNESS SPECIFIED.
4. SEE STANDARD 4210013 FOR DETAILS OF PAVEMENT REINFORCEMENT. ALL REINFORCEMENT BARS SHALL BE LAPPED AND TIED PER THE STANDARD.
5. SEE STANDARD 421206 FOR DETAILS OF 36' CRC PAVEMENT.

SEQUENCE OF CONSTRUCTION - IL 53

STAGE 2 - NORTH SEGMENT MAINLINE

8. MAINTAIN TWO NORTHBOUND LANES AND TWO SOUTHBOUND LANES ON THE OUTSIDE LANES/ SHOULDERS FROM THE PREVIOUS STAGE.

9. REMOVE AND CONSTRUCT NORTHBOUND AND SOUTHBOUND INSIDE LANES/ SHOULDERS OF THE RAND ROAD BRIDGE AND THE PAVEMENT WITHIN THE RECONSTRUCTION LIMITS. REMOVE AND CONSTRUCT CONCRETE MEDIAN BARRIER.

10. MILL AND RESURFACE THE NORTHBOUND AND SOUTHBOUND INSIDE LANES/SHOULDERS FROM NORTH OF THE RAND ROAD BRIDGE PAVEMENT RECONSTRUCTION LIMITS TO THE LAKE COOK ROAD RESURFACING LIMITS. NIGHTTIME LANE CLOSURE SHALL BE USED TO MILL AND RESURFACE THE NORTHBOUND PERMANENT MIDDLE LANE.

11. AFTER STAGE 2 IS COMPLETED, INSTALL TEMPORARY AND PERMANENT PAVEMENT MARKINGS AND SHOULDER RUMBLE STRIPS ALONG NORTHBOUND AND SOUTHBOUND LANES FROM SOUTH OF RAND ROAD BRIDGE TO LAKE COOK ROAD UTILIZING APPLICABLE IDOT HIGHWAY STANDARDS.

STAGE 2 - SOUTHBOUND ON RAMP AT RAND ROAD, EASTBOUND TO SOUTHBOUND ON RAMP AT DUNDEE ROAD, EASTBOUND TO SOUTHBOUND ON RAMP AT LAKE COOK ROAD.

1. THE RAMPS SHALL BE CLOSED USING APPLICABLE IDOT HIGHWAY STANDARDS DURING NIGHTTIME HOURS.

2. INSTALL PAVEMENT PATCHES AND MILL AND RESURFACE THE RAMP AND SHOULDERS PER RESURFACING PLANS.

3. INSTALL PERMANENT PAVEMENT MARKINGS. REOPEN THE RAMPS AFTER THE MILL AND RESURFACE HAS BEEN COMPLETED.

WINTER SHUTDOWN - SOUTH AND NORTH SEGMENT

1. REMOVE WORK ZONE SIGNS FROM PREVIOUS STAGE. MAINTAIN EXISTING SIGNS.

2. REMOVE PAVEMENT MARKINGS AND RAISED PAVEMENT MARKER REFLECTORS THAT MAY CONFLICT WITH THE PROPOSED TRAFFIC CONTROL PLAN.

3. INSTALL TEMPORARY PAVEMENT MARKINGS AND TEMPORARY RAISED PAVEMENT MARKERS IN ACCORDANCE WITH PERMANENT PAVEMENT MARKING PLAN.

4. SOUTH SEGMENT: MAINTAIN THREE TO TWO NORTHBOUND LANES IN THE LOCAL LANES. THREE SOUTHBOUND LANES SHALL BE PROVIDED ON THE EXISTING SOUTHBOUND LOCAL LANES. MAINTAIN THREE EXPRESS NORTHBOUND AND SOUTHBOUND LANES.

5. NORTH SEGMENT: MAINTAIN THREE NORTHBOUND LANES AND THREE SOUTHBOUND LANES.

STAGE 3 - SOUTH SEGMENT MAINLINE

1. REMOVE AND RELOCATE OR COVER ANY CONFLICTING EXISTING SIGNS.

2. REMOVE PAVEMENT MARKINGS AND RAISED PAVEMENT MARKER REFLECTORS THAT MAY CONFLICT WITH THE STAGE 3 TRAFFIC CONTROL PLAN.

3. INSTALL TEMPORARY PAVEMENT MARKINGS, TEMPORARY RAISED PAVEMENT MARKERS, TEMPORARY CONCRETE BARRIER, AND ATTENUATORS PER STAGE 3 TRAFFIC CONTROL PLAN.

4. TWO NORTHBOUND AND TWO SOUTHBOUND EXPRESS LANES SHALL BE PROVIDED ON THE INSIDE NORTHBOUND AND SOUTHBOUND LANES/SHOULDERS.

   THREE OR TWO NORTHBOUND AND SOUTHBOUND LOCAL LANES SHALL BE PROVIDED ON THE PROPOSED LANES FROM THE PREVIOUS STAGE.

5. REMOVE TEMPORARY RAMP (SPECIAL) ALONG NORTHBOUND AND SOUTHBOUND EXPRESS LANES. REMOVE TEMPORARY PAVEMENT AND CONSTRUCT LOCAL/EXPRESS CONCRETE MEDIAN BARRIER AND OVERHEAD SIGNS WITHIN ALGONQUIN ROAD RECONSTRUCTION LIMITS.

   REMOVE AND CONSTRUCT NORTHBOUND AND SOUTHBOUND EXPRESS OUTSIDE LANES/SHOULDERS OF THE ALGONQUIN ROAD BRIDGE AND SALT CREEK BRIDGE DECKS.

   REMOVE AND RECONSTRUCT THE NORTHBOUND AND SOUTHBOUND OUTSIDE LANES WITHIN THE PAVEMENT RECONSTRUCTION LIMITS.

6. MILL AND RESURFACE THE NORTHBOUND AND SOUTHBOUND EXPRESS OUTSIDE LANES/SHOULDERS FROM NORTH OF THE ALGONQUIN ROAD BRIDGE PAVEMENT RECONSTRUCTION LIMITS TO SOUTH OF THE SALT CREEK BRIDGE PAVEMENT RECONSTRUCTION LIMITS.

SEQUENCE OF CONSTRUCTION - IL 53

STAGE 4 - SOUTH SEGMENT MAINLINE

1. REMOVE AND RELOCATE OR COVER ANY CONFLICTING EXISTING SIGNS.

2. INSTALL TEMPORARY PAVEMENT MARKINGS, TEMPORARY RAISED PAVEMENT MARKERS, TEMPORARY CONCRETE BARRIER, AND ATTENUATORS PER STAGE 4 TRAFFIC CONTROL PLAN.

3. TWO NORTHBOUND AND TWO SOUTHBOUND EXPRESS LANES SHALL BE PROVIDED ON THE OUTSIDE NORTHBOUND AND SOUTHBOUND LANES/SHOULDERS FROM THE PREVIOUS STAGE.

   THREE OR TWO NORTHBOUND AND SOUTHBOUND LOCAL LANES SHALL BE PROVIDED ON THE PROPOSED LANES FROM THE PREVIOUS STAGE.

4. REMOVE AND CONSTRUCT NORTHBOUND AND SOUTHBOUND EXPRESS INSIDE LANES/SHOULDERS OF THE ALGONQUIN ROAD BRIDGE AND SALT CREEK BRIDGE DECKS AND PAVEMENT WITHIN THE RECONSTRUCTION LIMITS. REMOVE AND CONSTRUCT THE MEDIAN BARRIER BETWEEN THE EXPRESS LANES.

5. MILL AND RESURFACE THE SOUTHBOUND EXPRESS INSIDE LANES/SHOULDERS FROM NORTH OF THE ALGONQUIN ROAD BRIDGE PAVEMENT RECONSTRUCTION LIMITS TO SOUTH OF THE SALT CREEK BRIDGE PAVEMENT RECONSTRUCTION LIMITS.

FINAL - SOUTH AND NORTH SEGMENT

1. REMOVE TEMPORARY TURNAROUND AND COMPLETE LANDSCAPING RESTORATION PER APPLICABLE IDOT HIGHWAY STANDARDS.

2. INSTALL PERMANENT PAVEMENT MARKINGS ALONG NORTHBOUND AND SOUTHBOUND EXPRESS LANES FROM ALGONQUIN ROAD BRIDGE TO SALT CREEK BRIDGE UTILIZING APPLICABLE IDOT HIGHWAY STANDARDS.

3. CONSTRUCT PERMANENT RUMBLE STRIPS ALONG NORTHBOUND AND SOUTHBOUND EXPRESS AND LOCALS LANES PER APPLICABLE IDOT HIGHWAY STANDARDS.

4. REMOVE AND CONSTRUCT REMAINING PERMANENT SIGN STRUCTURES PER PLANS UTILIZING APPLICABLE IDOT HIGHWAY STANDARDS.

SEQUENCE OF CONSTRUCTION - ALGONQUIN ROAD

STAGE 1

1. REMOVE AND RELOCATE OR COVER ANY CONFLICTING EXISTING SIGNS.

2. REMOVE PAVEMENT MARKINGS AND RAISED PAVEMENT MARKER REFLECTORS THAT MAY CONFLICT WITH THE PROPOSED TRAFFIC CONTROL PLANS.

3. INSTALL TEMPORARY PAVEMENT MARKINGS, TEMPORARY CONCRETE BARRIER, SIGNS, AND WORK ZONE SIGNS PER STAGE 1 TRAFFIC CONTROL PLAN.

4. CLOSE EASTBOUND AND WESTBOUND OUTSIDE LANES OF ALGONQUIN ROAD. MAINTAIN TWO THROUGH LANES IN EACH DIRECTION.

5. CONSTRUCT EASTBOUND RETAINING WALLS, MULTI-USE PATH, BRIDGE BEAM SEATS, AND THE CONCRETE CRASH WALLS.

STAGE 2

1. REMOVE AND RELOCATE OR COVER ANY CONFLICTING EXISTING SIGNS.

2. INSTALL TEMPORARY PAVEMENT MARKINGS, TEMPORARY CONCRETE BARRIER, AND WORK ZONE SIGNS PER STAGE 2 TRAFFIC CONTROL PLAN.

3. CLOSE EASTBOUND AND WESTBOUND INSIDE LANES OF ALGONQUIN ROAD. MAINTAIN TWO THROUGH LANES IN EACH DIRECTION.

4. REMOVE THE EXISTING BARRIER TRANSITIONS.

5. INSTALL THE ATTENUATORS AT THE WEST AND EAST END OF MEDIAN PIER. CONSTRUCT BRIDGE BEAM SEATS.

WINTER SHUTDOWN

1. REMOVE WORK ZONE SIGNS FROM PREVIOUS STAGE. MAINTAIN EXISTING SIGNS.

2. REMOVE TEMPORARY PAVEMENT MARKINGS THAT MAY CONFLICT WITH THE PROPOSED TRAFFIC CONTROL PLAN.

3. INSTALL TEMPORARY PAVEMENT MARKINGS PER WINTER SHUTDOWN PLANS.

4. THREE WESTBOUND AND THREE EASTBOUND THROUGH LANES SHALL BE PROVIDED ON THE EXISTING LANE CONFIGURATION.

1

FINAL STAGE

1. REMOVE TEMPORARY PAVEMENT MARKINGS AND WORK ZONE SIGNS. MAINTAIN EXISTING SIGNS.

2. COMPLETE LANDSCAPING RESTORATION UTILIZING APPLICABLE IDOT HIGHWAY STANDARDS.

3. COMPLETE PERMANENT PAVEMENT MARKINGS UTILIZING APPLICABLE IDOT HIGHWAY STANDARDS.

SEQUENCE OF CONSTRUCTION - RAND ROAD

STAGE 1

1. REMOVE AND RELOCATE OR COVER ANY CONFLICTING EXISTING SIGNS.

2. REMOVE PAVEMENT MARKINGS AND RAISED PAVEMENT MARKER REFLECTORS THAT MAY CONFLICT WITH THE PROPOSED TRAFFIC CONTROL PLANS.

3. INSTALL TEMPORARY PAVEMENT MARKINGS, TEMPORARY CONCRETE BARRIER, AND WORK ZONE SIGNS PER STAGE 1 TRAFFIC CONTROL PLAN.

4. CLOSE EASTBOUND AND WESTBOUND OUTSIDE LANES OF RAND ROAD. MAINTAIN ONE THROUGH LANE IN EACH DIRECTION.

5. CONSTRUCT EASTBOUND AND WESTBOUND CONCRETE CRASH WALLS AND BRIDGE BEAM SEATS. CONSTRUCT THE GUARDRAIL, RETAINING WALL AND THE MULTI-USE PATH.

6. AFTER STAGE 1 IS COMPLETED, CURB RAMPS AT NORTH CLARMONT DRIVE, NORTH FRONTAGE ROAD, AND IL 53 NORTHBOUND OFF RAMP INTERSECTIONS SHALL BE CONSTRUCTED PER APPLICABLE IDOT HIGHWAY STANDARDS.

   THE MEDIAN AT NORTH FRONTAGE ROAD INTERSECTION SHALL BE CONSTRUCTED PER APPLICABLE IDOT HIGHWAY STANDARDS.

STAGE 2

1. REMOVE AND RELOCATE OR COVER ANY CONFLICTING EXISTING SIGNS.

2. INSTALL TEMPORARY PAVEMENT MARKINGS, TEMPORARY CONCRETE BARRIER, AND WORK ZONE SIGNS PER STAGE 2 TRAFFIC CONTROL PLAN.

3. CLOSE EASTBOUND AND WESTBOUND INSIDE LANES OF RAND ROAD. MAINTAIN ONE THROUGH LANE IN EACH DIRECTION.

4. CONSTRUCT CONCRETE CRASHWALLS AND BRIDGE BEAM SEATS. INSTALL THE ATTENUATORS AT THE WEST AND EAST END OF MEDIAN PIER.

WINTER SHUTDOWN

1. REMOVE WORK ZONE SIGNS FROM PREVIOUS STAGE. MAINTAIN EXISTING SIGNS.

2. REMOVE TEMPORARY PAVEMENT MARKINGS THAT MAY CONFLICT WITH THE PROPOSED TRAFFIC CONTROL PLAN.

3. INSTALL TEMPORARY PAVEMENT MARKINGS PER WINTER SHUTDOWN PLANS.

4. TWO WESTBOUND AND TWO EASTBOUND THROUGH LANES SHALL BE PROVIDED ON THE EXISTING LANE CONFIGURATION.

1

FINAL STAGE

1. REMOVE TEMPORARY PAVEMENT MARKINGS AND WORK ZONE SIGNS. MAINTAIN EXISTING SIGNS.

2. COMPLETE LANDSCAPING RESTORATION UTILIZING APPLICABLE IDOT HIGHWAY STANDARDS.

3. COMPLETE PERMANENT PAVEMENT MARKINGS UTILIZING APPLICABLE IDOT HIGHWAY STANDARDS.

SEQUENCE OF CONSTRUCTION - FRONTAGE ROADS

WEST FRONTAGE ROAD BETWEEN RAND ROAD AND DUNDEE ROAD

1. INSTALL DETOUR PLANS FOR THE FRONTAGE ROAD BETWEEN RAND ROAD AND DUNDEE ROAD.

2. REMOVE EXISTING STORM SEWER AND CONSTRUCT PROPOSED STORM SEWER AND JUNCTION BOXES PER DRAINAGE PLANS.

NORTH WILKE ROAD AT CELLULAR DRIVE

1. UTILIZE APPLICABLE HIGHWAY STANDARDS FOR TEMPORARY LANE CLOSURE WITH A FLAGGER TO CONSTRUCT PROPOSED STORM SEWER PER DRAINAGE PLANS.

NORTH WILKE ROAD AT SOUTHBOUND RAND ROAD ON RAMP

1. UTILIZE APPLICABLE HIGHWAY STANDARDS FOR TEMPORARY LANE CLOSURE WITH A FLAGGER TO CONSTRUCT PROPOSED STORM SEWER PER DRAINAGE PLANS.

FINAL STAGE

1. COMPLETE LANDSCAPING RESTORATION UTILIZING APPLICABLE IDOT HIGHWAY STANDARDS.

2. COMPLETE PERMANENT PAVEMENT MARKINGS UTILIZING APPLICABLE IDOT HIGHWAY STANDARDS.

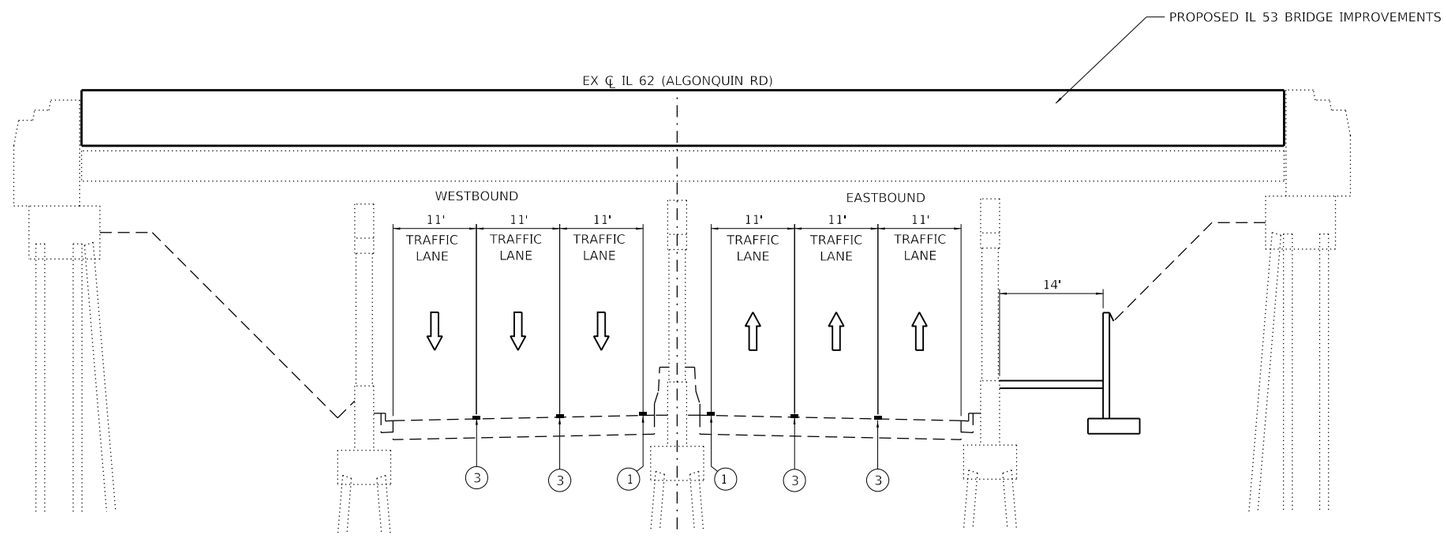

IL 62 (ALGONQUIN ROAD) AT IL 53
WINTER SHUTDOWN

LEGEND

- (A) EXISTING PAVEMENT MARKING 4" YELLOW
- (B) EXISTING PAVEMENT MARKING 4" WHITE
- (C) EXISTING PAVEMENT MARKING 4" WHITE SKIP-DASH
- (1) TEMPORARY PAVEMENT MARKING - LINE 4" - MODIFIED URETHANE SOLID YELLOW
- (2) TEMPORARY PAVEMENT MARKING - LINE 4" - MODIFIED URETHANE SOLID WHITE
- (3) TEMPORARY PAVEMENT MARKING - LINE 4" - MODIFIED URETHANE WHITE, 10' SKIP- 30' DASH

- DIRECTION OF TRAFFIC FLOW
- TEMPORARY CONCRETE BARRIER
- TEMPORARY CONCRETE BARRIER - PINNED
- TYPE II BARRICADE OR DRUM
- WORK ZONE

NOTES

1. TEMPORARY CONCRETE BARRIER TO INCLUDE EITHER CRYSTAL OR AMBER TYPE C REFLECTORS @ 40' CENTERS PER HIGHWAY STANDARD 704001 & 782006 (TYP.)

PROJECT: VA6DN
FILE NAME: pw:\\wsp-us-pw.bentley.com:wsp-us-pw-1\Documents\Project 62N91-IL 53 Bridge\CAD Sheets\D62N91-sht-staging-typical-23A-VSP.dgn

USER NAME = USAT719599	DESIGNED - MM	REVISED - ⚠ 2/14/2025	STATE OF ILLINOIS DEPARTMENT OF TRANSPORTATION
	DRAWN - MM	REVISED -	
PLOT SCALE = 20.0000 ' / in.	CHECKED - TC	REVISED -	
PLOT DATE = 2/13/2025	DATE - 12/13/2024	REVISED -	

IL 62 (ALGONQUIN ROAD)
TRAFFIC CONTROL TYPICAL SECTION

SCALE: NTS | SHEET 31A OF 32 SHEETS | STA. TO STA.

F.A.P. RTE.	SECTION	COUNTY	TOTAL SHEETS	SHEET NO.
342	2018-100-BR	COOK	1351	206A
		CONTRACT NO. 62N91		
		ILLINOIS	FED. AID PROJECT	

⚠1

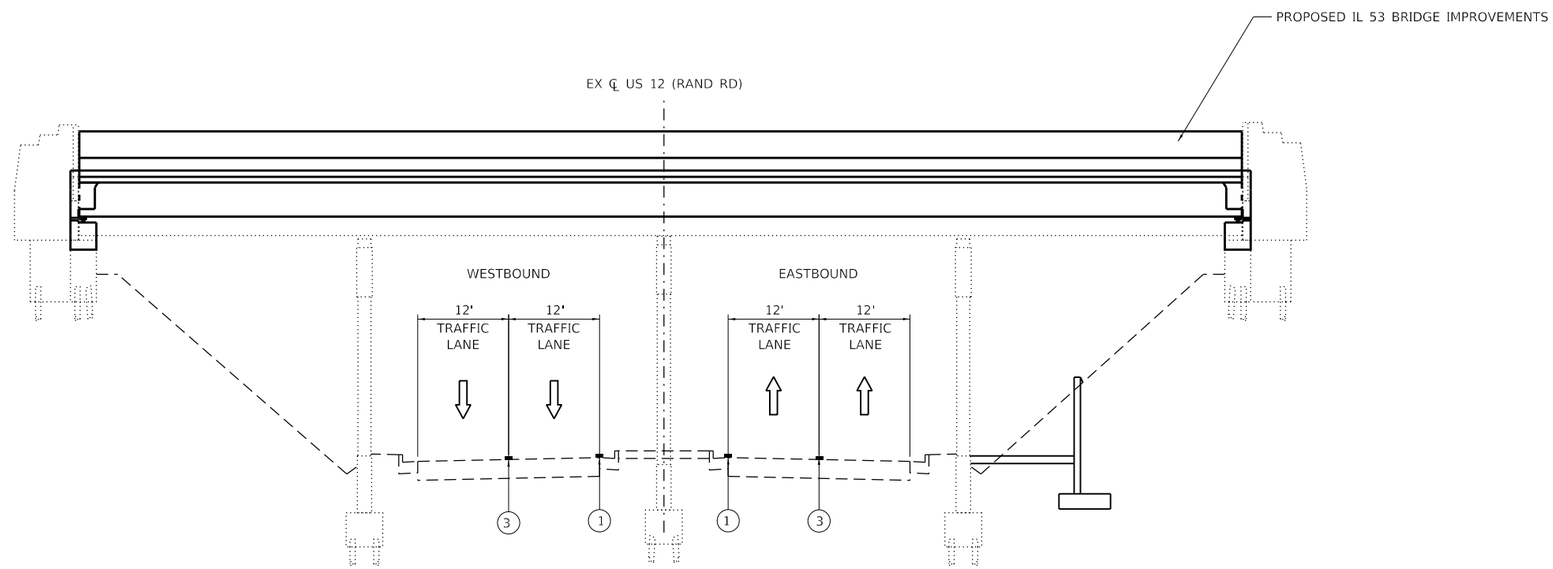

US 12 (RAND ROAD) AT IL 53
WINTER SHUTDOWN

LEGEND

- (A) EXISTING PAVEMENT MARKING 4" YELLOW
- (B) EXISTING PAVEMENT MARKING 4" WHITE
- (C) EXISTING PAVEMENT MARKING 4" WHITE SKIP-DASH
- (1) TEMPORARY PAVEMENT MARKING - LINE 4" - MODIFIED URETHANE SOLID YELLOW
- (2) TEMPORARY PAVEMENT MARKING - LINE 4" - MODIFIED URETHANE SOLID WHITE
- (3) TEMPORARY PAVEMENT MARKING - LINE 4" - MODIFIED URETHANE WHITE, 10' SKIP- 30' DASH

- DIRECTION OF TRAFFIC FLOW
- TEMPORARY CONCRETE BARRIER
- TEMPORARY CONCRETE BARRIER - PINNED
- TYPE II BARRICADE OR DRUM
- WORK ZONE

NOTES

1. TEMPORARY CONCRETE BARRIER TO INCLUDE EITHER CRYSTAL OR AMBER TYPE C REFLECTORS @ 40' CENTERS PER HIGHWAY STANDARD 704001 & 782006 (TYP.)

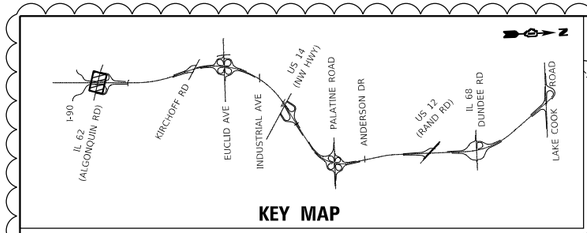

KEY MAP

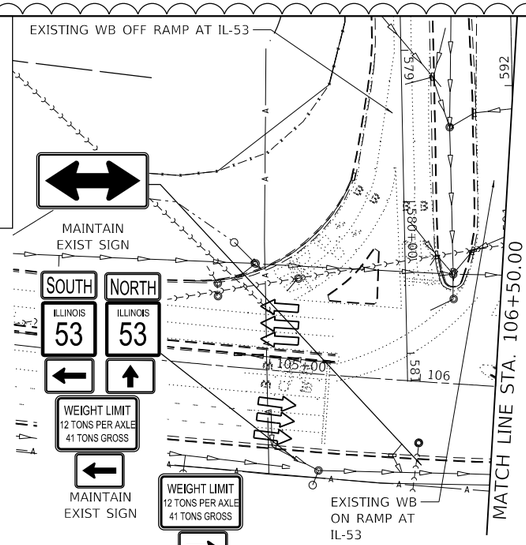

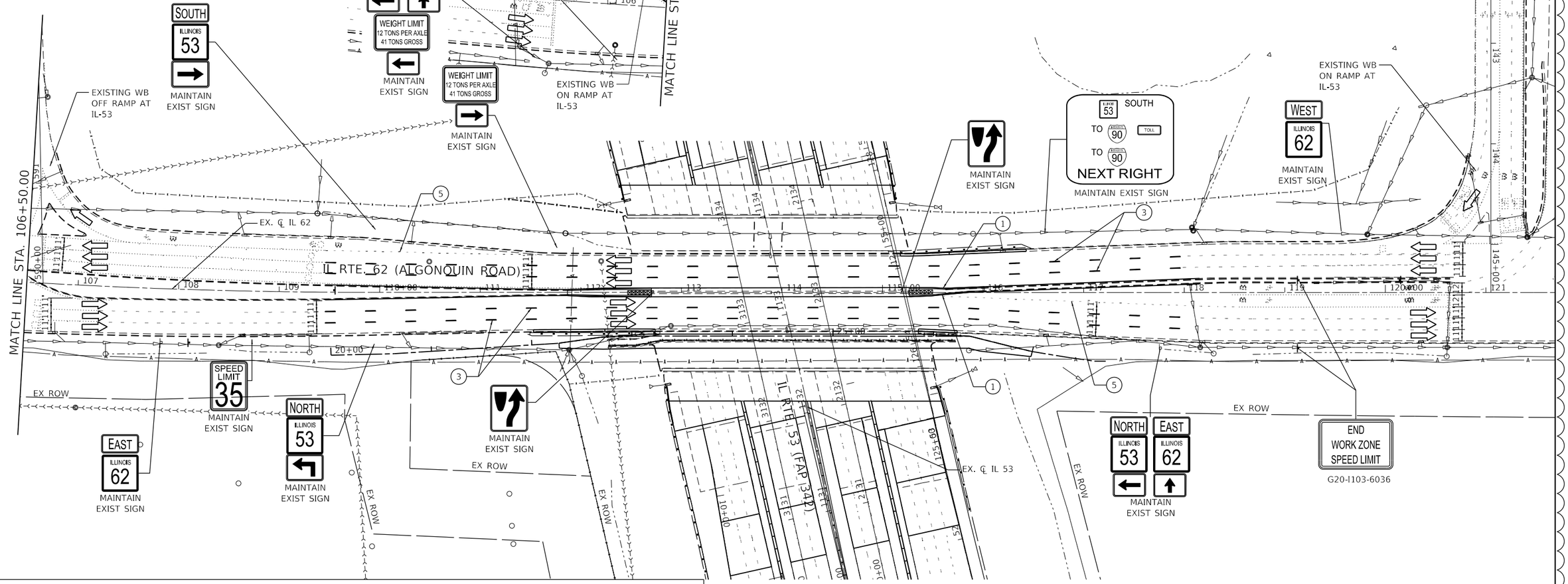

LEGEND

1. TEMPORARY PAVEMENT MARKING - LINE 4" - MODIFIED URETHANE SOLID YELLOW
2. TEMPORARY PAVEMENT MARKING - LINE 4" - MODIFIED URETHANE SOLID WHITE
3. TEMPORARY PAVEMENT MARKING - LINE 4" - MODIFIED URETHANE WHITE, 10' DASH 30' SKIP
4. TEMPORARY PAVEMENT MARKING - LINE 4" - MODIFIED URETHANE SOLID YELLOW (DOUBLE YELLOW)
5. TEMPORARY PAVEMENT MARKING - LINE 6" - MODIFIED URETHANE WHITE, 2' DASH 6' SKIP
6. TEMPORARY PAVEMENT MARKING - LINE 6" - MODIFIED URETHANE SOLID WHITE
7. TEMPORARY PAVEMENT MARKING - LINE 24" - MODIFIED URETHANE SOLID WHITE
8. TEMPORARY PAVEMENT MARKING LETTERS AND SYMBOLS - MODIFIED URETHANE

- SIGN
- TYPE II BARRICADE OR DRUM WITH STEADY BURNING LIGHT AT 50' CENTERS IN TANGENT AND 20' CENTERS IN TAPERS AND RADII
- TYPE III BARRICADE WITH FLASHING LIGHTS
- WORK ZONE
- TEMPORARY PAVEMENT PREVIOUSLY BUILT
- TEMPORARY CONCRETE BARRIER
- TEMPORARY IMPACT ATTENUATOR
- FLASHING ARROW BOARD
- TRAFFIC FLOW DIRECTION
- FLAGGER WITH CONTROL SIGN

STRAND ASSOCIATES®
1170 SOUTH HOUBOLT ROAD
JOLIET, ILLINOIS 60431
(815) 744-4200

USER NAME = StevenB	DESIGNED - SRB	REVISED - 2/18/25
	DRAWN - DJW	REVISED -
PLOT SCALE = 100.0000 ' / in.	CHECKED - MAG	REVISED -
PLOT DATE = 2/18/2025	DATE - 12/13/24	REVISED -

STATE OF ILLINOIS
DEPARTMENT OF TRANSPORTATION

IL ROUTE 62 (ALGONQUIN ROAD)
TRAFFIC CONTROL PLAN – WINTER SHUTDOWN

SCALE: 1" = 50' | SHEET 1 OF 1 SHEETS | STA. 1171+00.00 TO STA. 1186+00.00

F.A.P. RTE.	SECTION	COUNTY	TOTAL SHEETS	SHEET NO.
342	2018-100-BR	COOK	1351	346A

CONTRACT NO. 62N91

ILLINOIS | FED. AID PROJECT

MODEL: Default
FILE NAME: V:\CDOT\Projects\MAINT\SMC-SMCAD\Kane\MC-SMCAD-Kane-MC-SMCAD-Kane-MC-SMCAD-Kane-MC-SMCAD-Kane-MC-SMCAD-Kane.dgn

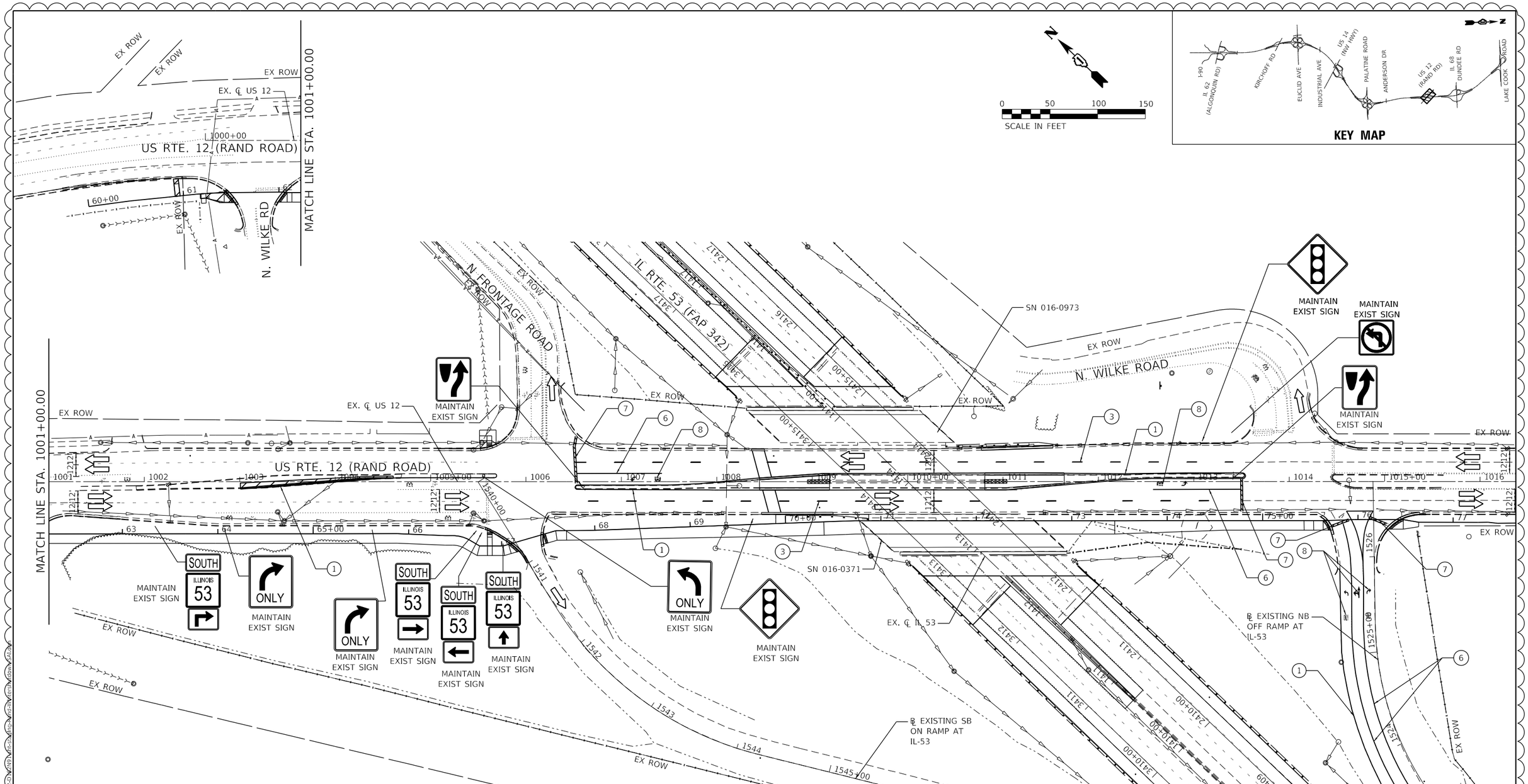

LEGEND

1. TEMPORARY PAVEMENT MARKING - LINE 4" - MODIFIED URETHANE SOLID YELLOW
2. TEMPORARY PAVEMENT MARKING - LINE 4" - MODIFIED URETHANE SOLID WHITE
3. TEMPORARY PAVEMENT MARKING - LINE 4" - MODIFIED URETHANE WHITE, 10' DASH 30' SKIP
4. TEMPORARY PAVEMENT MARKING - LINE 4" - MODIFIED URETHANE SOLID YELLOW (DOUBLE YELLOW)
5. TEMPORARY PAVEMENT MARKING - LINE 6" - MODIFIED URETHANE WHITE, 2' DASH 6' SKIP
6. TEMPORARY PAVEMENT MARKING - LINE 6" - MODIFIED URETHANE SOLID WHITE
7. TEMPORARY PAVEMENT MARKING - LINE 24" - MODIFIED URETHANE SOLID WHITE
8. TEMPORARY PAVEMENT MARKING LETTERS AND SYMBOLS - MODIFIED URETHANE

- SIGN
- TYPE II BARRICADE OR DRUM WITH STEADY BURNING LIGHT AT 50' CENTERS IN TANGENT AND 20' CENTERS IN TAPERS AND RADII
- TYPE III BARRICADE WITH FLASHING LIGHTS
- WORK ZONE
- TEMPORARY PAVEMENT PREVIOUSLY BUILT
- TEMPORARY CONCRETE BARRIER
- TEMPORARY IMPACT ATTENUATOR
- FLASHING ARROW BOARD
- TRAFFIC FLOW DIRECTION
- FLAGGER WITH CONTROL SIGN

STRAND ASSOCIATES®
1170 SOUTH HOUBOLT ROAD
JOLIET, ILLINOIS 60431
(815) 744-4200

USER NAME = StevenB	DESIGNED - SRB	REVISED - 2/18/25	
	DRAWN - DJW	REVISED -	
PLOT SCALE = 100.0000 ' / in.	CHECKED - MAG	REVISED -	
PLOT DATE = 2/18/2025	DATE - 12/13/24	REVISED -	

STATE OF ILLINOIS
DEPARTMENT OF TRANSPORTATION

US ROUTE 12 (RAND ROAD)
TRAFFIC CONTROL PLAN - WINTER SHUTDOWN

SCALE: 1" = 50' | SHEET 1 OF 1 SHEETS | STA. 1001+00.00 TO STA. 1016+00.00

F.A.P. RTE.	SECTION	COUNTY	TOTAL SHEETS	SHEET NO.
342	2018-100-BR	COOK	1351	348A
		CONTRACT NO. 62N91		
		ILLINOIS	FED. AID PROJECT	

MODEL: Default
FILE NAME: V:\2018\060-\62N91\Plans\Traffic\Lighting\SHEETS\348A-Sheet1.dgn

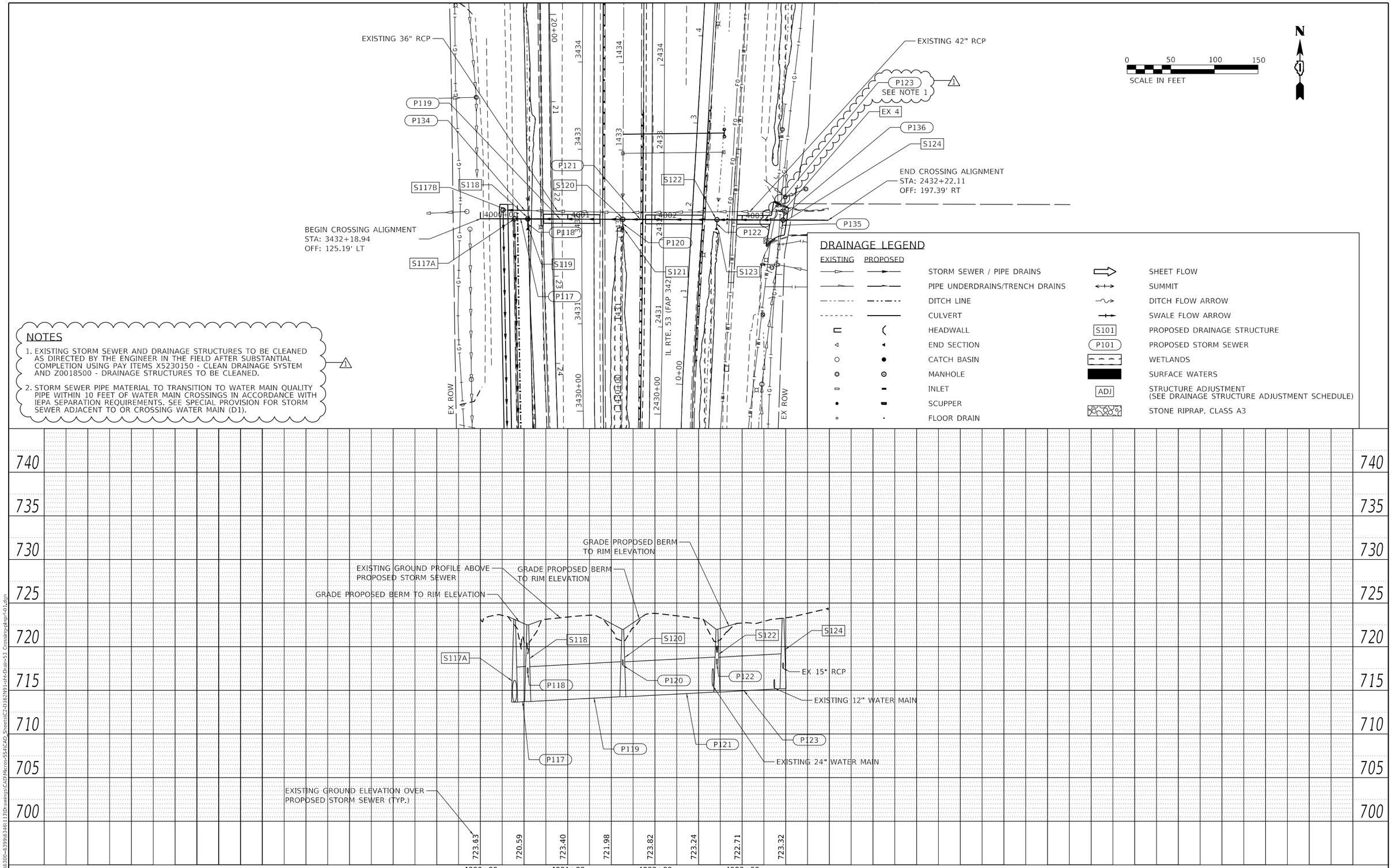

STRAND ASSOCIATES®
1170 SOUTH HOUBOLT ROAD
JOLIET, ILLINOIS 60431
(815) 744-4200

USER NAME = AlexSc	DESIGNED -	REVISED - 1 02/18/2025	
	DRAWN -	REVISED -	
PLOT SCALE = 100.0000 ' / in.	CHECKED -	REVISED -	
PLOT DATE = 2/25/2025	DATE -	REVISED -	

STATE OF ILLINOIS
DEPARTMENT OF TRANSPORTATION

IL ROUTE 53
PROPOSED DRAINAGE PLAN AND PROFILE

SCALE: N/A | SHEET 9 OF 11 SHEETS | STA. N/A TO STA. N/A

F.A.P. RTE.	SECTION	COUNTY	TOTAL SHEETS	SHEET NO.
342	2018-100-BR	COOK	1351	389

CONTRACT NO. 62N91
ILLINOIS | FED. AID PROJECT

1 REV. 2/25/25

MODEL: Default
FILE NAME: S:\IDOL\6300-6399\6346\1130\drawings\CAD\Micros-SS4\CAD_Sheets\C2-D162N91-sht-Drain-53 Crossing-plnprf-01.dgn

DRAINAGE PIPE SCHEDULE

PIPE NO.	PAY ITEM	PIPE DESCRIPTION	LENGTH (FEET)	FROM STRUCTURE	INVERT START	TO STRUCTURE	INVERT END	SLOPE (%)
P101	550A0810	STORM SEWERS, CLASS A, TYPE 3 66"	48	S102	711.17	S101	711.12	0.10%
P102	550A0510	STORM SEWERS, CLASS A, TYPE 2 66"	137	S103	711.31	S102	711.17	0.10%
P103	550A0510	STORM SEWERS, CLASS A, TYPE 2 66"	129	S104	711.44	S103	711.31	0.10%
P104	55201900	STORM SEWERS JACKED IN PLACE, 66"	98	S105	711.54	S104	711.44	0.10%
P105	550A0810	STORM SEWERS, CLASS A, TYPE 3 66"	234	S106	711.77	S105	711.54	0.10%
P106	550A0810	STORM SEWERS, CLASS A, TYPE 3 66"	53	S107	711.82	S106	711.77	0.10%
P107	550A0360	STORM SEWERS, CLASS A, TYPE 2 15"	13	S108	717.62	S107	717.49	1.00%
P108	550A4740	STORM SEWERS, CLASS A, TYPE 1 EQUIVALENT ROUND-SIZE 66"	56	S109	711.88	S107	711.82	0.10%
P109	550A5530	STORM SEWERS, CLASS A, TYPE 2 EQUIVALENT ROUND-SIZE 60"	103	S110	711.98	S109	711.88	0.10%
P110	550A0500	STORM SEWERS, CLASS A, TYPE 2 60"	177	S111	712.16	S110	711.98	0.10%
P111	550A0500	STORM SEWERS, CLASS A, TYPE 2 60"	330	S112	712.49	S111	712.16	0.10%
P112	550A0500	STORM SEWERS, CLASS A, TYPE 2 60"	167	S113A	712.66	S112	712.49	0.10%
P113A	550A0500	STORM SEWERS, CLASS A, TYPE 2 60"	114	S114A	712.77	S113A	712.66	0.10%
P113B	550A0470	STORM SEWERS, CLASS A, TYPE 2 42"	117	S114B	714.75	S113B	714.63	0.10%
P113C	550A0410	STORM SEWERS, CLASS A, TYPE 2 24"	15	S113B	714.63	S113A	714.56	0.50%
P114A	550A0500	STORM SEWERS, CLASS A, TYPE 2 60"	293	S115A	713.06	S114A	712.77	0.10%
P114B	550A0470	STORM SEWERS, CLASS A, TYPE 2 42"	294	S115B	715.04	S114B	714.75	0.10%
P114C	550A0410	STORM SEWERS, CLASS A, TYPE 2 24"	13	S114B	714.75	S114A	714.68	0.50%
P115A	550A0500	STORM SEWERS, CLASS A, TYPE 2 60"	300	S116A	713.36	S115A	713.06	0.10%
P115B	550A0470	STORM SEWERS, CLASS A, TYPE 2 42"	300	S116B	715.34	S115B	715.04	0.10%
P115C	550A0410	STORM SEWERS, CLASS A, TYPE 2 24"	13	S115B	715.04	S115A	714.98	0.50%
P116A	550A0500	STORM SEWERS, CLASS A, TYPE 2 60"	291	S117A	713.65	S116A	713.36	0.10%
P116B	550A0470	STORM SEWERS, CLASS A, TYPE 2 42"	300	S117B	715.64	S116B	715.34	0.10%
P116C	550A0410	STORM SEWERS, CLASS A, TYPE 2 24"	13	S116B	715.34	S116A	715.28	0.50%
P117	550A0480	STORM SEWERS, CLASS A, TYPE 2 48"	15	S118	713.72	S117A	713.66	0.40%
P118	550A0360	STORM SEWERS, CLASS A, TYPE 2 15"	9	S118	717.00	S119	716.96	0.50%
P119	550A0480	STORM SEWERS, CLASS A, TYPE 2 48"	108	S120	714.27	S118	713.72	0.50%
P120	550A0360	STORM SEWERS, CLASS A, TYPE 2 15"	8	S120	718.59	S121	717.90	0.50%
P121	550A0480	STORM SEWERS, CLASS A, TYPE 2 48"	107	S122	714.80	S120	714.27	0.50%
P122	550A0360	STORM SEWERS, CLASS A, TYPE 2 15"	7	S122	718.00	S123	717.97	0.50%
* P123	Z0056626	STORM SEWER (WATER MAIN REQUIREMENTS) 48 INCH	40	S124	715.00	S122	714.80	0.50% 1
	550A0480	STORM SEWERS, CLASS A, TYPE 2 48"	35					
P124	550A0710	STORM SEWERS, CLASS A, TYPE 3 24"	12	EX 1	715.04	S111	714.98	0.50%
P125	550A0710	STORM SEWERS, CLASS A, TYPE 3 24"	12	EX 2	715.31	S112	715.25	0.50%
P126	60100945	PIPE DRAINS 12"	80	S125	736.04	S126	720.50	MATCH FORESLOPE
P127	60100945	PIPE DRAINS 12"	68	S127	735.74	S128	720.00	MATCH FORESLOPE
P128	60100945	PIPE DRAINS 12"	46	S129	736.06	S130	721.50	MATCH FORESLOPE
P129	60100945	PIPE DRAINS 12"	68	S131	736.80	S132	719.19	MATCH FORESLOPE
P130	550A0470	STORM SEWERS, CLASS A, TYPE 2 42"	19	S109	711.60	EX PIPE	711.54	0.30%
P131	550A0470	STORM SEWERS, CLASS A, TYPE 2 42"	23	EX PIPE	711.70	S109	711.63	0.30%
P132	550A0470	STORM SEWERS, CLASS A, TYPE 2 42"	46	S113B	714.63	S133	714.50	0.27%
P133	550A0380	STORM SEWERS, CLASS A, TYPE 2 18"	15	EX PIPE	714.81	S113B	714.77	0.30%
P134	550A0450	STORM SEWERS, CLASS A, TYPE 2 36"	29	EX PIPE	716.03	S117B	715.89	0.50%
P135	550A0360	STORM SEWERS, CLASS A, TYPE 2 15"	8	EX PIPE	717.54	S124	717.52	0.30%
P136	550A0360	STORM SEWERS, CLASS A, TYPE 2 15"	10	S124	717.52	EX 4	717.49	0.30%
P201	60100945	PIPE DRAINS 12"	66	S201	740.07	S202	725.87	MATCH FORESLOPE
P202	60100945	PIPE DRAINS 12"	138	S203	740.95	S204	725.00	MATCH FORESLOPE
P203	60100945	PIPE DRAINS 12"	57	S205	739.82	S206	730.00	MATCH FORESLOPE
P204	60100945	PIPE DRAINS 12"	68	S207	741.14	S208	726.00	MATCH FORESLOPE
P301	60100945	PIPE DRAINS 12"	21	S301	713.69	S302	712.70	MATCH FORESLOPE
P302	60100945	PIPE DRAINS 12"	17	S303	713.83	EX 3	710.00	MATCH FORESLOPE
P303	550A0410	STORM SEWERS, CLASS A, TYPE 2 24"	19	EX PIPE	703.95	S304	703.74	1.11%
P304	550A0410	STORM SEWERS, CLASS A, TYPE 2 24"	8	EX PIPE	712.31	S304	712.04	3.37%
P305	550A0410	STORM SEWERS, CLASS A, TYPE 2 24"	52	S304	702.84	S305	702.32	1.00%
P306	550A0410	STORM SEWERS, CLASS A, TYPE 2 24"	64	S305	702.22	S306	701.58	1.00%
P307	550A0480	STORM SEWERS, CLASS A, TYPE 2 48"	8	EX PIPE	701.72	S306	701.64	1.00%
P308	550A0500	STORM SEWERS, CLASS A, TYPE 2 60"	53	S306	698.58	N/A	698.05	1.00%
P309	550A0380	STORM SEWERS, CLASS A, TYPE 2 18"	8	EX PIPE	702.88	N/A	702.82	0.80%
P310	550A0450	STORM SEWERS, CLASS A, TYPE 2 36"	8	EX PIPE	702.85	N/A	702.84	0.17%

* WATER MAIN REQUIREMENTS PIPE ONLY WITHIN 10 FEET OF WATER MAIN CROSSING PER IEPA REQUIREMENTS, SEE SHEET 389 1

SECTION A–A

NOT TO SCALE

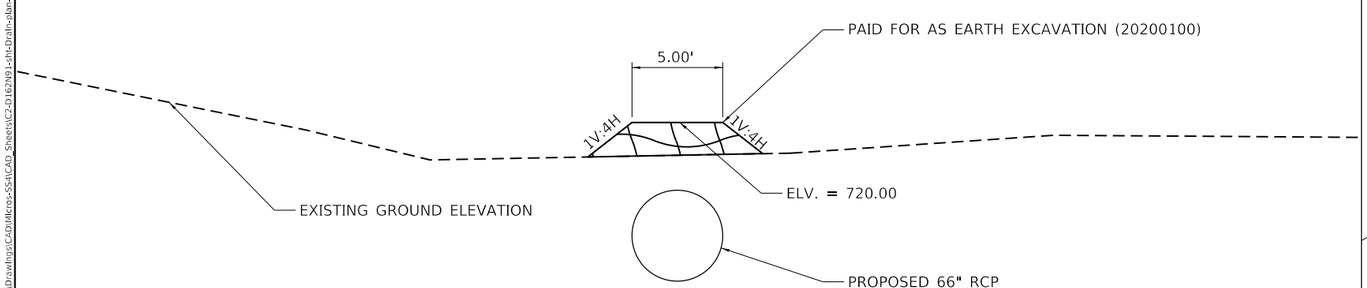

BERM CONSTRUCTION DETAIL

NOT TO SCALE

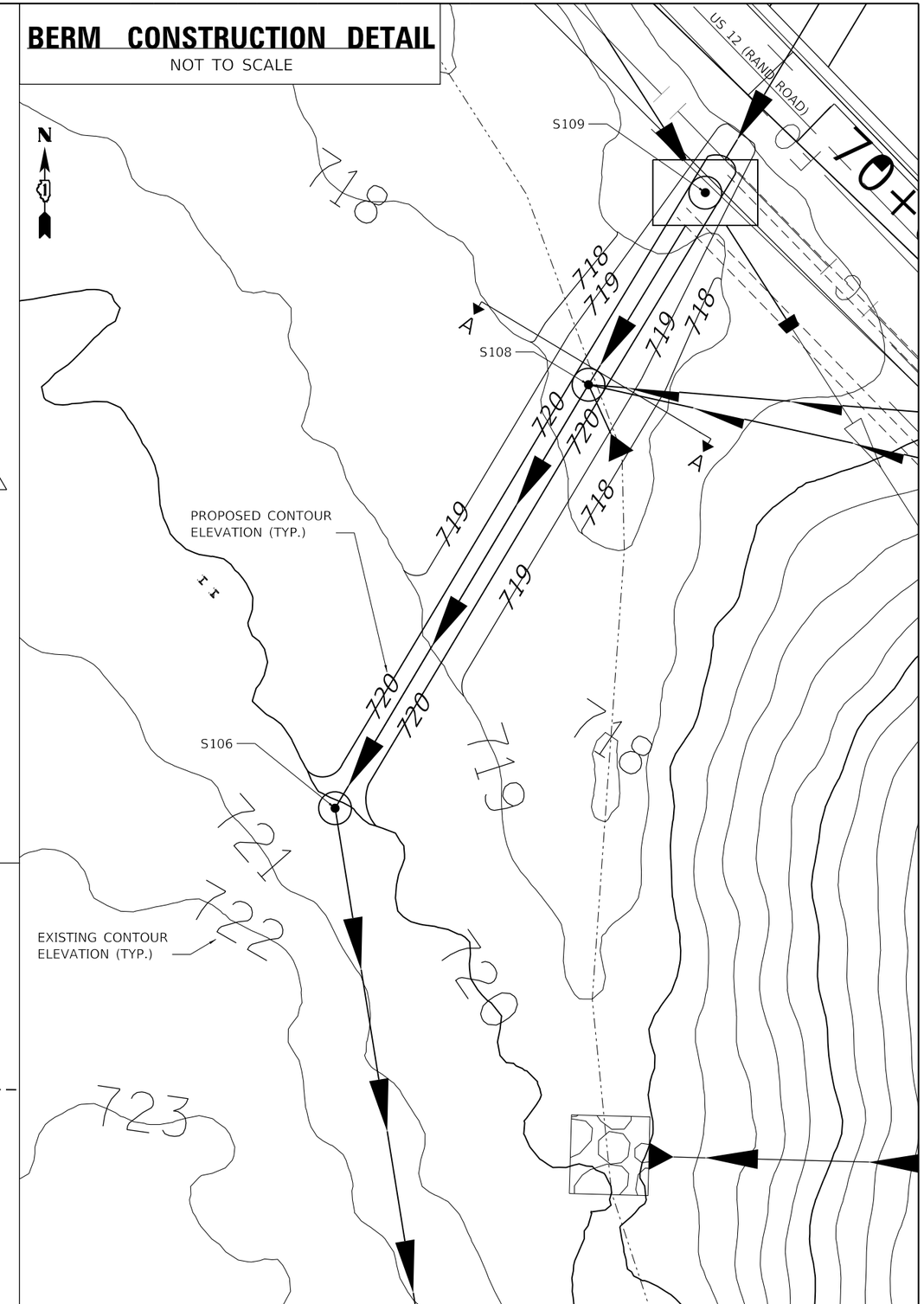

STRAND ASSOCIATES®
1170 SOUTH HOUBOLT ROAD
JOLIET, ILLINOIS 60431
(815) 744-4200

USER NAME = AlexSc	DESIGNED - SRB	REVISED - 1 02/18/2025	
	DRAWN - DJW	REVISED -	
PLOT SCALE = 100.0000 ' / in.	CHECKED - MAG	REVISED -	
PLOT DATE = 2/14/2025	DATE - 12/13/24	REVISED -	

STATE OF ILLINOIS
DEPARTMENT OF TRANSPORTATION

IL ROUTE 53
PROPOSED DRAINAGE SCHEDULES AND DETAILS

SCALE: N/A | SHEET 11 OF 11 SHEETS | STA. N/A | TO STA. N/A

F.A.P. RTE.	SECTION	COUNTY	TOTAL SHEETS	SHEET NO.
342	2018-100-BR	COOK	1351	391

CONTRACT NO. 62N91

ILLINOIS | FED. AID PROJECT

MODEL: Default
FILE NAME: $IQL6300-6399\6346\113\Drawings\CAD\Micros-Sta\CAD_Sheets\C2-D1620913-sht-Drain-Plan-Runaway-SA04.dgn

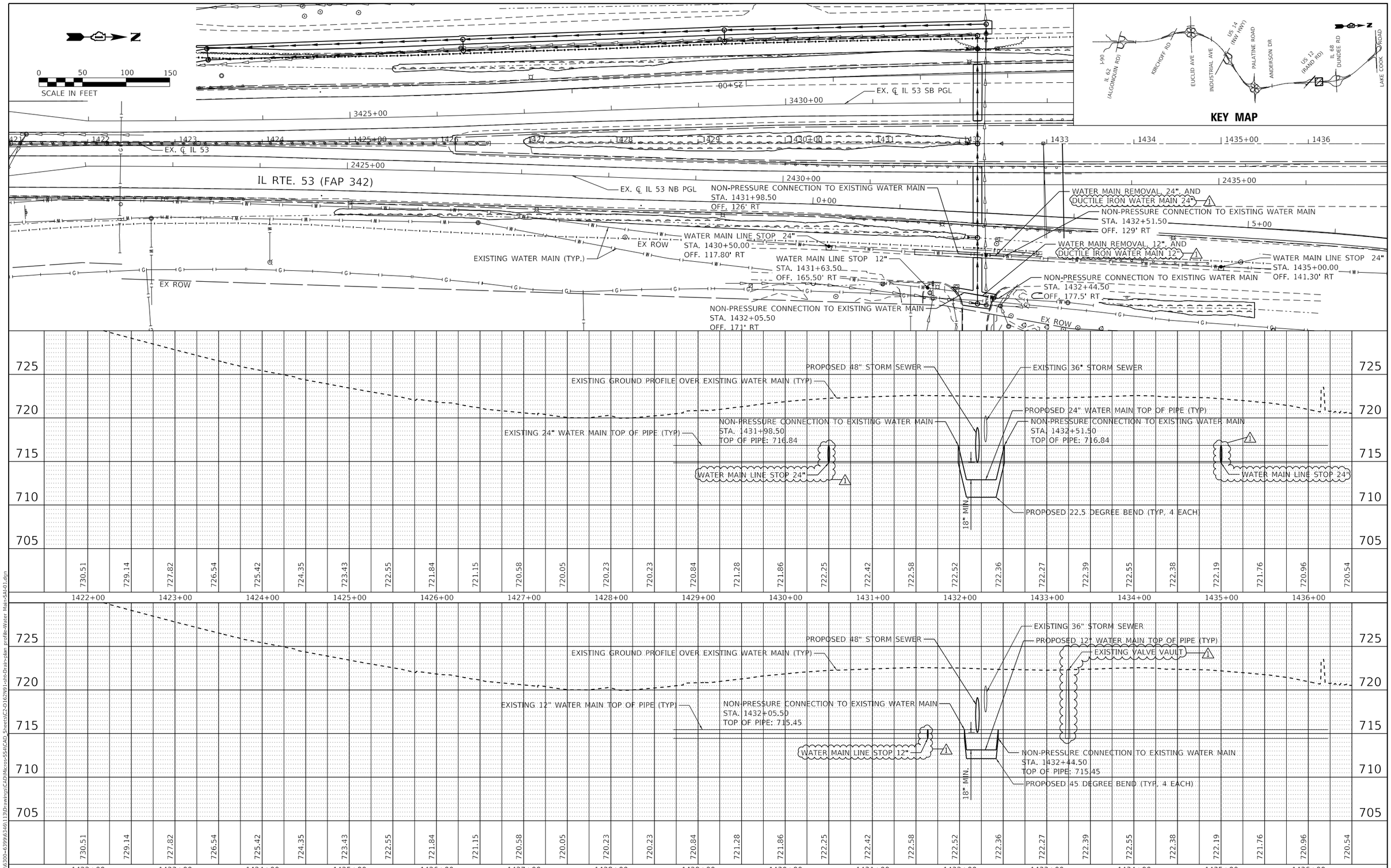

PLAN — SURVEYED / PLOTTED / ALIGNMENT CHECKED / RT. OF WAY CHECKED / CADD FILE NAME — NOTE BOOK NO. — BY — DATE

PROFILE — SURVEYED / PLOTTED / GRADES CHECKED / B.M. NOTED / STRUCTURE NOTAT'NS CHKD — NOTE BOOK NO. — BY — DATE

MODEL: Default
FILE NAME: S:\Oli\6300-63996346\113\Drawings\CAD\Micros-SS4\CAD_Sheets\C2-D162N91-sth-Drain-plan profile-Water Main-SAt-01.dgn

STRAND ASSOCIATES®
1170 SOUTH HOUBOLT ROAD
JOLIET, ILLINOIS 60431
(815) 744-4200

USER NAME = AlexSc	DESIGNED -	REVISED - 1 02/18/2025	
	DRAWN -	REVISED -	
PLOT SCALE = 100.0000 ' / in.	CHECKED -	REVISED -	
PLOT DATE = 2/25/2025	DATE -	REVISED -	

STATE OF ILLINOIS
DEPARTMENT OF TRANSPORTATION

IL ROUTE 53
PROPOSED WATER MAIN PLAN

SCALE: 1" = 50' | SHEET 1 OF 1 SHEETS | STA. 1421+50.00 TO STA. 1436+50.00

F.A.P. RTE.	SECTION	COUNTY	TOTAL SHEETS	SHEET NO.
342	2018-100-BR	COOK	1351	394A

CONTRACT NO. 62N91
ILLINOIS | FED. AID PROJECT

1 REV. 2/25/25

ITEM	UNIT	TOTAL QUANTITY
ELECTRIC SERVICE INSTALLATION	EACH	5
ELECTRIC UTILITY SERVICE CONNECTION	L SUM	1
UNDERGROUND CONDUIT, GALVANIZED STEEL, 2" DIA.	FOOT	1,535
UNDERGROUND CONDUIT, GALVANIZED STEEL, 4" DIA.	FOOT	3,110
UNDERGROUND CONDUIT, COILABLE NONMETALLIC CONDUIT, 2" DIA.	FOOT	9,258
CONDUIT ATTACHED TO STRUCTURE, 6" DIA., GALVANIZED STEEL	FOOT	30
CONDUIT ATTACHED TO STRUCTURE, RIGID NON-METALLIC, 6" DIA.	FOOT	100
CONDUIT EMBEDDED IN STRUCTURE, 2" DIA., PVC	FOOT	670
CONDUIT EMBEDDED IN STRUCTURE, 4" DIA., PVC	FOOT	1,040
JUNCTION BOX, STAINLESS STEEL, ATTACHED TO STRUCTURE, 24" X 24" X 8"	EACH	4
HEAVY-DUTY HANDHOLE	EACH	14
ELECTRIC CABLE IN CONDUIT, 600V (XLP-TYPE USE) 1/C NO. 8	FOOT	1,460
ELECTRIC CABLE IN CONDUIT, 600V (XLP-TYPE USE) 1/C NO. 6	FOOT	5,370
ELECTRIC CABLE IN CONDUIT, 600V (XLP-TYPE USE) 1/C NO. 4	FOOT	11,805
ELECTRIC CABLE IN CONDUIT, 600V (XLP-TYPE USE) 1/C NO. 2	FOOT	13,810
REMOVAL OF ELECTRIC SERVICE INSTALLATION	EACH	4
CONCRETE FOUNDATION, TYPE A	FOOT	15
DRILL EXISTING HANDHOLE	EACH	4
REMOVE EXISTING HANDHOLE	EACH	42
REMOVE EXISTING CONCRETE FOUNDATION	EACH	15
CLOSED CIRCUIT TELEVISION DOME CAMERA, HD	EACH	7
ILLINOIS DEPARTMENT OF TRANSPORTATION COMMUNICATIONS NODE	L SUM	1
CABINET, MODEL 334	EACH	7
CLOSED CIRCUIT TELEVISION CAMERA STRUCTURE, FOUNDATION, 80 FT. MOUNTING HEIGHT	FOOT	105
CLOSED CIRCUIT TELEVISION CAMERA STRUCTURE, GALVANIZED STEEL, 80 FT. MOUNTING HEIGHT	EACH	7
MAINTAINING ITS DURING CONSTRUCTION	CAL MO	24
REMOVAL OF CABLE IN CONDUIT	FOOT	8,125
WIRELESS VEHICLE DETECTION SYSTEM	EACH	5
TERMINATE FIBER IN CABINET	EACH	84
LAYER III (NETWORK) SWITCH	EACH	7
INTERCEPT EXISTING CONDUIT	EACH	6
UNDERGROUND CONDUIT, MULTI-DUCT, 4-18MM MICRODUCTS	FOOT	42,898
JUNCTION BOX, NON-METALLIC, EMBEDDED IN STRUCTURE, 32" X 12" X 8"	EACH	6
WOOD POLE, 25 FT, CLASS 4	EACH	19
FIBER OPTIC CABLE 24 FIBERS, SINGLE MODE	FOOT	1,881
FIBER OPTIC CABLE 12 FIBERS, SINGLE MODE	FOOT	415
FIBER OPTIC TERMINATION PANEL, 12 F OR 24F	EACH	7
FIBER OPTIC CABLE, MICRO, 144 FIBERS, SINGLE MODE	FOOT	46,743
FIBER OPTIC CABLE SPLICE - LATERAL	EACH	10
FIBER OPTIC CABLE SPLICE - MAINLINE	EACH	6
FIBER OPTIC UTILITY MARKER	EACH	48
FIBER OPTIC INNERDUCT 1 1/4" DIA.	FOOT	275
CONCRETE FOUNDATION, SURVEILLANCE CABINET MODEL 334	EACH	8
REMOVE EXISTING TRAFFIC SURVEILLANCE EQUIPMENT	L SUM	1
COMMUNICATIONS VAULT	EACH	20

1 REVISED SHEET 02/18/2025

ITS–04

MODEL: Default
FILE NAME: \\60\Projects\22145\04_CADD\CADD_Sheets\Contract 2\New folder\ITS_PLANS\D162N91-C2-ilds-ilrt-its-03.dgn

SINGH + ASSOCIATES, INC.
CONSULTING ENGINEERS

USER NAME = vnunez	DESIGNED - SG	REVISED - 1 02/18/2025	
	DRAWN - MAG/VN	REVISED -	
PLOT SCALE = 2 ' / in.	CHECKED - RP	REVISED -	
PLOT DATE = 2/18/2025	DATE - 1/24/2025	REVISED -	

STATE OF ILLINOIS
DEPARTMENT OF TRANSPORTATION

IL ROUTE 53
ITS SUMMARY OF QUANTITIES

SCALE: SHEET OF SHEETS STA. TO STA.

F.A.P. RTE.	SECTION	COUNTY	TOTAL SHEETS	SHEET NO.
342	2018-100-BR	COOK	1351	657

CONTRACT NO. 62N91

ILLINOIS FED. AID PROJECT

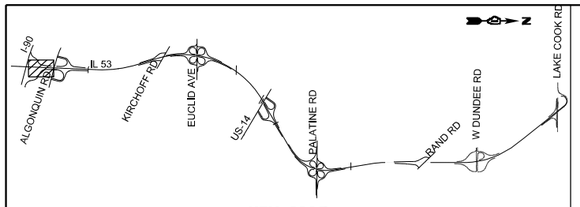

KEY MAP

0 50 100 150
SCALE IN FEET

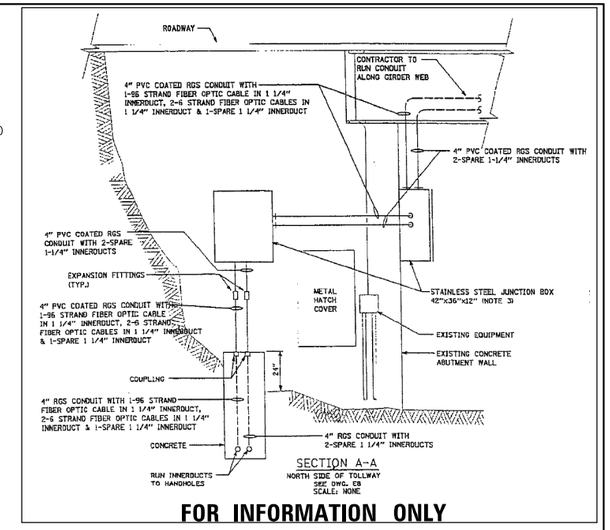

FOR INFORMATION ONLY

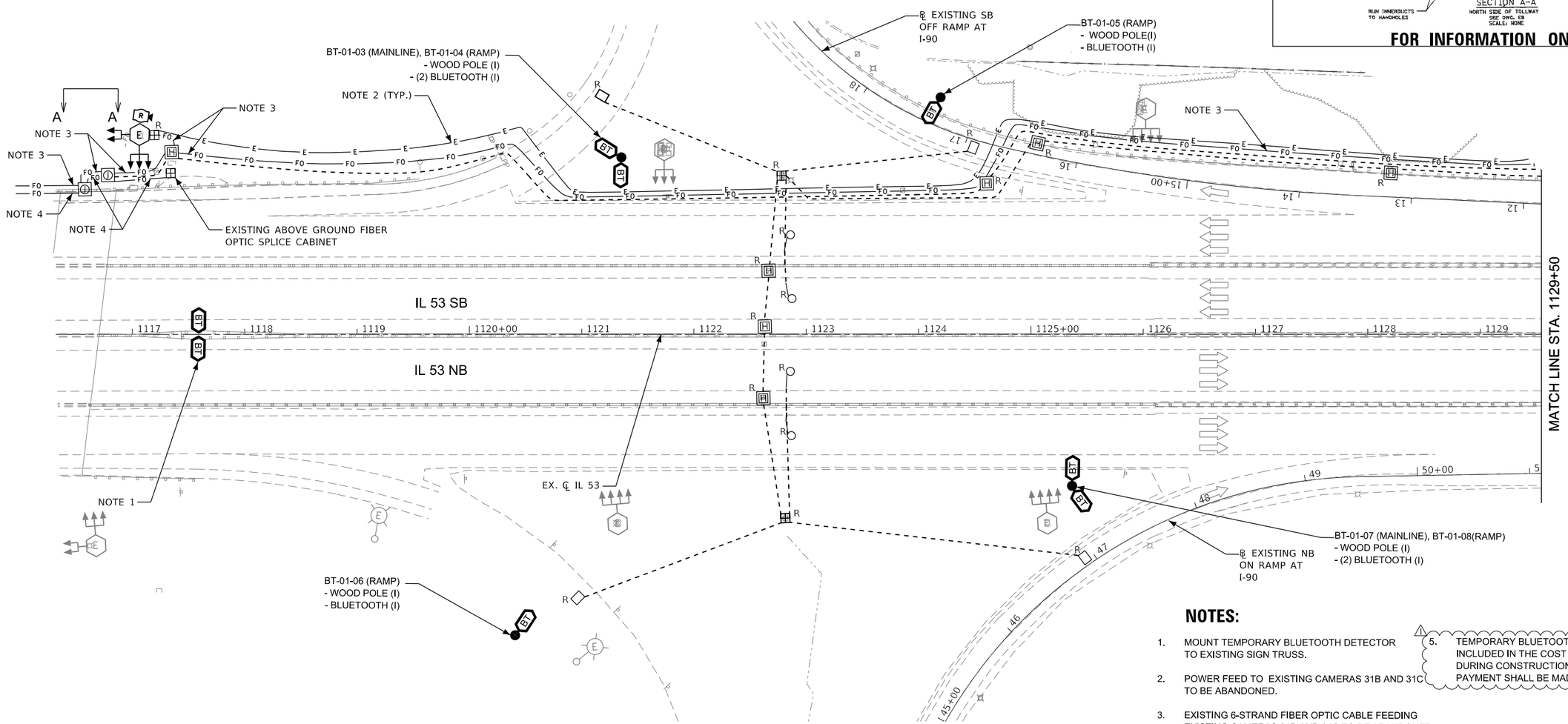

NOTES:

1. MOUNT TEMPORARY BLUETOOTH DETECTOR TO EXISTING SIGN TRUSS.
2. POWER FEED TO EXISTING CAMERAS 31B AND 31C TO BE ABANDONED.
3. EXISTING 6-STRAND FIBER OPTIC CABLE FEEDING EXISTING CAMERAS 31B AND 31C TO BE ABANDONED.
4. EXISTING 96-STRAND FIBER OPTIC CABLE TO REMAIN.
5. TEMPORARY BLUETOOTH DETECTORS SHALL BE INCLUDED IN THE COST OF THE MAINTAINING ITS DURING CONSTRUCTION PAY ITEM. NO ADDITIONAL PAYMENT SHALL BE MADE. (1)

1 REVISED SHEET 02/18/2025

ITS–05

MODEL: Default
FILE NAME: \\fs01\Projects\22145\04_CADD\CADD_Sheets\Contract 2\New folder\ITS PLANS\D162N91-C2-ilsbc-ilt-ilt-04.dgn

SINGH
SINGH + ASSOCIATES, INC.
CONSULTING ENGINEERS

USER NAME = vnunez	DESIGNED - SG	REVISED - (1) 02/18/2025	
	DRAWN - MAG/VN	REVISED -	
PLOT SCALE = 100.0000 ' / in.	CHECKED - RP	REVISED -	
PLOT DATE = 2/18/2025	DATE - 1/24/2025	REVISED -	

STATE OF ILLINOIS
DEPARTMENT OF TRANSPORTATION

IL ROUTE 53
ITS REMOVAL AND TEMPORARY ITS PLAN

SCALE: 1" = 50' | SHEET OF SHEETS | STA. TO STA.

F.A.P. RTE.	SECTION	COUNTY	TOTAL SHEETS	SHEET NO.
342	2018-100-BR	COOK	1351	658

CONTRACT NO. 62N91

ILLINOIS | FED. AID PROJECT

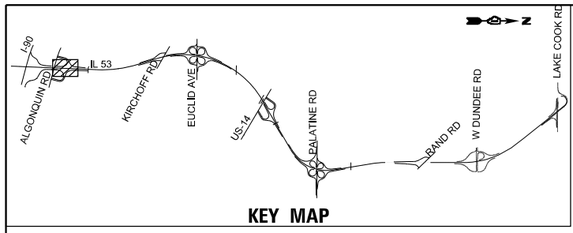

NOTES:

1. TEMPORARY BLUETOOTH DETECTORS SHALL BE INCLUDED IN THE COST OF THE MAINTAINING ITS DURING CONSTRUCTION PAY ITEM. NO ADDITIONAL PAYMENT SHALL BE MADE.

0 50 100 150
SCALE IN FEET

NOTE 2
NOTE 1 (TYP.)
EX. ℄ IL 62
IL 62 (ALGONQUIN ROAD)
IL 53 SB
IL 53 NB
MATCH LINE STA. 1129+50
MATCH LINE STA. 1144+50
EX. ℄ IL 53
℄ EXISTING SB ON RAMP AT IL 62
℄ EXISTING SB OFF RAMP AT IL 62
BT-01-09 (MAINLINE), BT-01-10 (RAMP)
- WOOD POLE (I)
- (2) BLUETOOTH (I)
BT-01-11 (RAMP)
- WOOD POLE (I)
- BLUETOOTH (I)
225' REMOVAL OF CABLE IN CONDUIT (R)
235' REMOVAL OF CABLE IN CONDUIT (R)
EXISTING IDOT LIGHTING CONTROLLER "R"
805' REMOVAL OF CABLE IN CONDUIT (R)
175' REMOVAL OF CABLE IN CONDUIT (R)
℄ EXISTING NB OFF RAMP AT IL 62
BT-01-12 (RAMP)
- WOOD POLE (I)
- BLUETOOTH (I)
BT-01-13 (MAINLINE), BT-01-14 (RAMP)
- WOOD POLE (I)
- (2) BLUETOOTH (I)
℄ EXISTING NB ON RAMP AT IL 62

1 REVISED SHEET 02/18/2025

ITS–06

MODEL: Default
FILE NAME: \\60\Projects\22145\04-CADD\CADD_Sheets\Contract 2\New folder\ITS_PLANS\D162N91-C2-Idot-ITS-05.dgn

SINGH
SINGH + ASSOCIATES, INC.
CONSULTING ENGINEERS

USER NAME = vnunez	DESIGNED - SG	REVISED - 1 02/18/2025	
	DRAWN - MAG/VN	REVISED -	
PLOT SCALE = 100.0000 ' / in.	CHECKED - RP	REVISED -	
PLOT DATE = 2/18/2025	DATE - 1/24/2025	REVISED -	

STATE OF ILLINOIS
DEPARTMENT OF TRANSPORTATION

IL ROUTE 53
ITS REMOVAL AND TEMPORARY ITS PLAN

SCALE: 1" = 50' | SHEET OF SHEETS | STA. TO STA.

F.A.P. RTE.	SECTION	COUNTY	TOTAL SHEETS	SHEET NO.
342	2018-100-BR	COOK	1351	659
		CONTRACT NO. 62N91		
		ILLINOIS	FED. AID PROJECT	

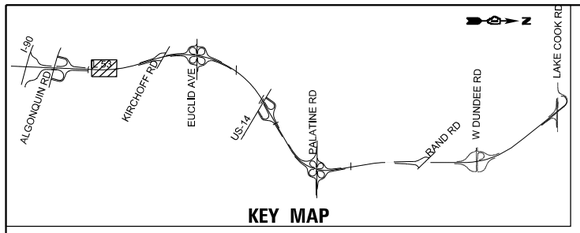

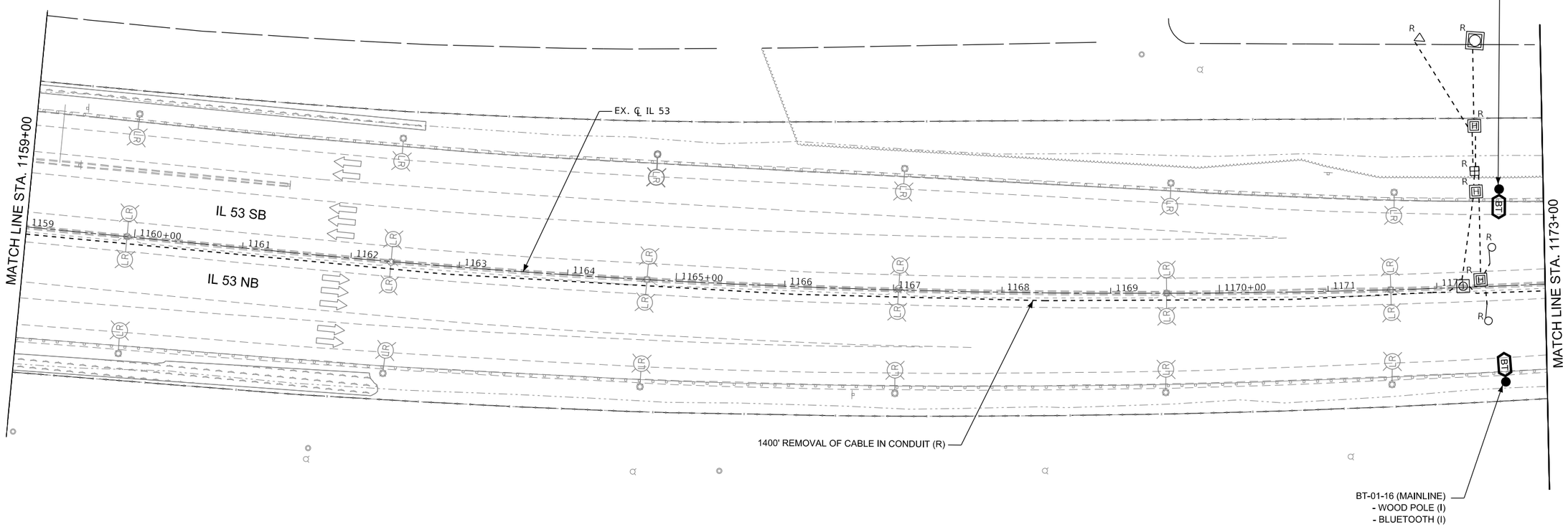

NOTES:

1. TEMPORARY BLUETOOTH DETECTORS SHALL BE INCLUDED IN THE COST OF THE MAINTAINING ITS DURING CONSTRUCTION PAY ITEM. NO ADDITIONAL PAYMENT SHALL BE MADE.

1 REVISED SHEET 02/18/2025

ITS–08

SINGH
SINGH + ASSOCIATES, INC.
CONSULTING ENGINEERS

USER NAME = vnunez	DESIGNED - SG	REVISED - 1 02/18/2025	
	DRAWN - MAG/VN	REVISED -	
PLOT SCALE = 100.0000 ' / in.	CHECKED - RP	REVISED -	
PLOT DATE = 2/18/2025	DATE - 1/24/2025	REVISED -	

STATE OF ILLINOIS
DEPARTMENT OF TRANSPORTATION

IL ROUTE 53
ITS REMOVAL AND TEMPORARY ITS PLAN

SCALE: 1"=50' | SHEET OF SHEETS | STA. TO STA.

F.A.P. RTE.	SECTION	COUNTY	TOTAL SHEETS	SHEET NO.
342	2018-100-BR	COOK	1351	661
		CONTRACT NO. 62N91		
		ILLINOIS	FED. AID PROJECT	

MODEL: Default
FILE NAME: \\fs01\Projects\2214S\04_CADD\CADD_Sheets\Contract 2\New folder\ITS PLANS\D162N91-C2-Route-sht-its-07.dgn

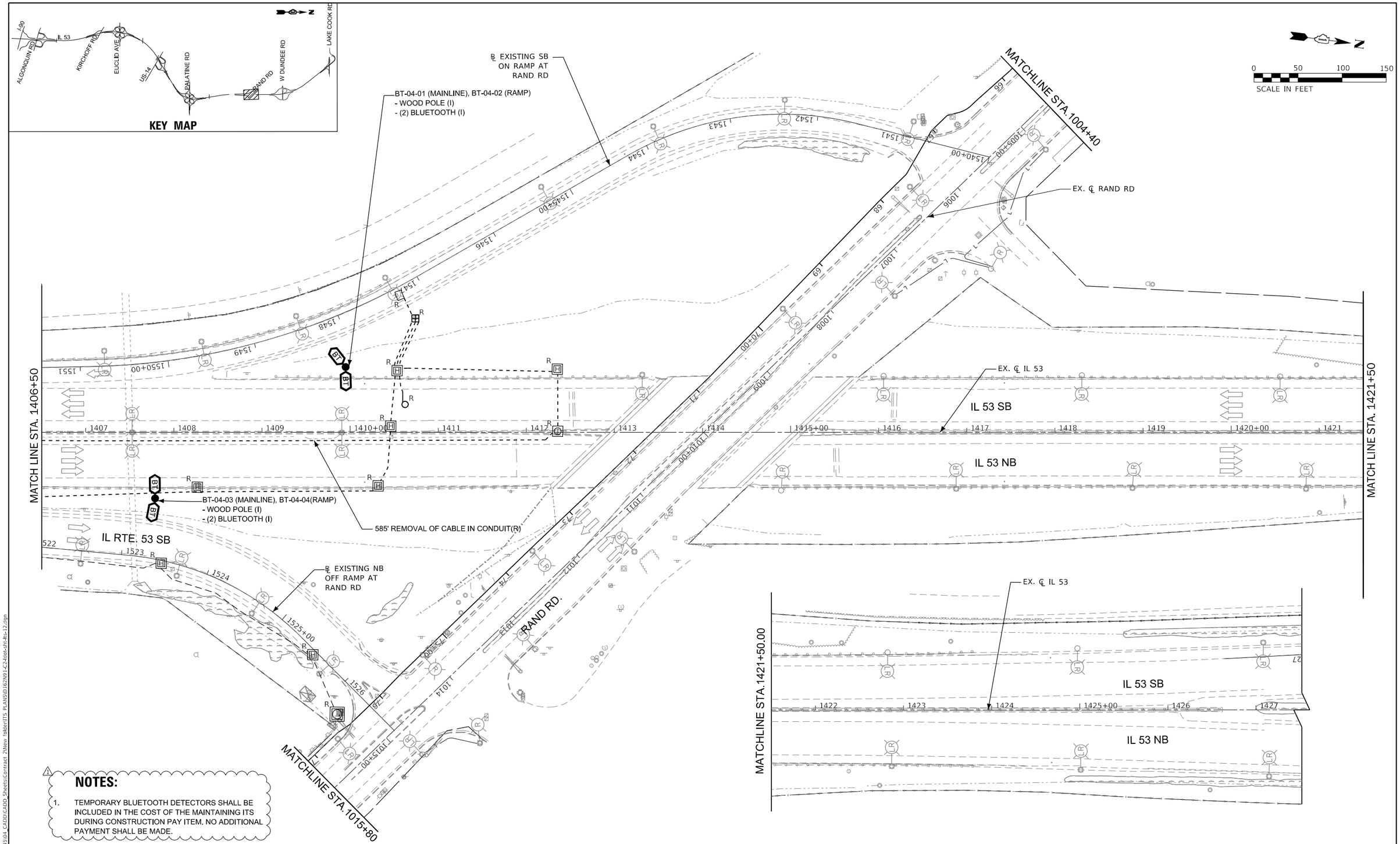

NOTES:

1. TEMPORARY BLUETOOTH DETECTORS SHALL BE INCLUDED IN THE COST OF THE MAINTAINING ITS DURING CONSTRUCTION PAY ITEM. NO ADDITIONAL PAYMENT SHALL BE MADE.

1 REVISED SHEET 02/18/2025

ITS–13

MODEL: Default
FILE NAME: \\f601\Projects\2214\04-CADD\CADD_Sheets\Contract 2\New folder\ITS PLANS\D162N91-C2-dot-sht-its-12.dgn

SINGH
SINGH + ASSOCIATES, INC.
CONSULTING ENGINEERS

USER NAME = vnunez	DESIGNED - SG	REVISED - 1 02/18/2025	
	DRAWN - MAG/VN	REVISED -	
PLOT SCALE = 100.0000 ' / in.	CHECKED - RP	REVISED -	
PLOT DATE = 2/18/2025	DATE - 1/24/2025	REVISED -	

STATE OF ILLINOIS
DEPARTMENT OF TRANSPORTATION

IL ROUTE 53
ITS REMOVAL AND TEMPORARY ITS PLAN

SCALE: 1" = 50' | SHEET OF SHEETS | STA. 1406+50.00 TO STA. 1427+00.00

F.A.P. RTE.	SECTION	COUNTY	TOTAL SHEETS	SHEET NO.
342	2018-100-BR	COOK	1351	666
		CONTRACT NO. 62N91		
		ILLINOIS	FED. AID PROJECT	

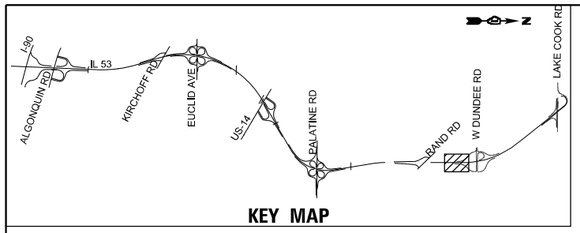

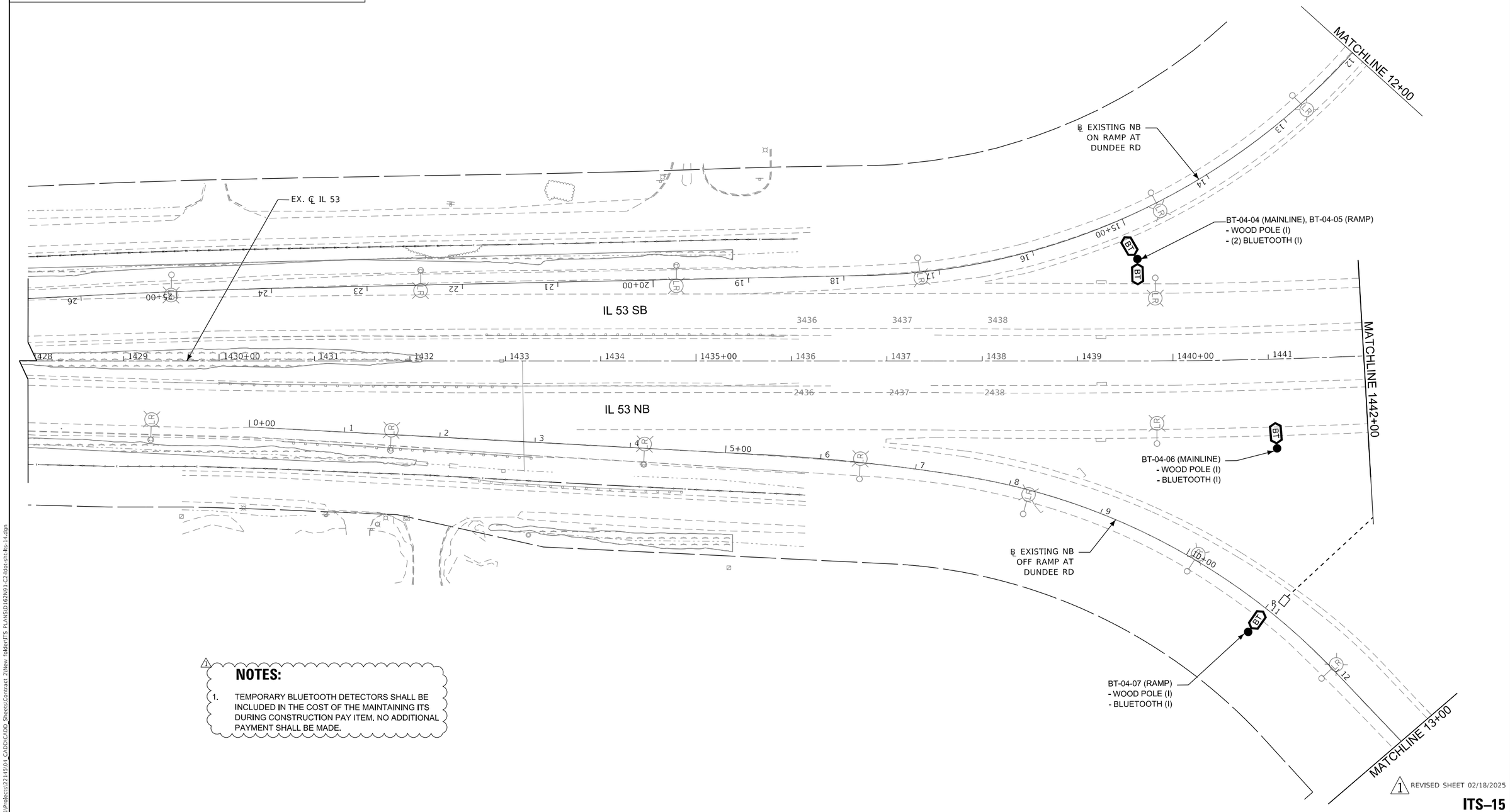

NOTES:

1. TEMPORARY BLUETOOTH DETECTORS SHALL BE INCLUDED IN THE COST OF THE MAINTAINING ITS DURING CONSTRUCTION PAY ITEM. NO ADDITIONAL PAYMENT SHALL BE MADE.

1 REVISED SHEET 02/18/2025

ITS–15

MODEL: Default
FILE NAME: \\cg1\Projects\22145104_CADD\CADD_Sheets\Contract 2\New folder\ITS PLANS\D162N91-C2-dot-ith-its-14.dgn

SINGH
SINGH + ASSOCIATES, INC.
CONSULTING ENGINEERS

USER NAME = vnunez	DESIGNED - SG	REVISED - 1 02/18/2025	
	DRAWN - MAG/VN	REVISED -	
PLOT SCALE = 100.0000 ' / in.	CHECKED - RP	REVISED -	
PLOT DATE = 2/18/2025	DATE - 1/24/2025	REVISED -	

STATE OF ILLINOIS
DEPARTMENT OF TRANSPORTATION

IL ROUTE 53
ITS REMOVAL AND TEMPORARY ITS PLAN

SCALE: 1" = 50' | SHEET OF SHEETS | STA. TO STA.

F.A.P. RTE.	SECTION	COUNTY	TOTAL SHEETS	SHEET NO.
342	2018-100-BR	COOK	1351	670
		CONTRACT NO. 62N91		
	ILLINOIS	FED. AID PROJECT		

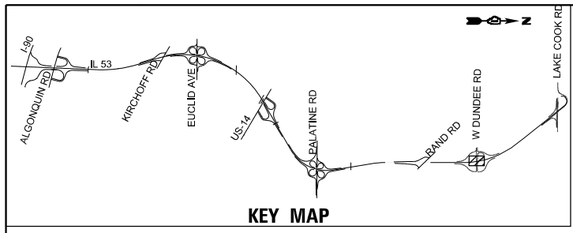

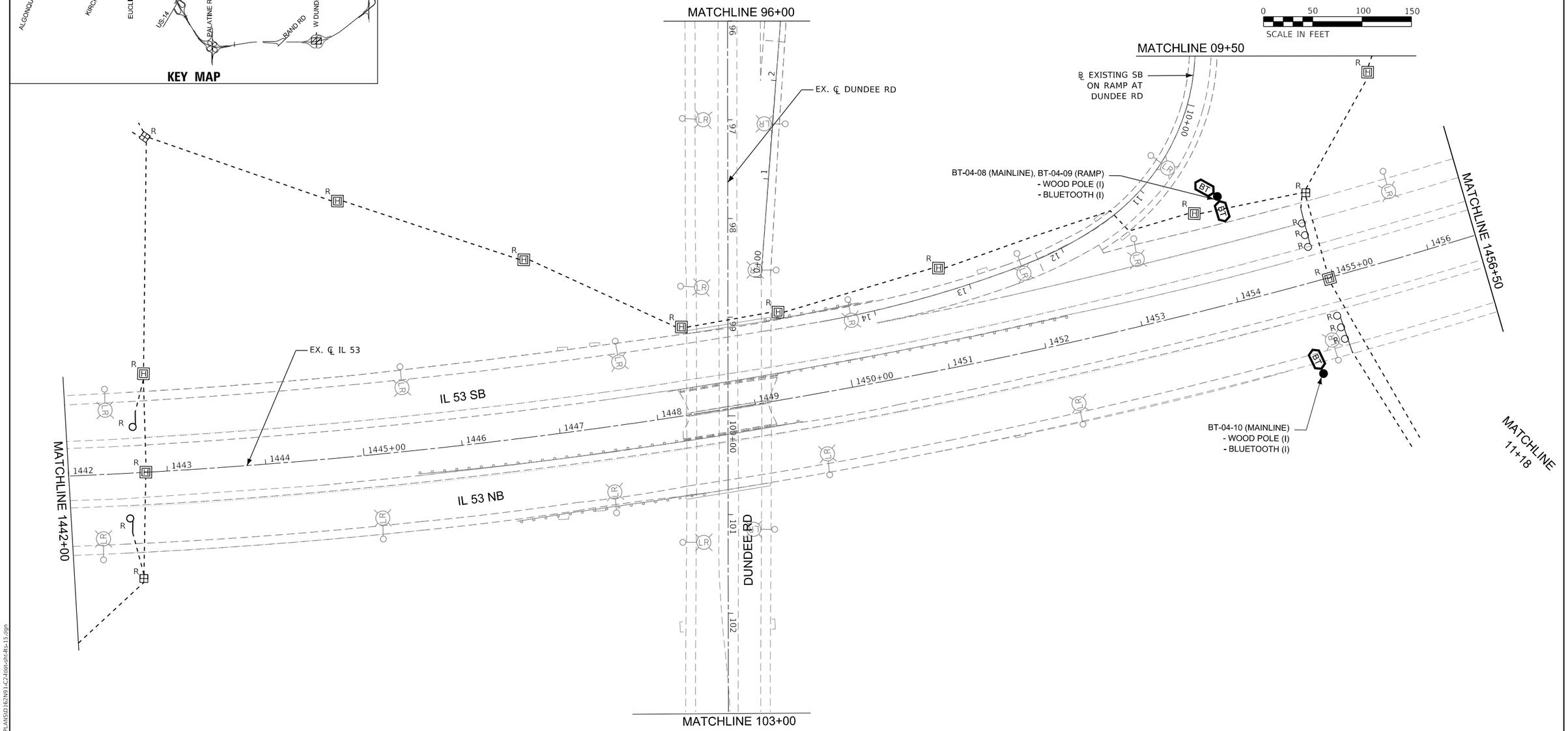

NOTES:

1. TEMPORARY BLUETOOTH DETECTORS SHALL BE INCLUDED IN THE COST OF THE MAINTAINING ITS DURING CONSTRUCTION PAY ITEM. NO ADDITIONAL PAYMENT SHALL BE MADE.

1 REVISED SHEET 02/18/2025

ITS–16

MODEL: Default
FILE NAME: \\fs01\Projects\22145\04_CADD\CADD_Sheets\Contract 2\New folder\ITS PLANS\D162N91-C2-Root-sht-its-15.dgn

SINGH
SINGH + ASSOCIATES, INC.
CONSULTING ENGINEERS

USER NAME = vnunez	DESIGNED - SG	REVISED - 1 02/18/2025	
	DRAWN - MAG/VN	REVISED -	
PLOT SCALE = 100.0000 ' / in.	CHECKED - RP	REVISED -	
PLOT DATE = 2/18/2025	DATE - 1/24/2025	REVISED -	

STATE OF ILLINOIS
DEPARTMENT OF TRANSPORTATION

IL ROUTE 53
ITS REMOVAL AND TEMPORARY ITS PLAN

SCALE: 1"=50' | SHEET OF SHEETS | STA. TO STA.

F.A.P. RTE.	SECTION	COUNTY	TOTAL SHEETS	SHEET NO.
342	2018-100-BR	COOK	1351	669
		CONTRACT NO. 62N91		
		ILLINOIS	FED. AID PROJECT	

KEY MAP

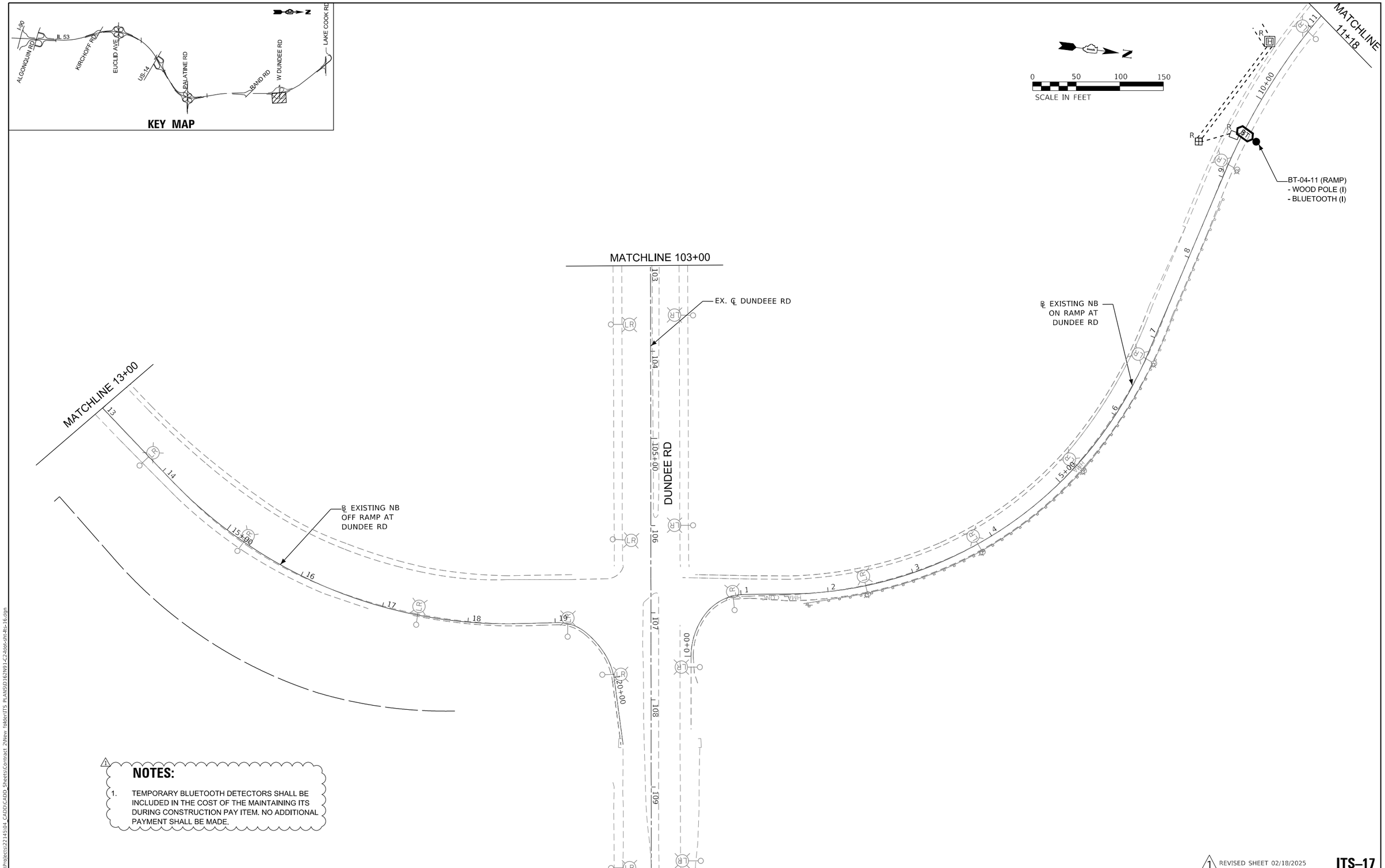

NOTES:

1. TEMPORARY BLUETOOTH DETECTORS SHALL BE INCLUDED IN THE COST OF THE MAINTAINING ITS DURING CONSTRUCTION PAY ITEM. NO ADDITIONAL PAYMENT SHALL BE MADE.

1 REVISED SHEET 02/18/2025

ITS–17

MODEL: Default
FILE NAME: \\fs01\Projects\22145\04_CADD\CADD_Sheets\Contract 2\New folder\ITS PLANS\D162N91-C2-foot-sht-its-16.dgn

SINGH
SINGH + ASSOCIATES, INC.
CONSULTING ENGINEERS

USER NAME = vnunez	DESIGNED - SG	REVISED - 1 02/18/2025	
	DRAWN - MAG/VN	REVISED -	
PLOT SCALE = 100.0000 ' / in.	CHECKED - RP	REVISED -	
PLOT DATE = 2/18/2025	DATE - 1/24/2025	REVISED -	

STATE OF ILLINOIS
DEPARTMENT OF TRANSPORTATION

IL ROUTE 53
ITS REMOVAL AND TEMPORARY ITS PLAN

SCALE: 1" = 50' | SHEET OF SHEETS | STA. TO STA.

F.A.P. RTE.	SECTION	COUNTY	TOTAL SHEETS	SHEET NO.
342	2018-100-BR	COOK	1351	670
		CONTRACT NO. 62N91		
	ILLINOIS	FED. AID PROJECT		

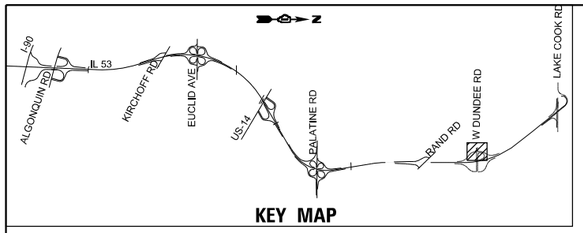

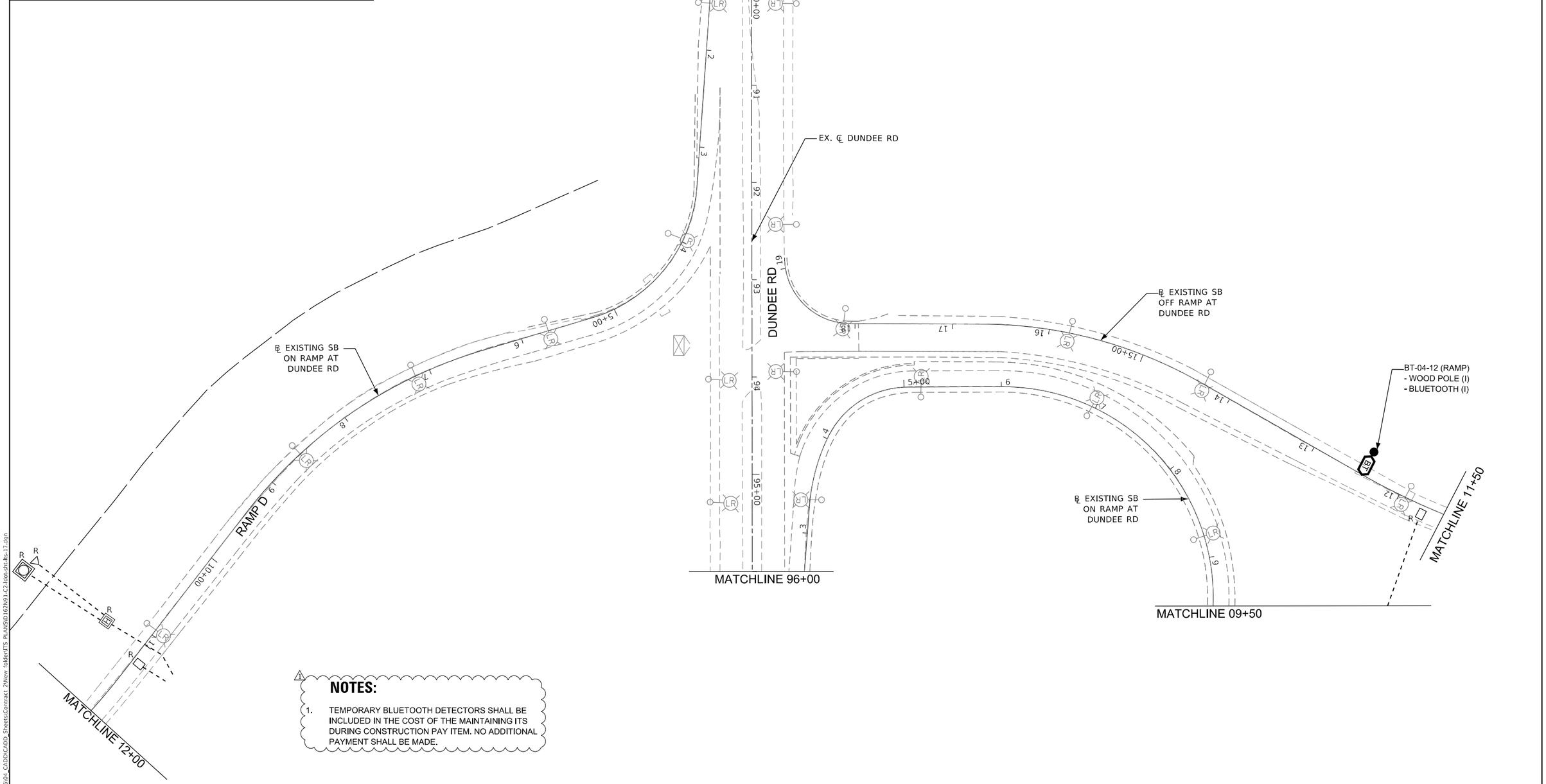

NOTES:

1. TEMPORARY BLUETOOTH DETECTORS SHALL BE INCLUDED IN THE COST OF THE MAINTAINING ITS DURING CONSTRUCTION PAY ITEM. NO ADDITIONAL PAYMENT SHALL BE MADE.

1 REVISED SHEET 02/18/2025

ITS–18

MODEL: Default
FILE NAME: \\fg01\Projects\22145\04_CADD\CADD_Sheets\Contract 2\New folder\ITS PLANS\D162N91-C2-Hot-sht-ITS-17.dgn

SINGH
SINGH + ASSOCIATES, INC.
CONSULTING ENGINEERS

USER NAME = vnunez	DESIGNED - SG	REVISED - 1 02/18/2025	
	DRAWN - MAG/VN	REVISED -	
PLOT SCALE = 100.0000 ' / in.	CHECKED - RP	REVISED -	
PLOT DATE = 2/18/2025	DATE - 1/24/2025	REVISED -	

STATE OF ILLINOIS
DEPARTMENT OF TRANSPORTATION

IL ROUTE 53
ITS REMOVAL AND TEMPORARY ITS PLAN

SCALE: 1"=50' | SHEET OF SHEETS | STA. TO STA.

F.A.P. RTE.	SECTION	COUNTY	TOTAL SHEETS	SHEET NO.
342	2018-100-BR	COOK	1351	671
		CONTRACT NO. 62N91		
	ILLINOIS	FED. AID PROJECT		

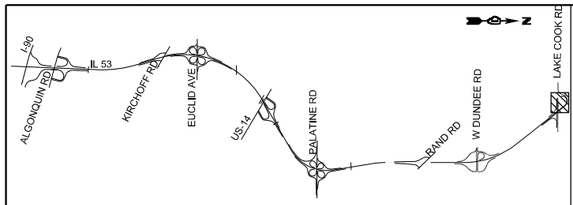

KEY MAP

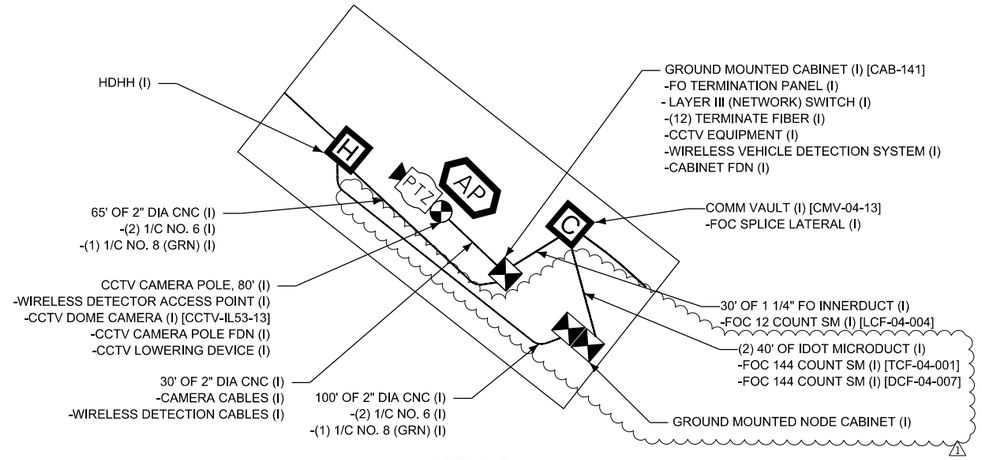

DETAIL D
NOT TO SCALE

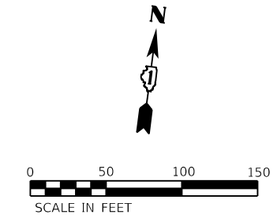

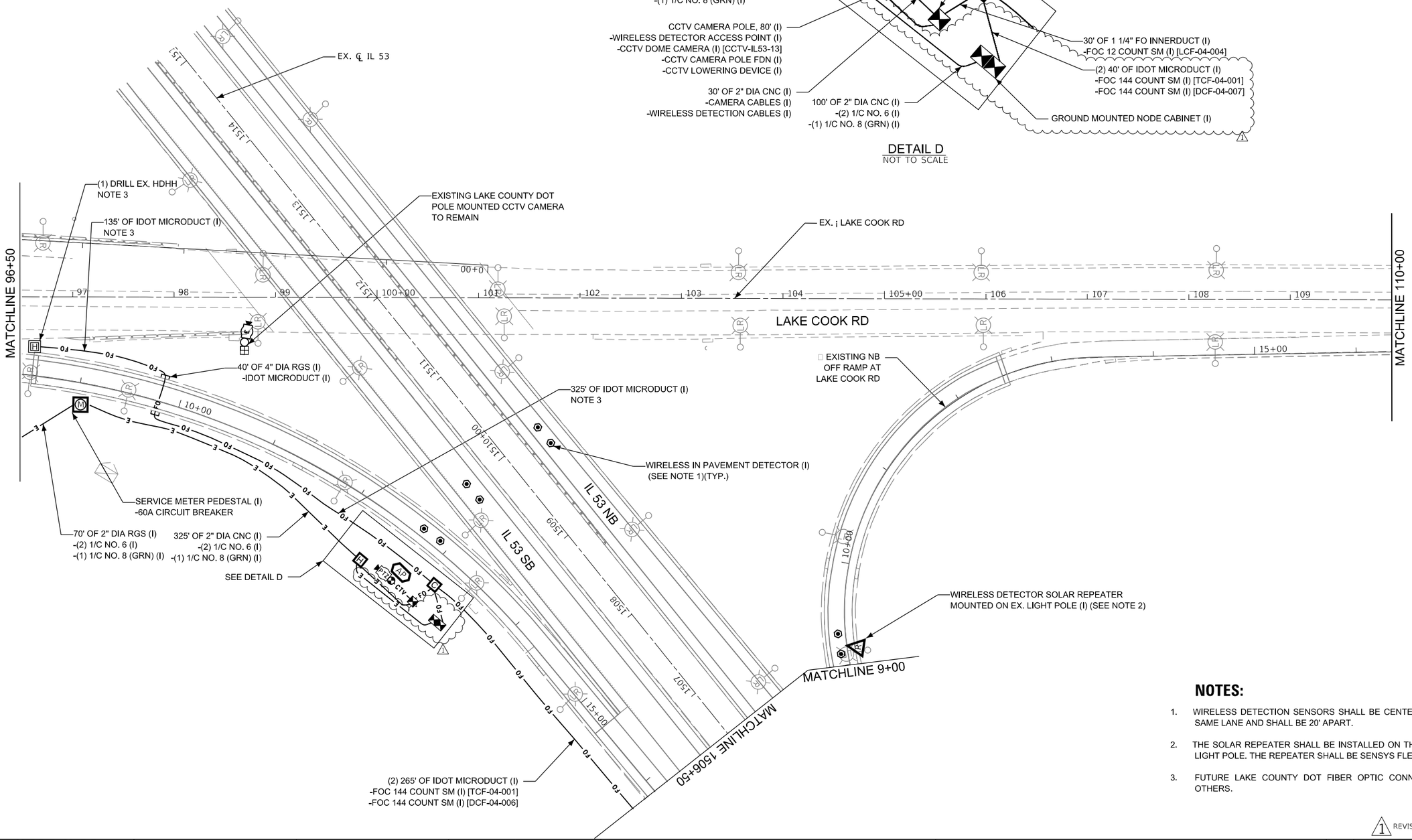

NOTES:

1. WIRELESS DETECTION SENSORS SHALL BE CENTERED IN THE SAME LANE AND SHALL BE 20' APART.
2. THE SOLAR REPEATER SHALL BE INSTALLED ON THE EXISTING LIGHT POLE. THE REPEATER SHALL BE SENSYS FLEX-FPT3-SLR.
3. FUTURE LAKE COUNTY DOT FIBER OPTIC CONNECTION BY OTHERS.

1 REVISED SHEET 02/18/2025

ITS–48

MODEL: Default
FILE NAME: \\6911\Projects\22145\04_CADD\CADD_Sheets\Contract 2\New folder\ITS PLANS\D162N91-C2-ito-sht-ts-17.dgn

SINGH
SINGH + ASSOCIATES, INC.
CONSULTING ENGINEERS

USER NAME = vnunez	DESIGNED - SG	REVISED - 1 02/18/2025	
	DRAWN - MAG/VN	REVISED -	
PLOT SCALE = 100.0000 ' / in.	CHECKED - RP	REVISED -	
PLOT DATE = 2/18/2025	DATE - 1/24/2025	REVISED -	

STATE OF ILLINOIS
DEPARTMENT OF TRANSPORTATION

IL ROUTE 53
ITS INSTALLATION PLAN

SCALE: 1" = 50' | SHEET OF SHEETS | STA. TO STA.

F.A.P. RTE.	SECTION	COUNTY	TOTAL SHEETS	SHEET NO.
342	2018-100-BR	COOK	1351	701

CONTRACT NO. 62N91

ILLINOIS | FED. AID PROJECT

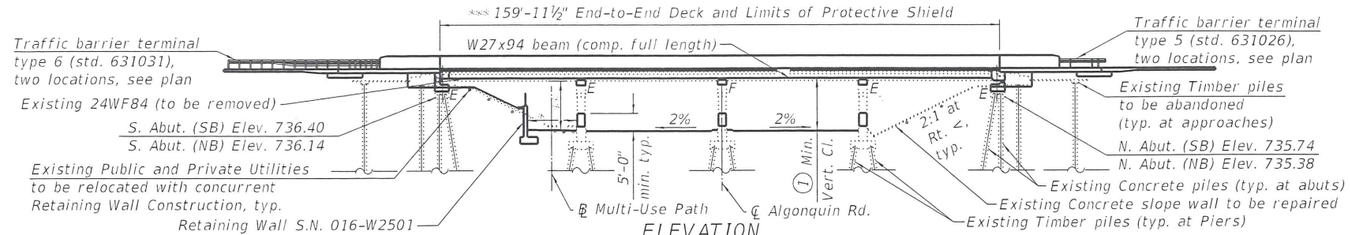

ELEVATION

* 14'-0" Multi-Use path
** 12'-11⅜" for S.N. 016-0378 Min. Vert. Cl.
13'-0⅝" for S.N. 016-2133 Min. Vert. Cl.
*** Sta. 2132+33.04 to 2133+93.01 (NB) & Sta. 3132+49.97 to 3134+09.97 (SB) Min. Vert. Cl. 15'-1¾" for S.N. 016-0378
① Min. Vert. Cl. 14'-11⅛" for S.N. 016-2133

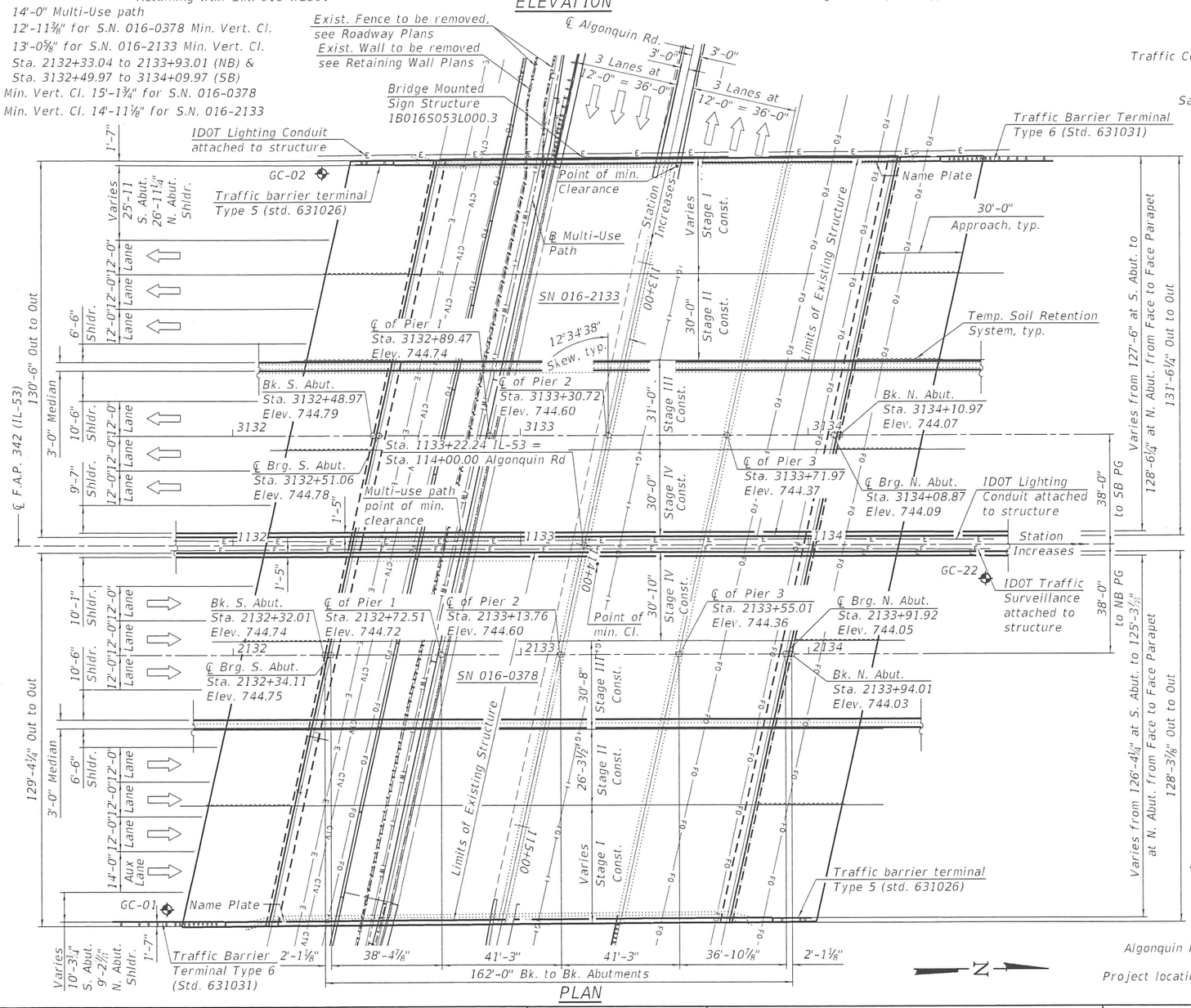

PLAN

Benchmark: BM 38 Elev. 736.249. Cut cross on the East side of the third concrete light pole foundation North of Algonquin Rd, and just West of the Southbound entrance ramp to IL Rte. 53.

Existing Structure: Structure Numbers 016-0378 and 016-2133 (NB IL-53 and SB IL-53 respectively) were originally built in 1962 as FA Route 61, under Section 531-1-H(B-F)-5. The existing bridges consist of side by side four-span continuous steel superstructures with a 7" reinforced concrete deck supported by multi-column pier and stub abutments. The back-to-back abutment measures 162'-2". The out-to-out bridge deck measure varies from 130'-4" to 131'-4 1/4" for SN 016-2133 and from 127'-10 7/8" to 126'-7 3/4" for SN 016-0378 South to North Abutment. In 1971 the deck was patched and a bituminous overlay was placed. In 1991, the expansion joints and parapets were reconstructed, deck repairs were performed, and the overlay was replaced with microsilica concrete. In 2000 the abutment bearings were replaced with elastomeric type bearings. In 2010, the deck was patched, and concrete sealer was added to the deck surface. The expansion joints were cleaned and replaced with silicone joint sealer.

Traffic Control: Traffic is to be maintained utilizing staged construction. Entrance and exit ramps to remain open during construction.

Salvage: None

NATHAN D. RICK 081-005819 LICENSED STRUCTURAL ENGINEER OF ILLINOIS

Nathan D. Rick, S.E.
Licensed Structural Engineer
State of Illinois No. 081-007039
Registration Expires 11/30/2026
DATE: 2/11/2025

APPROVED
For Structural Adequacy Only
Engineer of Bridges & Structures

STA. 1133+22.24 REBUILT 202X BY STATE OF ILLINOIS F.A.P. RTE 342 SEC. 2018-100-BR LOADING HL-93 STR. NO. 016-0378	STA. 1133+22.24 REBUILT 202X BY STATE OF ILLINOIS F.A.U. RTE 342 SEC. 2018-100-BR LOADING HL-93 STR. NO. 016-2133

NAME PLATE
(See Std. 515001 and Note 2)

DESIGN SPECIFICATIONS

2002 AASHTO Standard Specifications for Highway Bridges, 17th Edition (Existing Construction)
2020 AASHTO LRFD Bridge Design Specifications, 9th Edition with Interims
2006 Seismic Retrofitting Manual for Highway Structures: Part 1 - Bridges (FHWA-HRT-06-032)

EXISTING CONSTRUCTION LOADING HS20-44

NEW CONSTRUCTION LOADING HL-93

Allow 25#/sq. ft. for future wearing surface.

SEISMIC DATA

Seismic Retrofit Category (SRC) = A
Seismic Performance Zone (SPZ) = 1
Design Spectral Acceleration at 1.0 sec. (SD1) = 0.083g
Design Spectral Acceleration at 0.2 sec. (SDS) = 0.145g
Soil Site Class = D

DESIGN STRESSES

FIELD UNITS

f'c = 3,500 psi (Substructure)
f'c = 4,000 psi (Superstructure)
fy = 60,000 psi (Reinforcement)
fy = 50,000 psi (M270 Grade 50)

FIELD UNITS (EXISTING CONSTRUCTION)

f'c = 1,400 psi (Substructure)
fs = 20,000 psi (Reinforcement)

LEGEND

- FO — Fiber Optic
- CTV — Cable TV
- E — Electric
- G — Gas
- W — Water
- Existing Fence
- Soil Boring

Notes:
1. Up to ¼" to be ground off the bridge deck and the bridge approach slabs. The profile grade shows the final elevations after grinding.
2. Existing Name Plates shall be cleaned and relocated next to the new Name Plates. Cost included with Name Plates.
3. All Structural Steel to be galvanized.

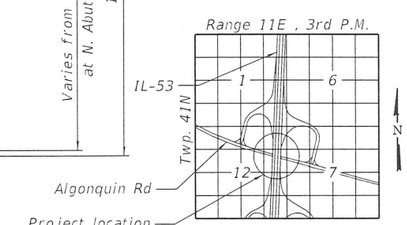

LOCATION SKETCH

GENERAL PLAN AND ELEVATION
F.A.P. 342 (IL-53) OVER ALGONQUIN ROAD (IL-62)
SECTION 2018-100-BR
COOK COUNTY
STA. 1133+22.24
STRUCTURE NO. 016-0378 (NB)
STRUCTURE NO. 016-2133 (SB)

STRAND ASSOCIATES
1170 SOUTH HOUBOLT ROAD
JOLIET, ILLINOIS 60431
(815) 744-4200
IDFPR NO. 184-001273

USER NAME = CodyH	DESIGNED - TJE	REVISED -	
	CHECKED - NDR	REVISED -	
PLOT SCALE = 0:2.0000 ':' / in.	DRAWN - CJH	REVISED -	
PLOT DATE = 2/11/2025	CHECKED - TJE	REVISED -	

STATE OF ILLINOIS
DEPARTMENT OF TRANSPORTATION

GENERAL PLAN AND ELEVATION
STRUCTURE NO. 016-0378 (NB) AND 016-2133 (SB)
SHEET 1 OF 80 SHEETS

F.A.P. RTE.	SECTION	COUNTY	TOTAL SHEETS	SHEET NO.
342	2018-100-BR	COOK	1351	748
		CONTRACT NO. 62N91		
		ILLINOIS	FED. AID PROJECT	

MODEL: Default
FILE NAME: S:\IOL\6300-6399\6346\113\Drawings\CAD\Micro-SS4\CAD_Sheets\01603782133-C2-001-GPE-S4.dgn
2/11/2025 8:54:49 AM

GENERAL NOTES

1. Fasteners shall be ASTM F 3125 Grade A325 Type 1, Fasteners shall be hot dip galvanized. See Special Provisions for "Hot Dip Galvanizing for Structural Steel." Bolts 7/8" diameter, holes 15/16" diameter, unless otherwise noted.

2. Calculated weight of Structural Steel = 666,860 lbs (Grade 50)
   = 116,150 lbs (Grade 36)

3. All structural steel shall be AASHTO M270 Grade 50 or Grade 36 and shall be galvanized. See Special Provision for "Hot Dip Galvanizing for Structural Steel."

4. No field welding is permitted except as specified in the contract documents.

5. Reinforcement bars designated (E) shall be epoxy coated.

6. The finishing machine rails shall be placed on the top of the top flange of the exterior beams within the deck pour. Beam blocks shall be placed between beams at all tie locations in each bay for the full width of the deck pour.

7. Bearing seat surfaces shall be constructed or adjusted to the designated elevations within a tolerance of 1/8 in. (0.01 ft.). Adjustment shall be made either by grinding the surface or by shimming the bearings.

8. Plan dimensions and details relative to the existing structure have been taken from existing plans are subject to nominal construction variations. The Contactor shall field verify existing dimensions and details affecting new construction and make necessary approved adjustments prior to construction or ordering of materials. Such variations shall not be cause for additional compensation for a change in scope of the work, however, the Contractor will be paid for the quantity actually furnished at the unit price bid for the work.

9. The existing structural steel coating contains lead. The Contractor shall take appropriate precautions to address the presence of lead on this project.

10. Concrete surfaces that are to recieve the textured form liner treatment shall also be tinted according to the special provision for "Concrete Color Additive". The revealed and exposed formed textured surface shall recieve the application of "Concrete Sealant (Special)". All other surfaces to receive application of Protective Coat.

11. An existing debris shield is present full length of Span 2 and 3. The staged removal of this debris shield is to be performed concurrently with the staged removal of the superstructures. This work will not be individually measured for payment but is considered to be inlcuded with the cost of "Removal of Existing Superstructures No. 1 and No. 2."

12. A film forming Concrete Sealer shall be applied to horizontal surfaces to the designated area of the new pier infills. A penetrating Concrete Sealer shall be applied to vertical surfaces to the designated area of the new and existing concrete 5 ft. above grade.

INDEX OF SHEETS

TOTAL BILL OF MATERIALS

Pay Item Name	Unit	Super	Sub	Total
Removal of Existing Superstructures No. 1	EACH	1		1
Removal of Existing Superstructures No. 2	EACH	1		1
Concrete Removal	CU YD		245.0	245.0
Protective Shield	SQ YD	4,564		4,564
Structure Excavation	CU YD		1,471	1,471
Concrete Structures	CU YD		695.7	695.7
Concrete Superstructure	CU YD	1,467.2		1,467.2
Protective Coat	SQ YD	7,041		7,041
Concrete Superstructure (Approach Slab)	CU YD	720.5		720.5
Furnishing and Erecting Structural Steel	L SUM	1		1
Stud Shear Connectors	EACH	38,442		38,442
Reinforcement Bars, Epoxy Coated	POUND	627,530	71,840	699,370 1
Bar Splicers	EACH	4,644		4,644
Mechanical Splicers	EACH	108	269	377
Slope Wall 4 Inch	SQ YD		714	714
Name Plates	EACH	2		2
Elastomeric Bearing Assembly, Type I	EACH	172		172
Anchor Bolts, 1"	EACH	430		430
Temporary Soil Retention System	SQ FT		797	797 1
Granular Backfill for Structures	CU YD		1,121	1,121
Concrete Sealer	SQ FT		9,144	9,144
Geocomposite Wall Drain	SQ YD		449	449
Pipe Underdrains for Structures 4"	FOOT		609	609
Slope Wall Crack Sealing	FOOT		1,938	1,938
Concrete Color Additive	CU YD	61.9		61.9
Bridge Deck Grooving (Longitudinal)	SQ YD	5,841		5,841
Form Liner Textured Surface (Special)	SQ FT	1,318		1,318
Bar Terminators	EACH	1,910		1,910
Fence Removal	FOOT		196	196
Architectural Form Liner	SQ YD	4		4
Structural Repair of Concrete (Depth Equal to or Less Than 5 Inches)	SQ FT		286	286
Structural Repair of Concrete (Depth Greater Than 5 Inches)	SQ FT		12	12
Diamond Grinding (Bridge Section)	SQ YD	5,647		5,647
Slope Wall Repair	SQ YD		139	139
Concrete Sealant (Special)	SQ FT	122		122

SCOPE OF WORK

1. Completely remove and replace existing superstructures and all bearings.
2. Convert existing stub abutments to semi-integral type abutments.
3. Temporarily support all utilities and reattach to bridge.
4. Construct new fully composite concrete superstructure with 44" tall concrete barriers.
5. Construct concrete pier infills and cap extensions, and reconstruct wing walls.
6. Construct new approach slabs.
7. Repair substructures using "Structural Repair of Concrete".
8. Construct muli-use path and retaining wall.
9. Remove and replace sign structure for Eastbound Algonquin Rd.

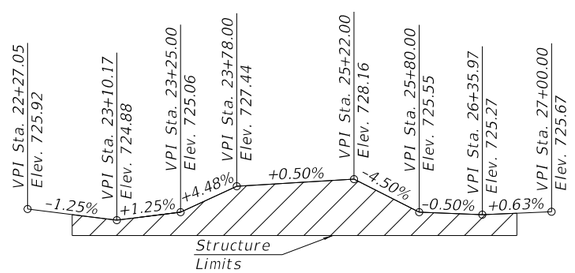

MULTI-USE PATH PROFILE GRADE
(Along ℄)

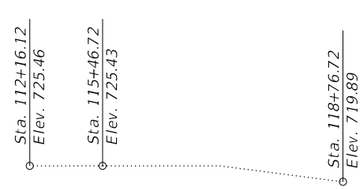

ALGONQUIN PROFILE GRADE
(Based on Existing Survey)

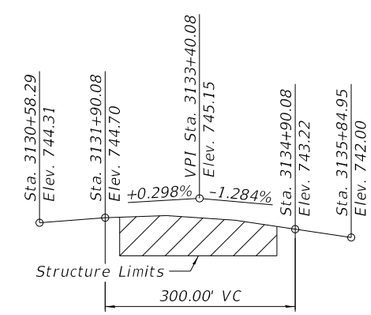

IL-53 SB PROFILE GRADE

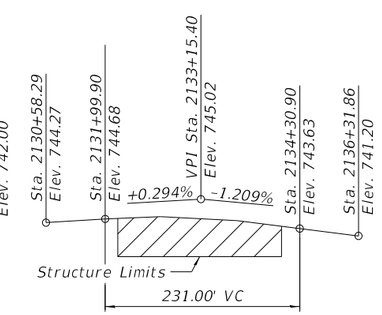

IL-53 NB PROFILE GRADE

Note: The IL-53 Profile Grades show the final grade after grinding.

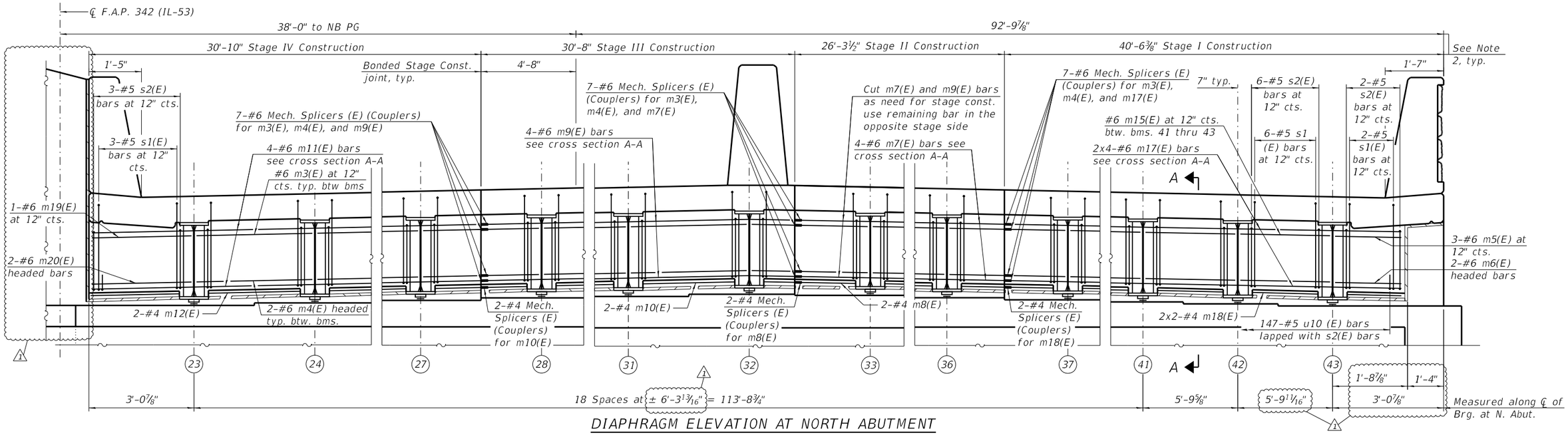

DIAPHRAGM ELEVATION AT NORTH ABUTMENT

(Looking North)

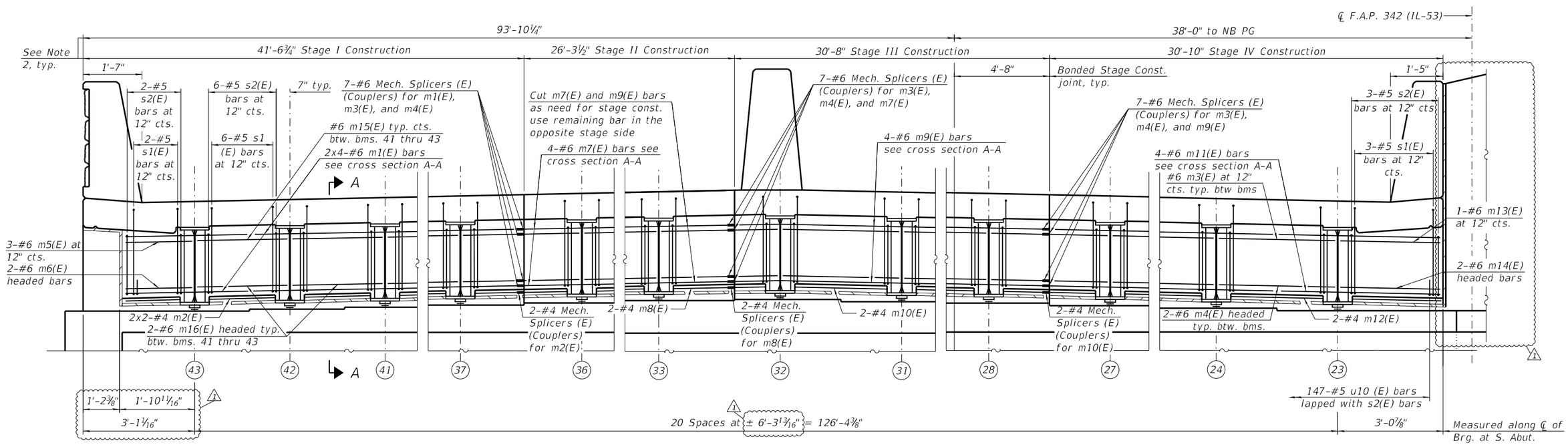

DIAPHRAGM ELEVATION AT SOUTH ABUTMENT

(Looking South)

All dimensions and reinforcement bar spacings are measured perpendicular to PG unless noted otherwise.

MINIMUM BAR LAP

#4 Bar = 2'-5"
#6 Bar = 4'-10"

Notes:
1. See Sheet 36 of 80 for Cross section and details.
2. Measured at respective end of deck, See Deck Plan.

STRAND ASSOCIATES®
1170 SOUTH HOUBOLT ROAD
JOLIET, ILLINOIS 60431
(815) 744-4200
IDFPR NO. 184-001273

USER NAME = CodyH	DESIGNED - TJE	REVISED - 1 02/18/2025	
	CHECKED - NDR	REVISED -	
PLOT SCALE = 0:2.0000 ':" / in.	DRAWN - CJH	REVISED -	
PLOT DATE = 2/17/2025	CHECKED - TJE	REVISED -	

STATE OF ILLINOIS
DEPARTMENT OF TRANSPORTATION

SEMI-INTEGRAL DIAPHRAGM
STRUCTURE NO. 016-0378 (NB)

SHEET 34 OF 80 SHEETS

F.A.P. RTE.	SECTION	COUNTY	TOTAL SHEETS	SHEET NO.
342	2018-100-BR	COOK	1351	781
		CONTRACT NO. 62N91		
	ILLINOIS	FED. AID PROJECT		

MODEL: Default
FILE NAME: S:\IOL\6300-6399\6246113\Drawings\CAD\Micros-SS4\CAD_Sheets\0160378213 3-C2-034-SID1-SA1.dgn
2/17/2025 5:00:07 PM

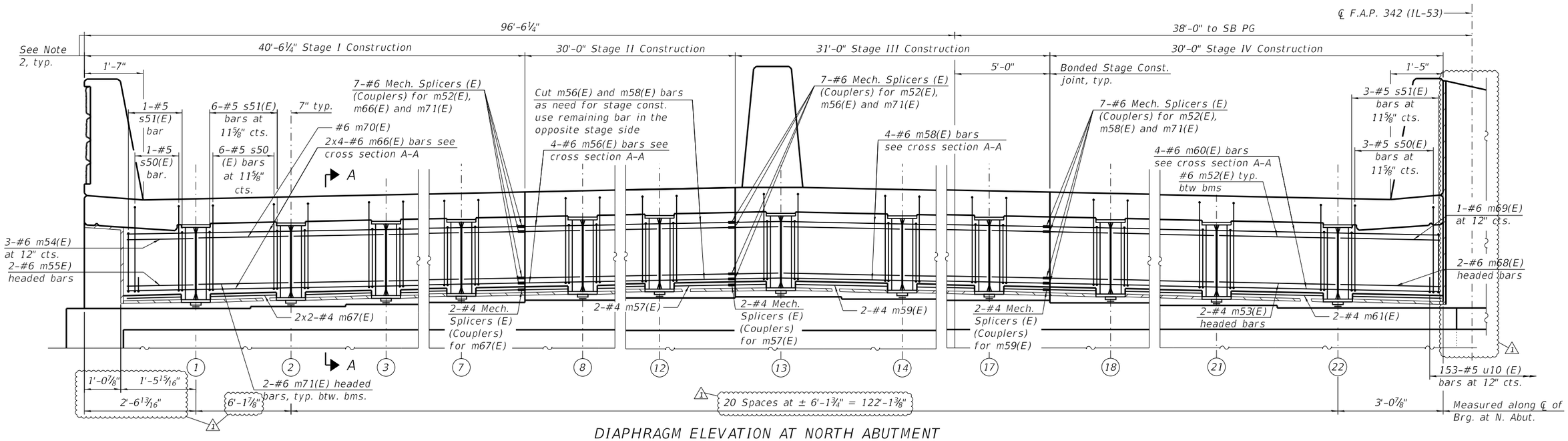

DIAPHRAGM ELEVATION AT NORTH ABUTMENT

(Looking North)

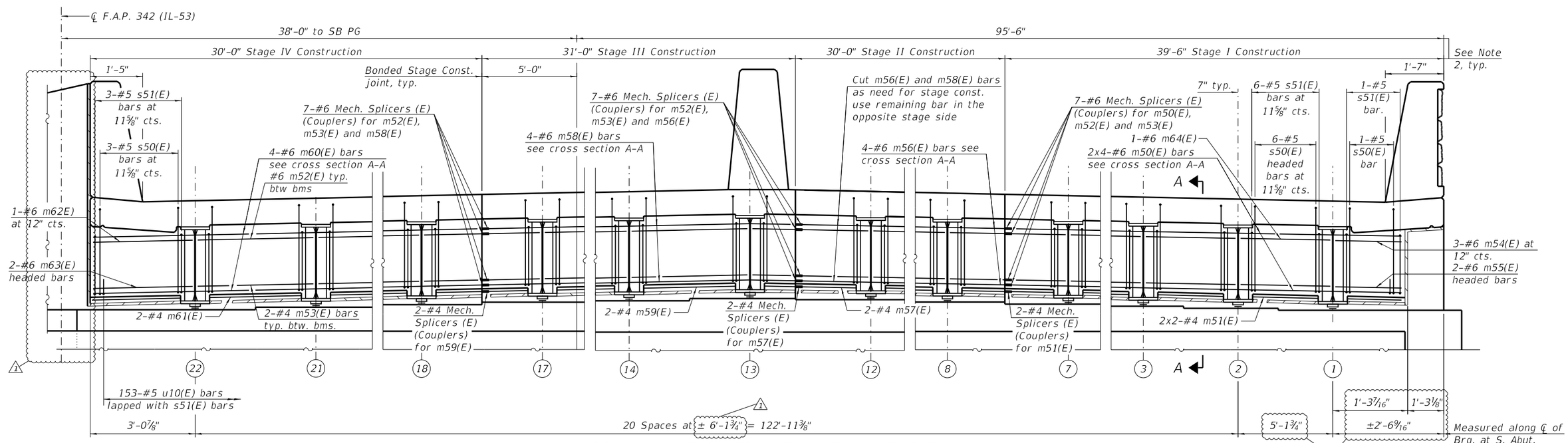

DIAPHRAGM ELEVATION AT SOUTH ABUTMENT

(Looking South)

All dimensions and reinforcement bar spacings are measured perpendicular to PG unless noted otherwise.

MINIMUM BAR LAP

#4 Bar = 2'-5"
#6 Bar = 4'-10"

Notes:
1. See Sheet 36 of 80 for Cross section and details.
2. Measured at respective end of decl, see Deck Plans.

MODEL: Default
FILE NAME: S:\IOL\6300-6399\6346\113\Drawings\CAD\Micros-SS4\CAD_Sheets\0160378213 3-C2-035-SID2-SAI.dgn

STRAND ASSOCIATES®
1170 SOUTH HOUBOLT ROAD
JOLIET, ILLINOIS 60431
(815) 744-4200
IDFPR NO. 184-001273

USER NAME = CodyH	DESIGNED - TJE	REVISED - 1 02/18/2025	
	CHECKED - NDR	REVISED -	
PLOT SCALE = 0:2.0000 ':" / in.	DRAWN - CJH	REVISED -	
PLOT DATE = 2/17/2025	CHECKED - TJE	REVISED -	

STATE OF ILLINOIS
DEPARTMENT OF TRANSPORTATION

SEMI-INTEGRAL DIAPHRAGM
STRUCTURE NO. 016-2133 (SB)

SHEET 35 OF 80 SHEETS

F.A.P. RTE.	SECTION	COUNTY	TOTAL SHEETS	SHEET NO.
342	2018-100-BR	COOK	1351	782
		CONTRACT NO. 62N91		
	ILLINOIS	FED. AID PROJECT		

2/17/2025 5:00:08 PM

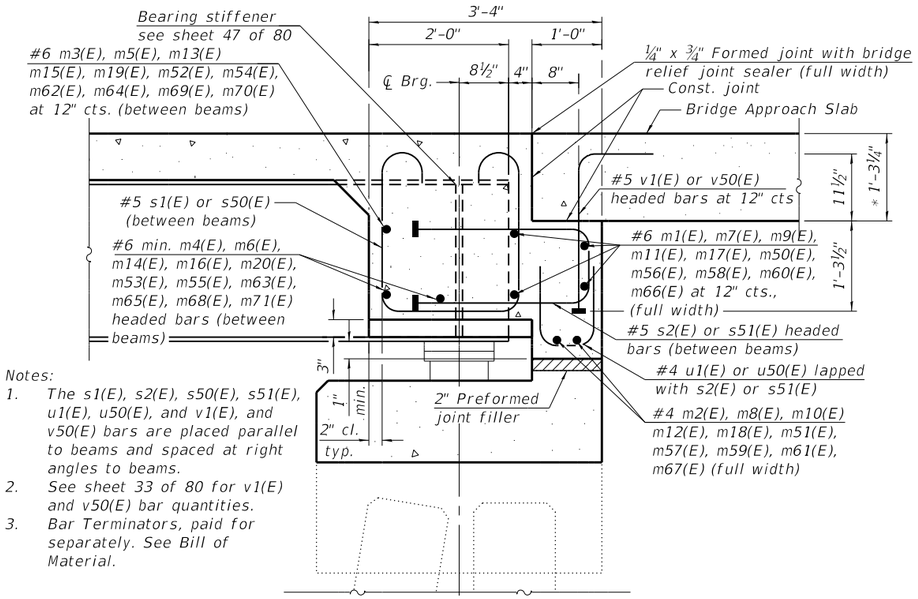

Notes:

1. The s1(E), s2(E), s50(E), s51(E), u1(E), u50(E), and v1(E), and v50(E) bars are placed parallel to beams and spaced at right angles to beams.
2. See sheet 33 of 80 for v1(E) and v50(E) bar quantities.
3. Bar Terminators, paid for separately. See Bill of Material.

* Prior to Grinding

SECTION A-A

(Horiz. dim at Rt. <'s Bk. of Abut.)

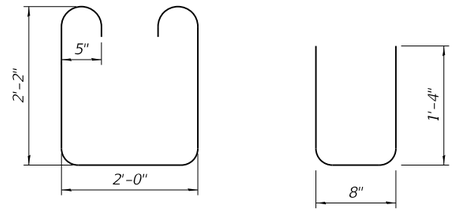

BAR s1(E), s50(E) BAR u1(E), u50(E)

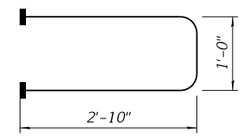

BAR s2(E), s51(E)

(Headed s2(E) 500-#5 Bar Terminators)
(Headed s51(E) 516-#5 Bar Terminators)

*APPROACH SLAB EDGE ELEVATIONS

Elev.	S.N. 016-2133		S.N. 016-0378	
	S. Abut	N. Abut	S. Abut	N. Abut
A	744.13	743.49	744.09	743.30
B	744.71	744.00	744.67	743.95
C	744.81	744.09	744.76	744.05
D	745.25	744.50	745.21	744.55
E	745.25	744.49	743.96	744.55
F	745.24	744.48	743.95	744.54
G	744.64	743.82	743.41	744.07
H	743.87	742.97	742.60	743.38

1

SEMI-INTERGRAL DIAPHARM BILL OF MATERIALS

Structure No. 016-0378 (NB)

Bar	No.	Size	Length	Shape
m1(E)	8	#6	23'-1"	
m2(E)	4	#4	22'-1"	
m3(E)	38	#6	6'-1"	
m4(E)	76	#6	6'-1"	
m5(E)	2	#6	1'-6"	
m6(E)	4	#6	1'-6"	
m7(E)	8	#6	26'-8"	
m8(E)	4	#4	26'-8"	
m9(E)	8	#6	31'-2"	
m10(E)	4	#4	31'-2"	
m11(E)	8	#6	31'-4"	
m12(E)	4	#4	31'-4"	
m13(E)	1	#6	4'-10"	
m14(E)	2	#6	4'-10"	
m15(E)	2	#6	5'-5"	
m16(E)	4	#6	5'-5"	
m17(E)	8	#6	22'-1"	
m18(E)	4	#4	21'-1"	
m19(E)	1	#6	5'-9"	
m20(E)	2	#6	5'-9"	
s1(E)	250	#5	7'-2"	
s2(E)	250	#5	6'-8"	
u1(E)	294	#5	3'-4"	

Structure Excavation	CU YD	656
Concrete Superstructure	CU YD	59.6
Reinforcement Bars, Epoxy Coated	POUND	7,750
Bar Terminators	EACH	676
Granular Backfill for Structures	CY YD	451
Geocomposite Wall Drain	SQ YD	208
Pipe Underdrains for Structures 4"	FOOT	298

Structure No. 016-2133 (SB)

Bar	No.	Size	Length	Shape
m50(E)	8	#6	22'-1"	
m51(E)	4	#4	20'-11"	
m52(E)	39	#6	5'-10"	
m53(E)	78	#6	5'-10"	
m54(E)	2	#6	0'-10"	
m55(E)	4	#6	0'-10"	
m56(E)	8	#6	30'-6"	
m57(E)	4	#4	30'-6"	
m58(E)	8	#6	31'-6"	
m59(E)	4	#4	31'-6"	
m60(E)	8	#6	30'-5"	
m61(E)	8	#4	30'-5"	
m62(E)	1	#6	4'-8"	
m63(E)	2	#6	4'-8"	
m64(E)	1	#6	4'-10"	
m65(E)	2	#6	4'-10"	
m68(E)	1	#6	5'-5"	
m69(E)	2	#6	5'-5"	
m70(E)	1	#6	5'-10"	
m71(E)	2	#6	5'-10"	
s50(E)	258	#5	7'-2"	
s51(E)	258	#5	6'-8"	
u50(E)	306	#5	3'-4"	

Structure Excavation	CU YD	815
Concrete Superstructure	CU YD	58.4
Reinforcement Bars, Epoxy Coated	POUND	7,680
Bar Terminators	EACH	694
Granular Backfill for Structures	CY YD	600
Geocomposite Wall Drain	SQ YD	241
Pipe Underdrains for Structures 4"	FOOT	311

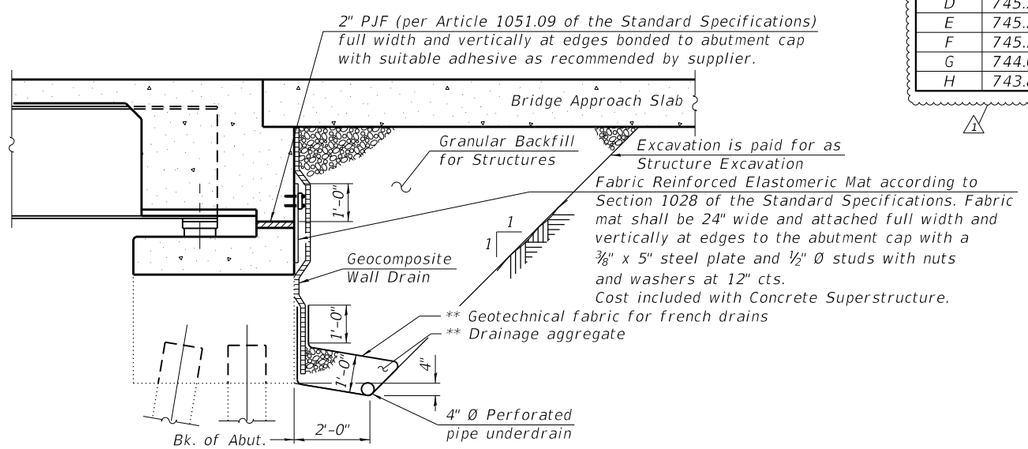

SECTION THRU SEMI-INTEGRAL ABUTMENT

(Horiz. dim. at Rt. ∠'s to Bk. of Abut.)

** Included in the cost of Pipe Underdrains for Structures

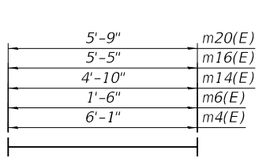

BAR m4(E), m6(E), m14(E), m16(E), m20(E)

(Headed m4(E) 152-#6 Bar Terminators)
(Headed m6(E) 8-#6 Bar Terminators)
(Headed m14(E) 4-#6 Bar Terminators)
(Headed m16(E) 8-#6 Bar Terminators)
(Headed m20(E) 4-#6 Bar Terminators)

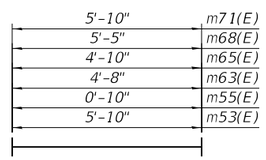

BAR m53(E), m55(E), m63(E), m65(E), m68(E), m71(E)

(Headed m53(E) 156-#6 Bar Terminators)
(Headed m55(E) 8-#6 Bar Terminators)
(Headed m63(E) 4-#6 Bar Terminators)
(Headed m65(E) 4-#6 Bar Terminators)
(Headed m68(E) 2-#6 Bar Terminators)
(Headed m71(E) 4-#6 Bar Terminators)

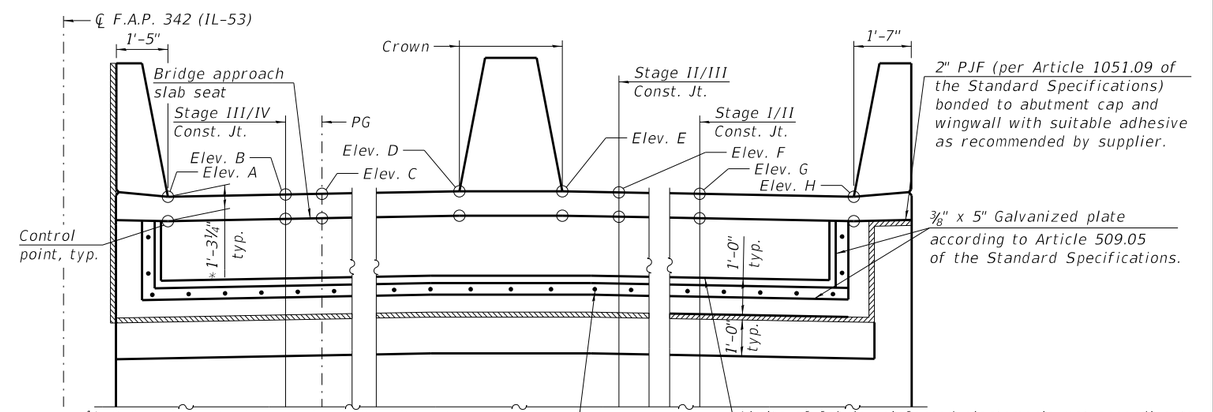

* Prior to Grinding

ELEVATION

1 (Looking North of NB South Abut., other Abut. similar)

Notes:

1. All drainage system components shall extend to 2'-0" from the end of each wingwall except an outlet pipe shall extend until intersecting with the side slopes. The pipes shall drain into concrete headwalls. (See Article 601.05 of the Standard Specifications and Highway Standard 601101).
2. Cost of fabric reinforced elastomeric mat, galvanized plate, stainless steel expansion bolts with nuts and washers and installation are included in the cost of Concrete Superstructure.
3. All approach slab edge elevations maintain same orientation with Elev. A starting at interior parapets.
4. The approach slab ledge shall have a constant slope determined from the control points show.
5. Bar Terminators, paid for separately. See Bill of Material.
6. 1 The Approach Slab Edge Elevations are the same orientation mirrored about the centerline of IL-53 for the SB structure.

STRAND ASSOCIATES®
1170 SOUTH HOUBOLT ROAD
JOLIET, ILLINOIS 60431
(815) 744-4200
IDFPR NO. 184-001273

USER NAME = emilyre	DESIGNED - TJE	REVISED - 1 02/18/2025	STATE OF ILLINOIS DEPARTMENT OF TRANSPORTATION	SEMI-INTEGRAL DIAPHRAGM DETAILS STRUCTURE NO. 016-0378 (NB) AND 016-2133 (SB)	
	CHECKED - NDR	REVISED -			
PLOT SCALE = 0:2.0000 ':" / in.	DRAWN - CJH	REVISED -			
PLOT DATE = 2/18/2025	CHECKED - TJE	REVISED -		SHEET 36 OF 80 SHEETS	

F.A.P. RTE.	SECTION	COUNTY	TOTAL SHEETS	SHEET NO.
342	2018-100-BR	COOK	1351	783
		CONTRACT NO. 62N91		
	ILLINOIS	FED. AID PROJECT		

MODEL: Default
FILE NAME: S:\IOL\6300-6399\6246\113\Drawings\CAD\Micros-SS4\CAD_Sheets\0160378213 3-C2-036-SID3-SAI.dgn
2/18/2025 11:20:41 AM

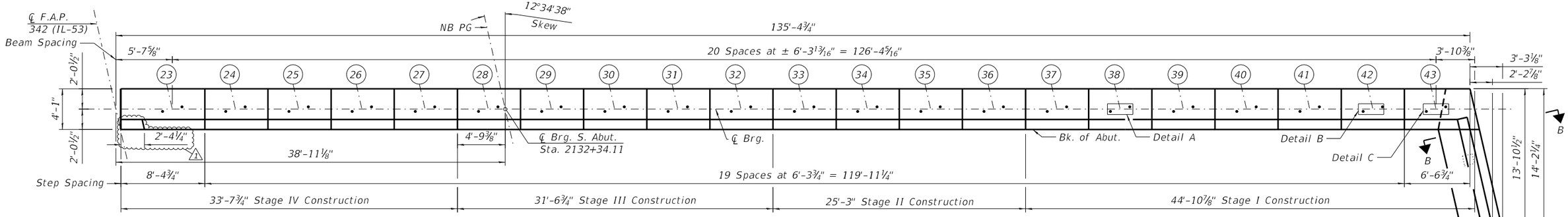

SOUTH ABUTMENT PLAN

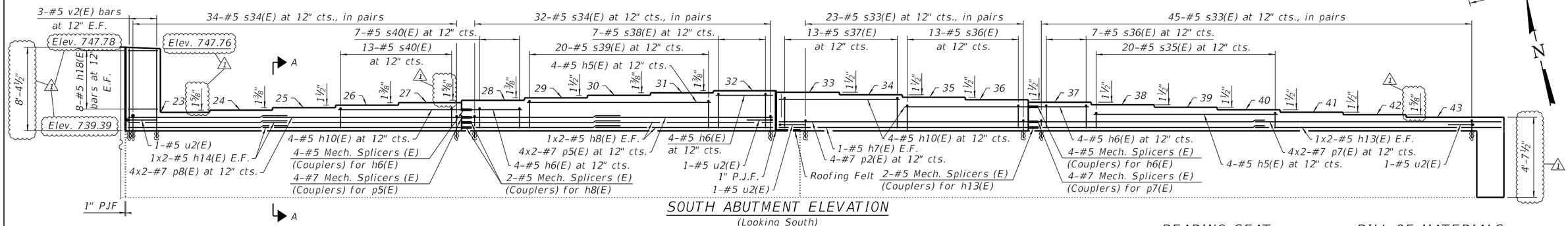

SOUTH ABUTMENT ELEVATION

(Looking South)

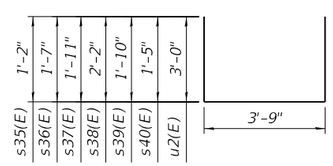

BARS s35(E)-s40(E), u2(E)

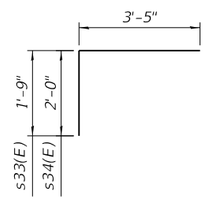

BARS s33(E), s34(E)

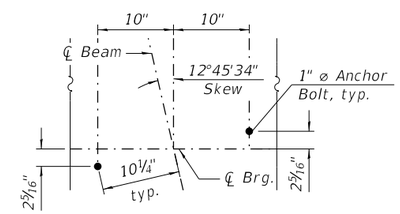

ANCHOR BOLT LOCATION PLAN DETAIL B, BEAM 42

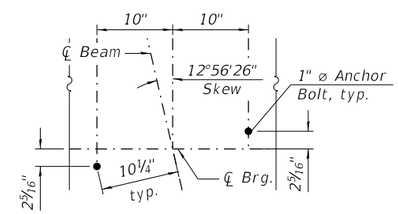

ANCHOR BOLT LOCATION PLAN DETAIL C, BEAM 43

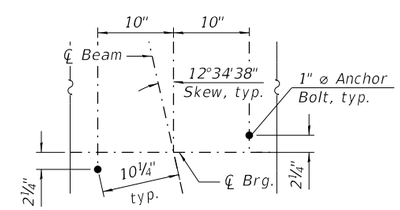

ANCHOR BOLT LOCATION PLAN DETAIL A, BEAMS 23-41

BEARING SEAT ELEVATIONS

S. Abut.	Elevation
23	740.75
24	740.89
25	741.00
26	741.13
27	741.24
28	741.38
29	741.49
30	741.61
31	741.73
32	741.84
33	741.77
34	741.65
35	741.52
36	741.40
37	741.27
38	741.15
39	741.02
40	740.90
41	740.77
42	740.65
43	740.51

BILL OF MATERIALS

Bar	No.	Size	Length	Shape
h5(E)	8	#5	18'-11"	
h6(E)	12	#5	6'-2"	
h7(E)	2	#5	24'-11"	
h8(E)	8	#5	17'-1"	
h10(E)	12	#5	12'-8"	
h11(E)	10	#5	10'-10"	
h13(E)	4	#5	23'-9"	
h14(E)	8	#5	18'-2"	
h18(E)	16	#5	2'-3"	
n1(E)	32	#5	5'-8"	
p2(E)	4	#7	25'-0"	
p5(E)	8	#7	17'-8"	
p7(E)	8	#7	24'-4"	
p8(E)	8	#7	18'-9"	
s32(E)	16	#5	12'-5"	
s33(E)	136	#5	4'-9"	
s34(E)	132	#5	5'-0"	
s35(E)	20	#5	6'-1"	
s36(E)	20	#5	6'-11"	
s37(E)	13	#5	7'-7"	
s38(E)	7	#5	8'-1"	
s39(E)	20	#5	7'-5"	
s40(E)	20	#5	6'-7"	
u2(E)	4	#5	9'-9"	
v2(E)	38	#5	3'-8"	
w6(E)	10	#5	6'-4"	
w7(E)	10	#5	14'-2"	
Concrete Structures			CU YD	47.5
Reinforcement Bars, Epoxy Coated			POUND	5,060

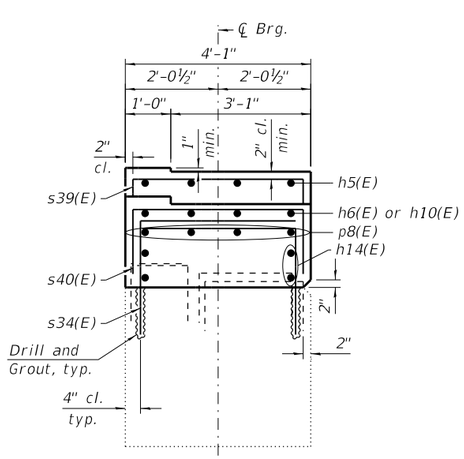

SECTION A-A

(Similar bars not shown for clarity)

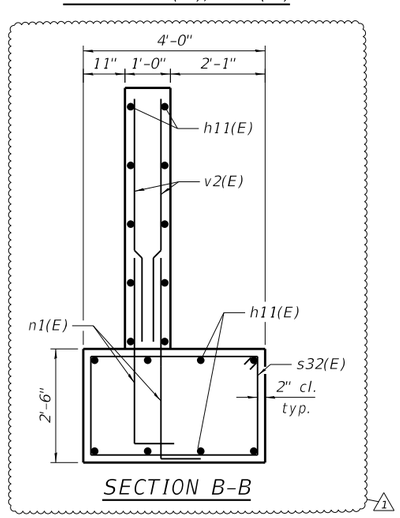

SECTION B-B

MINIMUM BAR LAP

#5 Bar = 3'-0"

Notes:

1. Cost of drilling and grouting reinforcing bars and roofing felt included in cost of Concrete Structures.
2. Bars shall be drilled and set according to Article 584 of the Standard Specifications. Bars shall have a 9" minimum embedment depth.
3. Bars indicated thus 2x3-#5 etc. indicates 2 lines of bars with 3 lengths per line.

STRAND ASSOCIATES®
1170 SOUTH HOUBOLT ROAD
JOLIET, ILLINOIS 60431
(815) 744-4200
IDFPR NO. 184-001273

USER NAME = CodyH	DESIGNED - ELR	REVISED - 1 02/18/2025	
	CHECKED - NDR	REVISED -	
PLOT SCALE = 0:2.0000 ':" / in.	DRAWN - CJH	REVISED -	
PLOT DATE = 2/21/2025	CHECKED - TJE	REVISED -	

STATE OF ILLINOIS
DEPARTMENT OF TRANSPORTATION

ABUTMENT PLAN AND ELEVATIONS (1 OF 2)
STRUCTURE NO. 016-0378 (NB)

SHEET 61 OF 80 SHEETS

F.A.P. RTE.	SECTION	COUNTY	TOTAL SHEETS	SHEET NO.
342	2018-100-BR	COOK	1351	808

CONTRACT NO. 62N91

ILLINOIS | FED. AID PROJECT

MODEL: Default
FILE NAME: S:\IDL16300-6399\6346\113\Drawings\CAD\Micros-SS#\CAD_Sheets\0160378213 3-C2-061-APE1-SAt.dgn
2/21/2025 5:09:13 PM

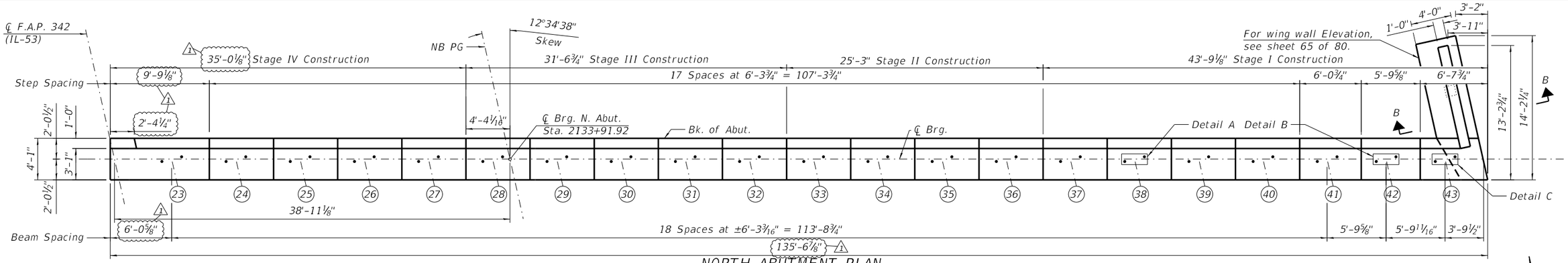

NORTH ABUTMENT PLAN

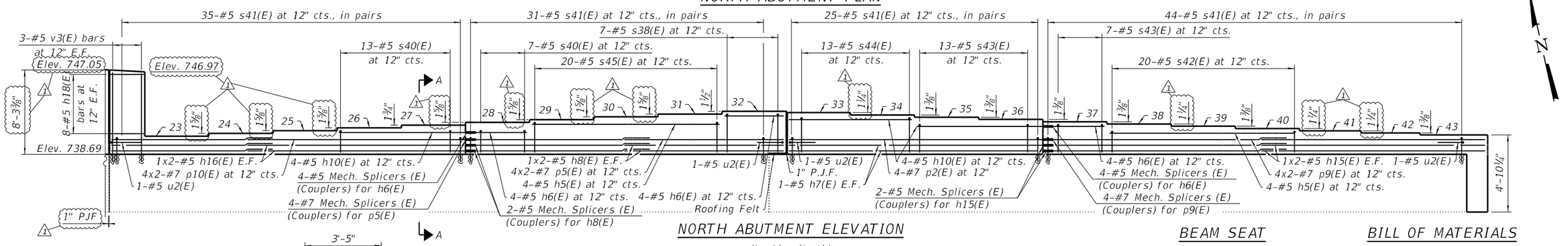

NORTH ABUTMENT ELEVATION

(Looking North)

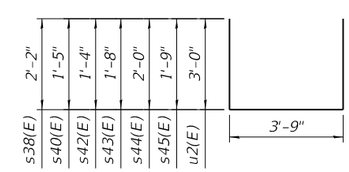

BARS s38(E), s40(E), s42(E)-s45(E), u2(E)

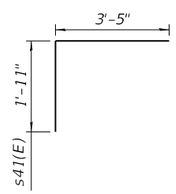

BARS s41(E)

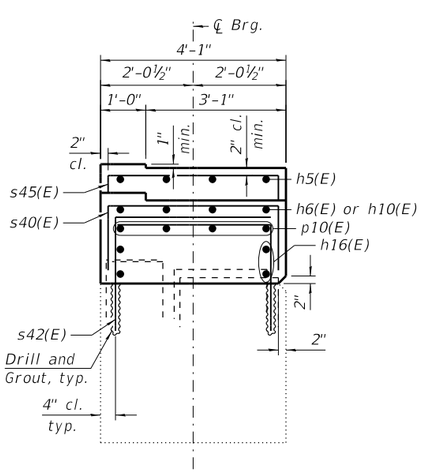

SECTION A-A

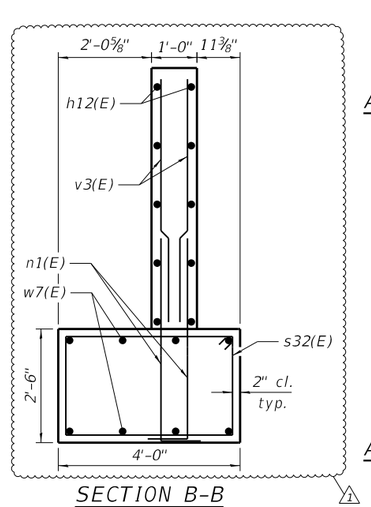

SECTION B-B

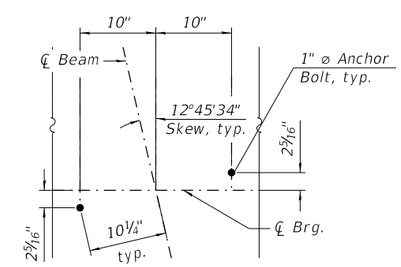

ANCHOR BOLT LOCATION PLAN DETAIL B, BEAMS 42

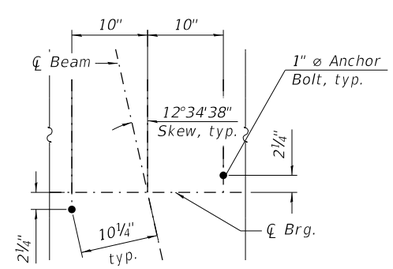

ANCHOR BOLT LOCATION PLAN DETAIL A, BEAMS 23-41

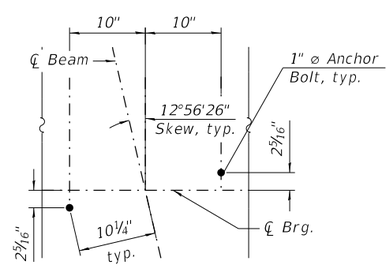

ANCHOR BOLT LOCATION PLAN DETAIL C, BEAMS 43

BEAM SEAT ELEVATIONS

N. Abut.	Elevation
23	739.98
24	740.12
25	740.25
26	740.39
27	740.53
28	740.67
29	740.80
30	740.94
31	741.07
32	741.20
33	741.14
34	741.04
35	740.92
36	740.81
37	740.69
38	740.58
39	740.47
40	740.36
41	740.25
42	740.15
43	740.04

MINIMUM BAR LAP

#5 Bar = 3'-0"

Notes:

1. Cost of drilling and grouting reinforcing bars and roofing felt included in cost of Concrete Structures.
2. Bars shall be drilled and set according to Article 584 of the Standard Specifications. Bars shall have a 9" minumum embedment depth.
3. Bars indicated thus 2x3-#5 etc. indicates 2 lines of bars with 3 lengths per line.

BILL OF MATERIALS

Bar	No.	Size	Length	Shape
h5(E)	8	#5	18'-11"	
h6(E)	12	#5	6'-2"	
h7(E)	4	#5	24'-11"	
h8(E)	8	#5	17'-1"	
h10(E)	12	#5	12'-8"	
h12(E)	10	#5	9'-8"	
h15(E)	8	#5	23'-3"	
h16(E)	8	#5	18'-7"	
h18(E)	16	#5	2'-3"	
n1(E)	30	#5	5'-8"	
p2(E)	4	#7	25'-0"	
p5(E)	8	#7	17'-8"	
p9(E)	8	#7	23'-10"	
p10(E)	8	#7	19'-2"	
s32(E)	14	#5	12'-5"	
s38(E)	7	#5	8'-1"	
s40(E)	20	#5	6'-7"	
s41(E)	270	#5	4'-11"	
s42(E)	20	#5	6'-5"	
s43(E)	20	#5	7'-1"	
s44(E)	13	#5	7'-9"	
s45(E)	20	#5	7'-3"	
u2(E)	4	#5	9'-9"	
v3(E)	36	#5	3'-7"	
w7(E)	10	#5	14'-2"	
w8(E)	10	#5	6'-7"	
Concrete Structures			CU YD	48.3
Reinforcement Bars, Epoxy Coated			POUND	5,190

MODEL: Default
FILE NAME: S:\IOL\6300--6399\6346\113\Drawings\CAD\Micros-Soft\CAD_Sheets\0160378213-C2-062-APE2-SAI.dgn

2/21/2025 5:09:19 PM

STRAND ASSOCIATES®
1170 SOUTH HOUBOLT ROAD
JOLIET, ILLINOIS 60431
(815) 744-4200
IDFPR NO. 184-001273

USER NAME = CodyH	DESIGNED - ELR	REVISED - 1 02/18/2025	
	CHECKED - NDR	REVISED -	
PLOT SCALE = 0:2.0000 ':" / in.	DRAWN - CJH	REVISED -	
PLOT DATE = 2/21/2025	CHECKED - TJE	REVISED -	

STATE OF ILLINOIS
DEPARTMENT OF TRANSPORTATION

ABUTMENT PLAN AND ELEVATIONS (2 OF 2)
STRUCTURE NO. 016-0378 (NB)

SHEET 62 OF 80 SHEETS

F.A.P. RTE.	SECTION	COUNTY	TOTAL SHEETS	SHEET NO.
342	2018-100-BR	COOK	1351	809
		CONTRACT NO. 62N91		
	ILLINOIS	FED. AID PROJECT		

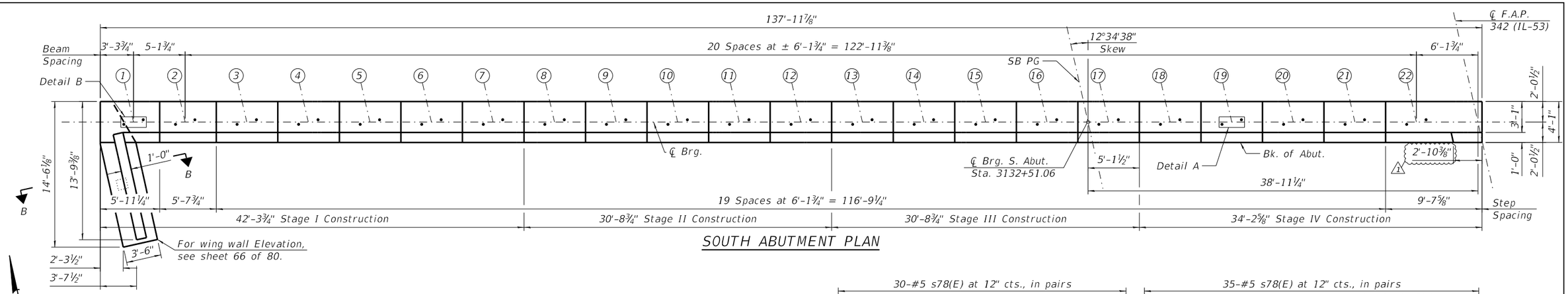

SOUTH ABUTMENT PLAN

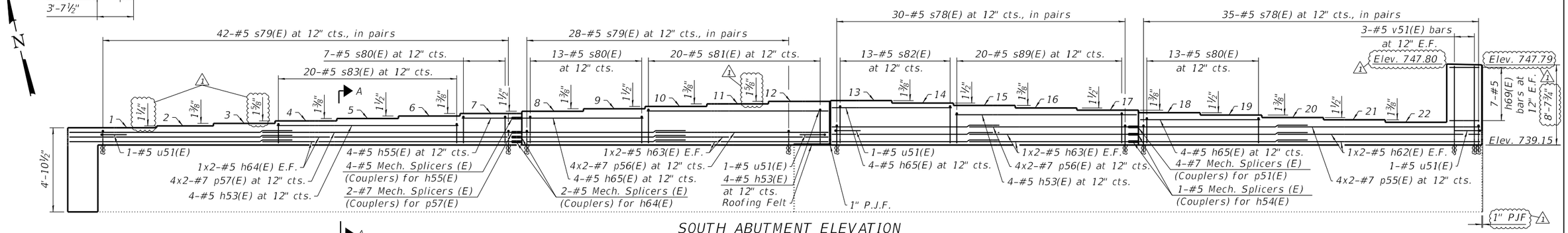

SOUTH ABUTMENT ELEVATION

(Looking South)

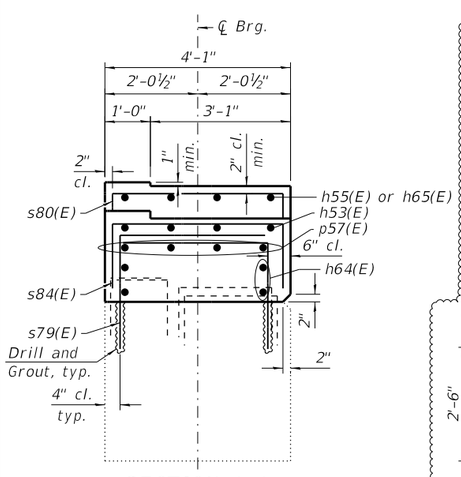

SECTION A-A

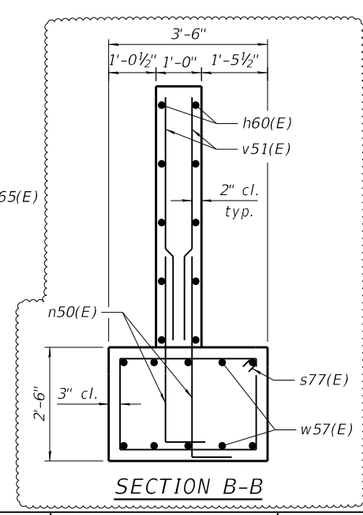

SECTION B-B

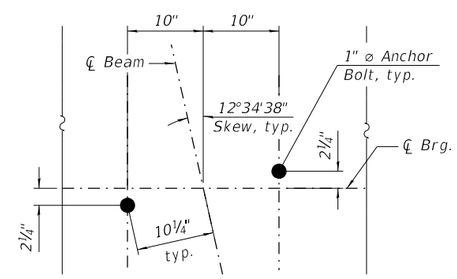

ANCHOR BOLT LOCATION PLAN DETAIL A, BEAMS 2-22

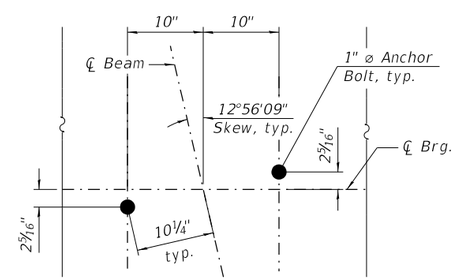

ANCHOR BOLT LOCATION PLAN DETAIL B, BEAM 1

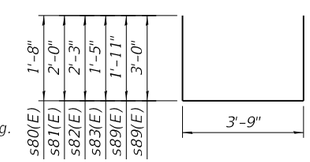

BARS s80(E)-s83(E), s89(E), u51(E)

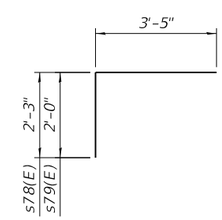

BARS s78(E), s79(E)

BEAM SEAT ELEVATIONS

S. Abut.	Elevation
1	740.52
2	740.62
3	740.74
4	740.87
5	740.99
6	741.11
7	741.23
8	741.35
9	741.47
10	741.59
11	741.71
12	741.84
13	741.88
14	741.77
15	741.64
16	741.53
17	741.40
18	741.29
19	741.16
20	741.05
21	740.92
22	740.81

MINIMUM BAR LAP

#5 Bar = 3'-0"

Notes:
1. Cost of drilling and grouting reinforcing bars and roofing felt included in cost of Concrete Structures.
2. Bars shall be drilled and set according to Article 584 of the Standard Specifications. Bars shall have a 9" minimum embedment depth.
3. Bars indicated thus 2x3-#5 etc. indicates 2 lines of bars with 3 lengths per line.

BILL OF MATERIALS

Bar	No.	Size	Length	Shape
h53(E)	12	#5	18'-1"	
h55(E)	4	#5	5'-10"	
h60(E)	10	#5	10'-4"	
h62(E)	8	#5	18'-5"	
h63(E)	16	#5	16'-9"	
h64(E)	8	#5	22'-7"	
h65(E)	12	#5	12'-0"	
h69(E)	14	#5	2'-9"	
n50(E)	30	#5	5'-8"	
p55(E)	8	#7	22'-2"	
p56(E)	8	#7	17'-4"	
p57(E)	8	#7	23'-2"	
s77(E)	14	#5	11'-1"	
s78(E)	130	#5	5'-8"	
s79(E)	140	#5	5'-4"	
s80(E)	40	#5	7'-1"	
s81(E)	20	#5	7'-9"	
s82(E)	7	#5	8'-3"	
s83(E)	20	#5	6'-7"	
s89(E)	20	#5	7'-7"	
u51(E)	4	#5	9'-9"	
v51(E)	36	#5	3'-11"	
w55(E)	2	#5	4'-9"	
w56(E)	8	#5	5'-10"	
w57(E)	10	#5	13'-11"	
Concrete Structures				CU YD 52.4
Reinforcement Bars, Epoxy Coated				POUND 5,300

STRAND ASSOCIATES®
1170 SOUTH HOUBOLT ROAD
JOLIET, ILLINOIS 60431
(815) 744-4200
IDFPR NO. 184-001273

USER NAME = CodyH	DESIGNED - ELR	REVISED - 1 02/18/2025	
	CHECKED - NDR	REVISED -	
PLOT SCALE = 0:2.0000 ':" / in.	DRAWN - CJH	REVISED -	
PLOT DATE = 2/21/2025	CHECKED - TJE	REVISED -	

STATE OF ILLINOIS
DEPARTMENT OF TRANSPORTATION

ABUTMENT PLAN AND ELEVATIONS (1 OF 2)
STRUCTURE NO. 016-2133 (SB)

SHEET 63 OF 80 SHEETS

F.A.P. RTE.	SECTION	COUNTY	TOTAL SHEETS	SHEET NO.
342	2018-100-BR	COOK	1351	810
		CONTRACT NO. 62N91		
		ILLINOIS	FED. AID PROJECT	

MODEL: Default
FILE NAME: S:\IDL\6300-6399\6346\113\Drawings\CAD\Micros-SS4\CAD_Sheets\016037821 33-C2-063-APE1-SA1.dgn
2/21/2025 5:09:21 PM

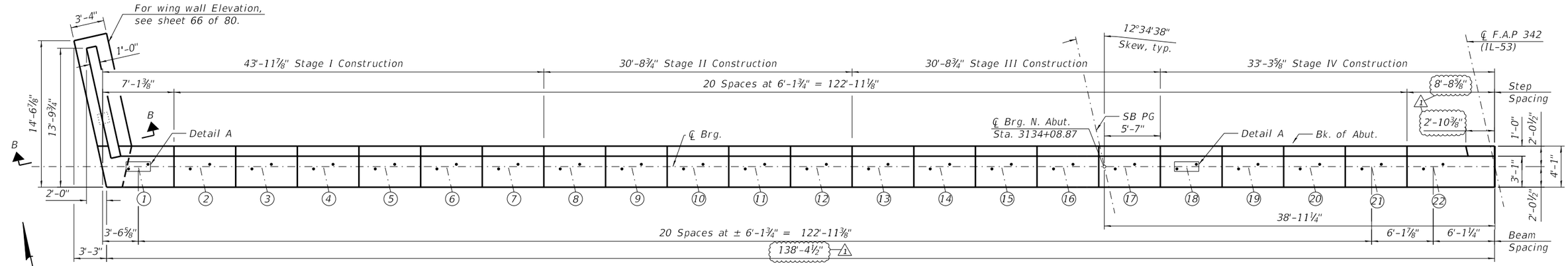

NORTH ABUTMENT PLAN

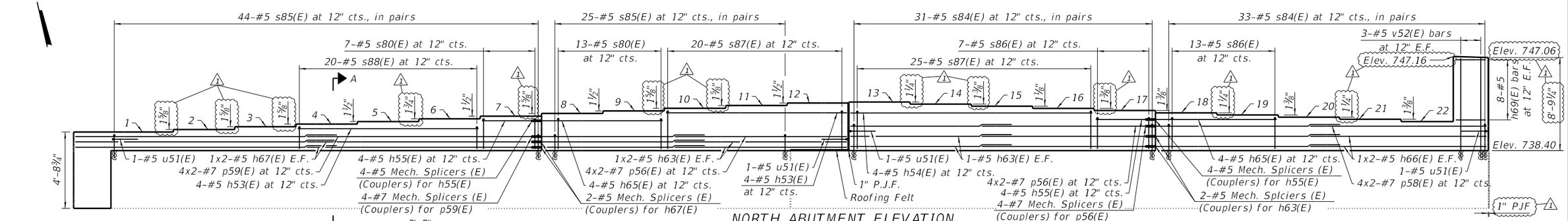

NORTH ABUTMENT ELEVATION

(Looking North)

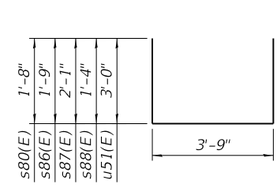

BARS s80(E), s86(E)-s88(E), u51(E)

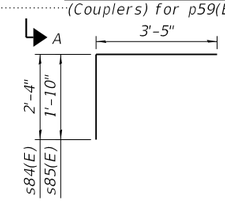

BARS s84(E), s85(E)

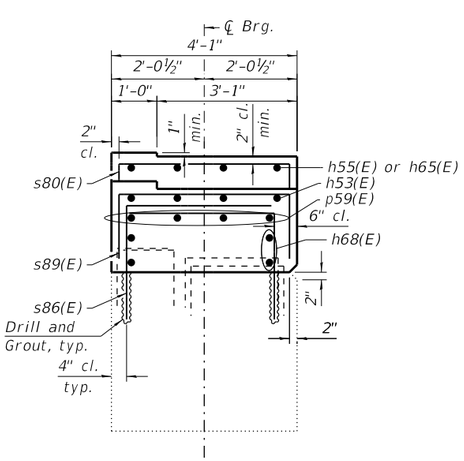

SECTION A-A

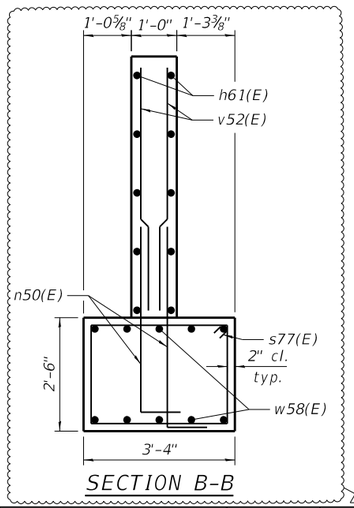

SECTION B-B

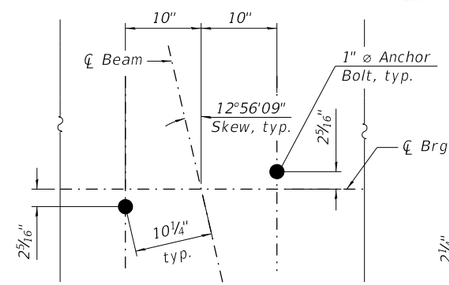

ANCHOR BOLT LOCATION PLAN DETAIL B, BEAM 1

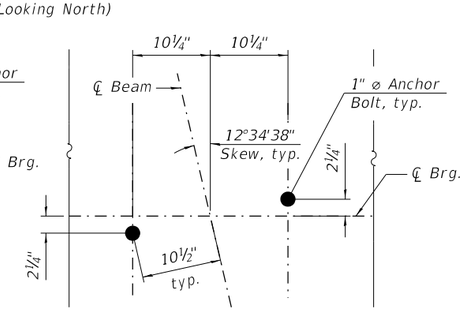

ANCHOR BOLT LOCATION PLAN DETAIL A, BEAMS 2-22

BEAM SEAT ELEVATIONS

N. Abut.	Elevation
1	739.63
2	739.77
3	739.90
4	740.04
5	740.16
6	740.31
7	740.43
8	740.57
9	740.69
10	740.83
11	740.96
12	741.09
13	741.14
14	741.04
15	740.92
16	740.83
17	740.71
18	740.60
19	740.49
20	740.38
21	740.28
22	740.16

MINIMUM BAR LAP

#5 Bar = 3'-0"

Notes:

1. Cost of drilling and grouting reinforcing bars and roofing felt included in cost of Concrete Structures.
2. Bars shall be drilled and set according to Article 584 of the Standard Specifications. Bars shall have a 9" minimum embedment depth.
3. Bars indicated thus 2x3-#5 etc. indicates 2 lines of bars with 3 lengths per line.

BILL OF MATERIALS

Bar	No.	Size	Length	Shape
h53(E)	8	#5	18'-1"	
h54(E)	4	#5	24'-3"	
h55(E)	8	#5	5'-10"	
h61(E)	10	#5	10'-11"	
h63(E)	16	#5	16'-9"	
h65(E)	8	#5	11'-12"	
h66(E)	8	#5	18'-1"	
h67(E)	8	#5	23'-5"	
h69(E)	16	#5	2'-9"	
n50(E)	32	#5	5'-8"	
p56(E)	16	#7	17'-4"	
p58(E)	8	#7	18'-8"	
p59(E)	8	#7	24'-0"	
s77(E)	14	#5	11'-1"	
s80(E)	20	#5	7'-1"	
s84(E)	128	#5	5'-4"	
s85(E)	138	#5	4'-10"	
s86(E)	20	#5	7'-3"	
s87(E)	45	#5	7'-11"	
s88(E)	20	#5	6'-5"	
u51(E)	4	#5	9'-9"	
v52(E)	38	#5	3'-8"	
w58(E)	10	#5	14'-5"	
w59(E)	10	#5	5'-10"	
Concrete Structures				CU YD 51.5
Reinforcement Bars, Epoxy Coated				POUND 5,320

STRAND ASSOCIATES®
1170 SOUTH HOUBOLT ROAD
JOLIET, ILLINOIS 60431
(815) 744-4200
IDFPR NO. 184-001273

USER NAME = CodyH	DESIGNED - ELR	REVISED - 02/18/2025	
	CHECKED - NDR	REVISED -	
PLOT SCALE = 0:2.0000 ':" / in.	DRAWN - CJH	REVISED -	
PLOT DATE = 2/21/2025	CHECKED - TJE	REVISED -	

STATE OF ILLINOIS
DEPARTMENT OF TRANSPORTATION

ABUTMENT PLAN AND ELEVATIONS (2 OF 2)
STRUCTURE NO. 016-2133 (SB)

SHEET 64 OF 80 SHEETS

F.A.P. RTE.	SECTION	COUNTY	TOTAL SHEETS	SHEET NO.
342	2018-100-BR	COOK	1351	811

CONTRACT NO. 62N91

ILLINOIS FED. AID PROJECT

MODEL: Default
FILE NAME: S:\IOL\16300-63996346\113\Drawings\CAD\Micros-SS4\CAD_Sheets\01603782133-C2-064-APE2-SA1.dgn
2/21/2025 5:09:23 PM

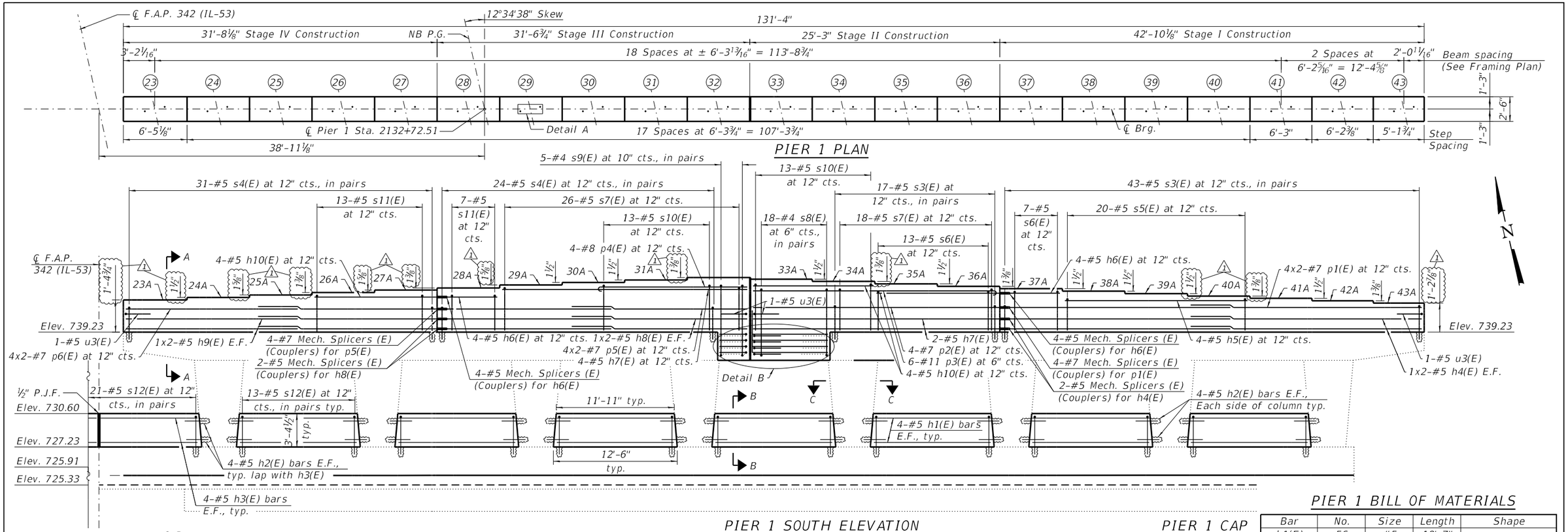

PIER 1 PLAN

PIER 1 SOUTH ELEVATION

(Looking North)

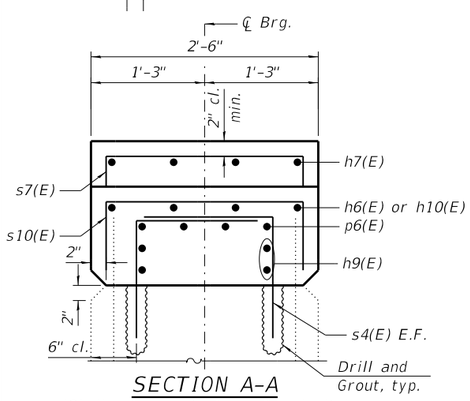

SECTION A-A

(Similar bars not shown for clarity)

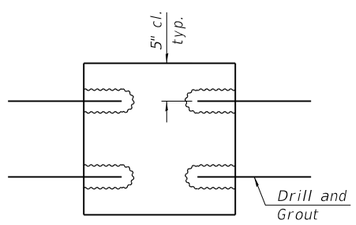

SECTION C-C

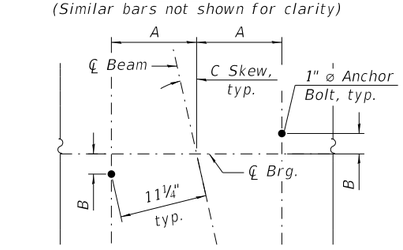

ANCHOR BOLT LOCATION PLAN

DETAIL A

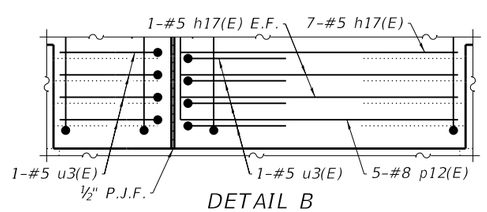

DETAIL B

ANCHOR BOLT LAYOUT

Beamline	A	B	C
23-41	11"	2 7/16"	12°34'38"
42	10 15/16"	2 1/2"	12°45'34"
43	10 15/16"	2 1/2"	12°56'26"

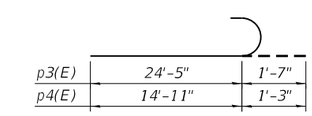

BARS p3(E), p4(E)

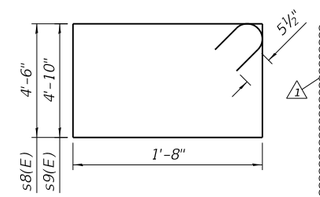

BARS s8(E), s9(E)

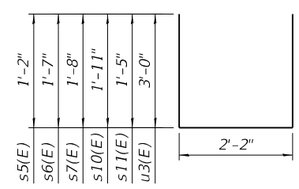

BARS s5(E)-s7(E), s10(E), s11(E), AND u3(E)

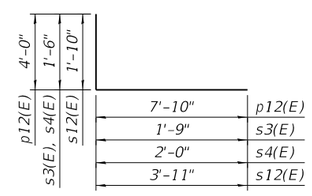

BARS p12(E), s3(E), s4(E), s12(E)

PIER 1 CAP ELEVATIONS

Pier 1	Elev.
23A	740.63
24A	740.76
25A	740.89
26A	741.01
27A	741.14
28A	741.26
29A	741.39
30A	741.52
31A	741.64
32A	741.76
33A	741.68
34A	741.56
35A	741.44
36A	741.32
37A	741.20
38A	741.08
39A	740.95
40A	740.83
41A	740.71
42A	740.59
43A	740.47

Notes:

1. See sheet 69 of 80 for Section B-B.
2. Cost of drilling and grouting reinforcing bars included in cost of Concrete Structures.
3. Bars shall be drilled and set according to Article 584 of the Standard Specifications. Bars shall have a 9" minimum embedment depth.
4. Bars indicated thus 2x3-#5 etc. indicates 2 lines of bars with 3 lengths per line.

PIER 1 BILL OF MATERIALS

Bar	No.	Size	Length	Shape
h1(E)	56	#5	10'-7"	
h2(E)	128	#5	3'-2"	
h3(E)	16	#5	9'-10"	
h4(E)	8	#5	22'-9"	
h5(E)	4	#5	18'-7"	
h6(E)	8	#5	6'-0"	
h7(E)	8	#5	24'-11"	
h8(E)	8	#5	17'-1"	
h9(E)	8	#5	17'-2"	
h10(E)	12	#5	12'-4"	
h17(E)	11	#5	8'-6"	
p1(E)	8	#7	23'-4"	
p2(E)	4	#7	24'-11"	
p3(E)	6	#11	26'-0"	
p4(E)	4	#8	16'-2"	
p5(E)	8	#7	17'-8"	
p6(E)	8	#7	17'-9"	
p12(E)	5	#8	11'-10"	
s3(E)	120	#5	3'-3"	
s4(E)	110	#5	3'-6"	
s5(E)	20	#5	4'-8"	
s6(E)	20	#5	5'-4"	
s7(E)	44	#5	5'-7"	
s8(E)	36	#4	13'-4"	
s9(E)	10	#4	13'-10"	
s10(E)	26	#5	6'-0"	
s11(E)	20	#5	5'-0"	
s12(E)	224	#5	5'-9"	
u3(E)	12	#5	8'-2"	

Concrete Structures	CU YD	55.0
Reinforcement Bars, Epoxy Coated	POUND	8,000
Concrete Sealer	SQ FT	1,502

STRAND ASSOCIATES®
1170 SOUTH HOUBOLT ROAD
JOLIET, ILLINOIS 60431
(815) 744-4200
IDFPR NO. 184-001273

USER NAME = CodyH	DESIGNED - ELR	REVISED - 1 02/18/2025	
	CHECKED - NDR	REVISED -	
PLOT SCALE = 0:2.0000 ':" / in.	DRAWN - CJH	REVISED -	
PLOT DATE = 2/21/2025	CHECKED - TJE	REVISED -	

STATE OF ILLINOIS
DEPARTMENT OF TRANSPORTATION

PIER MODIFICATION DETAILS (1 OF 3)
STRUCTURE NO. 016-0378 (NB)

SHEET 67 OF 80 SHEETS

F.A.P. RTE.	SECTION	COUNTY	TOTAL SHEETS	SHEET NO.
342	2018-100-BR	COOK	1351	814

CONTRACT NO. 62N91

ILLINOIS FED. AID PROJECT

MODEL: Default
FILE NAME: S:\IOL\6300-6399\6346\113\Drawings\CAD\Micros-SS4\CAD_Sheets\016037821 33-C2-067-PMD1-S4t.dgn
2/21/2025 5:09:25 PM

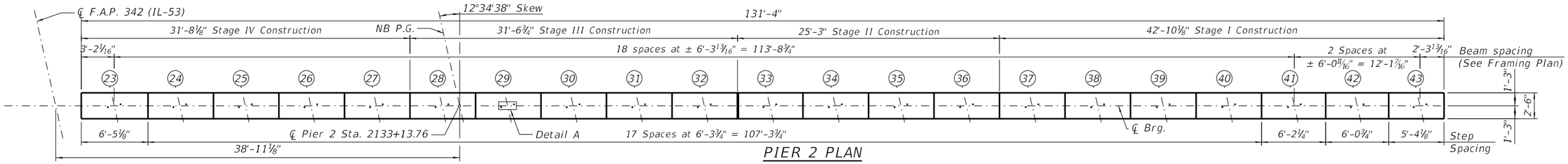

PIER 2 PLAN

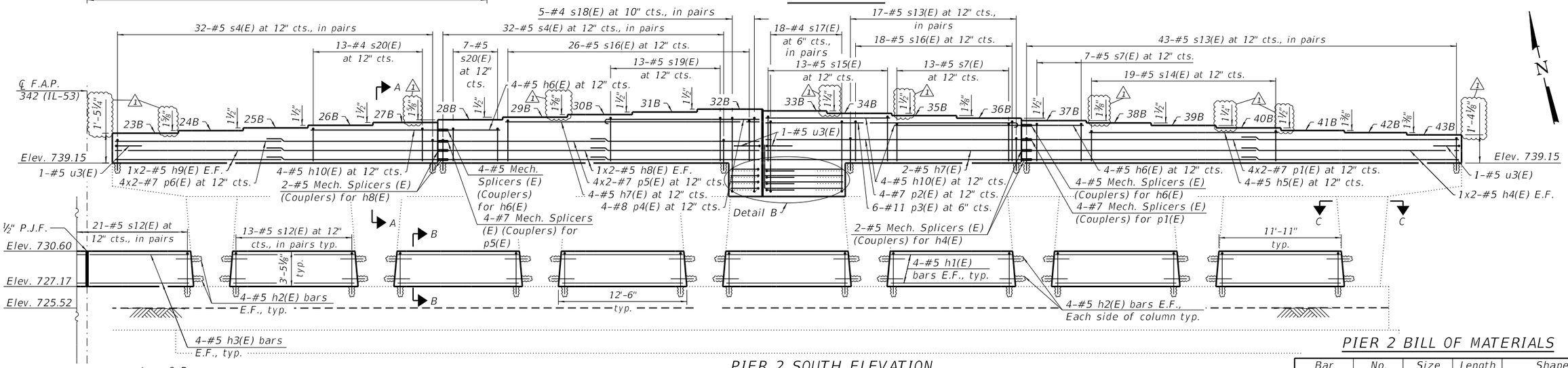

PIER 2 SOUTH ELEVATION

(Looking North)

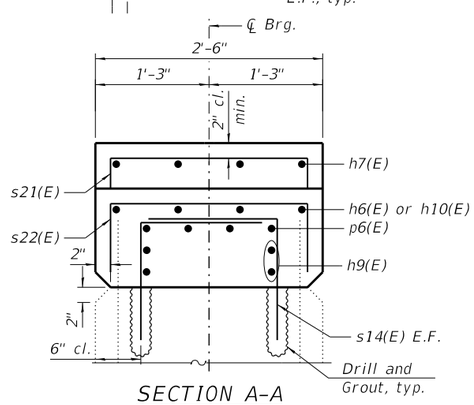

SECTION A-A

(Similar bars not shown for clarity)

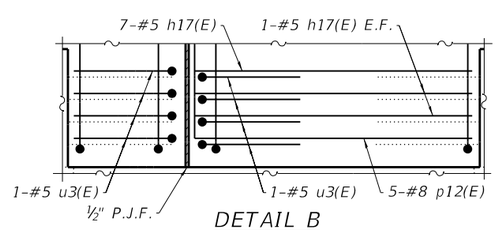

DETAIL B

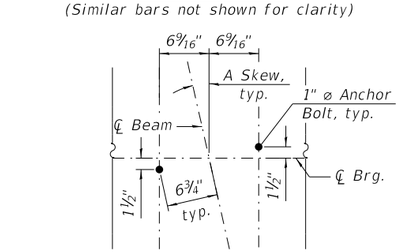

ANCHOR BOLT LOCATION PLAN
DETAIL A

ANCHOR BOLT LAYOUT

Beamline	A	B	C
23-41	11"	2 7/16"	12°34'38"
42	10 15/16"	2 1/2"	12°45'34"
43	10 15/16"	2 1/2"	12°56'26"

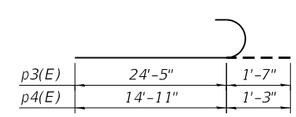

BARS p3(E), p4(E)

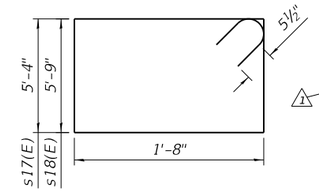

BARS s17(E), s18(E)

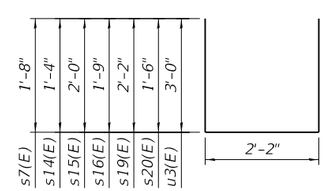

BARS s7(E), s14(E)-s16(E), s19(E), s20(E), AND u3(E)

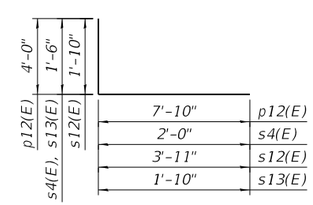

BARS p12(E), s4(E), s12(E), s13(E)

PIER 2 CAP ELEVATIONS

Pier 2	Elev.
23B	740.59
24B	740.73
25B	740.85
26B	740.98
27B	741.10
28B	741.24
29B	741.36
30B	741.50
31B	741.62
32B	741.75
33B	741.67
34B	741.57
35B	741.44
36B	741.33
37B	741.20
38B	741.09
39B	740.96
40B	740.86
41B	740.73
42B	740.62
43B	740.50

Notes:
1. See sheet 69 of 80 for Section B-B.
2. Cost of drilling and grouting reinforcing bars included in cost of Concrete Structures.
3. Bars shall be drilled and set according in Article 584 of the Standard Specifications. Bars shall have a 9" minimum embedment depth.
4. Bars indicated thus 2x3-#5 etc. indicates 2 lines of bars with 3 lengths per line.
5. See sheet 67 of 80 for Section C-C.

PIER 2 BILL OF MATERIALS

Bar	No.	Size	Length	Shape
h1(E)	56	#5	10'-7"	
h2(E)	128	#5	3'-2"	
h3(E)	16	#5	9'-10"	
h4(E)	8	#5	22'-9"	
h5(E)	4	#5	18'-7"	
h6(E)	8	#5	6'-0"	
h7(E)	8	#5	24'-11"	
h8(E)	8	#5	17'-1"	
h9(E)	8	#5	17'-2"	
h10(E)	12	#5	12'-4"	
h17(E)	11	#5	8'-6"	
p1(E)	8	#7	23'-4"	
p2(E)	4	#7	24'-11"	
p3(E)	6	#11	26'-0"	
p4(E)	4	#8	16'-2"	
p5(E)	8	#7	17'-8"	
p6(E)	8	#7	17'-9"	
p12(E)	5	#8	11'-10"	
s4(E)	128	#5	3'-6"	
s7(E)	20	#5	5'-6"	
s12(E)	224	#5	5'-9"	
s13(E)	120	#5	3'-4"	
s14(E)	19	#5	4'-10"	
s15(E)	13	#5	6'-2"	
s16(E)	44	#5	5'-9"	
s17(E)	36	#4	14'-11"	
s18(E)	10	#4	15'-9"	
s19(E)	13	#5	6'-6"	
s20(E)	20	#5	5'-2"	
u3(E)	12	#5	8'-2"	
Concrete Structures			CU YD	57.1
Reinforcement Bars, Epoxy Coated			POUND	8,160
Concrete Sealer			SQ FT	1,502

STRAND ASSOCIATES®
1170 SOUTH HOUBOLT ROAD
JOLIET, ILLINOIS 60431
(815) 744-4200
IDFPR NO. 184-001273

USER NAME = CodyH	DESIGNED - ELR	REVISED - 1 02/18/2025	
	CHECKED - NDR	REVISED -	
PLOT SCALE = 0:2.0000 ':" / in.	DRAWN - CJH	REVISED -	
PLOT DATE = 2/21/2025	CHECKED - TJE	REVISED -	

STATE OF ILLINOIS
DEPARTMENT OF TRANSPORTATION

PIER MODIFICATION DETAILS (2 OF 3)
STRUCTURE NO. 016-0378 (NB)

SHEET 68 OF 80 SHEETS

F.A.P. RTE.	SECTION	COUNTY	TOTAL SHEETS	SHEET NO.
342	2018-100-BR	COOK	1351	815

CONTRACT NO. 62N91
ILLINOIS | FED. AID PROJECT

MODEL: Default
FILE NAME: S:\IOL\6300--6399\6346113\Drawings\CAD\Micros-Sst\CAD_Sheets\0160378213-C2-068-PMID2-SAI.dgn
2/21/2025 5:09:28 PM

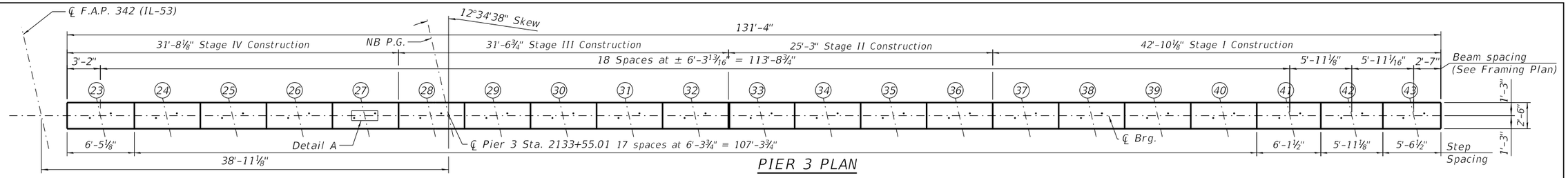

PIER 3 PLAN

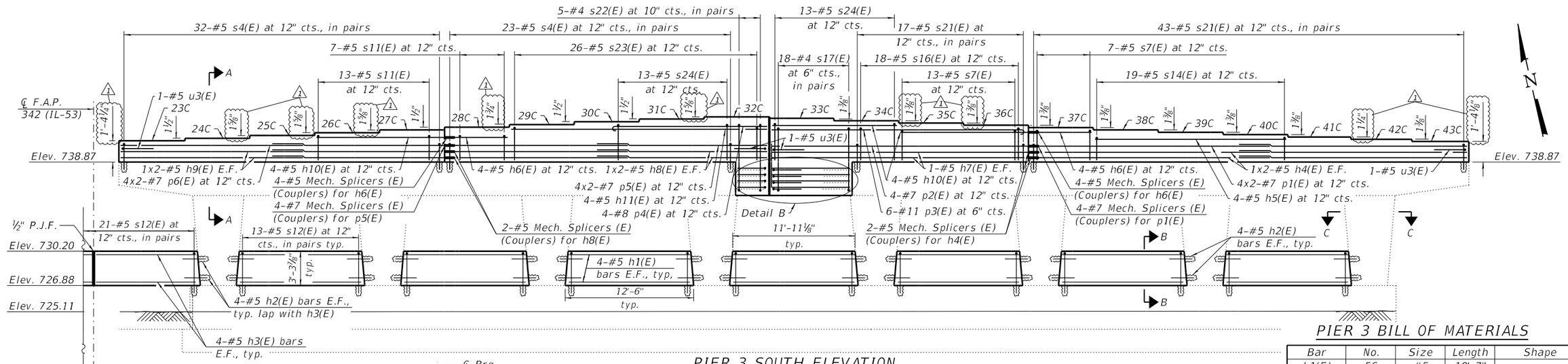

PIER 3 SOUTH ELEVATION

(Looking North)

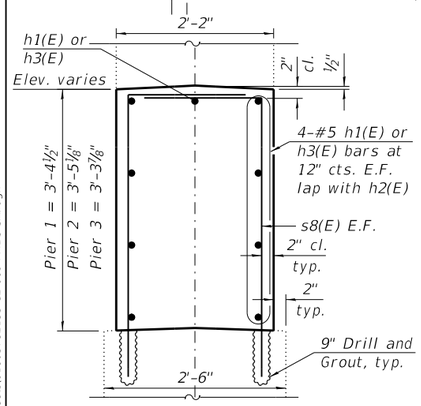

SECTION B-B

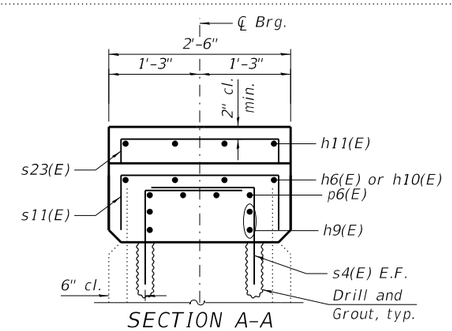

SECTION A-A

(Similar bars not shown for clarity)

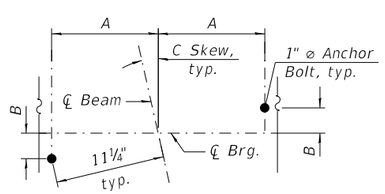

ANCHOR BOLT LOCATION PLAN DETAIL A

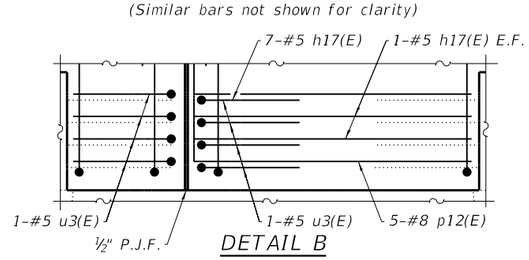

DETAIL B

ANCHOR BOLT LOCATION

Beamline	A	B	C
23-41	11"	2 7/16"	12°34'38"
42	10 15/16"	2 1/2"	12°45'34"
43	10 15/16"	2 1/2"	12°56'26"

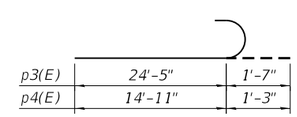

BARS p3(E), p4(E)

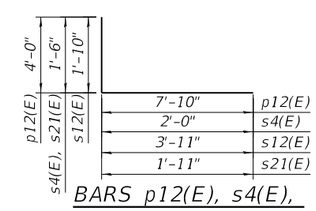

BARS p12(E), s4(E), s12(E), s21(E)

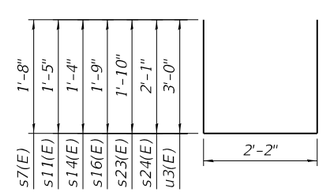

BARS s7(E), s11(E), s14(E), s16(E), s23(E), s24(E) AND u3(E)

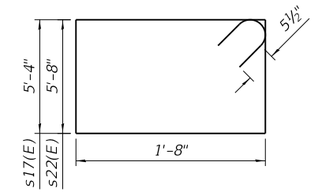

BARS s17(E), s22(E)

PIER 3 CAP ELEVATIONS

Pier 3	Elev.
23C	740.23
24C	740.36
25C	740.49
26C	740.63
27C	740.76
28C	740.89
29C	741.03
30C	741.16
31C	741.28
32C	741.42
33C	741.35
34C	741.24
35C	741.12
36C	741.01
37C	740.89
38C	740.78
39C	740.66
40C	740.55
41C	740.43
42C	740.33
43C	740.21

PIER 3 BILL OF MATERIALS

Bar	No.	Size	Length	Shape
h1(E)	56	#5	10'-7"	
h2(E)	128	#5	3'-2"	
h3(E)	16	#5	9'-10"	
h4(E)	8	#5	22'-9"	
h5(E)	4	#5	18'-7"	
h6(E)	8	#5	6'-0"	
h7(E)	4	#5	24'-11"	
h8(E)	8	#5	17'-1"	
h9(E)	8	#5	17'-2"	
h10(E)	12	#5	12'-4"	
h11(E)	4	#5	25'-0"	
h17(E)	11	#5	8'-6"	
p1(E)	8	#7	23'-4"	
p2(E)	4	#7	24'-11"	
p3(E)	6	#11	26'-0"	
p4(E)	4	#8	16'-2"	
p5(E)	8	#7	17'-8"	
p6(E)	8	#7	17'-9"	
p12(E)	5	#8	11'-10"	
s4(E)	110	#5	3'-6"	
s7(E)	20	#5	5'-6"	
s11(E)	20	#5	5'-0"	
s12(E)	224	#5	5'-9"	
s14(E)	19	#5	4'-10"	
s16(E)	18	#5	5'-9"	
s17(E)	36	#4	14'-11"	
s21(E)	120	#5	3'-5"	
s22(E)	10	#4	15'-8"	
s23(E)	26	#5	5'-10"	
s24(E)	26	#5	6'-4"	
u3(E)	12	#5	8'-2"	
Concrete Structures			CU YD	55.6
Reinforcement Bars, Epoxy Coated			POUND	8,090
Concrete Sealer			SQ FT	1,502

Notes:
1. Cost of PJF shall be included with Concrete Structures.
2. Cost of drilling and grouting reinforcing bars included in cost of Concrete Structures.
3. Bars shall be drilled and set according to Article 584 of the Standard Specifications. Bars shall have a 9" minimum embedment depth.
4. Bars indicated thus 2x3-#5 etc. indicates 2 lines of bars with 3 lengths per line.
5. See sheet 67 of 80 for Section C-C.

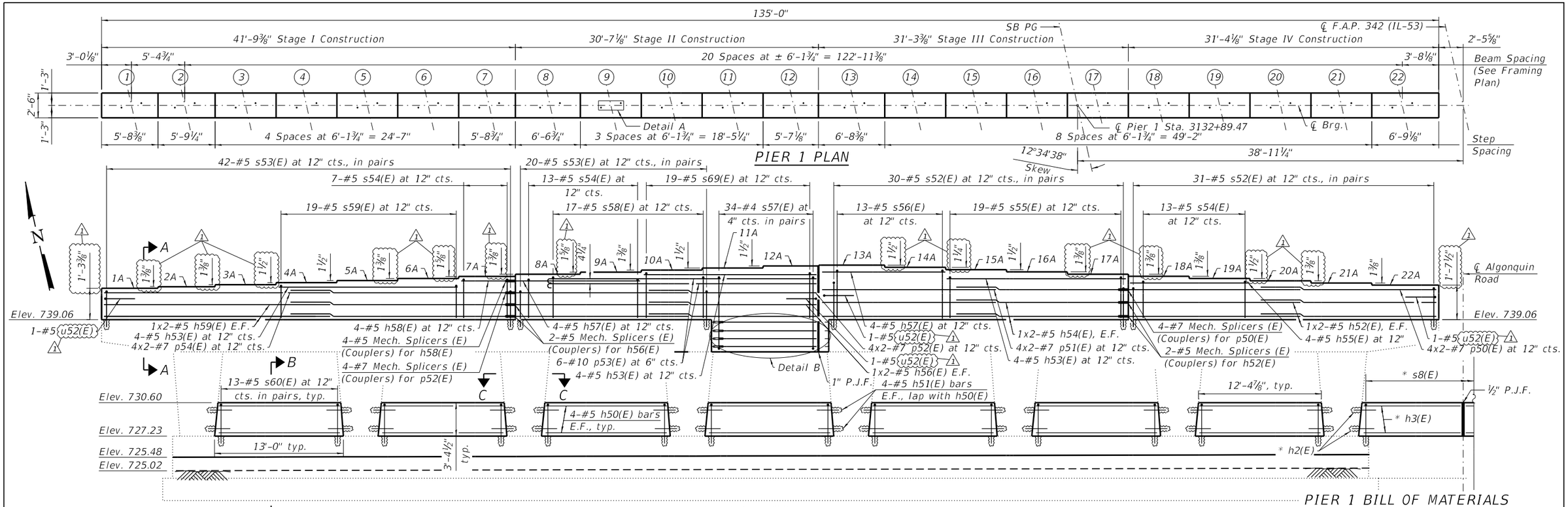

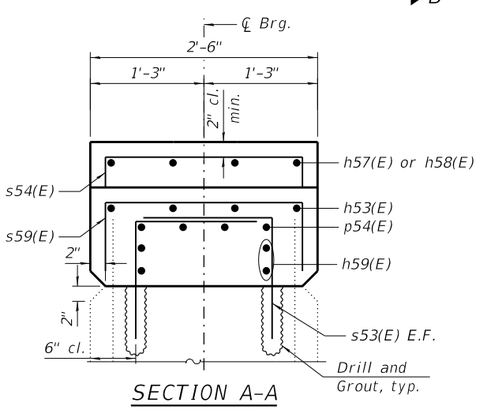

SECTION A-A
(Similar bars not shown for clarity)

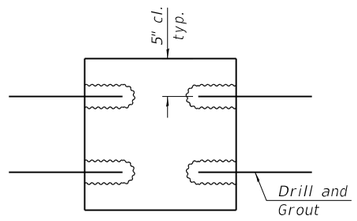

SECTION C-C

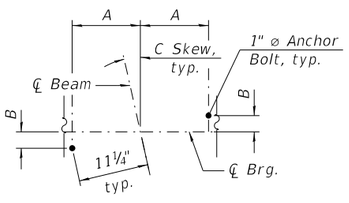

ANCHOR BOLT LOCATION PLAN
DETAIL A

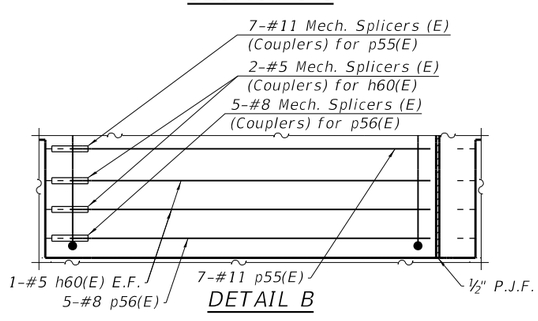

DETAIL B

ANCHOR BOLT LOCATION

Beamline	A	B	C
1	10 15/16"	2 1/2"	12°56'09"
2-22	11"	2 7/16"	12°34'38"

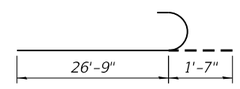

BARS p53(E)

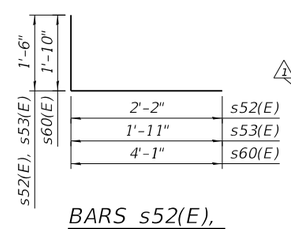

BARS s52(E), s53(E), s60(E)

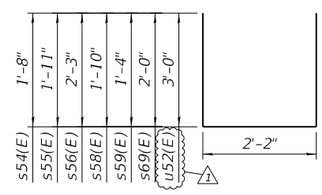

BARS s54(E)-s56(E), s58(E), s59(E), s69(E), AND u52(E)

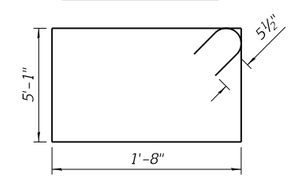

BARS s57(E)

PIER 1 CAP ELEVATIONS

Pier 1	Elev.
1A	740.35
2A	740.46
3A	740.58
4A	740.70
5A	740.83
6A	740.94
7A	741.08
8A	741.19
9A	741.33
10A	741.44
11A	741.57
12A	741.69
13A	741.74
14A	741.62
15A	741.51
16A	741.39
17A	741.27
18A	741.16
19A	741.04
20A	740.92
21A	740.80
22A	740.69

PIER 1 BILL OF MATERIALS

Bar	No.	Size	Length	Shape
h50(E)	56	#5	12'-1"	
h51(E)	112	#5	3'-6"	
h52(E)	8	#5	17'-1"	
h53(E)	12	#5	18'-1"	
h54(E)	8	#5	17'-0"	
h55(E)	4	#5	12'-0"	
h56(E)	8	#5	16'-8"	
h57(E)	8	#5	12'-5"	
h58(E)	4	#5	5'-5"	
h59(E)	8	#5	22'-4"	
h60(E)	4	#5	10'-3"	
p50(E)	8	#7	17'-8"	
p51(E)	8	#7	17'-7"	
p52(E)	8	#7	17'-4"	
p53(E)	12	#10	28'-4"	
p54(E)	8	#7	22'-11"	
p55(E)	7	#11	10'-3"	
p56(E)	5	#8	10'-3"	
s52(E)	122	#5	3'-8"	
s53(E)	124	#5	3'-5"	
s54(E)	33	#5	5'-6"	
s55(E)	19	#5	5'-11"	
s56(E)	13	#5	6'-7"	
s57(E)	68	#4	14'-4"	
s58(E)	17	#5	5'-9"	
s59(E)	19	#5	4'-10"	
s60(E)	182	#5	5'-11"	
s69(E)	19	#5	6'-2"	
u52(E)	4	#5	8'-2"	
Concrete Structures			CU YD	54.0
Reinforcement Bars, Epoxy Coated			POUND	8,830
Concrete Sealer			SQ FT	1,546

Notes:
1. See sheet 72 of 80 for bar Section B-B.
2. Cost of drilling and grouting reinforcing bars included in cost of Concrete Structures.
3. Bars shall be drilled and set according to Article 584 of the Standard Specifications. Bars shall have a 9" minimum embedment depth.
4. Bars indicated thus 2x3-#5 etc. indicates 2 lines of bars with 3 lengths per line.

STRAND ASSOCIATES®
1170 SOUTH HOUBOLT ROAD
JOLIET, ILLINOIS 60431
(815) 744-4200
IDFPR NO. 184-001273

USER NAME = CodyH	DESIGNED - ELR	REVISED - 1 02/18/2025	
	CHECKED - NDR	REVISED -	
PLOT SCALE = 0:2.0000 ':" / in.	DRAWN - CJH	REVISED -	
PLOT DATE = 2/21/2025	CHECKED - TJE	REVISED -	

STATE OF ILLINOIS
DEPARTMENT OF TRANSPORTATION

PIER MODIFICATION DETAILS (1 OF 3)
STRUCTURE NO. 016-2133 (SB)

SHEET 70 OF 80 SHEETS

F.A.P. RTE.	SECTION	COUNTY	TOTAL SHEETS	SHEET NO.
342	2018-100-BR	COOK	1351	817
		CONTRACT NO. 62N91		
	ILLINOIS	FED. AID PROJECT		

MODEL: Default
FILE NAME: S:\IDL\16300-63991634611\3\Drawings\CAD\Micros-SS4\CAD_Sheets\016033782133-C2-070-PMD1-SA1.dgn
2/21/2025 5:09:34 PM

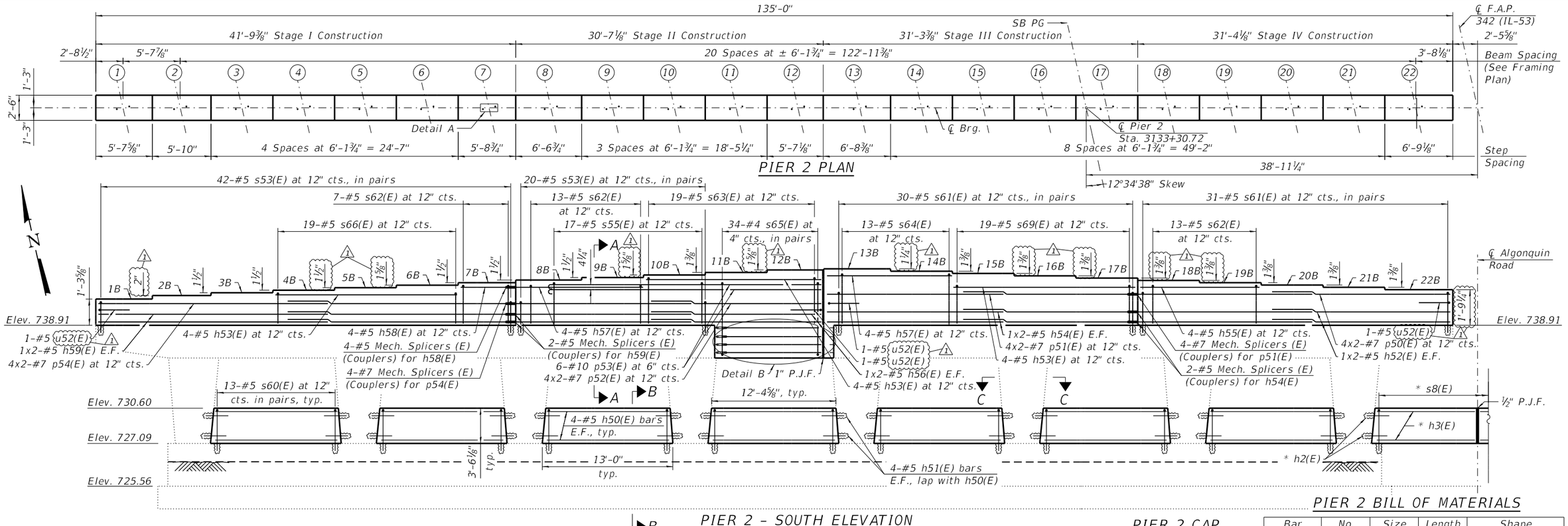

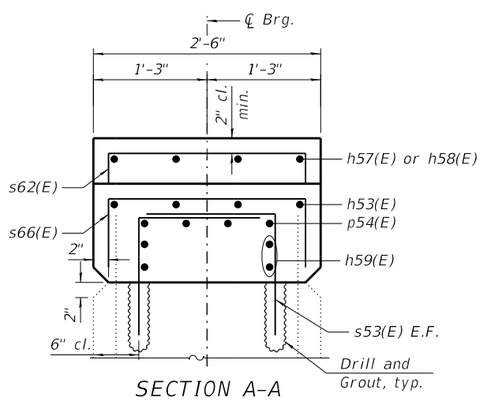

SECTION A-A

(Similar bars not shown for clarity)

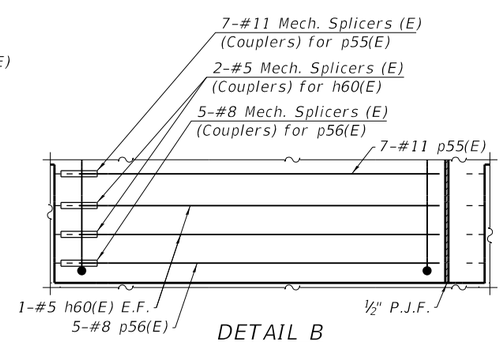

DETAIL B

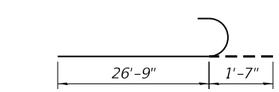

BARS p53(E)

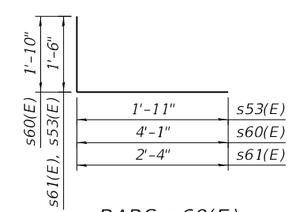

BARS s60(E), s61(E), s53(E)

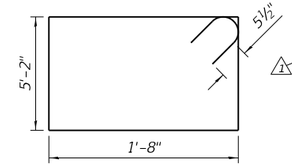

BARS s65(E)

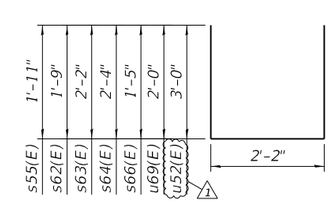

BARS s55(E), s62(E)-s64(E), s66(E), s69(E), u52(E)

PIER 2 CAP ELEVATIONS

Pier 2	Elev.
1B	740.22
2B	740.39
3B	740.51
4B	740.64
5B	740.76
6B	740.90
7B	741.02
8B	741.15
9B	741.27
10B	741.41
11B	741.52
12B	741.66
13B	741.69
14B	741.59
15B	741.47
16B	741.36
17B	741.24
18B	741.13
19B	741.01
20B	740.90
21B	740.78
22B	740.67

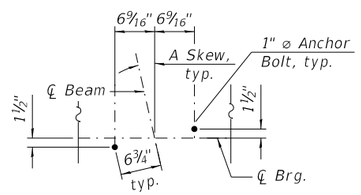

ANCHOR BOLT LOCATION PLAN

DETAIL A

ANCHOR BOLT LAYOUT

Beamline	A	B	C
1	10 15/16"	2 1/2"	12°56'09"
2-22	11"	2 7/16"	12°34'38"

Notes:

1. See sheet 72 of 80 for bar Section B-B.
2. Cost of drilling and grouting reinforcing bars included in cost of Concrete Structures.
3. Bars shall be drilled and set according to Article 584 of the Standard Specifications. Bars shall have a 9" minimum embedment depth.
4. Bars indicated thus 2x3-#5 etc. indicates 2 lines of bars with 3 lengths per line.
5. See sheet 70 of 80 for Section C-C.

PIER 2 BILL OF MATERIALS

Bar	No.	Size	Length	Shape
h50(E)	56	#5	12'-1"	
h51(E)	112	#5	3'-6"	
h52(E)	8	#5	17'-1"	
h53(E)	12	#5	18'-1"	
h54(E)	8	#5	17'-0"	
h55(E)	4	#5	11'-12"	
h56(E)	8	#5	16'-8"	
h57(E)	8	#5	12'-5"	
h58(E)	4	#5	5'-5"	
h59(E)	8	#5	22'-4"	
h60(E)	4	#5	10'-6"	
p50(E)	8	#7	17'-8"	
p51(E)	8	#7	17'-7"	
p52(E)	8	#7	17'-4"	
p53(E)	12	#10	28'-4"	
p54(E)	8	#7	22'-11"	
p55(E)	7	#11	10'-6"	
p56(E)	5	#8	10'-6"	
s53(E)	124	#5	3'-5"	
s55(E)	17	#5	6'-0"	
s60(E)	182	#5	5'-11"	
s61(E)	122	#5	3'-10"	
s62(E)	33	#5	5'-8"	
s63(E)	19	#5	6'-6"	
s64(E)	13	#5	6'-10"	
s65(E)	68	#4	14'-8"	
s66(E)	19	#5	5'-0"	
s69(E)	19	#5	6'-2"	
u52(E)	4	#5	8'-2"	
Concrete Structures			CU YD	55.9
Reinforcement Bars, Epoxy Coated			POUND	8,900
Concrete Sealer			SQ FT	1,546

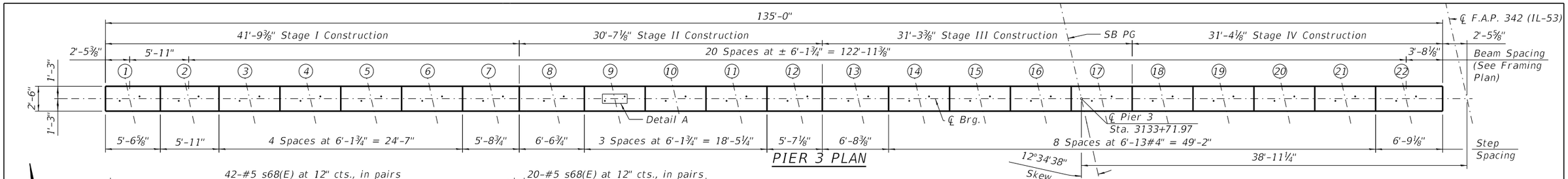

PIER 3 PLAN

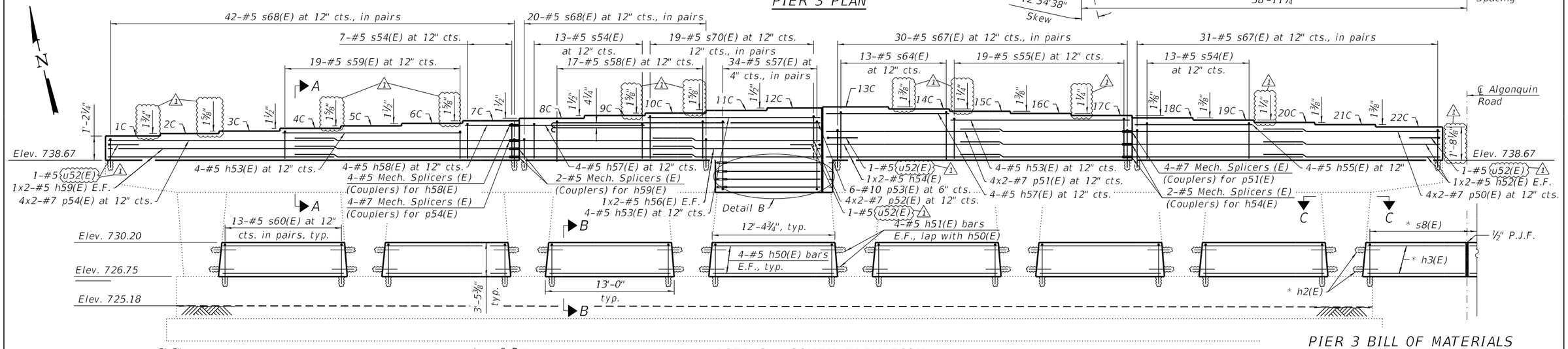

PIER 3 - SOUTH ELEVATION

(Looking North)

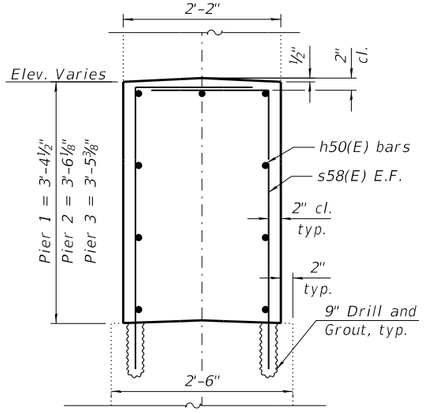

SECTION B-B

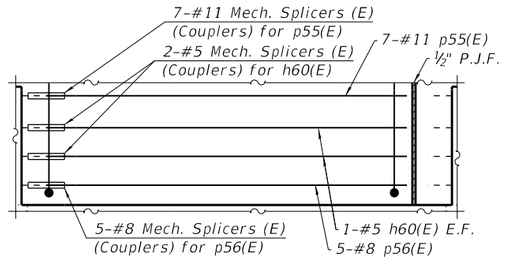

DETAIL B

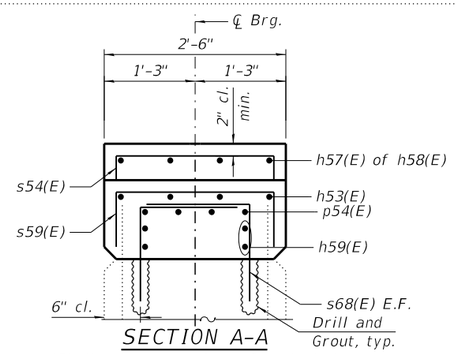

SECTION A-A

(Similar bars not shown for clarity)

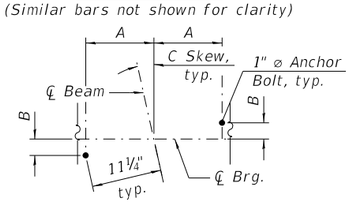

ANCHOR BOLT LOCATION PLAN

DETAIL A

ANCHOR BOLT LAYOUT

Beamline	A	B	C
1	10 15/16"	2 1/2"	12°56'09"
2-22	11"	2 7/16"	12°34'38"

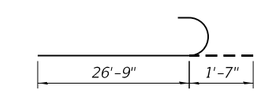

BARS p53(E)

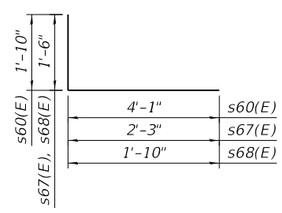

BARS s60(E), s67(E), s68(E)

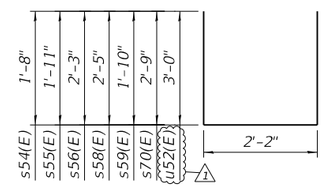

BARS s54(E)-s56(E), s58(E), s59(E), s70(E), u52(E)

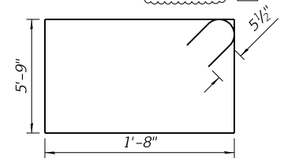

BARS s57(E)

PIER 3 CAP ELEVATIONS

Pier 3	Elev.
1C	739.86
2C	739.99
3C	740.12
4C	740.25
5C	740.38
6C	740.51
7C	740.64
8C	740.77
9C	740.90
10C	741.03
11C	741.16
12C	741.29
13C	741.34
14C	741.22
15C	741.11
16C	741.00
17C	740.89
18C	740.78
19C	740.66
20C	740.56
21C	740.44
22C	740.33

MINIMUM BAR LAP

#5 Bar = 3'-0"

PIER 3 BILL OF MATERIALS

Bar	No.	Size	Length	Shape
h50(E)	56	#5	12'-1"	
h51(E)	112	#5	3'-6"	
h52(E)	8	#5	17'-1"	
h53(E)	12	#5	18'-1"	
h54(E)	8	#5	17'-0"	
h55(E)	4	#5	6'-4"	
h56(E)	8	#5	16'-8"	
h57(E)	8	#5	12'-5"	
h58(E)	4	#5	5'-5"	
h59(E)	8	#5	22'-4"	
h60(E)	4	#5	10'-6"	
p50(E)	8	#7	17'-8"	
p51(E)	8	#7	17'-7"	
p52(E)	8	#7	17'-4"	
p53(E)	12	#10	28'-4"	
p54(E)	8	#7	22'-11"	
p55(E)	7	#11	10'-6"	
p56(E)	5	#8	10'-6"	
s54(E)	39	#5	5'-6"	
s55(E)	19	#5	6'-0"	
s56(E)	13	#5	6'-7"	
s57(E)	68	#4	15'-8"	
s58(E)	17	#5	7'-1"	
s59(E)	19	#5	5'-10"	
s60(E)	182	#5	5'-11"	
s67(E)	122	#5	3'-9"	
s68(E)	124	#5	3'-4"	
s70(E)	19	#5	7'-8"	
u52(E)	4	#5	8'-2"	

Concrete Structures	CU YD	54.8
Reinforcement Bars, Epoxy Coated	POUND	8,990
Concrete Sealer	SQ FT	1,546

Notes:
1. Cost of PJF shall be included with Concrete Structures.
2. Cost of drilling and grouting reinforcing bars included in cost of Concrete Structures.
3. Bars shall be drilled and set according to Article 584 of the Standard Specifications. Bars shall have a 9" minimum embedment depth.
4. Bars indicated thus 2x3-#5 etc. indicates 2 lines of bars with 3 lengths per line.
5. See sheet 70 of 80 for Section C-C.

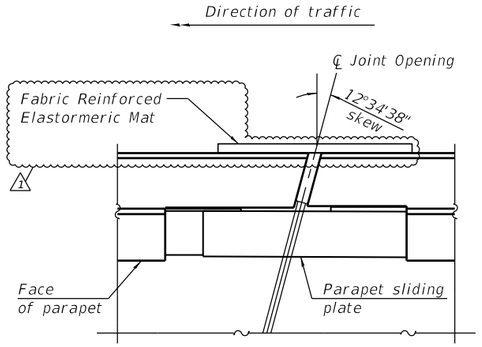

PLAN AT END OF APPROACH

(Drawn for SB IL-53 North approach sliding plate detail, other views similar.)

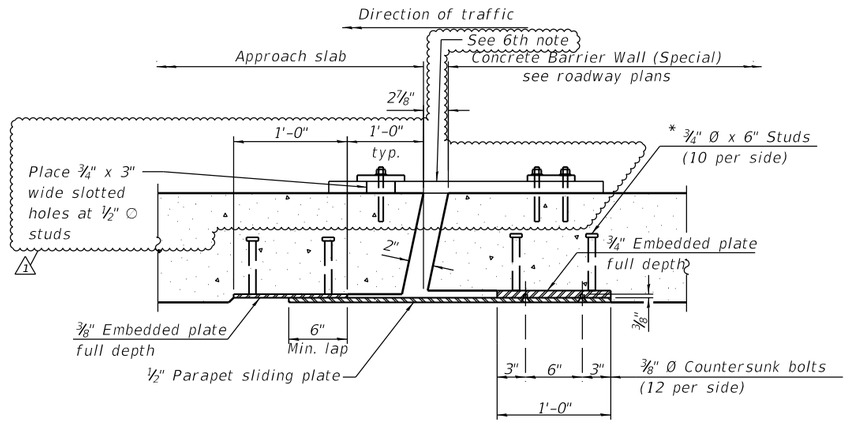

SECTION B-B

(Drawn for SB IL-53 North approach sliding plate detail, other views similar.)

Notes:

The preformed pavement joint seal shall be made continuous and shall have a minimum thickness of ¼". The configuration of the stripseal shall match the configuration of the locking edge rails. Open or "webbed" strip seal gland configurations are not permitted. The gland shall be sized for a maximum rated movement of 4 inches.

The manufacturer's recommended installation methods shall be followed.

All steel components shall be galvanized after fabrication according to Article 520.03 of the Standard Specifications.

Cost of parapet sliding plates, embedded plates, and anchorage studs included with Concrete Barrier Wall (Special)

39" constant slope barrier shown, 44" constant slope barrier similar as noted.

Install Fabric Reinforcement Elastormeric Mat according to Section 1028 of the Standard Specifications. Fabirc mat shall be 28" wide and attached full height to the parpet with a ⅜" x 6" steel plate and ½" Ø studs with nuts and washers at 12" cts. Cost included with Concrete Barrier Wall (Special).

1

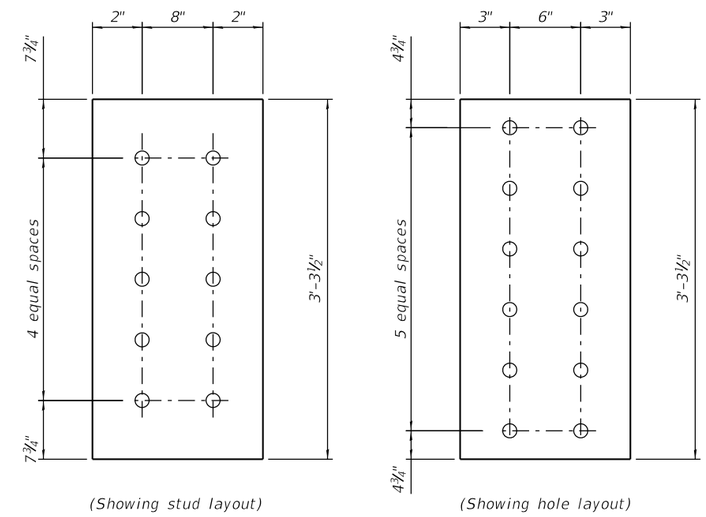

EMBEDDED PLATE DETAIL

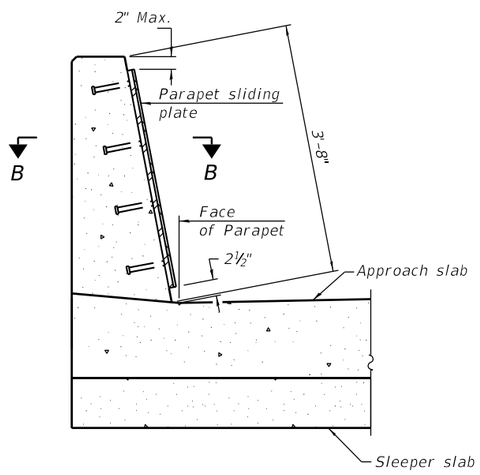

SECTION AT PARAPET

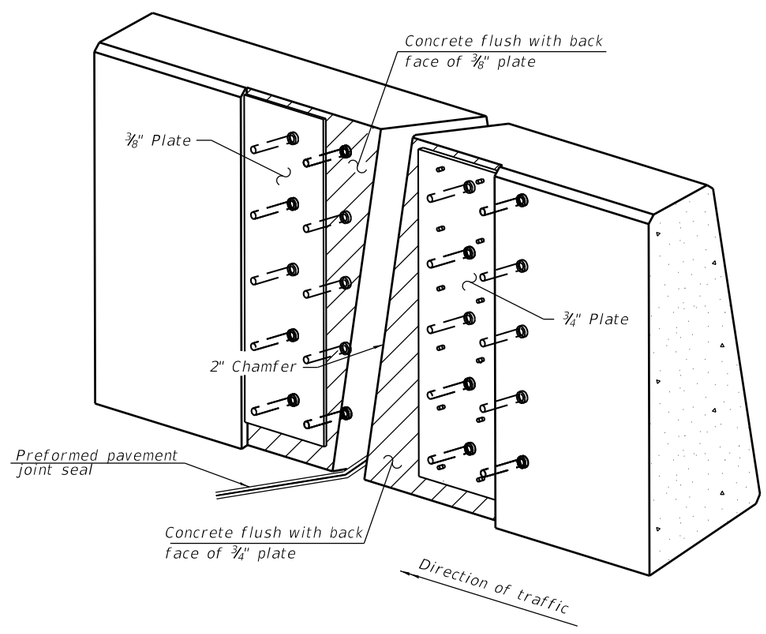

TRIMETRIC VIEW

(Showing embedded plates only)

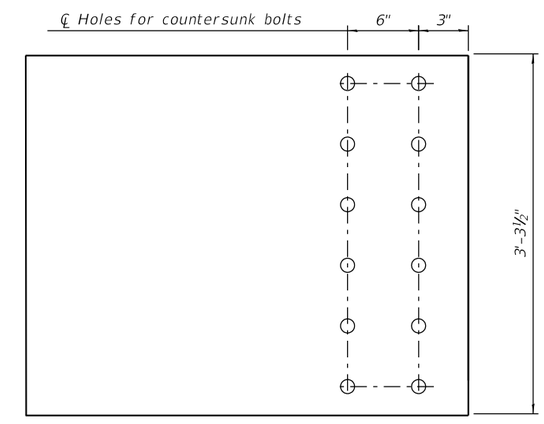

MEDIAN SLIDING PLATE

Notes:

1. See bridge approach sheet 53

MODEL: Default
FILE NAME: S:\IDL\6300-6399\6346\1131\Drawings\CAD\Micros-SS4\CAD_Sheets\01603782133-C2-077-MSP.dgn

STRAND ASSOCIATES
1170 SOUTH HOUBOLT ROAD
JOLIET, ILLINOIS 60431
(815) 744-4200
IDFPR NO. 184-001273

USER NAME = CodyH	DESIGNED -	REVISED - 1 02/18/2025	STATE OF ILLINOIS DEPARTMENT OF TRANSPORTATION
	CHECKED - NDR	REVISED -	
PLOT SCALE = 0:2.0000 ':" / in.	DRAWN - CJH	REVISED -	
PLOT DATE = 2/18/2025	CHECKED - TJE	REVISED -	

MEDIAN SLIDING PLATE
STRUCTURE NO. 016-0378 (NB) AND 016-2133 (SB)

SHEET 77 OF 80 SHEETS

F.A.P. RTE.	SECTION	COUNTY	TOTAL SHEETS	SHEET NO.
342	2018-100-BR	COOK	1351	824
		CONTRACT NO. 62N91		
	ILLINOIS	FED. AID PROJECT		

2/18/2025 7:56:42 AM

Benchmark: BM 38 Elev. 736.25. Cut cross on the East side of the third concrete light pole foundation North of Algonquin Rd, and just West of the Southbound entrance ramp to IL Rte. 53.

Exisitng Structure: Low profile cast-in-place concrete retaining wall with unknown foundation type and mounted fence railing. Structure to be completely removed.

Traffic Control: Shoulder closures are required along Algonquin Road (IL-62) Eastbound during wall construction. Pedestrian traffic to be routed onto Algonquin Road for duration of construction.

Salvage: None

* Measured along F.F. of Wall

(1) Expansion Joint in Wall Stem

(2) Construction Joint in Wall Stem

STA. 112+22.26
BUILT 20XX BY
STATE OF ILLINOIS
F.A.P. RTE 339 SEC. 2018-100-BR
STR. NO. 016-W2501

NAME PLATE
(See Std. 515001)

LEGEND

- FO — Fiber Optic
- CTV — Cable TV
- E — Underground Electric
- A — Aerial Lines
- W — Underground Water
- Existing Fence
- Pipe Underdrains for Structures 4"
- Existing Storm Sewer
- Existing Sanitary Sewer
- Soil Boring

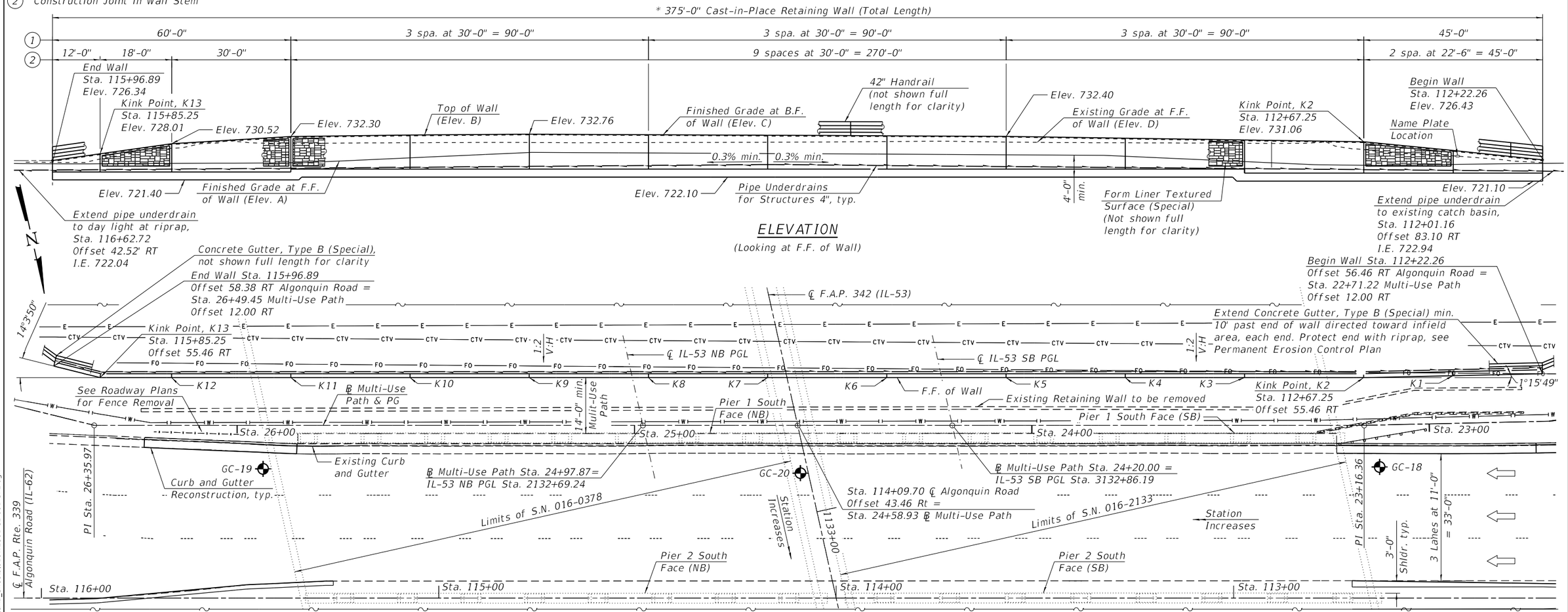

PLAN

Notes:
1. Offsets are measured from ℄ F.A.P. Rte. 339 Algonquin Road to the front face of wall.
2. F.F. = Front Face and B.F. = Back Face
3. Concrete Gutter, Type B (Special) and pipe underdrain not shown for clarity.
4. See sheet 4 of 9 for Elevations A, B, C, and D data

APPROVED
For Structural Adequacy Only
Engineer of Bridges & Structures

NATHAN D. RICK
081-005819
LICENSED STRUCTURAL ENGINEER OF ILLINOIS

Nathan D. Rick, S.E.
Licensed Structural Engineer
State of Illinois No. 081-007039
Registration Expires 11/30/2026

DESIGN SPECIFICATIONS

2020 AASHTO LRFD Bridge Design Specifications, 9th Edition with Interims

DESIGN STRESSES

FIELD UNITS

f'c = 3,500 psi (Substructure)
fy = 60,000 psi (Reinforcement)

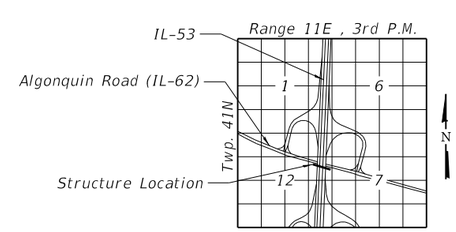

LOCATION SKETCH

GENERAL PLAN AND ELEVATION RETAINING WALL ALONG F.A.P. RTE. 339 - ALGONQUIN ROAD (IL-62) UNDER F.A.P. 342 (IL-53) SECTION 2018-100-BR COOK COUNTY STA. 112+22.26 TO STA. 115+96.89 STRUCTURE NO. 016-W2501

Benchmark: TBM 37 cut cross on the southeast corner of the westerly concrete foundation of an overhead sign that is approximately 380 feet north of salt creek and over the southbound lanes. elevation 718.951

Existing Structure: The structure carrying IL-53 (SN 016-0377) over Salt Creek was originally built in 1962 as Relocated SBI Route 53 (F.A. Route 61) under Project U-184(26), Section 531-I-B-7. In 1990, as part of Contract 80797, the asphalt overlay was removed, the top of the deck was scarified ½", and 2½" Microsilicia Concrete was overlaid. In 2010, as part of Contract 60I38, the deck had some partial and full depth concrete repairs, the abutments had several epoxy crack injections, and partial depth concrete repairs. The expansion joints at the abutments were removed and Silicone Joint Sealers were installed. Eighteen floor drain extensions were added to existing floor drains to extend the drains below the bottom web of the beams. Superstructure has an overall length of 63'-3" back to back of abutments and a width of 210'-0" out to out of deck. The northeast retaining wall has a length of 36'-7", the northwest retaining wall has a length of 37'-9½", the southeast retaining wall has a length of 37'-10", and the southwest retaining wall has a length of 28'-3¼". The southeast retaining wall between the mainline bridge and East Frontage Road bridge was leaning for several years, finally failing in 2017. The stem of the wall was replaced with a modified section in 2017 under contract 62D37, Section 2016-0551. The contractor will remove the deck, superstructure and partial height of existing abutment, leaving the rest of the abutment stem in-place, construct new bridge and remove and reconstruct the stems of the northeast, northwest, and southwest retaining walls.

Traffic Control: Traffic is to be maintained utilizing Stage Construction.

Salvage: No Salvage.

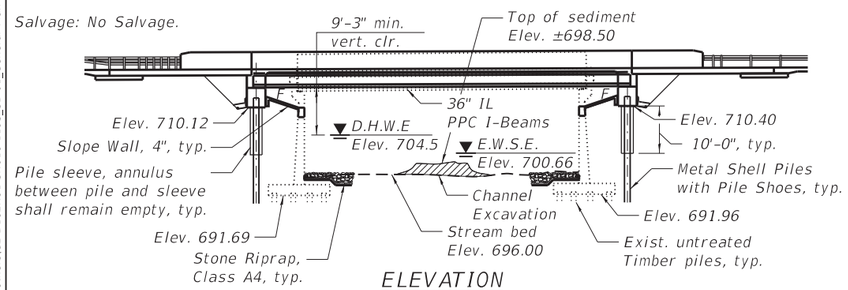

ELEVATION
(Looking West)

WATERWAY INFORMATION

Drainage Area = 17.0 square miles
Existing Overtopping Elev. = 717.9 at Sta. 1155+44.91
Proposed Overtopping Elev. = 717.9 at Sta. 1155+44.91

Flood Event	Freq. Yr.	Discharge C.F.S.	Opening Sq. Ft.		Nat. H.W.E.	Head - Ft.		Headwater El. - Ft.	
			Exist.	Prop.		Exist.	Prop.	Exist.	Prop.
Ten-Year	10	577	385	385	703.3	0.3	0.3	703.6	703.6
Design	50	947	454	454	704.5	0.3	0.3	704.8	704.8
Base	100	1129	485	485	705.0	0.2	0.2	705.2	705.2
Scour Check	200	1308	509	509	705.4	0.2	0.2	705.6	705.6
Max. Calc.	500	1547	541	541	706.0	0.2	0.2	706.2	706.2

10-Year Velocity through Existing Structure = 1.5 fps
10-Year Velocity through Proposed Structure = 1.5 fps
2-Year flow rate = 164 cfs

DESIGN SCOUR ELEVATION TABLE

Event / Limit State	Design Scour Elevations (ft.)		
	N. Abut.	S. Abut.	Item 113
Q100	691.60	691.60	5
Q200	690.60	690.60	
Design	691.60	691.60	
Check	690.60	690.60	

APPROVED
For Structural Adequacy Only
Engineer of Bridges & Structures

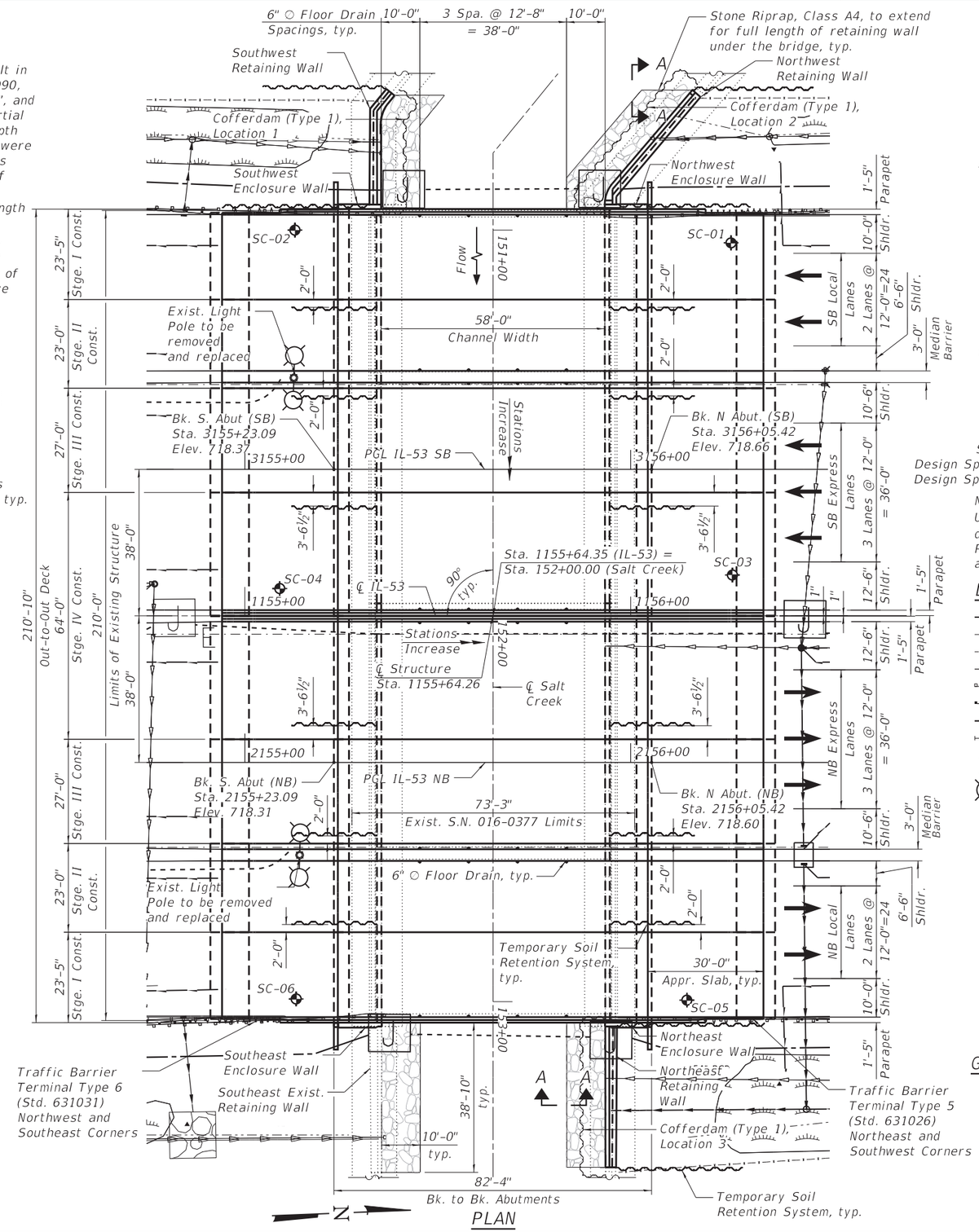

PLAN

DESIGN SPECIFICATIONS

BRIDGE
2020 AASHTO LRFD Bridge Design Specifications, 9th Edition
RETAINING WALLS
AASHTO Standard Specifications for Highway Bridges, 17th Edition, 2002

LOADING HL-93

Allow 50#/sq. ft. for future wearing surface.

DESIGN STRESSES

FIELD UNITS

f'c = 4,000 psi (Superstructure)
f'c = 3,500 psi (Substructure)
fy = 60,000 psi (Reinforcement)

PRECAST PRESTRESSED UNITS

f'c = 8,500 psi
f'ci = 6,500 psi
fpu = 270,000 psi (0.6"∅ low lax strands)
fpbt = 202,300 psi (0.6"∅ low lax strands)

FIELD UNITS (EXISTING CONSTRUCTION)

fc = 1,000 psi (Substructure)
fy = 20,000 psi (Reinforcement)

SEISMIC DATA

Seismic Performance Zone (SPZ) = 1
Design Spectral Acceleration at 1.0 sec. (SD1) = 0.083g
Design Spectral Acceleration at 0.2 sec. (SDS) = 0.144g
Soil Site Class = D

Note:
Up to ¼" to be ground off the bridge deck and bridge approach slabs. The Profile Grade shows the final grade after grinding.

LEGEND

- Exist. Storm Sewer
- Prop. Storm Sewer
- Exist. Fence
- Wetland
- Exist. Guardrails
- Prop. Guardrails
- Prop. Lighting Conduit
- Exist. Gaslines
- Temporary Soil Retention System
- Cofferdam (Type 1)
- Prop. Light Pole
- J Junction Box

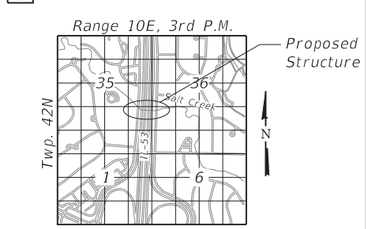

LOCATION SKETCH

GENERAL PLAN AND ELEVATION
F.A.P. RTE. 342 (IL-53)
OVER SALT CREEK
SECTION 2018-100-BR
COOK COUNTY
STA. 1155+64.26
STRUCTURE NO. 016-1195

STATE OF ILLINOIS
MOUSSA A. ISSA
081-005738
CHICAGO, ILLINOIS
LICENSED STRUCTURAL ENGINEER

Signed Moussa A. Issa
Dr. Moussa A. Issa, S.E. IL. Lic. No. 081-005738
Expires 11-30-2026
Date 01/22/2025 For Sheets SB-01 Thru SB-75

HBM ENGINEERING GROUP, LLC

USER NAME =	DESIGNED - EN, PG	REVISED -
	CHECKED - MI, JJS	REVISED -
PLOT SCALE =	DRAWN - PG	REVISED -
PLOT DATE =	CHECKED - MI, JJS	REVISED -

STATE OF ILLINOIS
DEPARTMENT OF TRANSPORTATION

SHEET SB-01 OF SB-75 SHEETS

F.A.P. RTE.	SECTION	COUNTY	TOTAL SHEETS	SHEET NO.
342	2018-100-BR	COOK	1351	854

CONTRACT NO. 62N91
ILLINOIS FED. AID PROJECT

MODEL: Default
FILE NAME: C:\Users\elton.nguyen\Strand Associates\6346.113 - IL 53 - Various Bridge & Culvert - Documents\Drawings\CAD\By Subconsultants\CAD_Sheets-by-others\C2-D162N91-SN016-1195_SB-01_General Plan & Elevation-HBM.dgn
1/22/2025 3:16:52 PM

Benchmark: TBM 21 – Cut cross on the southwest side of sign concrete foundation (IL 53 – IL 68 Dundee Road Exit ¼) west leg of sign.

Existing Structure: Structure 016-0973 & Structure 016-0371 were originally built in 1965 as S.B.I. Route 53 (F.A. Route 61), Section 531-3HB-2, contract number 23932. The structures consist of four-span PPC I-Beams with concrete deck slab on pile bent abutments and multi-column piers. The structures are 228'-3" back-to-back of abutments and 58'-4" out-to-out width of deck along with a skew of 46°05'30" ahead left.

Traffic to be maintained using stage construction.

No salvage

DESIGN STRESSES

FIELD UNITS (NEW CONSTRUCTION)
f'c = 4,000 psi (Superstructure)
f'c = 3,500 psi (Substructure)
fy = 60,000 psi (Reinforcement)

PRECAST PRESTRESSED UNITS (NEW CONSTRUCTION)
f'c = 8,500 psi
f'ci = 6,500 psi
fpu = 270,000 psi (0.6" ∅ low lax. strands)
fpbt = 202,300 psi (0.6" ∅ low lax. strands)

FIELD UNITS (EXISTING CONSTRUCTION)
fc = 1,400 psi
fs = 20,000 psi (Reinforcement)

SEISMIC DATA

Seismic Retrofit Category (SRC) = A
Design Spectral Acceleration at 1.0 sec. (SD1) = 0.081g
Design Spectral Acceleration at 0.2 sec. (SDS) =0.140g
Soil Site Class = D
Performance Level – PL1

LOADING HL-93

Allow 50#/sq. ft. for future wearing surface.

DESIGN SPECIFICATIONS

2002 AASHTO Standard Specifications for Highway Bridges, 17th Edition (Existing Construction)

2020 AASHTO LRFD Bridge Design Specifications, 9th Edition (New Construction)

2006 Seismic Retrofitting Manual for Highway Structures: Part 1 – Bridges (FHWA-HRT-06-032)

SCOPE OF WORK

1. Remove existing superstructure, bearings and approach slabs.
2. Modify existing abutments to semi-integral configurations and reconstruct wingwalls.
3. Reconstruct bearing seats at piers and extend crashwalls 5'-0" above adjacent grade line.
4. Construct new bearings and superstructure consisting of PPC I-Beam and concrete deck slab.
5. Construct new approach slabs.
6. Repair abutments and piers with formed concrete repairs and epoxy crack sealing.
7. Repair existing slopewalls using Slope Wall Repairs and Slope Wall Crack Sealing.

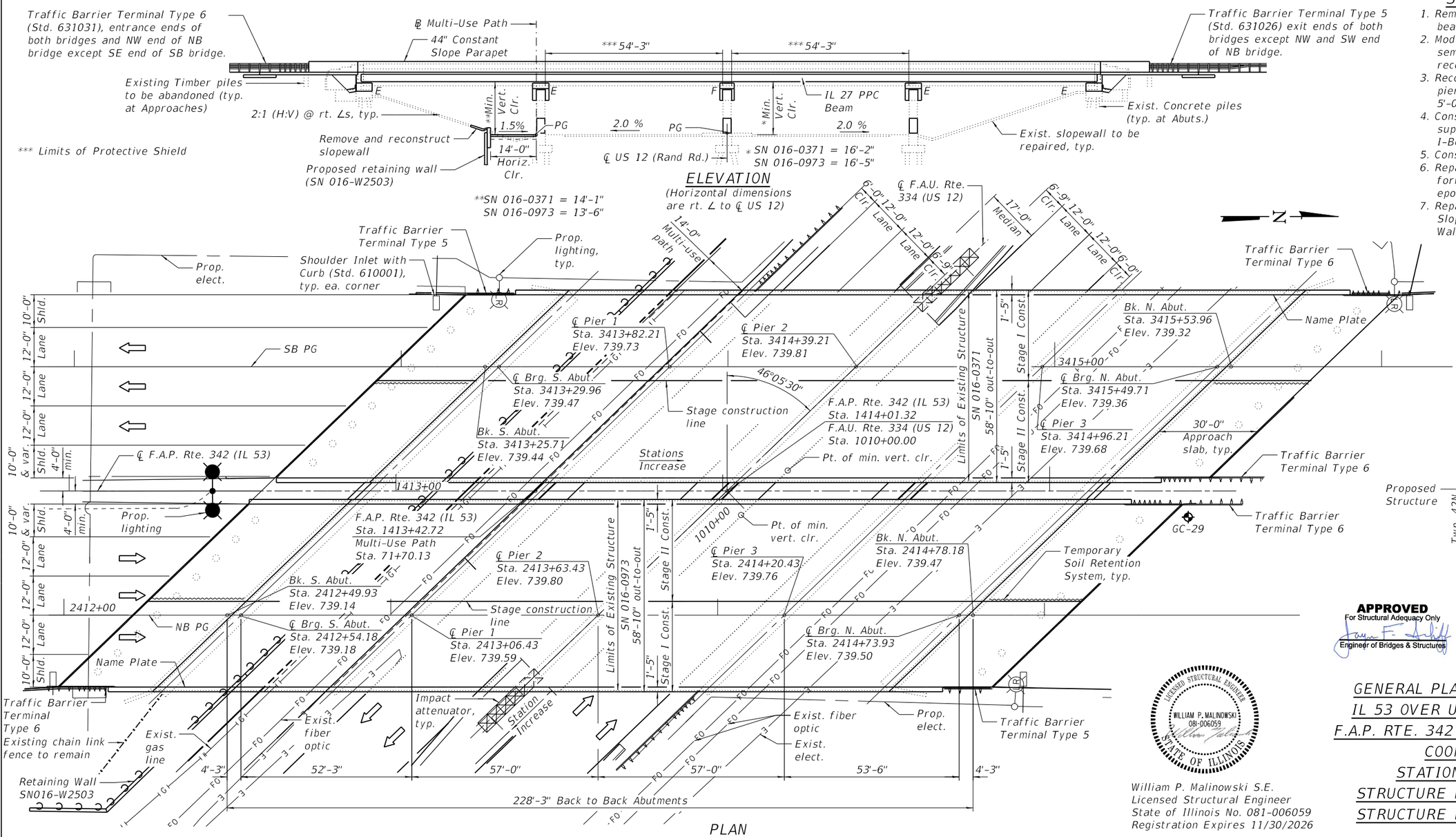

PLAN

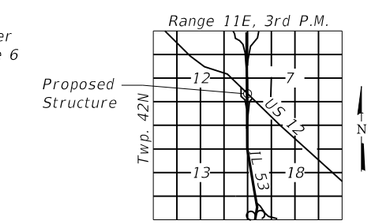

LOCATION SKETCH

APPROVED
For Structural Adequacy Only
Engineer of Bridges & Structures

LICENSED STRUCTURAL ENGINEER
WILLIAM P. MALINOWSKI
081-006059
STATE OF ILLINOIS

William P. Malinowski S.E.
Licensed Structural Engineer
State of Illinois No. 081-006059
Registration Expires 11/30/2026

GENERAL PLAN AND ELEVATION
IL 53 OVER US 12 (RAND ROAD)
F.A.P. RTE. 342 – SEC. 2018-100-BR
COOK COUNTY
STATION 1414+01.32
STRUCTURE NO. 016-0371 (SB)
STRUCTURE NO. 016-0973 (NB)

USER NAME = USGM717780	DESIGNED - BJD	REVISED -	STATE OF ILLINOIS DEPARTMENT OF TRANSPORTATION	
	CHECKED - MGH	REVISED -		
PLOT SCALE = 32:0.0000 ':" / in.	DRAWN - BJD	REVISED -		
PLOT DATE = 2/11/2025	CHECKED - MGH	REVISED -		

SHEET 1 OF 55 SHEETS

F.A.P. RTE.	SECTION	COUNTY	TOTAL SHEETS	SHEET NO.
342	2018-100-BR	COOK	1351	937
		CONTRACT NO. 62N91		
		ILLINOIS FED. AID PROJECT		

MODEL: Default
FILE NAME: pw:\\wsp-us-pw.bentley.com:wsp-us-pw-ILDocuments\Project 62N91-IL 53 Bridge\Structures\Sheets\C2-D162N91-0160973-01
2/11/2025 9:47:54 AM

GENERAL NOTES

1. Reinforcement bars designated (E) shall be epoxy coated.
2. The finishing machine rails shall be placed on the top of the top flange of the exterior beams within the deck. Beam blocks shall be placed between beams at all tie locations in each bay for the full width of the deck pour.
3. The concrete for bridge decks finished according to Article 503.16(a) of the Standard Specifications shall be placed and compacted parallel to the skew in uniform increments along centerline of bridge. The machine used for finished shall be set parallel to the skew for striking off and screeding the concrete.
4. Concrete Sealer shall be applied to all surfaces of only new substructure concrete and shall be applied before bearing and beam erection. A penetrating sealer from the Department's qualified product list shall be used for all vertical surfaces.
5. Plan dimensions and details relative to the existing structure have been taken from existing plans are subject to nominal construction variations. The Contractor shall field verify existing dimensions and details affecting new construction and make necessary approved adjustments prior to construction or ordering of materials. Such variations shall not be cause for additional compensation for a change in scope of the work, however, the Contractor will be paid for the quantity actually furnished at the unit price bid for the work.
6. Pinning of the Temporary Concrete Barrier in the top of the new bridge deck and approach slabs is not allowed.
7. See lighting plans for underpass lighting details related to the bridge.
8. Up to ¼ inch to be ground off the bridge deck and the bridge approach slabs. The Profile Grade shows the final grade after grinding.
9. Existing Name Plate shall be cleaned and relocated next to new Name Plate. Cost included with Name Plates.

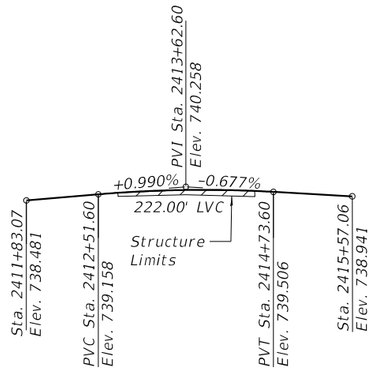

PROFILE GRADE
(Along NB PG IL 53)
The Profile Grade shows the final grade after grinding.

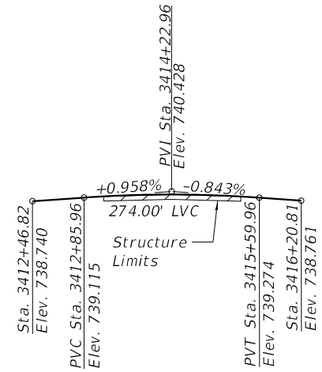

PROFILE GRADE
(Along SB PG IL 53)
The Profile Grade shows the final grade after grinding.

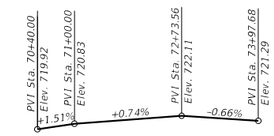

PROFILE GRADE
(Along North Edge of Multi-Use Path)

PROFILE GRADE
(Top of median along ℄ US 12)

STA. 3414+39.21
REBUILT 202X BY
STATE OF ILLINOIS
F.A.P. RTE. 342 (IL-53) SEC. 2018-100-BR
LOADING HL-93
STRUCTURE NO. 016-0371

NAME PLATE
See Std. 515001 and Note 9

STATION 2413+63.43
REBUILT 202X BY
STATE OF ILLINOIS
F.A.P. RTE. 342 (IL-53) SEC. 2018-100-BR
LOADING HL-93
STRUCTURE NO. 016-0973

NAME PLATE
See Std. 515001 and Note 9

INDEX OF SHEETS

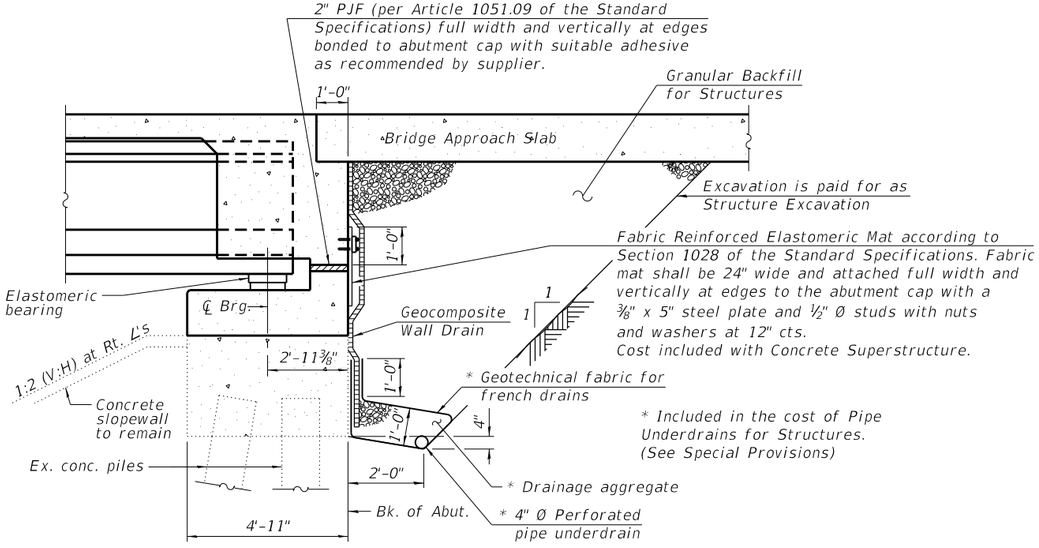

SECTION THRU SEMI-INTEGRAL ABUTMENT
(Horiz. dim. at Rt. ∠'s)

Note:
All drainage system components shall extend to 2'-0" from the end of each wingwall except an outlet pipe shall extend until intersecting with the side slopes. The pipes shall drain into concrete headwalls. (See Article 601.05 of the Standard Specifications and Highway Standard 601101).

TOTAL BILL OF MATERIAL

ITEM	UNIT	SUPER-STRUCTURE	SUB-STRUCTURE	TOTAL	
Removal of Existing Superstructure No. 4	Each	1	-	1	
Removal of Existing Superstructure No. 5	Each	1	-	1	
Concrete Removal	Cu. Yd.	-	96.0	96.0	1
Protective Shield	Sq. Yd.	1,375	-	1,375	
Structure Excavation	Cu. Yd.	-	594	594	
Concrete Structures	Cu. Yd.	-	627.1	627.1	1
Concrete Superstructure	Cu. Yd.	1,106.8	-	1,106.8	
Protective Coat	Sq. Yd.	3,810	-	3,810	
Concrete Superstructure (Approach Slab)	Sq. Yd.	332.4	-	332.4	
Furnishing and Erecting Precast Prestressed Concrete Beams, IL 27N	Foot	3,491.0	-	3,491.0	
Reinforcement Bars, Epoxy Coated	Pound	410,660	45,660	456,320	1
Bar Splicers	Each	2,244	100	2,344	
Name Plates	Each	2	-	2	
Elastomeric Bearing Assembly Type I	Each	96	-	96	
Anchor Bolts, 1"	Each	192	-	192	
Temporary Soil Retention System	Sq. Ft.	-	337	337	
Granular Backfill for Structures	Cu. Yd.	-	562	562	
Concrete Sealer	Sq. Ft.	-	2,056	2,056	
Epoxy Crack Injection	Foot	-	253	253	
Geocomposite Wall Drain	Sq. Yd.	-	330	330	
Pipe Underdrains for Structures 4"	Foot	-	398	398	
Bridge Deck Grooving (Longitudinal)	Sq. Yd.	2,284	-	2,284	
Bar Terminators	Each	112	-	112	
Structural Repair of Concrete (Depth Equal to or Less Than 5 Inches)	Sq. Yd.	-	25	25	
Diamond Grinding (Bridge Section)	Sq. Yd.	2,606	-	2,606	
Preformed Joint Filler	Foot	-	386	386	1

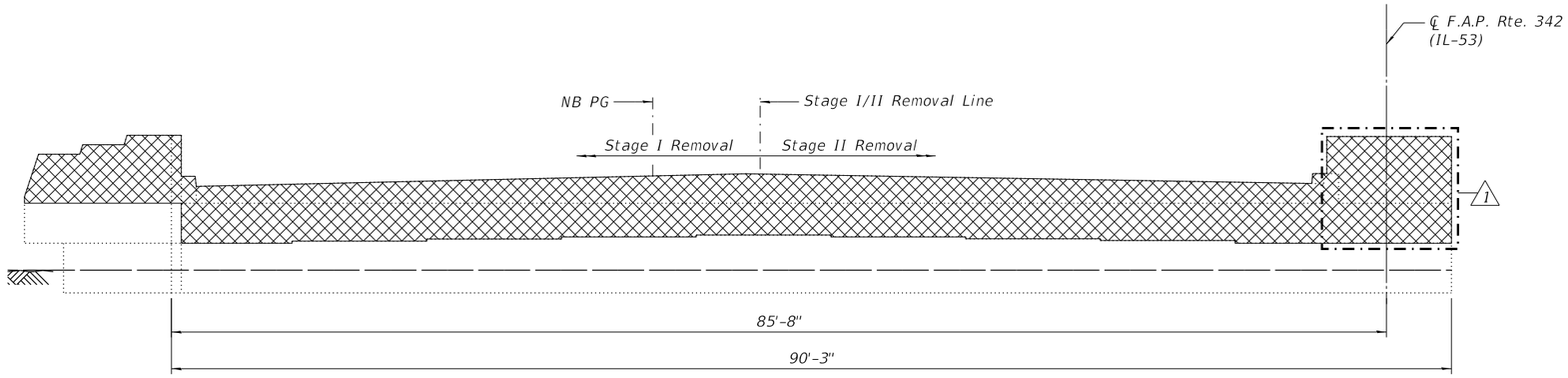

SOUTH ABUTMENT ELEVATION

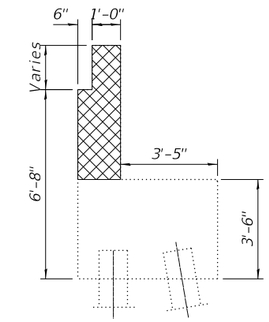

SECTION A-A

LEGEND

Concrete Removal

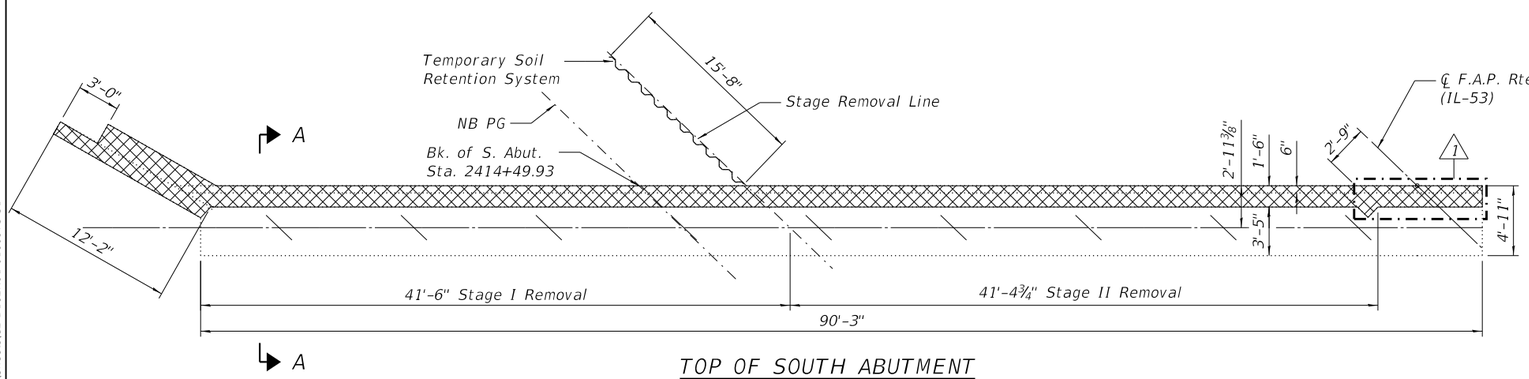

TOP OF SOUTH ABUTMENT

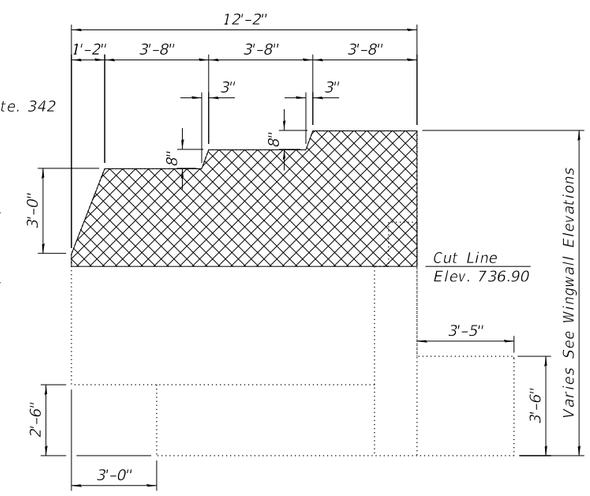

SOUTHEAST WINGWALL ELEVATION

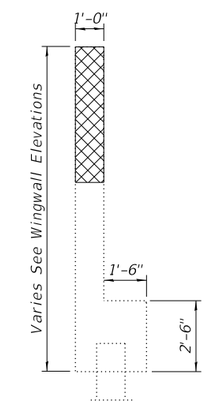

SECTION THRU WINGWALL

Notes:
1. Hatched areas indicate the limits of Concrete Removal.

2. Existing reinforcement extending into new construction shall be cleaned, straightened, and incorporated into the new construction. Cost included with Concrete Removal.

3. Existing reinforcement not extending into new construction shall be cut off flush and covered with a 2" layer of cement grout. Cost included with Concrete Removal.

4. The elevations shown above were calculated from the survey information provided by the district.

BILL OF MATERIAL

ITEM	UNIT	QUANTITY
Concrete Removal	Cu. Yd.	23.1 1

MODEL: Default
FILE NAME: pw:\\wsp-us-pw.bentley.com:wsp-us-pw-ILIDocuments\Project 62N91-IL 53 Bridge\Structures\Sheets\C2-D162N91-0160973-31

wsp	USER NAME = USGM717780	DESIGNED - BJD	REVISED - 1 2/18/2025 MGH	STATE OF ILLINOIS DEPARTMENT OF TRANSPORTATION
		CHECKED - MGH	REVISED -	
	PLOT SCALE = 0.1667 ' / in.	DRAWN - BJD	REVISED -	
	PLOT DATE = 2/17/2025	CHECKED - MGH	REVISED -	

NB SOUTH ABUTMENT REMOVAL AND REPAIRS
STRUCTURE NO. 016 - 0973 (NB)

SHEET 31 OF 55 SHEETS

F.A.S. RTE.	SECTION	COUNTY	TOTAL SHEETS	SHEET NO.
342	2018-100-BR	COOK	1290	967
		CONTRACT NO. 62N91		
	ILLINOIS	FED. AID PROJECT		

2/17/2025 3:25:00 PM

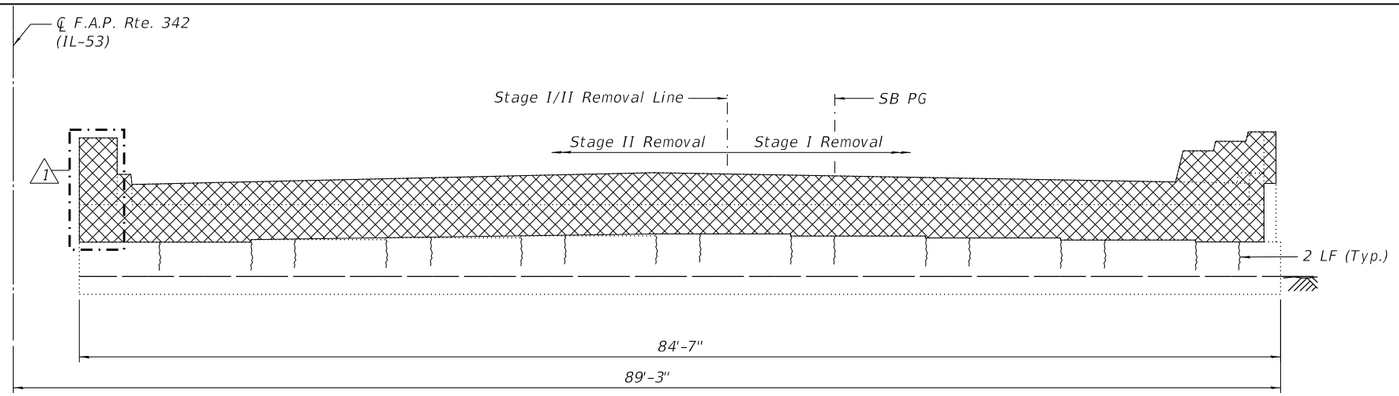

SOUTH ABUTMENT ELEVATION

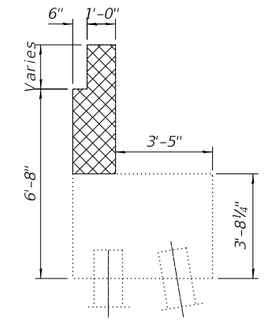

SECTION A-A

LEGEND

Concrete Removal

8 LF — Epoxy Crack Injection

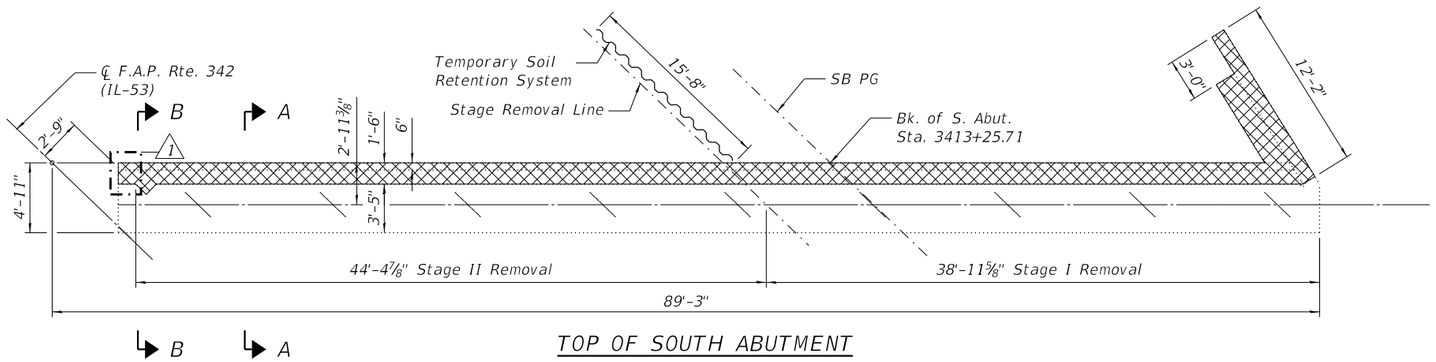

TOP OF SOUTH ABUTMENT

Elev. 739.35

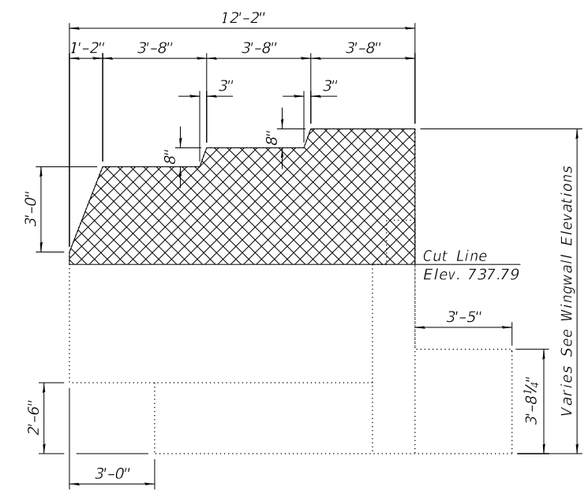

SOUTHWEST WINGWALL ELEVATION

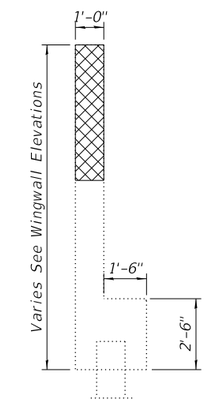

SECTION THU WINGWALL

Notes:
1. Hatched areas indicate the limits of Concrete Removal.
2. Existing reinforcement extending into new construction shall be cleaned, straightened, and incorporated into the new construction. Cost included with Concrete Removal.
3. Existing reinforcement not extending into new construction shall be cut off flush and covered with a 2" layer of cement grout. Cost included with Concrete Removal.
4. The elevations shown above were calculated from the survey information provided by the district.

BILL OF MATERIAL

ITEM	UNIT	QUANTITY
Concrete Removal	Cu. Yd.	20.0 1
Epoxy Crack Injection	Foot	34

MODEL: Default
FILE NAME: pw:\\wsp-us-pw.bentley.com:wsp-us-pw-IL\Documents\Project 62N91-IL 53 Bridge\Structures\Sheets\C2-D162N91-0160973-33
2/17/2025 3:25:09 PM

USER NAME = USGM717780	DESIGNED - BJD	REVISED - 1 2/18/2025 MGH	STATE OF ILLINOIS DEPARTMENT OF TRANSPORTATION
	CHECKED - MGH	REVISED -	
PLOT SCALE = 0.1667 ' / in.	DRAWN - BJD	REVISED -	
PLOT DATE = 2/17/2025	CHECKED - MGH	REVISED -	

SB SOUTH ABUTMENT REMOVAL AND REPAIRS
STRUCTURE NO. 016 - 0371 (SB)
SHEET 33 OF 55 SHEETS

F.A.S. RTE.	SECTION	COUNTY	TOTAL SHEETS	SHEET NO.
342	2018-100-BR	COOK	1290	969
		CONTRACT NO. 62N91		
		ILLINOIS FED. AID PROJECT		

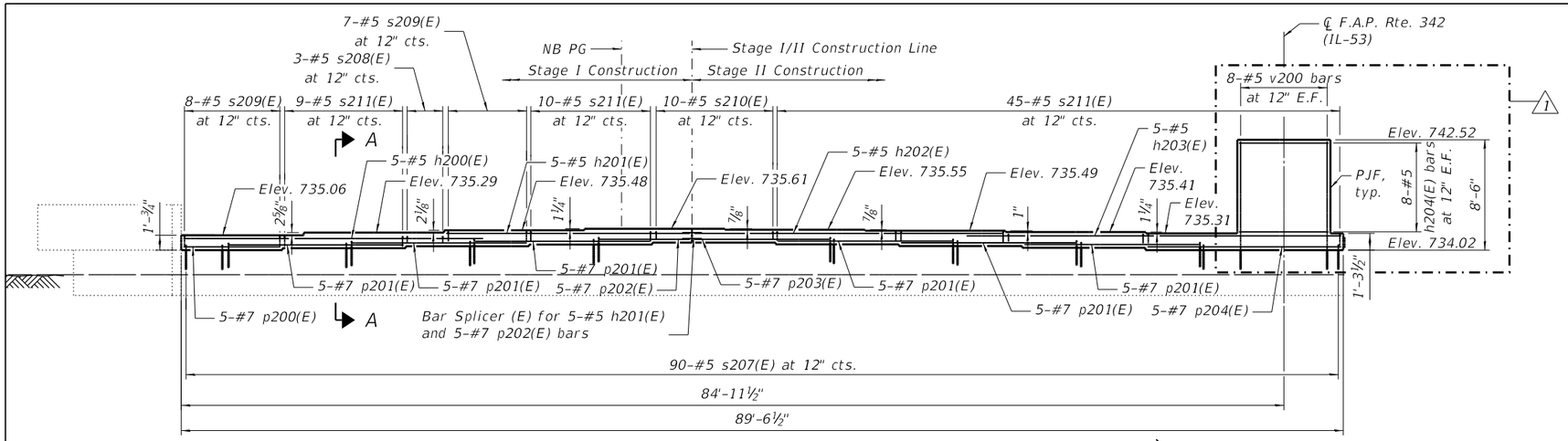

SOUTH ABUTMENT ELEVATION

(Looking South)

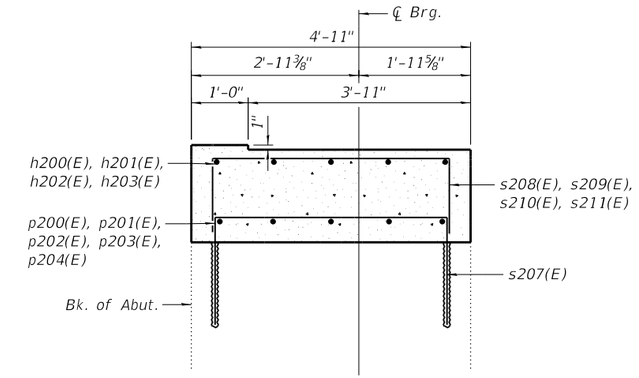

SECTION A-A

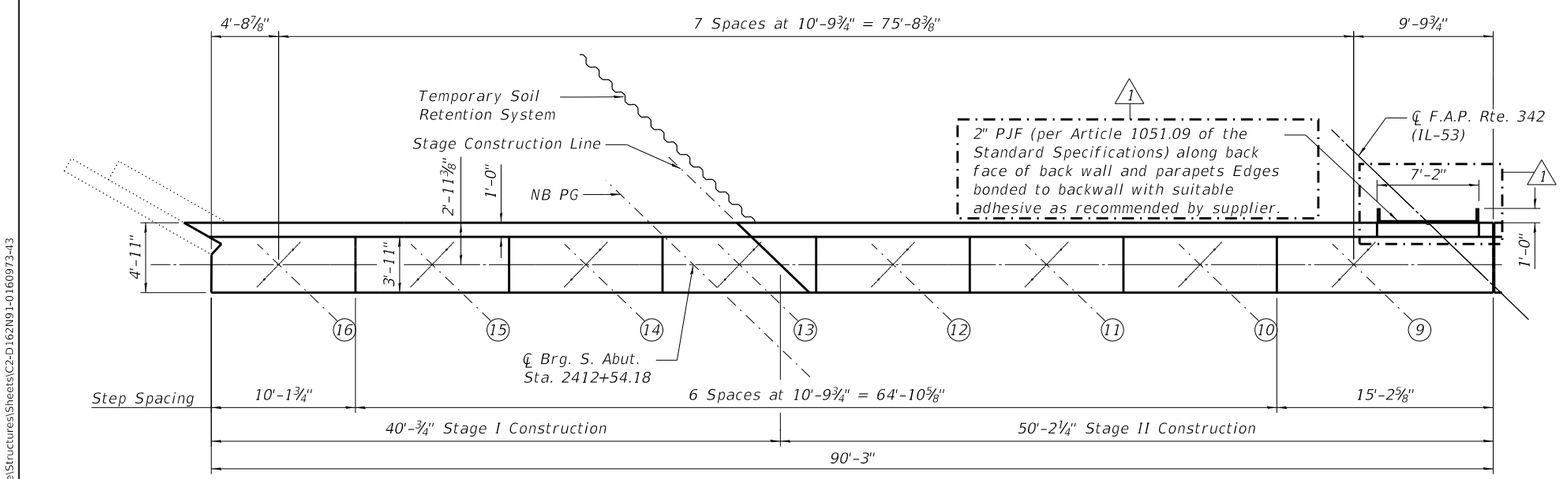

TOP OF SOUTH ABUTMENT

SOUTH ABUTMENT BILL OF MATERIAL

Structure No. 016-0973 (NB)

Bar	No.	Size	Length	Shape
h200(E)	5	#5	23'-1"	
h201(E)	5	#5	18'-9"	
h202(E)	5	#5	23'-9"	
h203(E)	5	#5	28'-10"	
1 h204(E)	8	#5	6'-10"	
p200(E)	5	#7	7'-6"	
p201(E)	30	#7	13'-6"	
p202(E)	5	#7	7'-0"	
p203(E)	5	#7	10'-5"	
p204(E)	5	#7	14'-11"	
s207(E)	90	#5	6'-11"	
s208(E)	3	#5	5'-9"	
s209(E)	15	#5	5'-11"	
s210(E)	10	#5	6'-1"	
s211(E)	64	#5	6'-3"	
1 v200(E)	8	#5	9'-1"	
Reinforcement Bars, Epoxy Coated		Pound	3,110	
Concrete Structures		Cu Yd	21.1	

Notes:

1. Cost of drilling and grouting reinforcing bars included in cost or Concrete Structures.
2. Bars shall be drilled and set according to Article 584 of the Standard Specifications. Bars shall have a 9" minimum embedment depth.
3. Bars indicated thus 2x3-#5 etc. indicates 2 lines of bars with 3 lengths per line.
4. All construction joints between new and existing concrete shall be Bonded Construction Joints.
5. Existing reinforcement extending into new construction shall be cleaned, straightened, and incorporated into the new construction. Cost included with Concrete Removal.
6. Existing reinforcement not extending into new construction shall be cut off flush and covered with a 2" layer of cement grout. Cost included with Concrete Removal.
7. The elevations shown above were calculated from the survey information provided by the district.
8. A cantilevered sheet piling design does not appear feasible and additional members or other retention systems may be necessary. The Contractor shall submit a Temporary Soil Retention System design including plan details and calculations for review and acceptance by the Engineer.

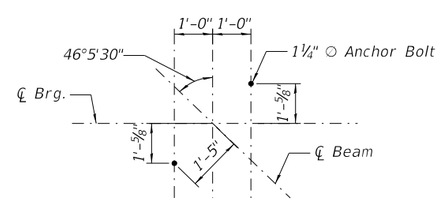

ANCHOR BOLT LOCATION PLAN DETAIL A

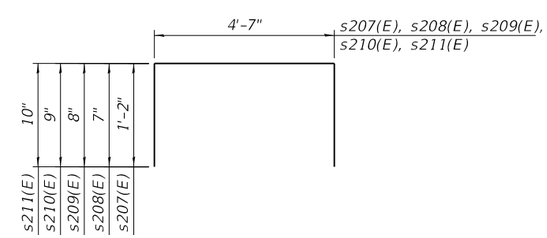

BARS s207(E) - s211(E)

USER NAME = USGM717780	DESIGNED - BJD	REVISED - 1 2/18/2025 MGH	STATE OF ILLINOIS DEPARTMENT OF TRANSPORTATION	SOUTH ABUTMENT MODIFICATIONS STRUCTURE NO. 016 - 0973 (NB)	F.A.S. RTE. 342 / SECTION 2018-100-BR / COUNTY COOK / TOTAL SHEETS 1290 / SHEET NO. 979
	CHECKED - MGH	REVISED -			CONTRACT NO. 62N91
PLOT SCALE = 0.1667 ' / in.	DRAWN - BJD	REVISED -		SHEET 43 OF 55 SHEETS	ILLINOIS FED. AID PROJECT
PLOT DATE = 2/17/2025	CHECKED - MGH	REVISED -			

MODEL: Default
FILE NAME: pw:\\wsp-us-pw.bentley.com:wsp-us-pw-IL\Documents\Project 62N91-IL 53 Bridges\Structures\Sheets\C2-D162N91-01160973-43

2/17/2025 3:25:53 PM

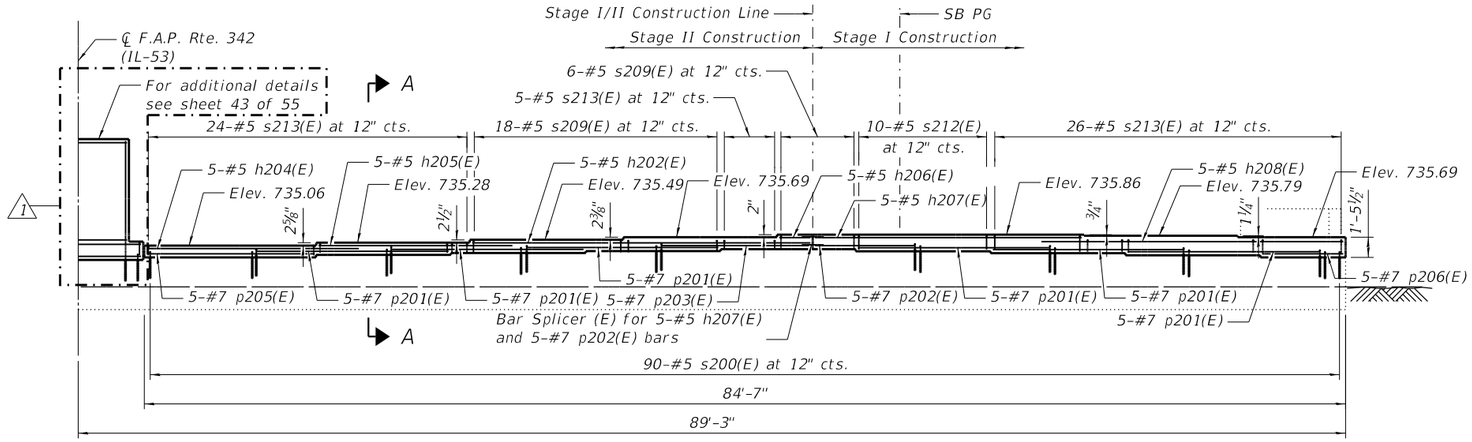

SOUTH ABUTMENT ELEVATION

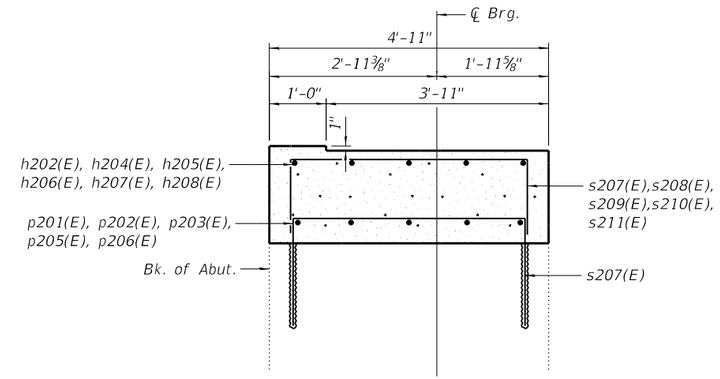

SECTION A-A

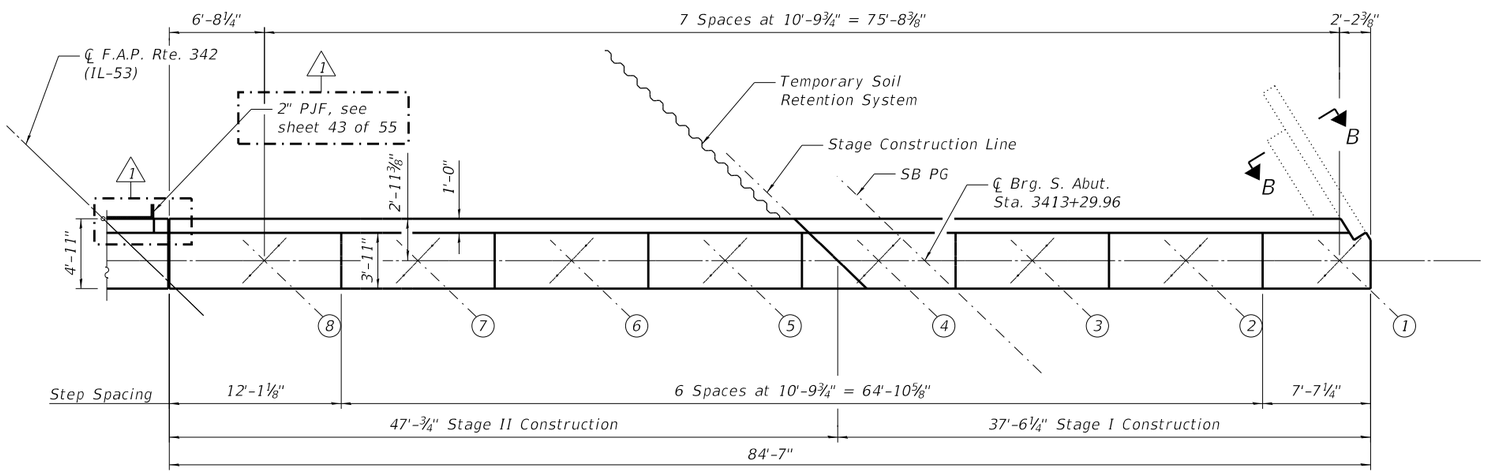

TOP OF SOUTH ABUTMENT

Notes:
1. See Sheet 43 of 55 for notes.

SOUTH ABUTMENT BILL OF MATERIAL

Structure No. 016-0371 (SB)

Bar	No.	Size	Length	Shape
h202(E)	5	#5	23'-9"	
h204(E)	5	#5	14'-11"	
h205(E)	5	#5	13'-8"	
h206(E)	5	#5	2'-2"	
h207(E)	5	#5	18'-9"	
h208(E)	5	#5	21'-3"	
p201(E)	30	#7	13'-6"	
p202(E)	5	#7	7'-0"	
p203(E)	5	#7	10'-5"	
p205(E)	5	#7	11'-9"	
p206(E)	5	#7	5'-8"	
s207(E)	90	#5	6'-11"	
s209(E)	16	#5	5'-11"	
s212(E)	18	#5	5'-5"	
s213(E)	55	#5	5'-7"	
Reinforcement Bars, Epoxy Coated			Pound	2,850
Concrete Structures			Cu Yd	16.3

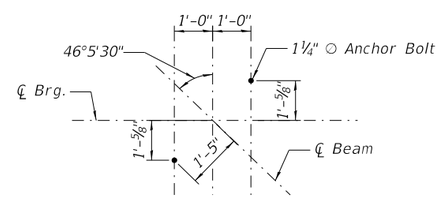

ANCHOR BOLT LOCATION PLAN
DETAIL A

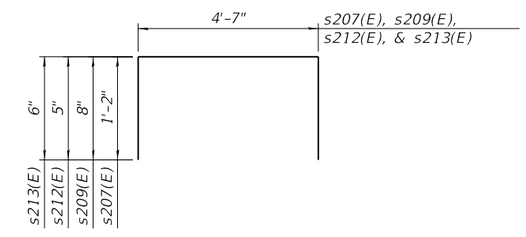

BARS s207(E), s209(E), s212(E) & s213(E)

MODEL: Default
FILE NAME: pw:\\wsp-us-pw.bentley.com:wsp-us-pw-ILIDocuments\Project 62N91-IL 53 Bridge\Structures\Sheets\C2-D162N91-0160973-45

USER NAME = USMH715955	DESIGNED - BJD	REVISED - 1 2/18/2025 MGH	STATE OF ILLINOIS DEPARTMENT OF TRANSPORTATION
	CHECKED - MGH	REVISED -	
PLOT SCALE = 0.1667 ' / in.	DRAWN - BJD	REVISED -	
PLOT DATE = 2/17/2025	CHECKED - MGH	REVISED -	

SOUTH ABUTMENT MODIFICATIONS
STRUCTURE NO. 016 - 0371 (SB)
SHEET 45 OF 55 SHEETS

F.A.S. RTE.	SECTION	COUNTY	TOTAL SHEETS	SHEET NO.
342	2018-100-BR	COOK	1290	981
		CONTRACT NO. 62N91		
		ILLINOIS FED. AID PROJECT		

2/17/2025 3:48:13 PM

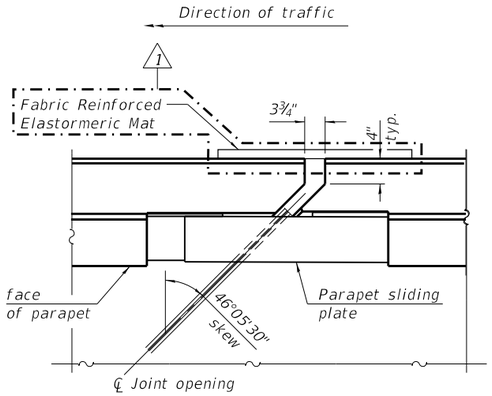

PLAN AT END OF APPROACH

(Drawn for SB IL-53 North approach sliding plate detail, other views similar.)

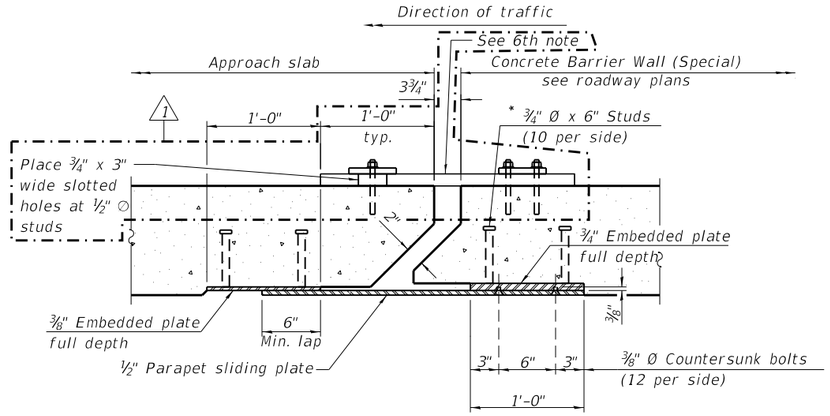

SECTION B-B

(Drawn for SB IL-53 North approach sliding plate detail, other views similar.)

Notes:
The preformed pavement joint seal shall be made continuous and shall have a minimum thickness of ¼". The configuration of the stripseal shall match the configuration of the locking edge rails. Open or "webbed" strip seal gland configurations are not permitted. The gland shall be sized for a maximum rated movement of 4 inches.
The manufacturer's recommended installation methods shall be followed.
All steel components shall be galvanized after fabrication according to Article 520.03 of the Standard Specifications.
Cost of parapet sliding plates, embedded plates, and anchorage studs included with Concrete Barrier Wall (Special)
39" constant slope barrier shown, 44" constant slope barrier similar as noted.
1 For the Northbound, Southwest approach parapet, and Southbound, Southeast approach parapet install Fabric Reinforced Elastormeric Mat according to Section 1028 of the Standard Specifications. Fabric mat shall be 28" wide and attached full height to the parapet with a ⅜" x 6" steel plate and ½" ∅ studs with nuts and washers at 12" cts. Cost included with Concrete Barrier Wall (Special).

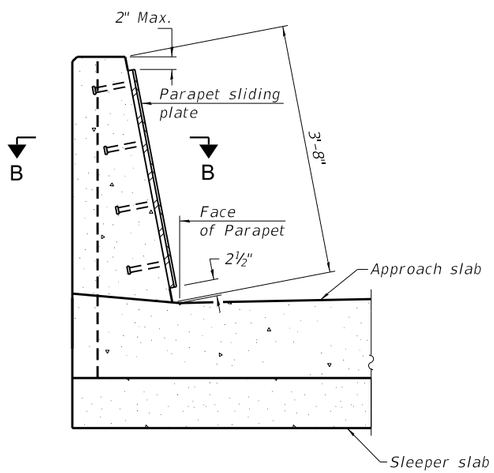

SECTION AT END OF APPROACH

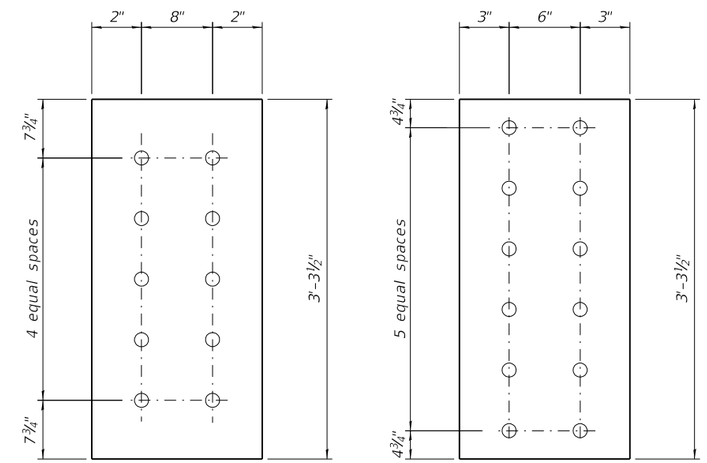

(Showing stud layout) (Showing hole layout)

EMBEDDED PLATE DETAIL

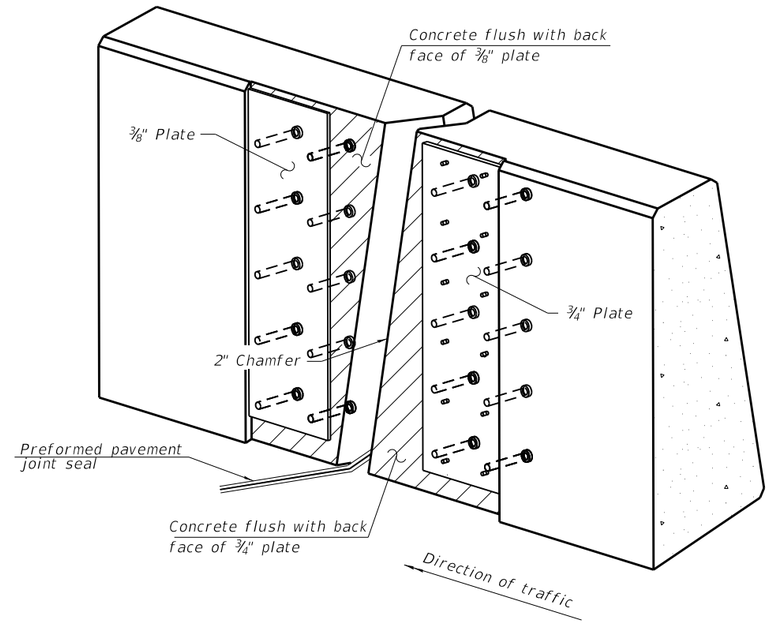

TRIMETRIC VIEW

(Showing embedded plates only)

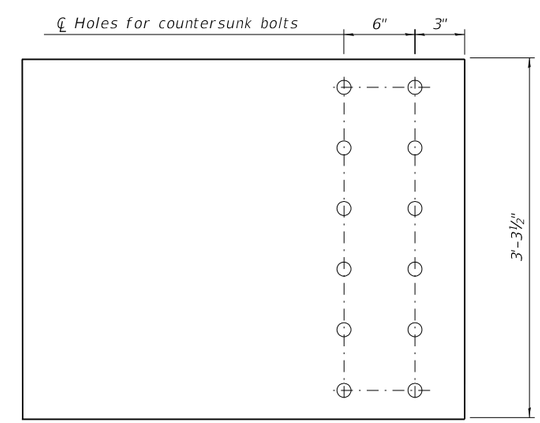

MEDIAN SLIDING PLATE

Notes:
1. See bridge approach sheets 21 to 23 of 55.

USER NAME = USMH715955	DESIGNED - BJD	REVISED - 1 2/18/2025 MGH	STATE OF ILLINOIS DEPARTMENT OF TRANSPORTATION	MEDIAN SLIDING PLATE STRUCTURE NO. 016 - 0371 (SB) & 016 - 0973 (NB)	F.A.P. RTE. 342 / SECTION 2018-100-BR / COUNTY COOK / TOTAL SHEETS 1351 / SHEET NO. 990A
	CHECKED - MGH	REVISED -			CONTRACT NO. 62N91
PLOT SCALE = 0:2.0000 ':" / in.	DRAWN - BJD	REVISED -		SHEET 54A OF 55 SHEETS	ILLINOIS FED. AID PROJECT
PLOT DATE = 2/17/2025	CHECKED - MGH	REVISED -			

MODEL: Default
FILE NAME: pw:\\wsp-us-pw.bentley.com:wsp-us-pw-IL\Documents\Project 62N91-IL 53 Bridge\Structures\Sheets\C2-D162N91-0160973-54A.dgn
2/17/2025 4:32:19 PM

Benchmark: TBM 21 – Cut cross on the southwest side of sign concrete foundation (IL 53 – IL 68 Dundee Road Exit), Elev. 729.131.

Existing Structure: None

Traffic Control: Shoulder closures are required along F.A.U. Rte. 334 US 12 (Rand Road) during wall construction. Drilling and setting of soldier piles will occur with concurrent superstructure replacement of Existing Bridge Structure Numbers 016-0973 and 0371 with work dependent on staged traffic control along IL-53 NB and SB for both Stages I and II of wall construction.

Salvage: None

DESIGN SPECIFICATIONS

2020 AASHTO LRFD Bridge Design Specifications, 9th Edition with Interims

DESIGN STRESSES

FIELD UNITS

f'c = 3,500 psi (Substructure)
fy = 60,000 psi (Reinforcement)
fy = 50,000 psi (M270 Grade 50)
Soldier Piles, Walers

DAVID D RICE
081-005258
LICENSED STRUCTURAL ENGINEER OF ILLINOIS

David D. Rice, S.E.
Licensed Structural Engineer
State of Illinois No. 081-005258
Registration Expires 11/30/2026

STA. 1009+19.43
BUILT 20XX BY
STATE OF ILLINOIS
F.A.P. RTE 342
SEC. 2018-100-BR
STR. NO. 016-W2503

NAME PLATE
(See Std. 515001)

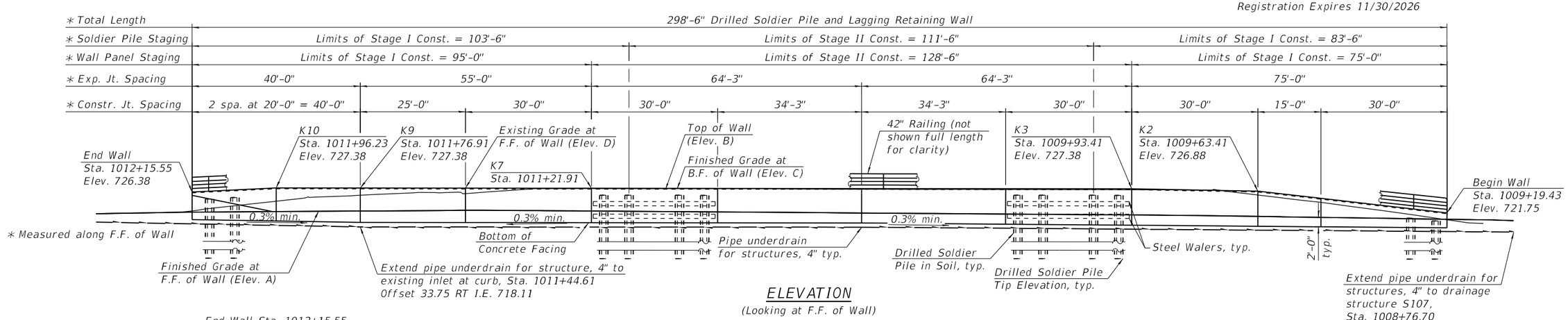

ELEVATION
(Looking at F.F. of Wall)

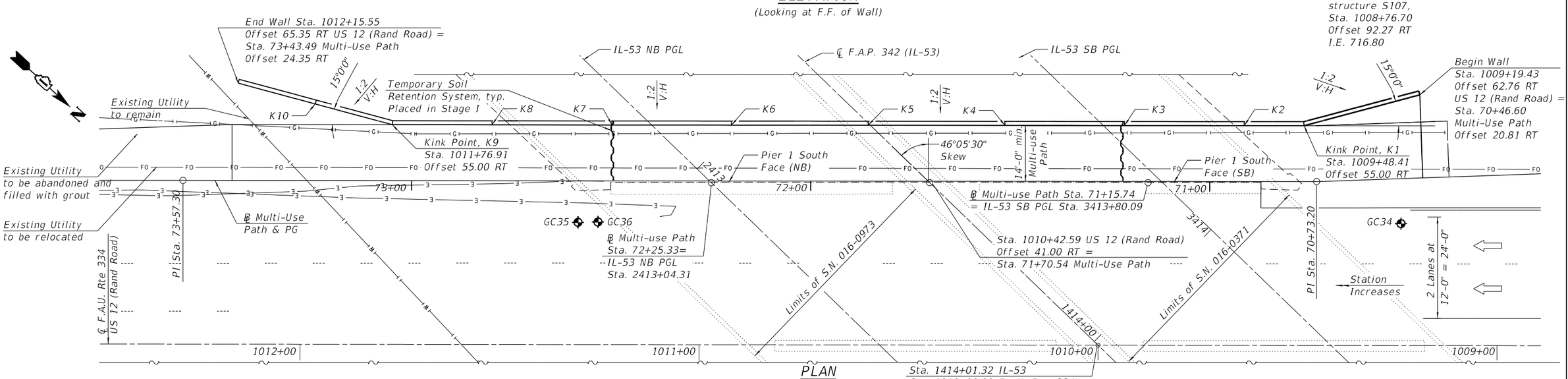

PLAN
(Soldier piles not shown full length for clarity)

APPROVED
For Structural Adequacy Only
Engineer of Bridges & Structures

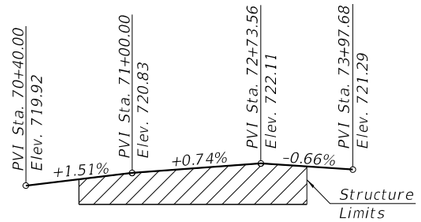

MULTI-USE PATH PROFILE GRADE
(Along ℄)

LEGEND

- Fiber Optic
- Gas Line
- Underground Water
- Pipe Underdrain for Structures, 4"
- Soil Boring

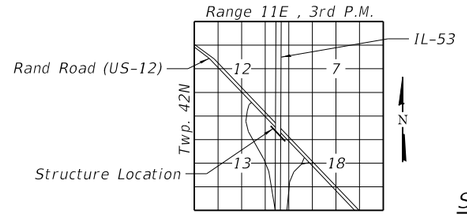

LOCATION SKETCH

GENERAL PLAN AND ELEVATION
RETAINING WALL ALONG
F.A.U. RTE. 334 US 12
UNDER F.A.P. 342 (IL-53)
SECTION 2018-100-BR
COOK COUNTY
STA. 1009+19.43 TO STA. 1012+15.55
STRUCTURE NO. 016-W2503

Notes:
1. Offsets are measured from US 12 (Rand Road) to the Front Face of Wall.
2. Concrete Gutter, Type "B" (Special) not shown for clarity.

F.F. = Front Face
B.F. = Back Face
I.E. = Invert Elevation

MODEL: Sheet 1
FILE NAME: S:\IOL\16300-6399\6346\113\Drawings\CAD\Micros-SS4\CAD_Sheets\016W2503-C2-001-GPE.dgn
2/10/2025 5:07:45 PM

STRAND ASSOCIATES®
1170 SOUTH HOUBOLT ROAD
JOLIET, ILLINOIS 60431
(815) 744-4200
IDFPR NO. 184-001273

USER NAME =	DESIGNED - BRL	REVISED -	
	CHECKED - DDR	REVISED -	
PLOT SCALE =	DRAWN - DMH	REVISED -	
PLOT DATE =	CHECKED - NDR	REVISED -	

STATE OF ILLINOIS
DEPARTMENT OF TRANSPORTATION

GENERAL PLAN AND ELEVATION
STRUCTURE NO. 016-W2503

SHEET 1 OF 15 SHEETS

F.A.P. RTE.	SECTION	COUNTY	TOTAL SHEETS	SHEET NO.
342	2018-100-BR	COOK	1351	992
		CONTRACT NO. 62N91		
	ILLINOIS	FED. AID PROJECT		