ROUTE NO.	SECTION	COUNTY	TOTAL SHEETS	SHEET NO.
FAP 749	9BR	EDGAR	31	14
FED. ROAD DIST. NO. 7		ILLINOIS	FED. AID PROJECT-	

SHEET NO. 7

9 SHEETS

Contract #70389

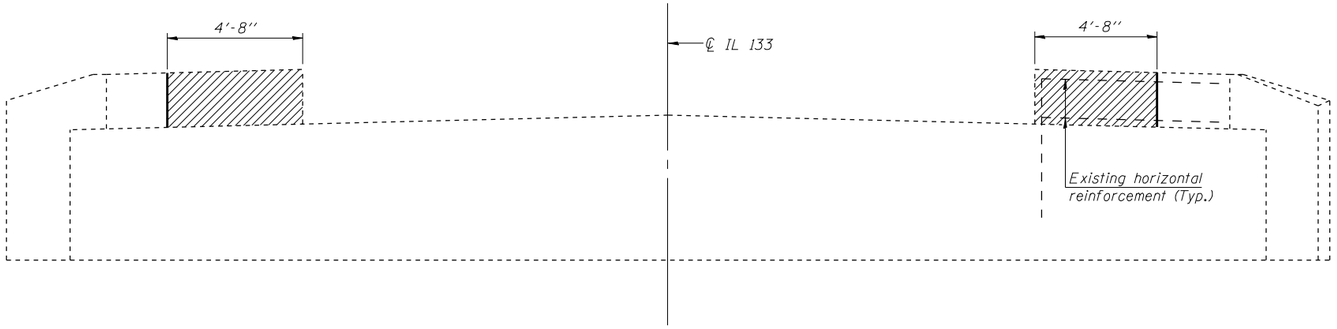

ELEVATION

(W. Abutment Looking West. E. Abutment Looking East)

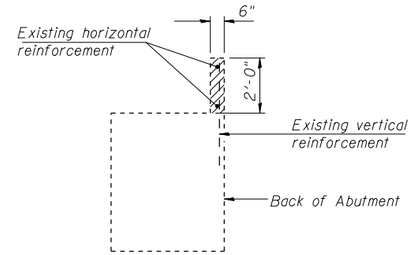

SECTION A-A

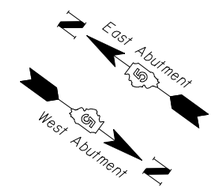

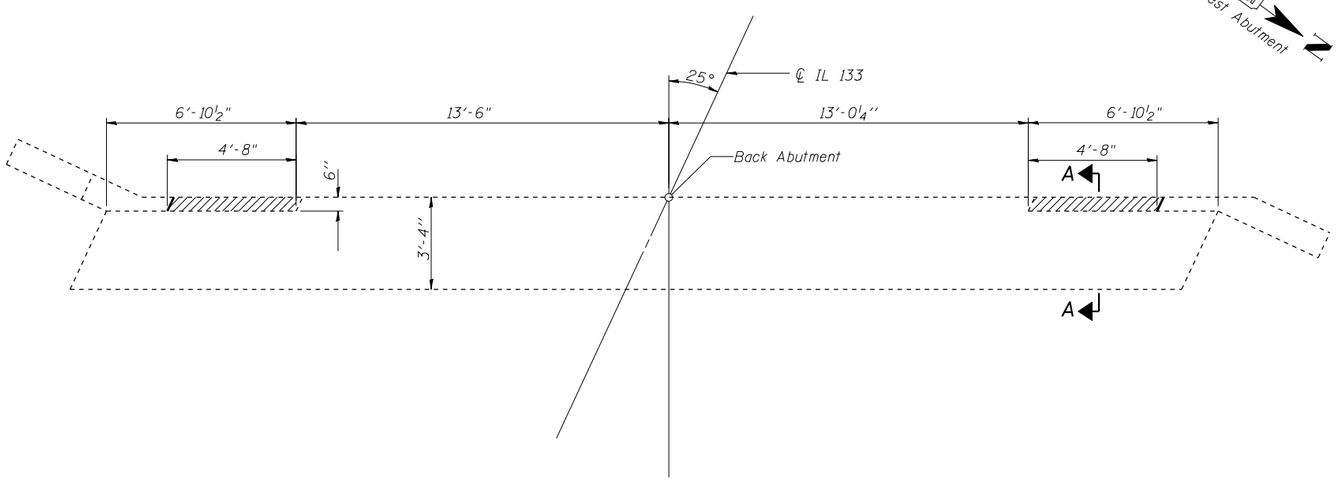

PLAN

Limits of concrete removal

TWO ABUTMENTS BILL OF MATERIAL

ITEM	UNIT	TOTAL
Concrete Removal	Cu. Yd.	0.7

NOTES

Existing vertical & horizontal reinforcement bars extending into the new construction shall be cleaned, straightened and incorporated into the new construction. Any reinforcement bars damaged during concrete removal shall be replaced with an approved bar splicer or anchorage system. Cost included with "Concrete Removal".

ILLINOIS DEPARTMENT OF TRANSPORTATION

SHEET TITLE

ABUTMENT CONCRETE REMOVAL DETAILS

PROJECT

IL 133 OVER HICKORY GROVE CREEK
FAP 749 SECTION 9BR
EDGAR COUNTY
STATION 159+99.25
STRUCTURE NUMBER 023-0015

PROJECT NO. 03061-11

SCALE

DATE 8/31/07

DRAWN BY TFG

CHECKED BY KPS/BD/MCB

DRAWING NO. 7 OF 9 SHTS

COOMBE-BLOXDORF P.C.
Engineers / Land Surveyors
Springfield, Illinois
Design Firm License No. 184-002703

PLOT DATE = 08/31/2007
FILE NAME = ...\023-0015-sht7-abut-details.dgn
PLOT SCALE = 5:5.824 ':' / IN.
USER NAME = CFC.