ROUTE NO.	SECTION	COUNTY	TOTAL SHEETS	SHEET NO.
FAP 749	9BR	EDGAR	31	12
FED. ROAD DIST. NO. 7	ILLINOIS	FED. AID PROJECT-		

SHEET NO. 5 9 SHEETS

Contract #70389

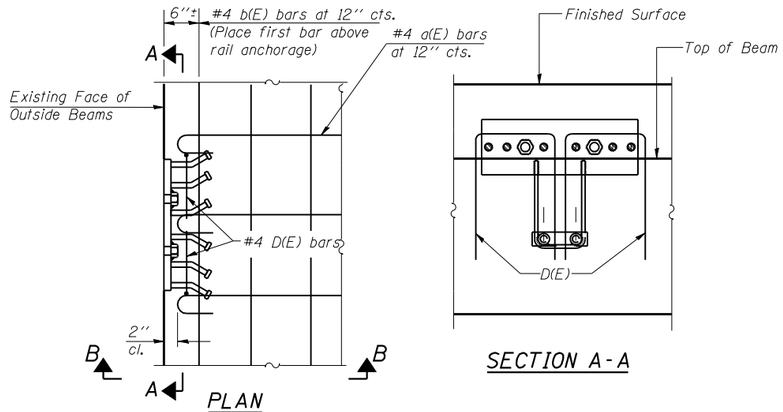

PLAN

SECTION A-A

RAILING ANCHOR DEVICE DETAIL

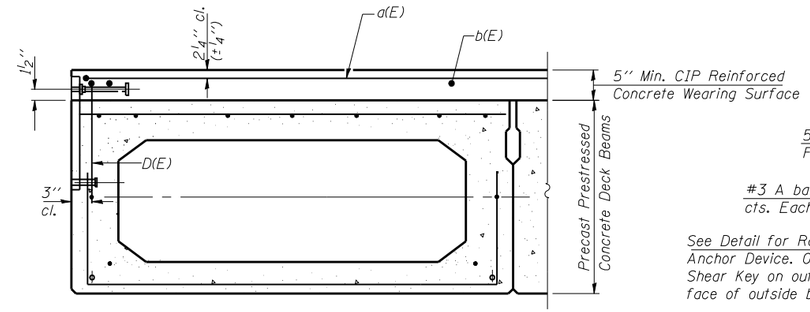

SECTION B-B

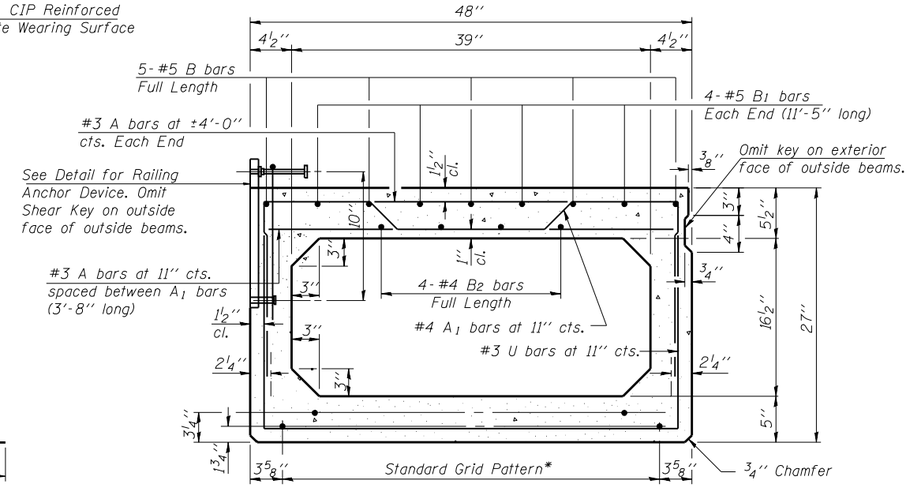

TYPICAL SECTION

18-1/2 '' ϕ Strands. Each Strand Stressed to 30,900 Lbs.
10-Strands 1¾'' up. 8-Strands 3¼'' up

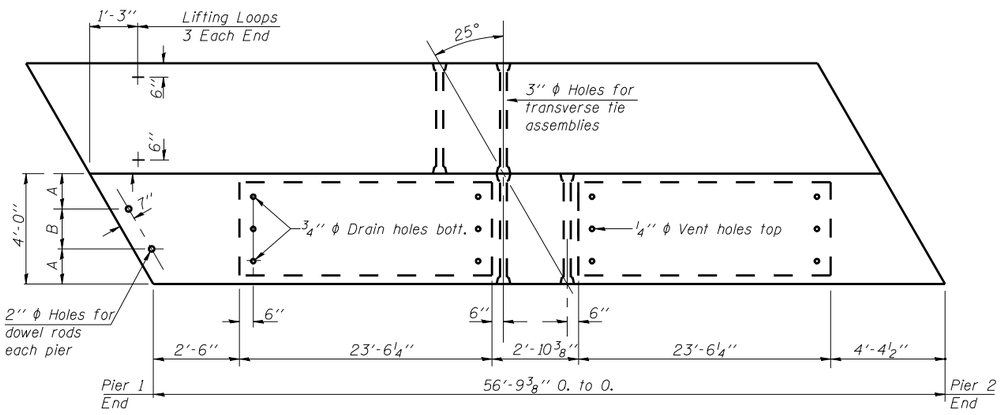

PLAN

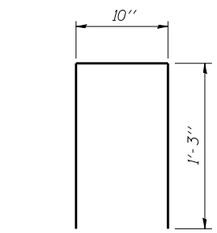

BAR D(E)

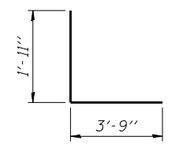

BAR D1

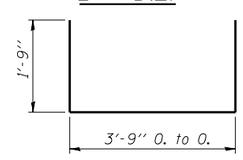

BARS U & U1

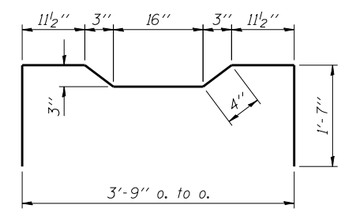

BAR A1

* TRANSVERSE STRAND PLACEMENT GUIDELINES

1) Place strands symmetrically about centerline of beam.
2) The minimum distance from center to center of strands in all directions shall be 2''.
3) The minimum clearance from strand to dowel hole shall be ½''.
4) The minimum clearance from strand to void shall be 1½''.

Vertical placement of strands shall not be adjusted to satisfy the above guidelines.

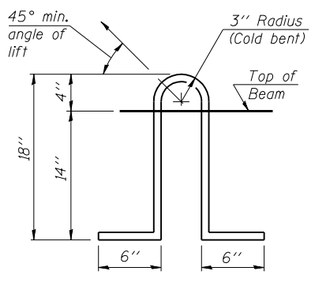

LIFTING LOOP DETAIL

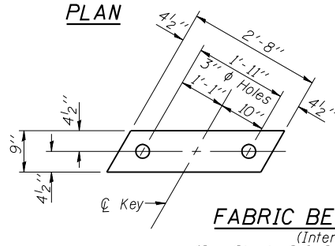

FABRIC BEARING PAD
(Interior)
(See Sheets 8 & 9 of 9 for locations)

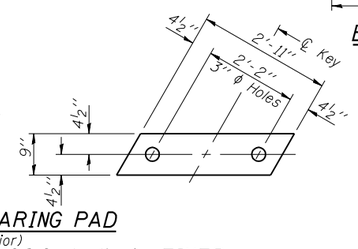

FIXED

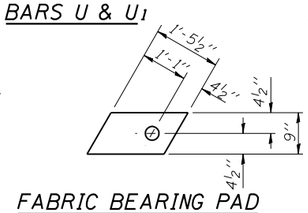

FABRIC BEARING PAD
(Exterior)

BEAM #	A	B
1	1'-1''	1'-10''
2	1'-1''	1'-10''
3	10''	2'-4''
4	1'-1''	1'-10''
5	1'-1''	1'-10''
6	10''	2'-4''
7	1'-1''	1'-10''
8	1'-1''	1'-10''

NOTES

Prestressing steel shall be uncoated high strength, low relaxation 7-wire strand, Grade 270.
The nominal diameter shall be ½'' and the nominal cross-sectional area shall be 0.153 sq. in.
Lifting loops shall be 3 - ½'' ϕ-270 ksi strands, as shown.
The 1'' ϕ rods in the transverse tie assembly shall be tightened to a snug fit and the threads set. Pockets that receive transverse tie bar on outside shall be filled with grout after transverse tie assembly is in place.
The bearing seat surfaces shall be adjusted by shimming to assure firm and even bearing. Two ⅛'' fabric adjusting shims of the dimensions of the Exterior Bearing Pad shall be provided for each bearing.
Keyway surfaces shall be cleaned to remove form oil or other bond breaking material prior to shipment of the beams. Cleaning shall be done by sandblasting the keyway areas between top of the beam and the bottom edge of the key.
Corrosion Inhibitor, per Articles 1020.05(b)(12) and 1021.06 of the Standard Specifications, shall be used in the concrete for precast prestressed concrete deck beams.
Required Release Strength, f'ci, shall be 4,000 p.s.i.
The Rail Anchorage shall be cast with the beam and the wearing surface shall be cast in the field. Formwork necessary for the wearing surface may be secured using the bottom rail anchorage inserts and/or additional inserts cast into the beam. Drilling into the beam will not be permitted.
See Sheet 2 of 9 for cross section and rail post spacing.
Non prestressing steel shall conform to the requirements of ASTM A 706 Gr 60 (IL Modified).
See Sheet 6 of 9 for rail details.

BILL OF MATERIAL

Precast Prestressed Conc. Deck Bms. (27'' depth)	Sq. Ft.	1817

Weight of beam = 46000 lbs.

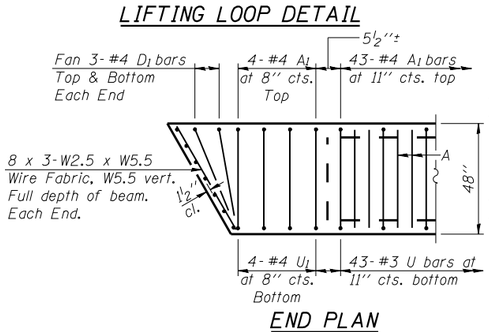

END PLAN

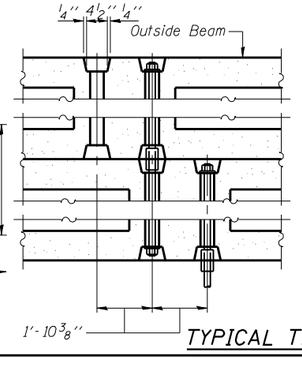

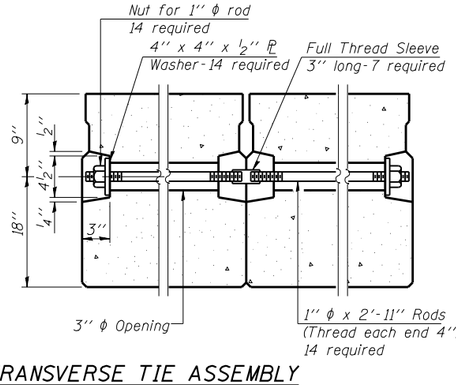

TYPICAL TRANSVERSE TIE ASSEMBLY

ILLINOIS DEPARTMENT OF TRANSPORTATION

SHEET TITLE: BEAM DETAILS SPAN 2

PROJECT: IL 133 OVER HICKORY GROVE CREEK
FAP 749 SECTION 9BR
EDGAR COUNTY
STATION 159+99.25
STRUCTURE NUMBER 023-0015

PROJECT NO. 03061-11
SCALE
DATE 8/31/07
DRAWN BY TFG
CHECKED BY KPS/BD/MCB
DRAWING NO. 5 OF 9 SHTS

COOMBE-BLOXDORF P.C.
Engineers / Land Surveyors
Springfield, Illinois
Design Firm License No. 184-002703

PLOT DATE = 08/31/2007
FILE NAME = ...8023-0015-sht5-BEAM-DETAILS-2.dgn
PLOT SCALE = 0.2,0588 ' / IN.
USER NAME = CFC.