F.A.P. RTE.	SECTION	COUNTY	TOTAL SHEETS	SHEET NO.
326	(123)BR-3	LIVINGSTON		130A
FED. ROAD DIST. NO.	ILLINOIS	FED. AID PROJECT		

CONTRACT NO. 66601

STATE OF ILLINOIS
DEPARTMENT OF TRANSPORTATION

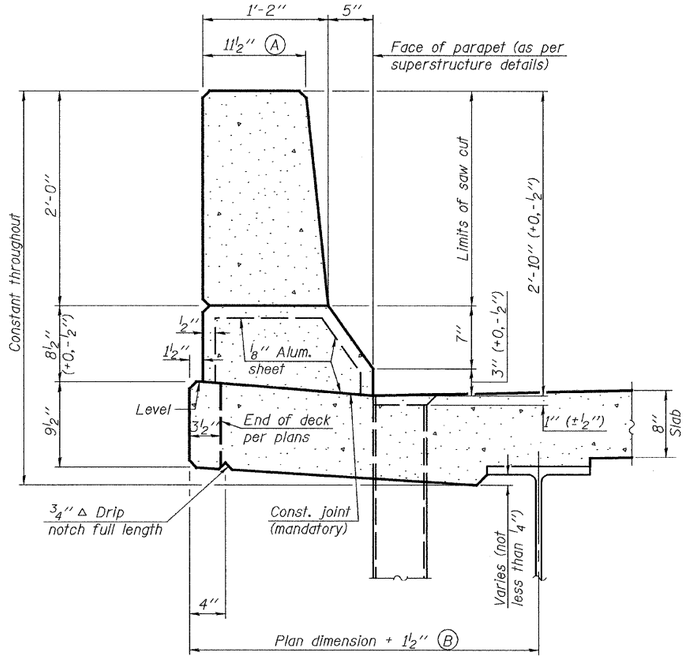

SECTION
(Showing dimensions)

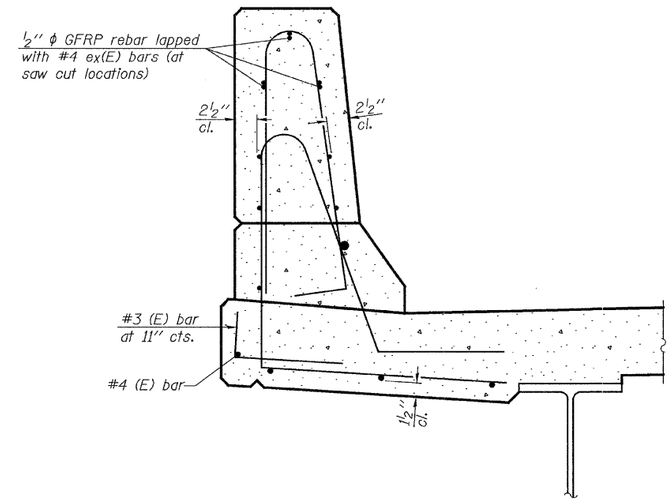

SECTION
(Showing reinforcement clearances for slip forming and additional reinforcement bars)

GENERAL NOTES

All dimensions shall remain the same as shown on contract plans, except dimensions A and B which are to be revised as shown to provide additional clearance. Additional concrete needed to revise dimension A and B= 0.0165 cu. yds./ft. of parapet.

Place aluminum sheet in curb portion at and near piers. Full thickness saw cut at all joint locations in lieu of cork joint filler.

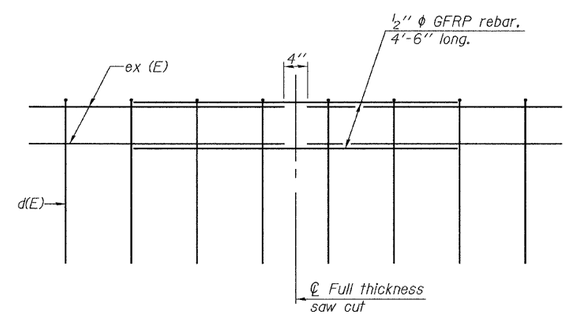

GFRP REBAR STIFFENING DETAIL
(Place as shown in parapet section at each parapet joint location.)

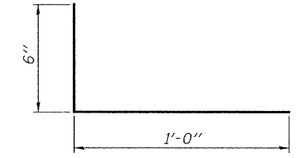

#3 (E) BAR

Johnson, Depp & Quisenberry
CONSULTING ENGINEERS
Springfield, Illinois

DESIGNED:	CDB	DRAWN:	P. Ray
CHECKED:	DCD	CHECKED:	CDB/DCD

SFP-34 9-3-07

CONCRETE PARAPET
SLIPFORMING OPTION
ILLINOIS 47 OVER
NORTH FORK VERMILION RIVER
FAP ROUTE 326 SECTION (123)BR-3
LIVINGSTON COUNTY
STATION 949+25.00
STRUCTURE NO. 053-0179

DATE: 01/30/2008 18:06:08 USER: DCD FILE: J:\JDO-Archive\10136 IL47 Livingston Ph2\I-VermilionRiver\08Aparapetslipforming.dgn