036

03-06-2020 LETTING ITEM 036

VAR. RTE.	SECTION	COUNTY	TOTAL SHEETS	SHEET NO.
VAR.	2019-155-BR	VARIOUS	107	1
	ILLINOIS	CONTRACT NO. 62K32		

STATE OF ILLINOIS

DEPARTMENT OF TRANSPORTATION

D-91-323-20

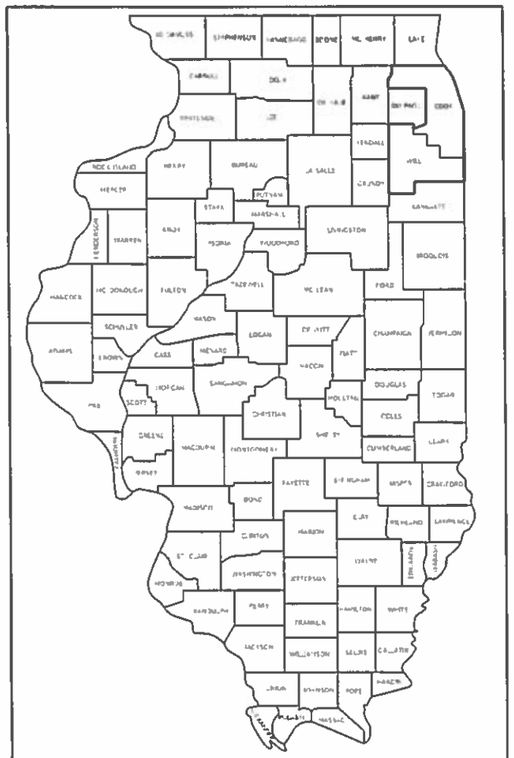

LOCATION OF SECTION INDICATED THUS:-

FOR INDEX OF SHEETS, SEE SHEET NO. 2

PROPOSED HIGHWAY PLANS

VARIOUS ROUTES
VARIOUS LOCATIONS – DISTRICT WIDE
SECTION: 2019–155–BR
PROJECT: STP–PFV3(281)
BRIDGE DECK SEALING
COOK & WILL COUNTIES

C–91–116–20

FOR LOCATION MAPS, SEE SHEET NO. 5 – 9

STATE OF ILLINOIS
DEPARTMENT OF TRANSPORTATION

SUBMITTED December 6, 20 19

Anthony J. Quigley (CAS)
REGIONAL ENGINEER

Jan 31, 20 20

ENGINEER OF DESIGN AND ENVIRONMENT

Jan 31, 20 20

DIRECTOR OF HIGHWAYS PROJECT IMPLEMENTATION

13

C.U.A.N.
CHICAGO UTILITY ALERT NETWORK
1–312–744–7000

J.U.L.I.E.
JOINT UTILITY LOCATION INFORMATION FOR EXCAVATORS
1–800–892–0123
OR 811

PROJECT ENGINEER: J. ALAIN MIDY (847) 221–3056
PROJECT MANAGER: FAWAD AQUEEL (847) 705–4247

CONTRACT NO. 62K32

PRINTED BY THE AUTHORITY OF THE STATE OF ILLINOIS

INDEX OF SHEETS

1	COVER
2	INDEX OF SHEETS, STATE STANDARDS, AND GENERAL NOTES
3	SUMMARY OF QUANTITIES
4	SCHEDULE OF QUANTITIES
5-9	LOCATION MAPS
10-101	EXISTING STRUCTURAL PLANS
102	TC-8 ENTRANCE AND EXIT RAMP CLOSURE DETAILS
103	TC-9 SINGLE LANE WEAVE AND MULTI-LANE WEAVE
104	TC-10 TRAFFIC CONTROL AND PROTECTION FOR SIDE ROADS, INTERSECTIONS, AND DRIVEWAYS
105	TC-14 TRAFFIC CONTROL AND PROTECTION AT TURN BAYS (TO REMAIN OPEN TO TRAFFIC)
106	TC-17 TRAFFIC CONTROL DETAILS FOR FREEWAY SHOULDER CLOSURES AND PARTIAL RAMP CLOSURES
107	TC-18 SIGNING FOR FLAGGING OPERATIONS AND WORK ZONE OPENINGS ON FREEWAYS/EXPRESSWAYS

STATE STANDARDS

701006-05	OFF-ROAD OPERATIONS, 2L, 2W, 15' (4.5 M) TO 24" (600 MM) FROM PAVEMENT EDGE
701101-05	OFF-ROAD OPERATIONS, MULTILANE, 15' (4.5 M) TO 24" (600 MM) FROM PAVEMENT EDGE
701106-02	OFF-ROAD OPERATIONS, MULTILANE, MORE THAN 15' (4.5 M) AWAY
701400-09	APPRAOCH TO LANE CLOSURE, FREEWAY/EXPRESSWAY
701401-12	LANE CLOSURE, FREEWAY/EXPRESSWAY
701411-09	LANE CLOSURE, MULTILANE, AT ENTRANCE OR EXIT RAMPS FOR SPEEDS >=45 MPH
701421-08	LANE CLOSURE, MULTILANE, DAY OPERATIONS ONLY, FOR SPEEDS >=45 MPH TO 55 MPH
701426-09	LANE CLOSURE, MULTILANE, INTERMITTENT OR MOVING OPERATION, FOR SPEEDS >=45 MPH (NOT ALLOWED ON EXPRESSWAY/EXPRESSWAYS RAMPS)
701427-05	LANE CLOSURE, MULTILANE, INTERMITTENT OR MOVING OPERATION, FOR SPEEDS =<40 MPH (NOT ALLOWED ON EXPRESSWAY/EXPRESSWAYS RAMPS)
701428-01	TRAFFIC CONTROL SETUP AND REMOVAL FREEWAY/EXPRESSWAY
701446-10	TWO LANE CLOSURE FREEWAY/EXPRESSWAY
701606-10	URBAN SINGLE LANE CLOSURE, MULTILANE, 2W WITH MOUNTABLE MEDIAN
701701-10	URBAN LANE CLOSURE, MULTILANE INTERSECTION
701801-06	SIDEWALK, CORNER OR CROSSWALK CLOSURE
701901-08	TRAFFIC CONTROL DEVICES

GENERAL NOTES

1. BEFORE STARTING ANY EXCAVATION, THE CONTRACTOR SHALL CALL "C.U.A.N." AT (312) 744-7000 FOR FIELD LOCATIONS OF BURIED ELECTRIC, TELEPHONE AND GAS UTILITIES. 48 HOUR NOTIFICATION IS REQUIRED.

2. BEFORE STARTING ANY EXCAVATION, THE CONTRACTOR SHALL CALL "J.U.L.I.E." AT (800) 892-0123 OR 811 FOR FIELD LOCATIONS OF BURIED ELECTRIC, TELEPHONE AND GAS UTILITIES. 48 HOUR NOTIFICATION IS REQUIRED.

3. THE CONTRACTOR SHALL COORDINATE CONSTRUCTION ACTIVITIES WITH UTILITY COMPANIES, AND THE VILLAGES OF CHICAGO RIDGE, WOODRIDGE AND THE CITY OF CHICAGO

4. THE CONTRACTOR WILL NOT BE ALLOWED TO SET UP A YARD OR FIELD OFFICE ON STATE PROPERTY WITHOUT WRITTEN PERMISSION FROM THE DEPARTMENT.

5. THE CONTRACTOR SHALL CONTACT THE DISTRICT ONE TRAFFIC CONTROL SUPERVISOR AT KALPANA.KANNAN-HOSADURGA@ILLINOIS.GOV A MINIMUM OF 72 HOURS IN ADVANCE OF BEGINNING WORK.

6. THE CONTRACTOR SHALL CONTACT THE DISTRICT ONE TRAFFIC CONTROL SUPERVISOR AT (847) 705-4151 FOR EXPRESSWAYS A MINIMUM OF 72 HOURS IN ADVANCE OF BEGINNING WORK.

7. THE CONTRACTOR SHALL REQUEST AND GAIN APPROVAL FROM THE ILLINOIS DEPARTMENT OF TRANSPORATION'S EXPRESSWAY TRAFFIC OPERATIONS ENGINEER AT WWW.IDOTLCS.COM AT LEAST 24 HOURS IN ADVANCE OF ALL DAILY LANE, RAMP AND SHOULDER CLOSURES AND 7 DAYS IN ADVANCE OF ALL PERMANENT AND WEEKEND CLOSURES ON ALL FREEWAYS AND/OR EXPRESSWAYS. THIS ADVANCE NOTIFICATION IS CALCULATED BASED ON WORKWEEK OF MONDAY THOUGH FRIDAY AND SHALL NOT INCLUDE WEEKENDS AND HOLIDAYS.

8. FREEWAY TO FREEWAY (SYSTEM INTERCHANGE) FULL RAMP CLOSURES FOR TWO LANE RAMPS WILL NOT BE PERMITTED. PARTIAL RAMP CLOSURES OF SYSTEM RAMPS MAY BE ALLOWED DURING THE 1-LANE CLOSURE HOURS IN THE KEEPING THE EXPRESSWAY OPEN TO TRAFFIC CONTRACT SPECIAL PROVISIONS. SYSTEM RAMP FULL CLOSURES FOR SINGLE LANE RAMPS ARE ONLY PERMITTED FOR A MAXIMUM OF FOUR (4) HOURS:

   - BETWEEN THE HOURS OF 1:00 A.M. AND 5:00 A.M. ON MONDAY THRU FRIDAY
   - BETWEEN THE HOURS OF 1:00 A.M. AND 6:00 A.M. ON SATURDAY, AND
   - BETWEEN THE HOURS OF 1:00 A.M. AND 7:00 A.M. ON SUNDAY.

   THE CONTRACTOR SHALL FURNISH AND INSTALL LARGE (48" X 48") "DETOUR WITH ARROW" SIGNS AS DIRECTED BY THE ENGINEER FOR ALL SYSTEM RAMP CLOSURES. IN ADDITION, ONE PORTABLE CHANGEABLE MESSAGE SIGN WILL BE REQUIRED TO BE PLACED IN ADVANCE OF THE RAMP CLOSURE. THE COST OF THESE SIGNS AND PCMS BOARD SHALL BE INCLUDED IN THE COST OF TRAFFIC CONTROL AND PROTECTION (6 STATIC SIGNS MAXIMUM PER CLOSURE).

8. THESE PLANS HAVE BEEN PREPARED FROM NOTES RECEIVED FROM THE BUREAU OF MAINTENANCE.

9. IT SHALL BE THE CONTRACTOR'S RESPONSIBILITY TO VERIFY ALL DIMENSIONS AND CONDITIONS EXISTING IN THE FIELD PRIOR TO CONSTRUCTION AND ORDERING OF MATERIALS.

10. DO NOT SCALE PLANS FOR CONSTRUCTION DIMENSIONS.

11. THE CONTRACTOR SHALL BE REQUIRED TO PROVIDE ACCESS TO ABUTTING PROPERTY AT ALL TIMES DURING THE CONSTRUCTION OF THIS PROJECT.

12. THE CONTRACTOR SHALL TAKE NECESSARY PRECAUTIONS TO INSURE THAT NO DEBRIS WILL ENDANGER OR INTERFERE WITH TRAFFIC ON THE ROADWAY BENEATH THE BRIDGE ACCORDING TO ARTICLE 107.09 OF THE STANDARD SPECIFICATIONS. THIS WORK WILL NOT BE PAID FOR SEPARATELY, BUT SHALL BE INCLUDED IN THE CONTRACT UNIT PRICE FOR THE APPROPRIATE PAY ITEM INVOLVED AND NO ADDITIONAL COMPENSATION WILL BE ALLOWED.

13. EXISTING PAVEMENT MARKINGS SHALL BE TEMPORARILY COVERED PRIOR TO APPLICATION OF THE DECK SURFACE TREATMENT, TO PREVENT THE MATERIAL FROM BEING APPLIED TO THE MARKINGS AND TO PROTECT THE REFLECTIVE PROPERTIES OF THE MARKINGS. THE TEMPORARY COVERING MATERIAL USED SHALL BE SUCH THAT IT WILL NOT AFFECT THE MARKING'S REFLECTIVITY WHEN REMOVED AFTER APPLICATION OF THE DECK SURFACE TREATMENT AND PRIOR TO OPENING TO TRAFFIC. COST INCLUDED WITH CONCRETE SEALER.

REV. - MS

SUMMARY OF QUANTITIES			URBAN TOTAL QUANTITIES	CONSTRUCTION TYPE CODE					
CODE NO	ITEM	UNIT		80% FED 20% STATE COOK 0047	80% FED 20% STATE WILL 0047				
67000400	ENGINEER'S FIELD OFFICE, TYPE A	CAL MO	6	5	1				
67100100	MOBILIZATION	L SUM	1	0.9	0.1				
70100310	TRAFFIC CONTROL AND PROTECTION,	L SUM	1	1					
	STANDARD 701421								
70102625	TRAFFIC CONTROL AND PROTECTION,	L SUM	1	1					
	STANDARD 701606								
70102635	TRAFFIC CONTROL AND PROTECTION,	L SUM	1	1					
	STANDARD 701701								
70102640	TRAFFIC CONTROL AND PROTECTION,	L SUM	1	1					
	STANDARD 701801								
70200100	NIGHTTIME WORK ZONE LIGHTING	L SUM	1	0.9	0.1				
X5870015	BRIDGE DECK CONCRETE SEALER	SQ FT	783902	661008	122894				
X7011015	TRAFFIC CONTROL AND PROTECTION	L SUM	1	0.9	0.1				
	(EXPRESSWAYS)								

SUMMARY OF QUANTITIES			URBAN TOTAL QUANTITIES	CONSTRUCTION TYPE CODE					
CODE NO	ITEM	UNIT		80% FED 20% STATE COOK 0047	80% FED 20% STATE WILL 0047				

FILE NAME = pw:\\planroomdot.illinois.gov:PWIDOT\Documents\IDOT Offices\District 1\Projects\DI32320\CADData\Design\DI32320-sht-Summary.dgn	USER NAME = dlazla	DESIGNED -	REVISED -
		DRAWN -	REVISED -
	PLOT SCALE = 100.0000 ' / in.	CHECKED -	REVISED -
	PLOT DATE = 12/9/2019	DATE -	REVISED -

STATE OF ILLINOIS
DEPARTMENT OF TRANSPORTATION

SUMMARY OF QUANTITIES

SCALE: | SHEET NO. 1 OF 1 SHEETS | STA. | TO STA.

VAR. RTE.	SECTION	COUNTY	TOTAL SHEETS	SHEET NO.
VAR.	2019-155-BR	VARIOUS	107	3
		CONTRACT NO. 62K32		

FED. ROAD DIST. NO. 1 | ILLINOIS | FED. AID PROJECT

LOCATION NO.	STRUCTURE NUMBER	COUNTY	BRIDGE DECK CONCRETE SEALER (S.F.)	TRAFFIC CONTROL AND PROTECTION, STANDARD					NIGHTTIME WORK ZONE LIGHTING
				701,421	701606	701701	701801	EXPRESSWAYS	
1	016-1056	COOK	51,747					X	X
2	016-1500	COOK	57,010					X	X
3	016-1501	COOK	57,010					X	X
4	016-1502	COOK	29,645					X	X
5	016-1503	COOK	69,080					X	X
6	016-1504	COOK	59,549					X	X
7	016-1505	COOK	70,756					X	X
8	016-2771	COOK	97,887	X	X	X	X		
9	016-2804	COOK	75,244					X	X
10	016-2805	COOK	93,081					X	X
11	099-3013	WILL	122,894					X	X

N

R14

T39

LOCATION OF PROJECT:
1. I-55 NB RAMP TO CERMAK ROAD
STRUCTURE NO. 016-1056
ADT = 8,200 (2018)
POSTED SPEED LIMIT = 30 MPH

LOCATION OF PROJECT:
2. I-55 NB TO US 41
(LAKE SHORE DRIVE)
STRUCTURE NO. 016-1500
ADT = 56,800 (2018)
POSTED SPEED LIMIT = 50 MPH

LOCATION OF PROJECT:
3. I-55 SB FROM US 41
(LAKE SHORE DRIVE)
STRUCTURE NO. 016-1501
ADT = 56,800 (2018)
POSTED SPEED LIMIT = 50 MPH

LOCATION OF PROJECT:
4. I-55 NB RAMP TO SB US 41
(LAKE SHORE DRIVE)
STRUCTURE NO. 016-1502
ADT = 15,100 (2018)
POSTED SPEED LIMIT = 50 MPH

LOCATION OF PROJECT:
5. I-55 NB RAMP TO NB US 41
(LAKE SHORE DRIVE)
STRUCTURE NO. 016-1503
ADT = 43,050 (2018)
POSTED SPEED LIMIT = 50 MPH

LOCATION OF PROJECT:
6. I-55 SB RAMP FROM SB US 41
(LAKE SHORE DRIVE)
STRUCTURE NO. 016-1504
ADT = 43,050 (2018)
POSTED SPEED LIMIT = 50 MPH

LOCATION OF PROJECT:
7. I-55 SB RAMP FROM NB US 41
(LAKE SHORE DRIVE)
STRUCTURE NO. 016-1505
ADT = 12,400 (2018)
POSTED SPEED LIMIT = 50 MPH

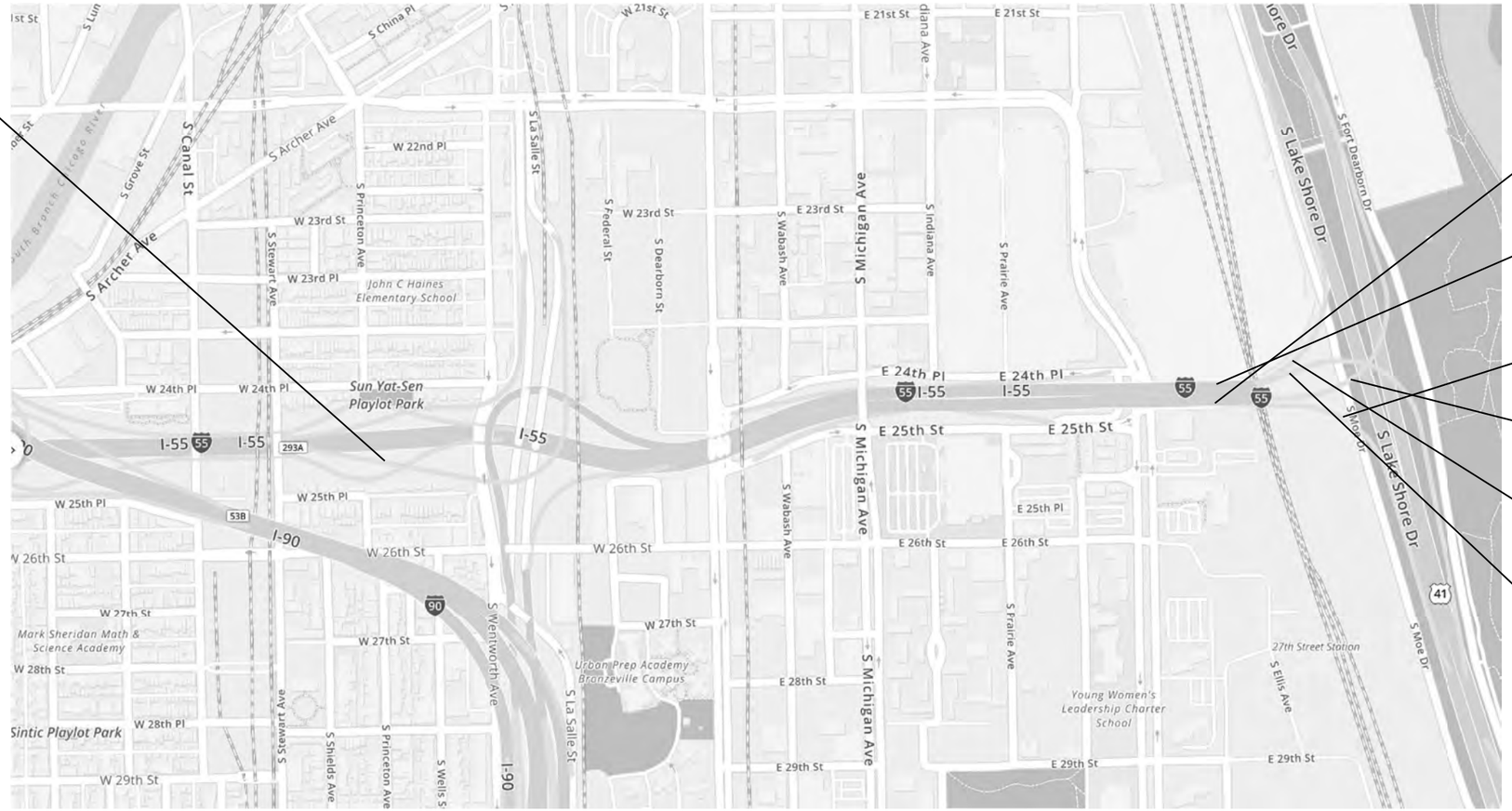

CHICAGO TOWNSHIP

MODEL: Default
FILE NAME: pw:\\dallanroom.dot.illinois.gov:PWIDOT\Documents\IDOT Offices\District 1\Projects\D132320\CADData\Design\D132320-sht-cover.dgn

USER NAME = diazia	DESIGNED -	REVISED -	
	DRAWN -	REVISED -	
PLOT SCALE = 100.0000 ' / in.	CHECKED -	REVISED -	
PLOT DATE = 12/11/2019	DATE -	REVISED -	

STATE OF ILLINOIS
DEPARTMENT OF TRANSPORTATION

LOCATION MAP

SCALE: | SHEET 1 OF 5 SHEETS | STA. TO STA.

VAR. RTE.	SECTION	COUNTY	TOTAL SHEETS	SHEET NO.
VAR.	2019-155-BR	VARIOUS	107	5
		CONTRACT NO. 62K32		
		ILLINOIS	FED. AID PROJECT	

R13

LOCATION OF PROJECT:
8. SOUTHWEST HIGHWAY
OVER CSXT RR AND STONY CREEK
STRUCTURE NO. 016-2771
ADT = 24,900 (2018)
POSTED SPEED LIMIT = 40 MPH

T37

WORTH TOWNSHIP

MODEL: Default
FILE NAME: pw:\\ulanroom.dot.illinois.gov:PWIDOT\Documents\IDOT Offices\District 1\Projects\D132320\CADData\Design\D132320-sht-cover.dgn

USER NAME = diazia	DESIGNED -	REVISED -	
	DRAWN -	REVISED -	
PLOT SCALE = 100.0000 ' / in.	CHECKED -	REVISED -	
PLOT DATE = 12/9/2019	DATE -	REVISED -	

STATE OF ILLINOIS
DEPARTMENT OF TRANSPORTATION

LOCATION MAP

SCALE: | SHEET 2 OF 5 SHEETS | STA. | TO STA.

VAR. RTE.	SECTION	COUNTY	TOTAL SHEETS	SHEET NO.
VAR.	2019-155-BR	VARIOUS	107	6
		CONTRACT NO. 62K32		
		ILLINOIS	FED. AID PROJECT	

R14

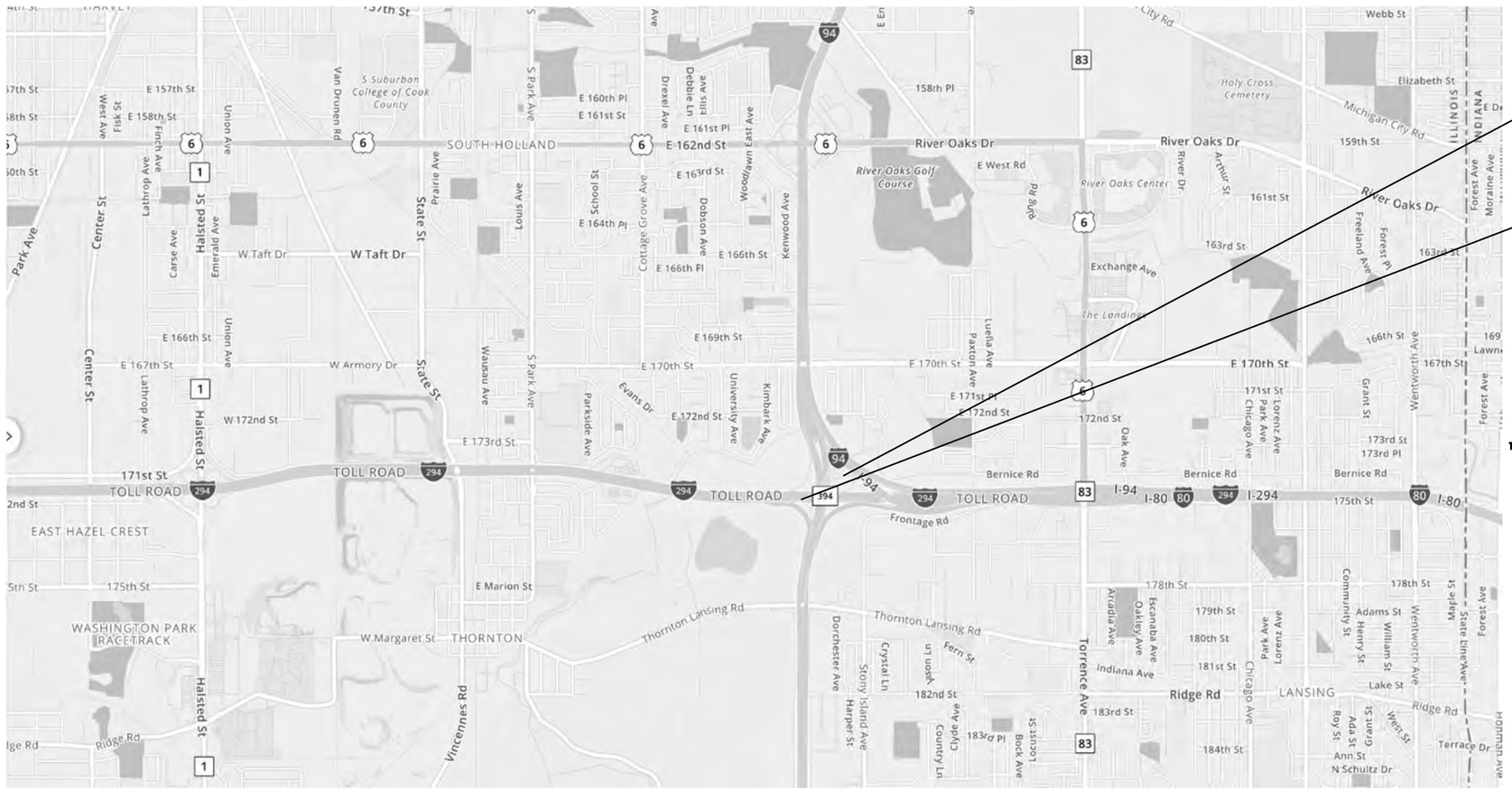

LOCATION OF PROJECT:
9. I-94 WB RAMP TO SB IL 394
STRUCTURE NO. 016-2804
ADT = 10,300 (2018)
POSTED SPEED LIMIT = 45 MPH

LOCATION OF PROJECT:
10. I-80/294 EB RAMP TO WB I-94
STRUCTURE NO. 016-2805
ADT = 9,300 (2018)
POSTED SPEED LIMIT = 45 MPH

THORNTON TOWNSHIP

MODEL: Default
FILE NAME: pw:\\planroom.dot.illinois.gov:PWIDOT\Documents\IDOT Offices\District 1\Projects\D132320\CADData\Design\D132320-sht-cover.dgn

USER NAME = diazia	DESIGNED -	REVISED -	
	DRAWN -	REVISED -	
PLOT SCALE = 100.0000 ' / in.	CHECKED -	REVISED -	
PLOT DATE = 12/9/2019	DATE -	REVISED -	

STATE OF ILLINOIS
DEPARTMENT OF TRANSPORTATION

LOCATION MAP

SCALE: | SHEET 3 OF 5 SHEETS | STA. | TO STA.

VAR. RTE.	SECTION	COUNTY	TOTAL SHEETS	SHEET NO.
VAR.	2019-155-BR	VARIOUS	107	7
		CONTRACT NO. 62K32		
		ILLINOIS	FED. AID PROJECT	

R10 | R11

LOCATION OF PROJECT:
11. I-55 SB TO SB I-355
STRUCTURE NO. 099-3013
ADT = 5,800 (2018)
POSTED SPEED LIMIT = 45 MPH

T37

DuPAGE AND DOWNERS GROVE TOWNSHIP

MODEL: Default
FILE NAME: pw:\\dbarroom.dot.illinois.gov:PWIDOT\Documents\IDOT Offices\District 1\Projects\D132320\CADData\Design\D132320-sht-cover.dgn

USER NAME = cfiazia	DESIGNED -	REVISED -	STATE OF ILLINOIS DEPARTMENT OF TRANSPORTATION	LOCATION MAP	VAR. RTE.	SECTION	COUNTY	TOTAL SHEETS	SHEET NO.
	DRAWN -	REVISED -			VAR.	2019-155-BR	VARIOUS	107	8
PLOT SCALE = 100.0000 ' / in.	CHECKED -	REVISED -					CONTRACT NO. 62K32		
PLOT DATE = 12/9/2019	DATE -	REVISED -		SCALE: SHEET 4 OF 5 SHEETS STA. TO STA.			ILLINOIS FED. AID PROJECT		

FOR INFORMATION ONLY

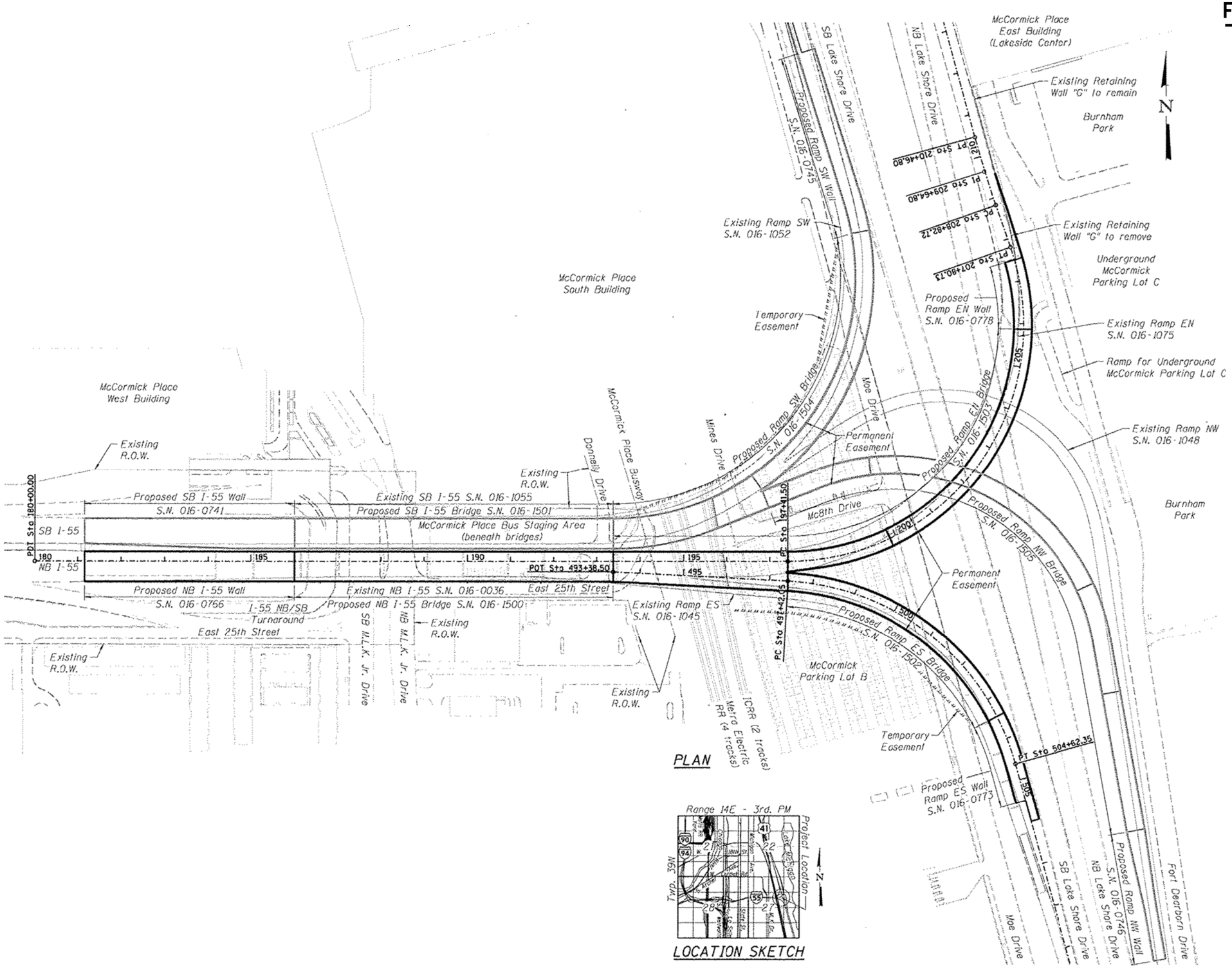

PLAN

LOCATION SKETCH

USER NAME = diazia	DESIGNED -	REVISED -
	DRAWN -	REVISED -
PLOT SCALE = 100.0000 ' / in.	CHECKED -	REVISED -
PLOT DATE = 12/6/2019	DATE -	REVISED -

STATE OF ILLINOIS
DEPARTMENT OF TRANSPORTATION

LOCATION MAP
I-55 & US 41 INTERCHANGE

SCALE: | SHEET 5 OF 5 SHEETS | STA. | TO STA.

VAR. RTE.	SECTION	COUNTY	TOTAL SHEETS	SHEET NO.
VAR.	2019-155-BR	VARIOUS	107	9

CONTRACT NO. 62K32

ILLINOIS | FED. AID PROJECT

MODEL: Default
FILE NAME: pw:\\ulanroom.dot.illinois.gov:PWIDOT\Documents\IDOT Offices\District 1\Projects\D132320\CADData\Design\D132320-ebridge.dgn

FOR INFORMATION ONLY

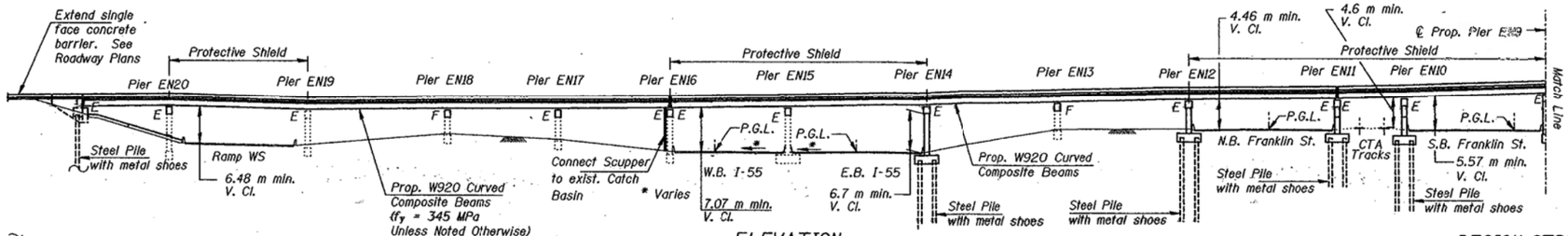

ELEVATION

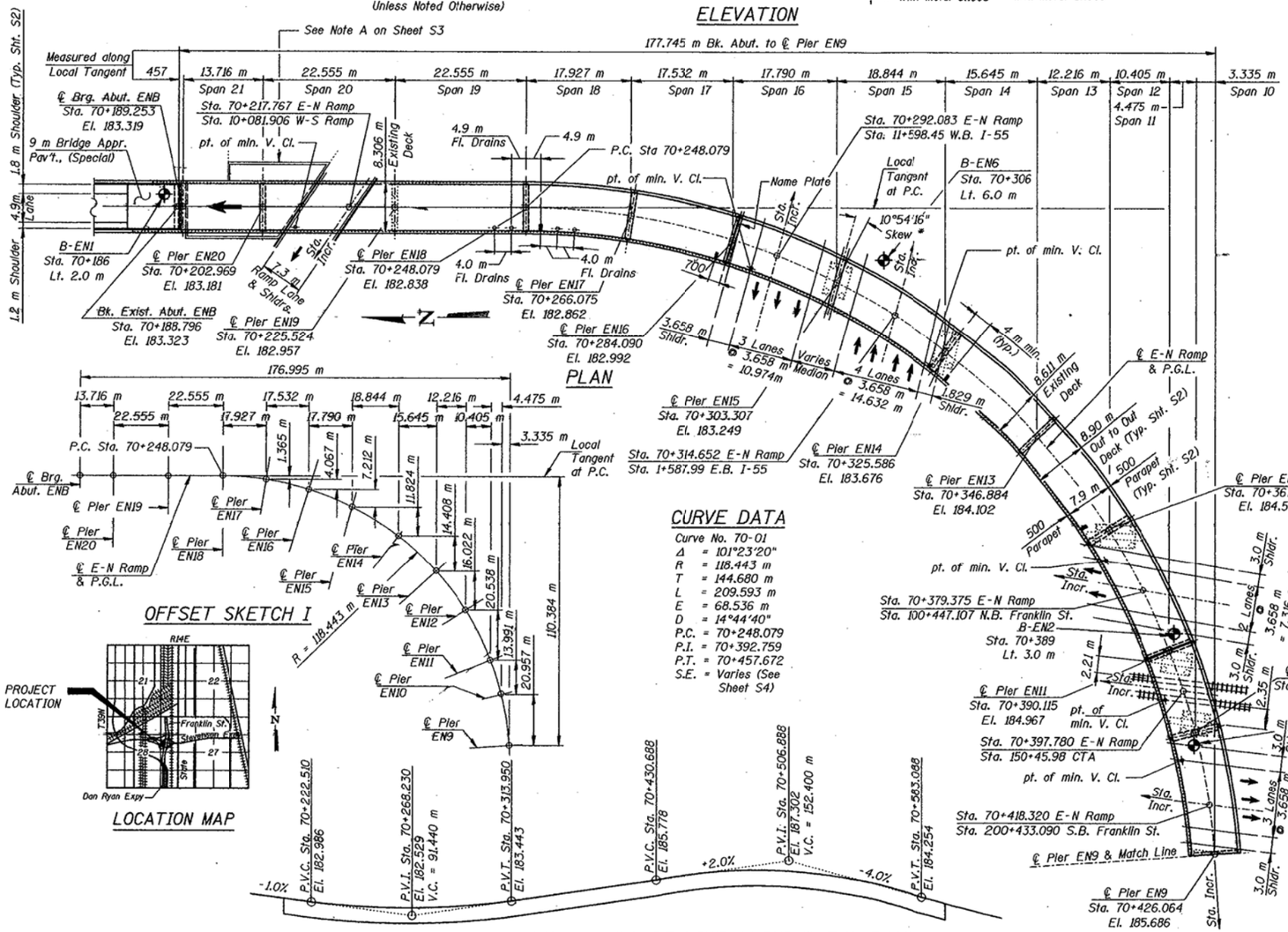

PLAN

OFFSET SKETCH I

LOCATION MAP

CURVE DATA

Curve No. 70-01
Δ = 101°23'20"
R = 118.443 m
T = 144.680 m
L = 209.593 m
E = 68.536 m
D = 14°44'40"
P.C. = 70+248.079
P.I. = 70+392.759
P.T. = 70+457.672
S.E. = Varies (See Sheet S4)

PROFILE GRADE LINE ALONG ℄ E.N. RAMP

* All other existing piers are either radial or have been radially realigned.

DESIGN SPECIFICATIONS

1996 AASHTO, 1997, 1998 & 1999 Interims.

1993 Guide Specification for Horizontally Curved Highway Bridges

1995 Seismic Retrofitting Manual for Highway Bridges (FHWA-RD-94-052)

LOADING MS18

Allow 2.4 kN/m² for future wearing surface

SEISMIC DATA

S.P.C. = A
A = 0.04g
S = 1.0

DESIGN STRESSES

NEW CONSTR.

f'_c = 24 MPa
f_y = 400 MPa (Reinf.)
f_y = 345 MPa (Structural Steel M270 M Grade 345)
f_y = 250 MPa (Structural Steel M270 M Grade 250)

EXISTING CONSTR.

f'_c = 24 MPa
f_y = 275 MPa (Reinf.)
f_y = 250 MPa (Structural Steel A.S.T.M. A36)

EXISTING STRUCTURE DESCRIPTION:

The existing structure (S.N. 016-1056) was built as F.A.I. Route 55, Section SW-1717.6-2P in 1964. The structure consists of 21 spans which include 2 cast-in-place concrete beam end spans and 19 steel beam spans consisting of eleven 1-span, one 2-span, and one 6 span units supported on twenty piers and two abutments. Span lengths, measured between ℄ of substructure elements from east to west along the centerline are; 13.716 m, 24.613 m, 29.261 m, 29.261 m, 29.261 m, 29.261 m, 24.613 m, 22.957 m, 14.965 m, 22.863 m, 10.901 m, 24.124 m, 21.284 m, 21.284 m, 22.284 m, 19.221 m, 18.013 m, 18.013 m, 22.555 m, 22.555 m, and 13.716 m giving a total length of 454.719 m. The structure is built on a horizontal curve and piers are at various skews. The twenty piers and both abutments are supported on caissons. The ramp will be completely closed during construction. No salvage of bridge components.

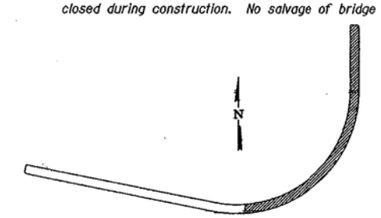

KEY PLAN

MODEL: Default
FILE NAME: pw:\\planroom.dot.illinois.gov:PWIDOT\Documents\IDOT Offices\District 1\Projects\D132320\CADData\Design\D132320-ergnal.dgn

USER NAME = diazia	DESIGNED -	REVISED -	
	DRAWN -	REVISED -	
PLOT SCALE = 100.0000 ' / in.	CHECKED -	REVISED -	
PLOT DATE = 12/9/2019	DATE -	REVISED -	

STATE OF ILLINOIS
DEPARTMENT OF TRANSPORTATION

EXISTING GENERAL PLAN
SN: 016-1056

SCALE: | SHEET OF SHEETS | STA. | TO STA.

VAR. RTE.	SECTION	COUNTY	TOTAL SHEETS	SHEET NO.
VAR.	2019-155-BR	VARIOUS	107	10

CONTRACT NO. 62K32

ILLINOIS | FED. AID PROJECT

FOR INFORMATION ONLY

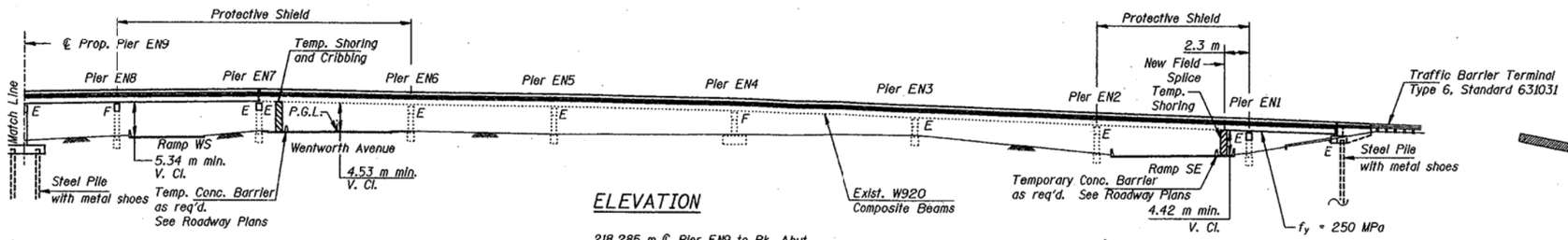

ELEVATION

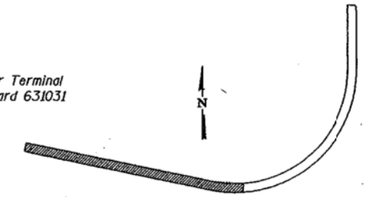

KEY PLAN

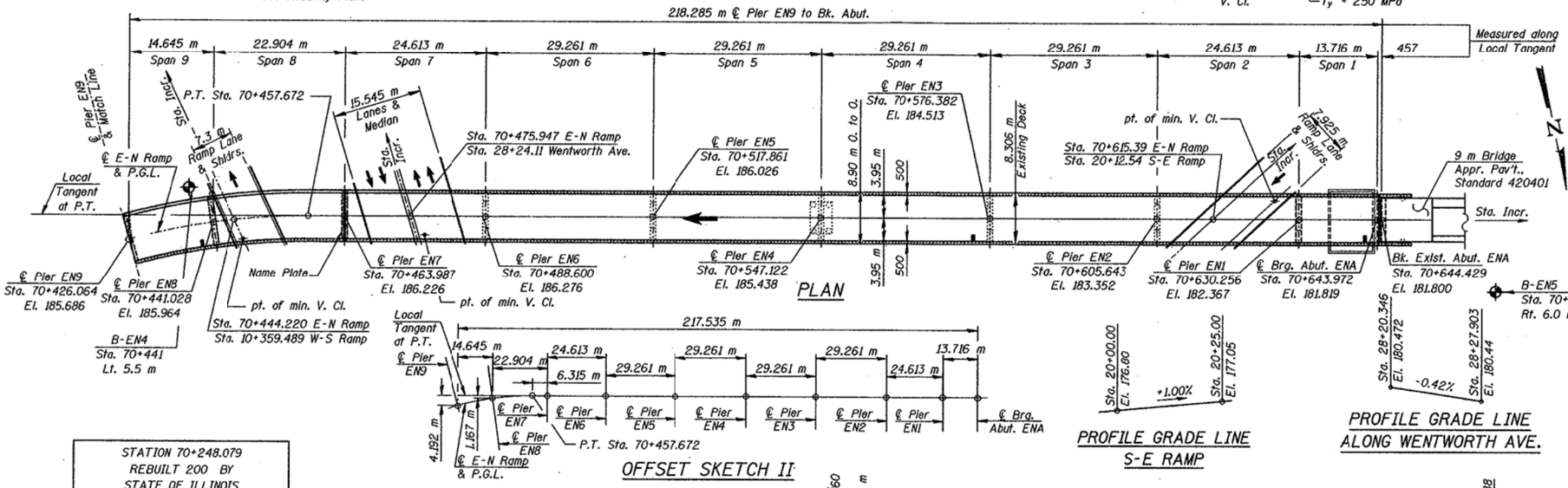

PLAN

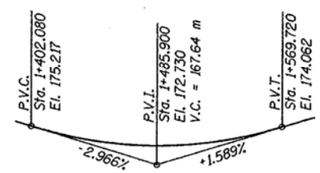

PROFILE GRADE LINE ALONG ℄ E.B. F.A.I. 55

OFFSET SKETCH II

PROFILE GRADE LINE S-E RAMP

PROFILE GRADE LINE ALONG WENTWORTH AVE.

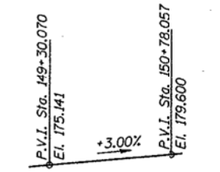

EXIST. CTA TRACKS BASE OF RAIL PROFILE

Rail height = 168 mm

STATION 70+248.079
REBUILT 200 BY
STATE OF ILLINOIS
F.A.I. RT. 55 SEC. 1717.6-2P (R,R-1,R-2,R-3,R-4)
F.A. PROJ. ACBHF-ACIM-557 (259) 278
LOADING MS18
STR. NO. 016-1056

NAME PLATE

See Std. 515001

The new Name Plates shall be attached to the pier next to the existing Name Plate according to Section 515 of the Std. Specs except that the Name Plates shall be surface mounted using vandal-proof screws.

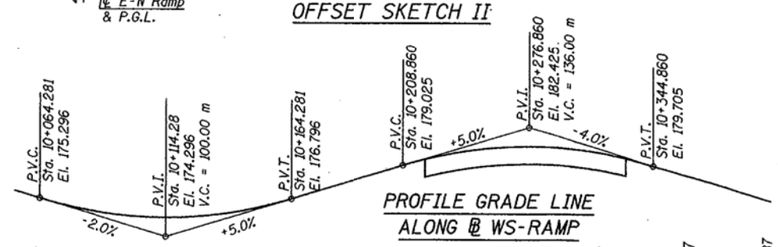

PROFILE GRADE LINE ALONG ℄ WS-RAMP

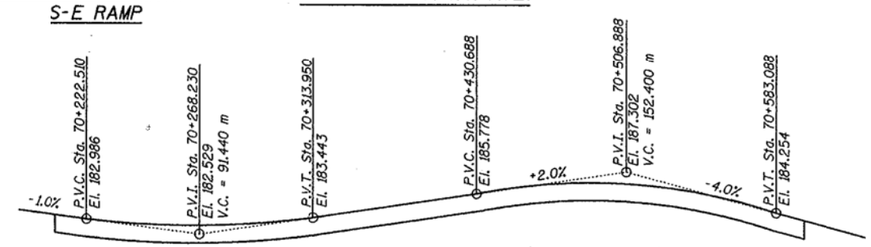

PROFILE GRADE LINE ALONG ℄ E.N. RAMP

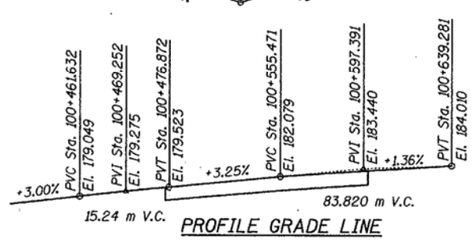

PROFILE GRADE LINE ALONG ℄ N.B. FRANKLIN STREET

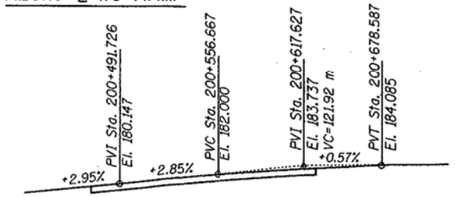

PROFILE GRADE LINE ALONG ℄ S.B. FRANKLIN STREET

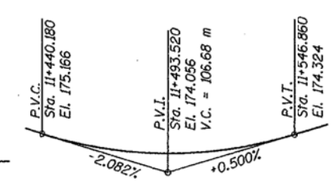

PROFILE GRADE LINE ALONG ℄ W.B. F.A.I. 55

MODEL: Default
FILE NAME: pw:\\ildmoom.dot.illinois.gov:PWIDOT\Documents\IDOT Offices\District 1\Projects\D132320\CADData\Design\D132320-ex-sal-dgn

USER NAME = diazia	DESIGNED -	REVISED -	
	DRAWN -	REVISED -	
PLOT SCALE = 100.0000 ' / in.	CHECKED -	REVISED -	
PLOT DATE = 12/6/2019	DATE -	REVISED -	

STATE OF ILLINOIS
DEPARTMENT OF TRANSPORTATION

EXISTING GENERAL PLAN
SN: 016-1056

SCALE: | SHEET OF SHEETS | STA. TO STA.

VAR. RTE.	SECTION	COUNTY	TOTAL SHEETS	SHEET NO.
VAR.	2019-155-BR	VARIOUS	107	11
		CONTRACT NO. 62K32		
		ILLINOIS FED. AID PROJECT		

FOR INFORMATION ONLY

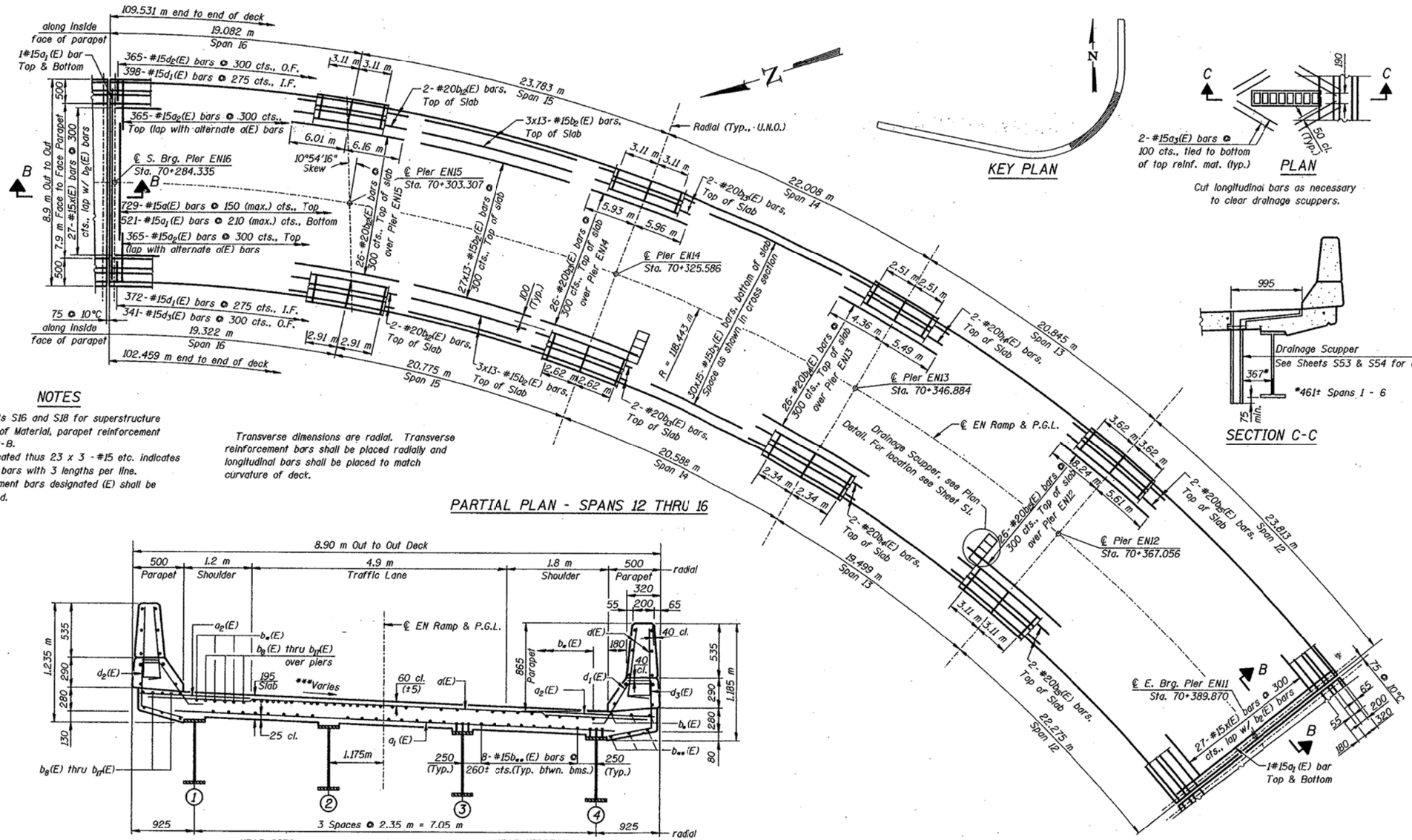

NOTES

See Sheets S16 and S18 for superstructure details, Bill of Material, parapet reinforcement & Section B-B.

Bars indicated thus 23 x 3 - #15 etc. indicates 23 lines of bars with 3 lengths per line.

Reinforcement bars designated (E) shall be Epoxy Coated.

Transverse dimensions are radial. Transverse reinforcement bars shall be placed radially and longitudinal bars shall be placed to match curvature of deck.

PARTIAL PLAN - SPANS 12 THRU 16

CROSS SECTION

(Looking Upstation)

$b_*(E) = b(E), b_2(E)$, or $b_4(E)$

$b_{**}(E) = b_1(E), b_3(E)$, or $b_5(E)$

MODEL: Default
FILE NAME: pw:\\ildanroom.dot.illinois.gov:PWIDOT\Documents\IDOT Offices\District 1\Projects\D132320\CADData\Design\D132320-ereplr.dgn

USER NAME = diazia	DESIGNED -	REVISED -	
	DRAWN -	REVISED -	
PLOT SCALE = 100.0000 ' / in.	CHECKED -	REVISED -	
PLOT DATE = 12/6/2019	DATE -	REVISED -	

STATE OF ILLINOIS
DEPARTMENT OF TRANSPORTATION

EXISTING DECK & CROSS SECTION PLAN
SN: 016-1056

SCALE: | SHEET OF SHEETS | STA. TO STA.

VAR. RTE.	SECTION	COUNTY	TOTAL SHEETS	SHEET NO.
VAR.	2019-155-BR	VARIOUS	107	12
		CONTRACT NO. 62K32		
	ILLINOIS	FED. AID PROJECT		

FOR INFORMATION ONLY

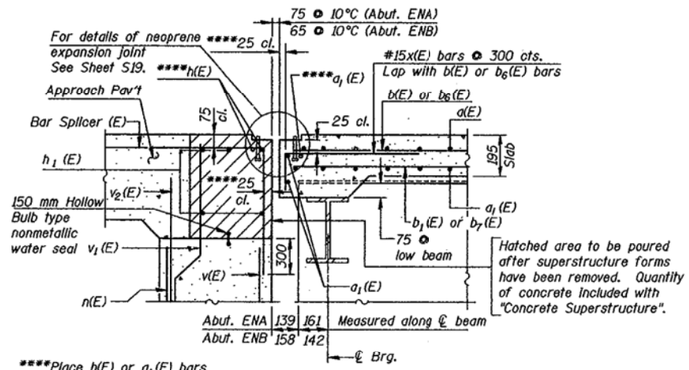

****Place h(E) or a_1(E) bars in back of anchor bolt as shown if required to maintain 25 mm cl. (+0-3 mm). Anchor bolts should be tied to h(E) or a_1(E).

SECTION A-A

(Abutment ENA & ENB)
h(E), n(E), and v(E) bars billed with abutment

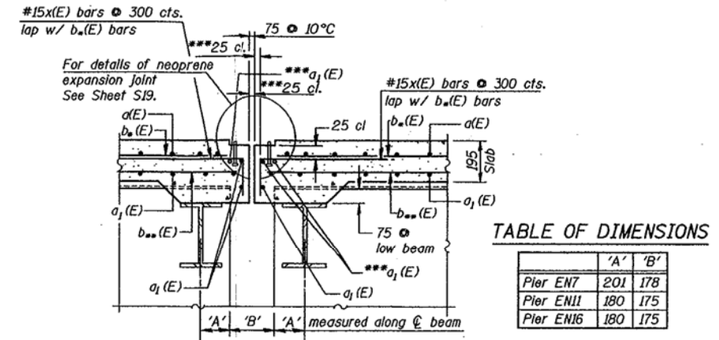

SECTION B-B

(Pier EN7, EN11 & EN16)

***Place a_1(E) bars in back of anchor bolt as shown if required to maintain 25 mm cl. (+0-3 mm). Anchor bolts should be tied to a_1(E).

b_*(E)= b(E), b_2(E), b_4(E), or b_6(E)
b_{**}(E)= b_1(E), b_3(E), b_5(E), or b_7(E)

TABLE OF DIMENSIONS

	'A'	'B'
Pier EN7	201	178
Pier EN11	180	175
Pier EN16	180	175

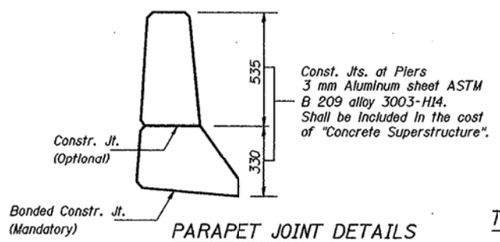

PARAPET JOINT DETAILS

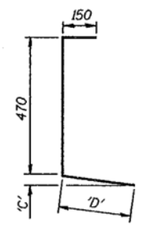

BARS d_2(E) THRU d_6(E)

TABLE OF DIMENSIONS

	'C'	'D'
d_2(E)	130	630
d_3(E)	80	620
d_4(E)	80	520
d_5(E)	130	530
d_6(E)	80	820

Cut to fit d_5(E) & d_6(E) bars in field

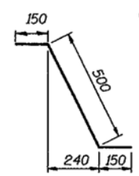

BAR d_1(E)

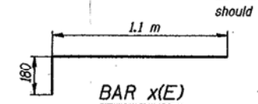

BAR x(E)

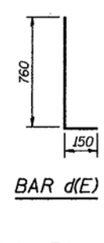

TOP PLAN

(Showing Aluminum Tube)

BAR d(E)

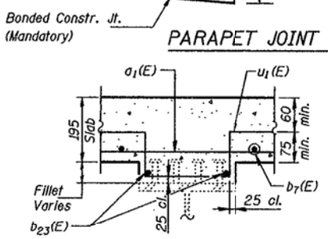

HAUNCH REINFORCEMENT

Note: Bars b_{23}(E) and u_1(E), spaced @ 300 cts., shall be placed in the regions of spans 2-7 where the existing studs do not project a min. of 50 mm into the slab. The numbers of u_1(E) bars required for each beam are as follows:

Span 2 = 62
Span 3 - 6 = 58
Span 7 = 69

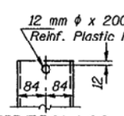

FIBERGLASS PIPE

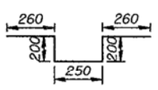

BAR u_1(E)

***** Dimension as required by Pipe Clamp

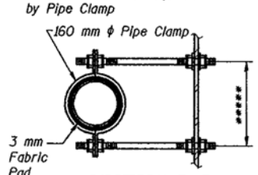

SECTION B-B

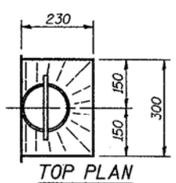

TOP PLAN

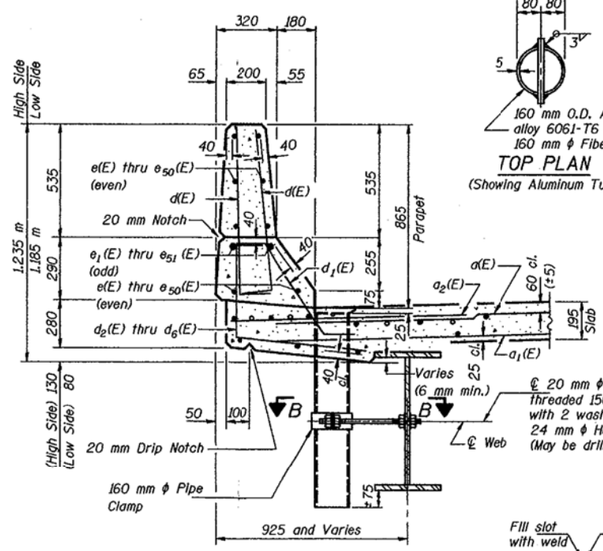

SECTION THRU PARAPET

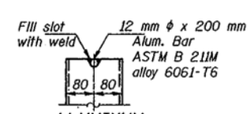

ALUMINUM TUBE

Notes:

The exterior surfaces of the floor drains shall be painted with the finish coat as specified in the special provisions for Cleaning and Painting New Metal Structures. The exterior surfaces of the drains shall be cleaned according to Steel Structures Painting Council's Spec. SSPC-SP1 prior to painting.

Fiberglass pipe shall conform to ASTM D 2996, with short-time rupture strength hoop tensile stress of 200 MPa minimum.

MODEL: Default
FILE NAME: pw:\\planroom.dot.illinois.gov:PWIDOT\Documents\IDOT Offices\District 1\Projects\D132320\CADData\Design\D132320-ereplr.dgn

USER NAME = diazia	DESIGNED -	REVISED -	
	DRAWN -	REVISED -	
PLOT SCALE = 100.0000 ' / in.	CHECKED -	REVISED -	
PLOT DATE = 12/6/2019	DATE -	REVISED -	

STATE OF ILLINOIS
DEPARTMENT OF TRANSPORTATION

EXISTING DECK & CROSS SECTION PLAN
SN: 016-1056

SCALE: SHEET OF SHEETS STA. TO STA.

VAR. RTE.	SECTION	COUNTY	TOTAL SHEETS	SHEET NO.
VAR.	2019-155-BR	VARIOUS	107	13
		CONTRACT NO. 62K32		
		ILLINOIS FED. AID PROJECT		

FOR INFORMATION ONLY

Bench Mark: BM-4, chiseled square on NE corner of crashwall at existing Pier E20, just East of Moe Drive, on existing S.N. 016-1075 carrying NB I-55 to NB L.S.D., Elev. 594.65 (NAVD 88).

Existing Structure: (no salvaging) S.N. 016-0036 was built in 1965 & carries NB I-55 traffic over I-55 NB/SB Turnaround, Martin Luther King Jr. Drive, McCormick Place Bus Staging Area, & Donnelly Drive. The 1229'-9" long structure has a 299'-9" west terminal structure (Unit 1), with 10-spans of 88'-110'-88' (Unit 2), 2x102' (Unit 3), 83'-104'-83' (Unit 4), & 2x85' (Unit 5). The original out-to-out deck width varied from 59'-7" (Spans 1-8) to 75'-11" at the east. Units 1-2 were widened for a fourth tapered lane in 1994. The structure uses 50" steel plate girders, a 7.5" concrete deck, 3-4 column concrete piers, & concrete caissons drilled into rock. It was rehabilitated in 1975 (deck repair, exp. joint replacement, & steel repainting), 1990 (bearing replacement), 1994 (deck repair, exp. joint replacement, & pier repair), 2002 (steel repainting), 2005 (pier repair), and 2008 (deck repair).

Traffic Control: For Stage Ia, maintain 2-lanes of EB traffic on north half of existing S.N. 016-0036 during construction of south half of Spans 1E-3E of proposed S.N. 016-1500, south half of Spans 9E-10E of proposed S.N. 016-1503 (Unit 2), Spans 11E-14E of proposed S.N. 016-1503 (Unit 3), north & east halves of Spans 15E-18E of proposed S.N. 016-1502, & gore widening of existing S.N. 016-1075. For Stage Ib, continue prior EB traffic for construction of south half of Spans 4E-5E of proposed S.N. 016-1500 & temporary bridge from proposed S.N. 016-1500 to existing S.N. 016-1045. For Stage II, continue prior EB traffic & add lane on proposed S.N. 016-1500 for construction of center 1/3 of Spans 6E-8E of proposed S.N. 016-1503 (Unit 1). For Stage III, continue prior EB traffic for construction of south 1/3 of Spans 6E-8E of proposed S.N. 016-1503 (Unit 1) & south & west halves of Spans 15E-18E of proposed S.N. 016-1502. For Stage IV, shift 3-lanes of EB traffic to south half of proposed S.N. 016-1500 for construction of north half of Spans 1E-5E of proposed S.N. 016-1500, north 1/3 of Spans 6E-8E of proposed S.N. 016-1503 (Unit 1), & north half of Spans 9E-10E of proposed S.N. 016-1503 (Unit 2). Temporary lane closures may be required for the I-55 NB/SB Turnaround, Martin Luther King Jr. Drive, McCormick Place Bus Staging Area, Donnelly Drive, & East 25th Street.

DS-11 SCUPPER TABLE

ID	Station	Offset
1	186+07.00	22'-0" (Lt.)
2	186+07.00	46'-0" (Rt.)
3	186+12.00	22'-0" (Lt.)
4	186+12.00	46'-0" (Rt.)
5	187+17.00	22'-0" (Lt.)
6	187+17.00	46'-0" (Rt.)
7	189+07.00	22'-0" (Lt.)
8	189+07.00	46'-0" (Rt.)
9	190+67.00	22'-0" (Lt.)
10	190+67.00	46'-0" (Rt.)
11	192+17.00	22'-0" (Lt.)
12	192+17.00	46'-0" (Rt.)

LIGHT PEDESTAL TABLE

ID	Station	Offset
AK2	186+50.00	47'-7" (Rt.)
AL1	188+30.00	47'-7" (Rt.)
AK1	189+90.00	47'-7" (Rt.)
AG1	191+70.00	47'-7" (Rt.)

Aluminum light poles have a 10"Φ (15"Φ bolt circle), possess height of 45', support 6'-8' mast arms, & are mounted on the parapets.

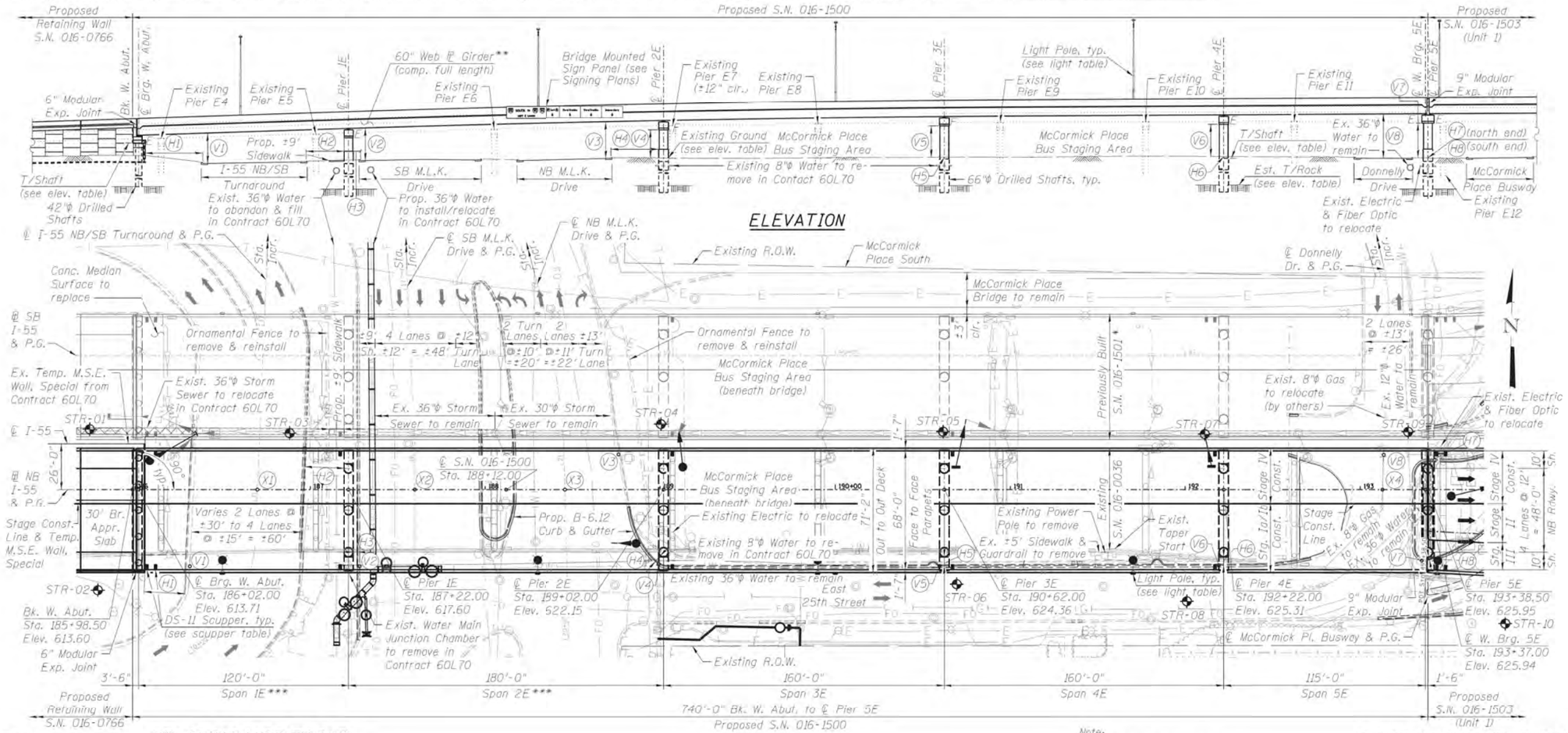

LEGEND

- Exist. Aerial Line
- Exist. Electric Line
- Exist. Fence
- Exist. Fiber Optic Line
- Exist. Gas Line
- Exist. Guardrail
- Exist. Storm Sewer
- Exist. Water Line
- STR-01 Soil Boring Location

MIN CLEARANCE TABLE

Horizontal		Vertical	
H1	23'-3"	V1	15'-2"
H2	22'-7"	V2	16'-5"
H3	2'-6"	V3	18'-11"
H4	4'-3"	V4	15'-8"
H5	5'-4"	V5	19'-0"
H6	4'-10"	V6	18'-9"
H7	1'-8"	V7	17'-11"
H8	1'-8"	V8	22'-6"

Vertical Clearances V4 to V7 measured from B/cap soffit to E. 25th Street.

PLAN

*Adjacent proposed S.N. 016-1501 previously built as part of Contract 60L70 before this contract.

**All girders to be thermally-sprayed (metalized) & all cross frames to be hot-dipped galvanized.

***Lighting to be provided under Spans 1E & 2E (see Electrical Plans).

Note: Proposed girders vertically clear all existing pier caps.

STATION EQUATION TABLE

Sta. Eqn.	Upper Roadway Alignment	Upper Roadway Station	Lower Roadway Alignment	Lower Roadway Station
X1	℄ NB I-55	186+69.82	℄ U-Turn	11+06.59
X2	℄ NB I-55	187+59.83	℄ SB MLK Dr.	15+85.91
X3	℄ NB I-55	188+45.77	℄ NB MLK Dr.	20+85.68
X4	℄ NB I-55	193+12.63	℄ Donnelly Dr.	25+80.20

EXISTING GROUND, TOP OF SHAFT, & BEDROCK ELEVATION TABLE

Pier	N. T/Gr.	S. T/Gr.	T/Shaft	T/Rock
W. Ab.	N/A	N/A	603.30	541.50
1E	595.05	595.45	592.50	543.25
2E	595.75	595.50	592.50	537.25
3E	595.85	595.15§	595.00	532.75
4E	596.50	595.35§	595.00	528.25
5E	596.20	596.60	595.00	529.25

§Proposed ground to be raised to Elev. 595.50.

MODEL: Default
FILE NAME: pw:\\planroom.dot.illinois.gov:PWIDOT\Documents\IDOT Offices\District 1\Projects\D132320\CADData\Design\D132320-eGeBge.dgn

USER NAME = diazia	DESIGNED -	REVISED -
	DRAWN -	REVISED -
PLOT SCALE = 100.0000 ' / in.	CHECKED -	REVISED -
PLOT DATE = 12/9/2019	DATE -	REVISED -

STATE OF ILLINOIS
DEPARTMENT OF TRANSPORTATION

EXISTING GENERAL PLAN
SN: 016-1500

SCALE: SHEET OF SHEETS STA. TO STA.

VAR. RTE.	SECTION	COUNTY	TOTAL SHEETS	SHEET NO.
VAR.	2019-155-BR	VARIOUS	107	14

CONTRACT NO. 62K32

ILLINOIS FED. AID PROJECT

FOR INFORMATION ONLY

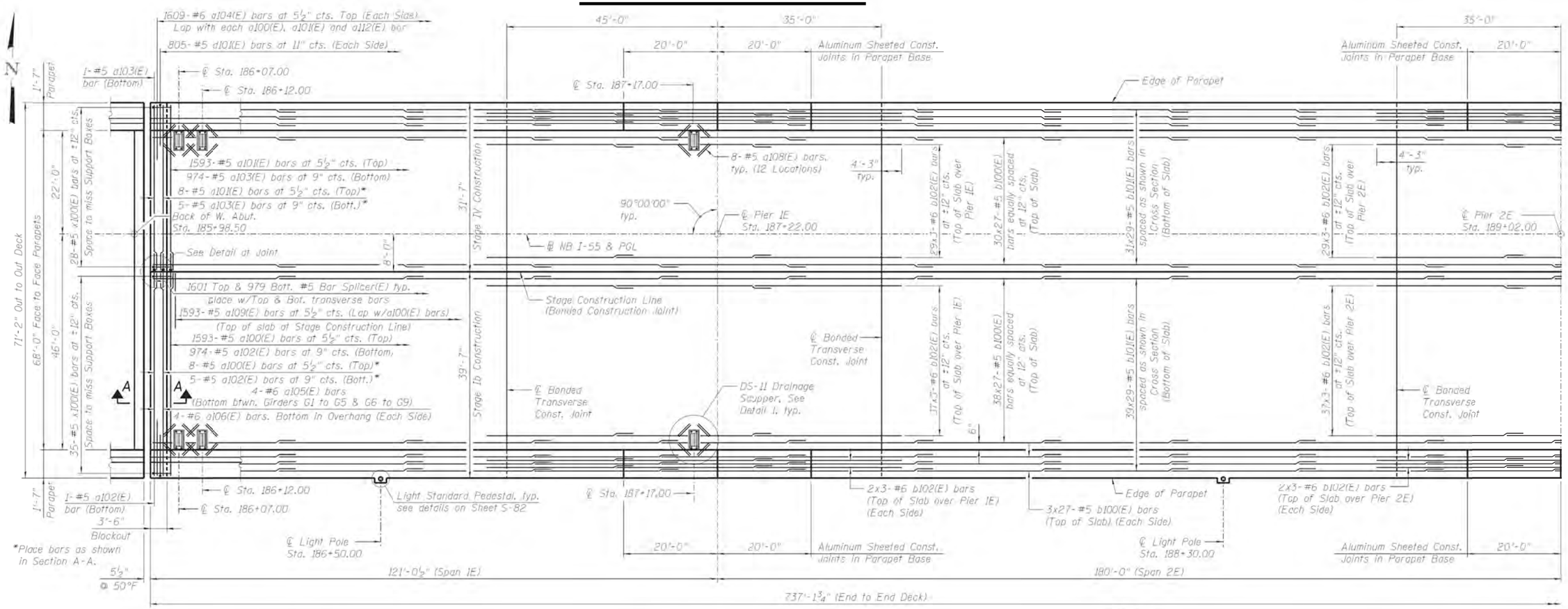

DECK PLAN I - S.N. 016-1500

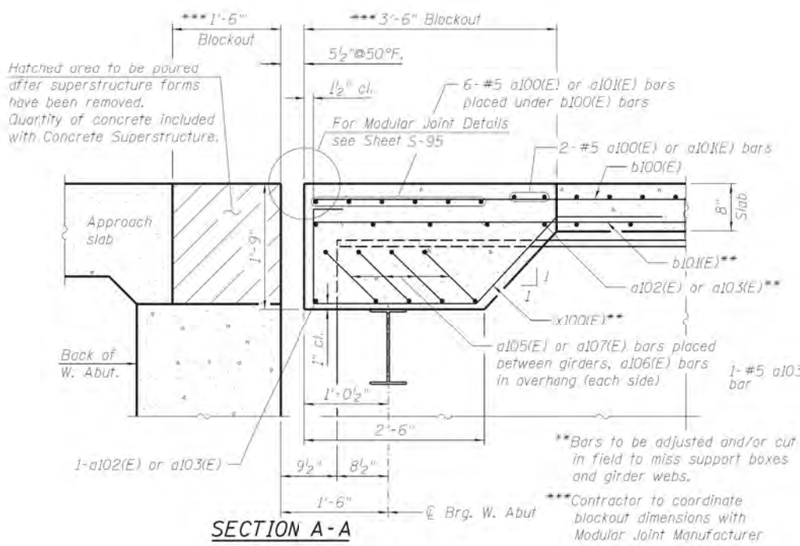

SECTION A-A

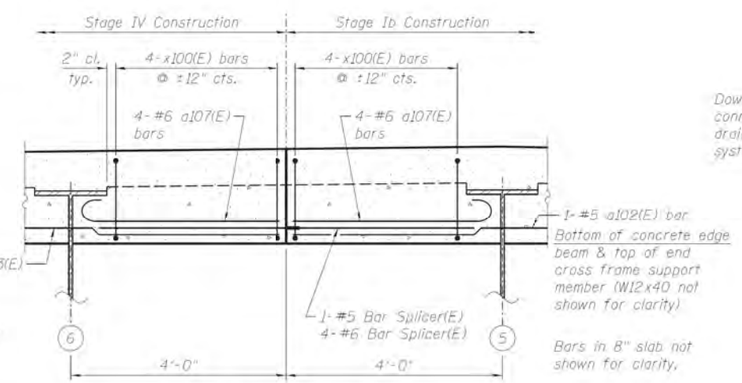

DETAIL AT JOINT

(Looking East)

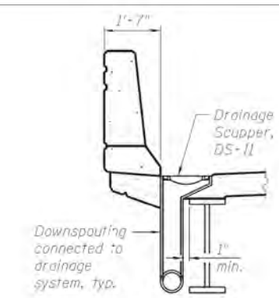

SECTION D-D

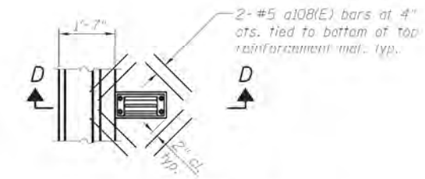

DETAIL 1
DRAINAGE SCUPPER DS-11

Note:
Cut longitudinal reinforcement to clear drainage scuppers.

NOTES:

1. Minimum lap for #5 bars shall be 3'-3" and for #6 bars shall be 3'-10".
2. Bars indicated thus 41x12-#5 etc. indicates 41 lines of bars with 12 lengths per line.
3. See Sheet S-77 for parapet reinforcement.
4. See Sheet S-82 for deck cross section.
5. See Sheet S-82 for light pole foundation details.
6. See Sheet S-82 for superstructure details and Bill of Material.
7. See Sheet S-87 for Deck Pouring Sequence.
8. See Sheet S-194 for Bar Splicer Details.
9. See Sheet S-103 for DS-11 Drainage Scupper.

MODEL: Default
FILE NAME: pw:\\planroom.dot.illinois.gov:PWIDOT\Documents\IDOT Offices\District 1\Projects\D132320\CADData\Design\D132320-eexdge.dgn

USER NAME = diazia	DESIGNED -	REVISED -	
	DRAWN -	REVISED -	
PLOT SCALE = 100.0000 ' / in.	CHECKED -	REVISED -	
PLOT DATE = 12/6/2019	DATE -	REVISED -	

STATE OF ILLINOIS
DEPARTMENT OF TRANSPORTATION

EXISTING DECK PLAN
SN: 016-1500

SCALE: | SHEET OF SHEETS | STA. TO STA.

VAR. RTE.	SECTION	COUNTY	TOTAL SHEETS	SHEET NO.
VAR.	2019-155-BR	VARIOUS	107	15
		CONTRACT NO. 62K32		
		ILLINOIS	FED. AID PROJECT	

FOR INFORMATION ONLY

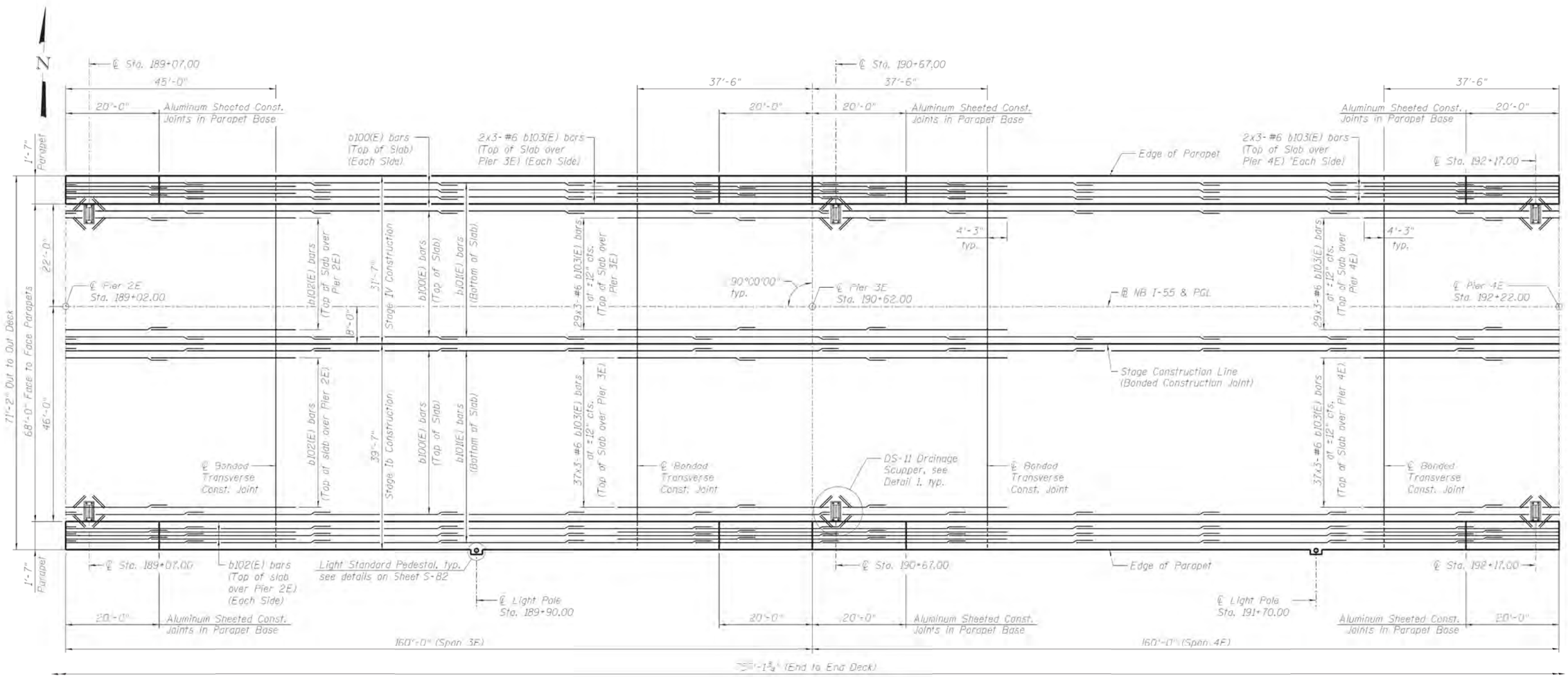

DECK PLAN II - S.N. 016-1500

NOTES:

1. Minimum lap for #5 bars shall be 3'-3" and for #6 bars shall be 3'-10".
2. Bars indicated thus 41x12-#5 etc. indicates 41 lines of bars with 12 lengths per line.
3. See Sheet S-77 for parapet reinforcement.
4. See Sheet S-82 for deck cross section.
5. See Sheet S-82 for light pole foundation details.
6. See Sheet S-82 for superstructure details and Bill of Material.
7. See Sheet S-87 for Deck Pouring Sequence.
8. See Sheet S-194 for Bar Splicer Details.
9. See Sheet S-66 for Detail 1 and Sheet S-103 for DS-11 Drainage Scupper.

MODEL: Default
FILE NAME: pw:\\bhroom.dot.illinois.gov:PWIDOT\Documents\IDOT Offices\District 1\Projects\D132320\CADData\Design\D132320-ebridge.dgn

USER NAME = diazia	DESIGNED -	REVISED -	
	DRAWN -	REVISED -	
PLOT SCALE = 100.0000 ' / in.	CHECKED -	REVISED -	
PLOT DATE = 12/6/2019	DATE -	REVISED -	

STATE OF ILLINOIS
DEPARTMENT OF TRANSPORTATION

EXISTING DECK PLAN
SN: 016-1500

SCALE: | SHEET OF SHEETS | STA. TO STA.

VAR. RTE.	SECTION	COUNTY	TOTAL SHEETS	SHEET NO.
VAR.	2019-155-BR	VARIOUS	107	16
		CONTRACT NO. 62K32		
	ILLINOIS	FED. AID PROJECT		

FOR INFORMATION ONLY

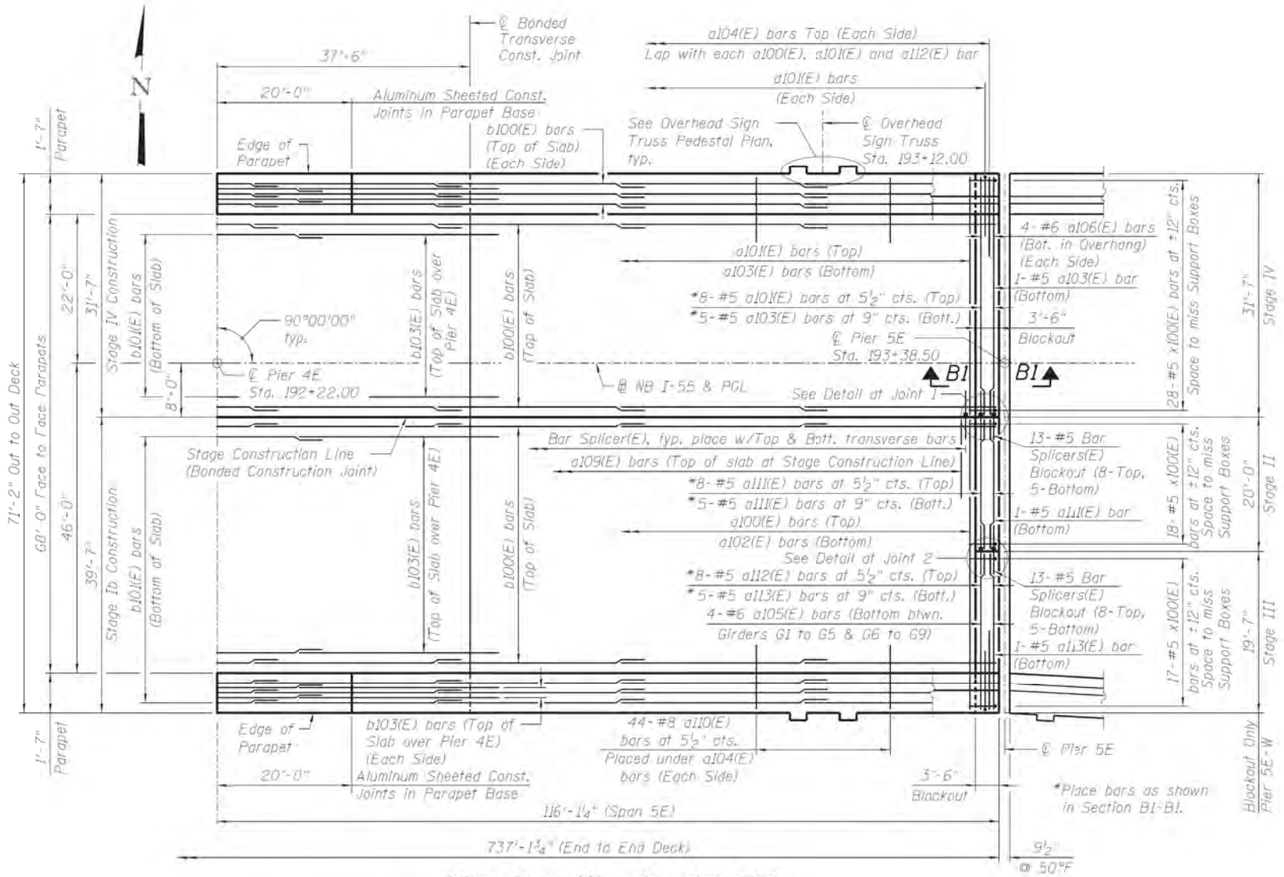

DECK PLAN III - S.N. 016-1500

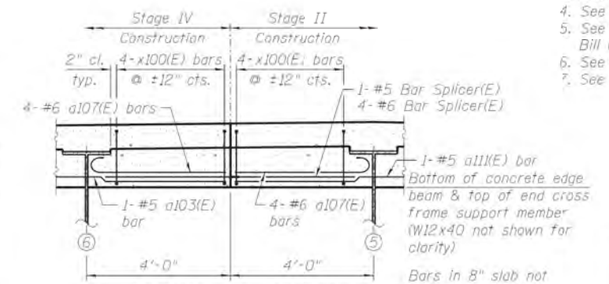

DETAIL AT JOINT 1

(Looking East)

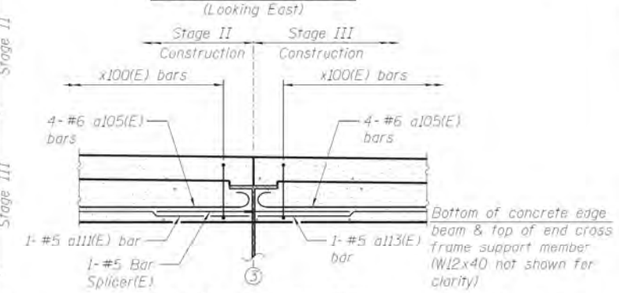

DETAIL AT JOINT 2

(Looking East)

NOTES:

1. Minimum lap for #5 bars shall be 3'-3" and for #6 bars shall be 3'-10".
2. Bars indicated thus 41x12-#5 etc. indicates 41 lines of bars with 12 lengths per line.
3. See Sheet S-77 for parapet reinforcement.
4. See Sheet S-82 for deck cross section.
5. See Sheet S-82 for superstructure details and Bill of Material.
6. See Sheet S-87 for Deck Pouring Sequence.
7. See Sheet S-194 for Bar Splicer Details.

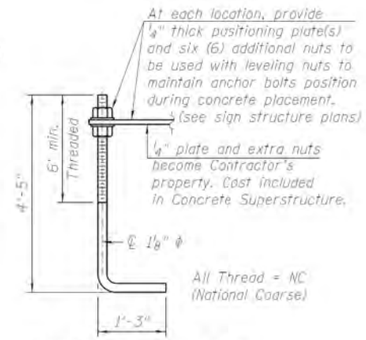

ANCHOR ROD DETAIL

Anchor rods shall conform to ASTM F1554 Grade 105.
Galvanize upper 12" minimum per AASHTO M232.
No welding shall be permitted on rods.

Cost of Anchor Rods is included with Concrete Superstructure.

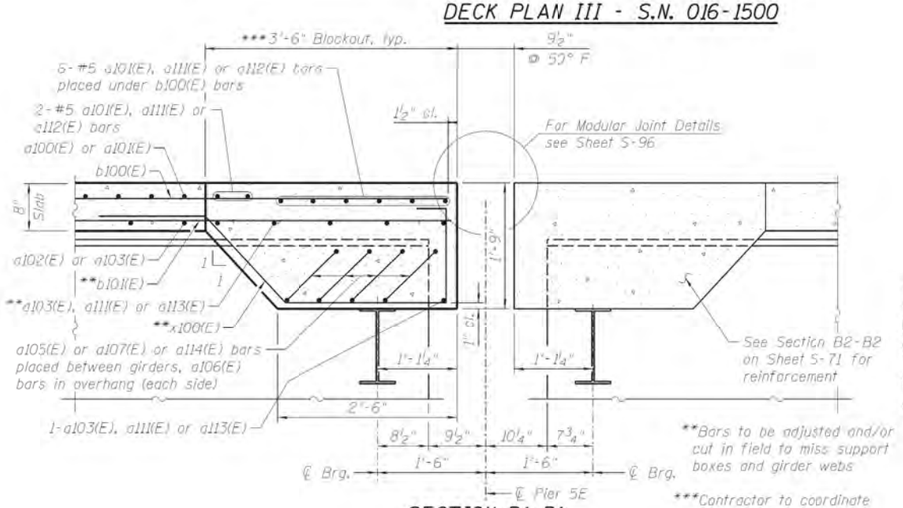

SECTION B1-B1

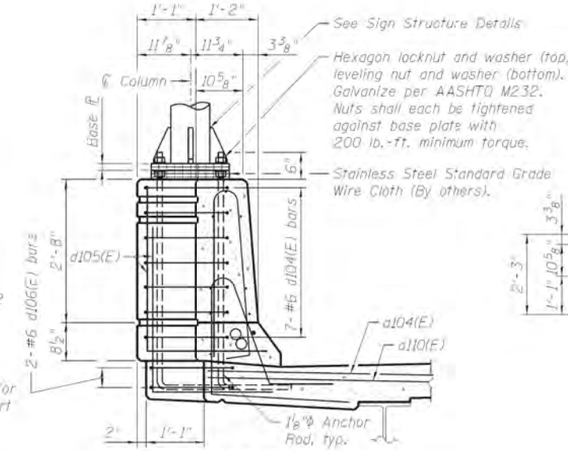

SECTION Q-Q

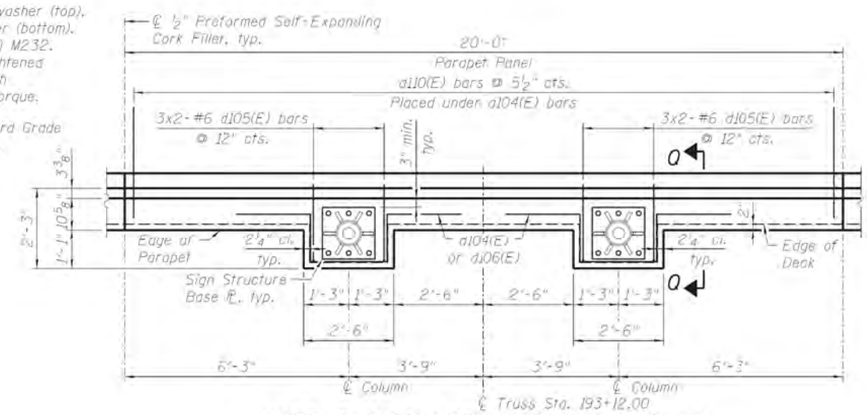

OVERHEAD SIGN TRUSS PEDESTAL PLAN

MODEL: Default
FILE NAME: pw:\\planroom.dot.illinois.gov:PWIDOT\Documents\IDOT Offices\District 1\Projects\D132320\CADData\Design\D132320-sht4dgn.dgn

USER NAME = diazia	DESIGNED -	REVISED -	
	DRAWN -	REVISED -	
PLOT SCALE = 100.0000 ' / in.	CHECKED -	REVISED -	
PLOT DATE = 12/6/2019	DATE -	REVISED -	

STATE OF ILLINOIS
DEPARTMENT OF TRANSPORTATION

EXISTING DECK PLAN
SN: 016-1500

SCALE: | SHEET OF SHEETS | STA. TO STA.

VAR. RTE.	SECTION	COUNTY	TOTAL SHEETS	SHEET NO.
VAR.	2019-155-BR	VARIOUS	107	17
		CONTRACT NO. 62K32		
		ILLINOIS FED. AID PROJECT		

FOR INFORMATION ONLY

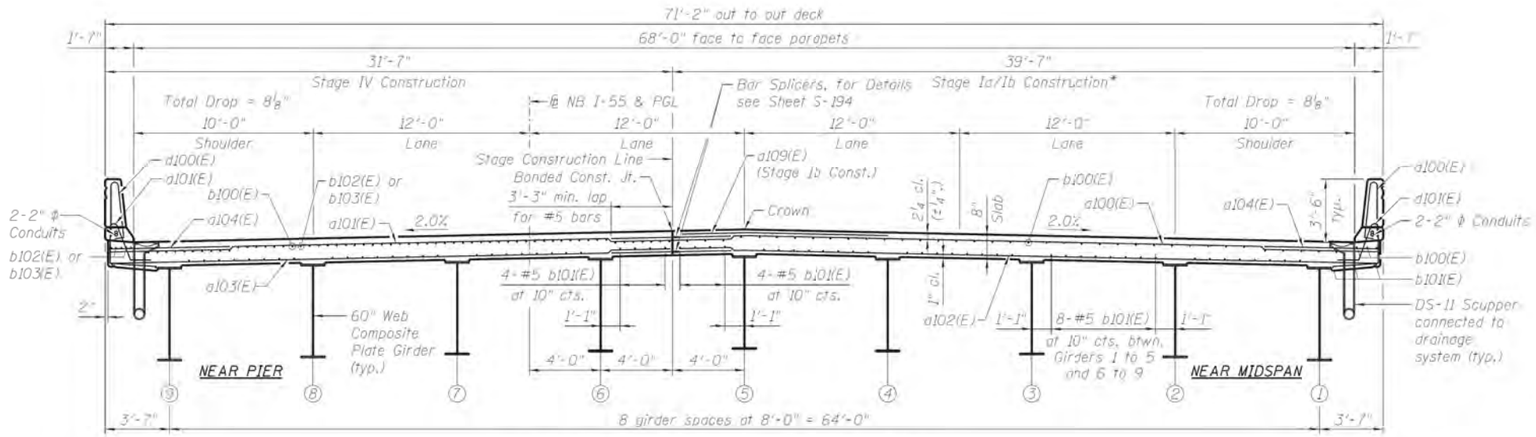

DECK CROSS SECTION - S.N. 016-1500

(Looking East)

*Girders in Spans 1E, 2E & 3E will be erected during Stage Ia. Girders in Spans 4E & 5E will be erected in Stage Ib. Deck will be poured in Stage Ib after all girders have been erected for Spans 1E thru 5E.

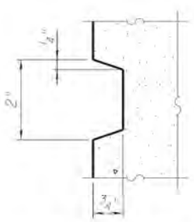

REVEAL DETAIL

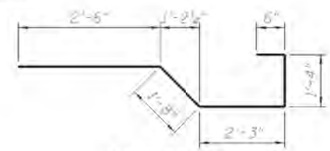

BAR x100(E)

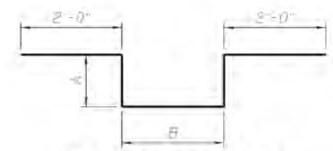

BARS d102(E), d104(E) & d106(E)

A & B DIMENSIONS

Bar	A	B
d102(E)	1'-4"	2'-1"
d104(E)	1'-7"	2'-1"
d106(E)	1'-7"	1'-9"

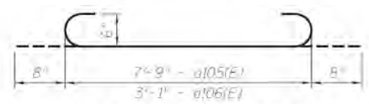

BARS d105(E) & d106(E)

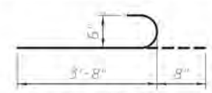

BAR a107(E)

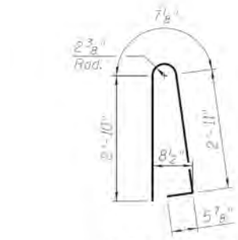

BAR d100(E)

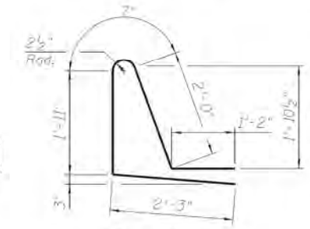

BAR d101(E)

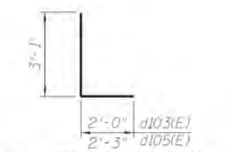

BARS d103(E) & d105(E)

SUPERSTRUCTURE BILL OF MATERIAL S.N. 016-1500

Bar	No.	Size	Length	Shape
a100(E)	1601	#5	39'-1"	
a101(E)	1609	#5	31'-1"	
a102(E)	980	#5	33'-9"	
a103(E)	986	#5	30'-9"	
a104(E)	3218	#6	6'-6"	
a105(E)	56	#6	9'-1"	
a106(E)	16	#6	4'-5"	
a107(E)	16	#6	4'-4"	
a108(E)	96	#5	1'-6"	
a109(E)	1593	#5	11'-10"	
a110(E)	88	#8	8'-5"	
a111(E)	13	#5	19'-9"	
a112(E)	8	#5	19'-1"	
a113(E)	5	#5	18'-9"	
b100(E)	1998	#5	30'-5"	
b101(E)	2030	#5	28'-7"	
b102(E)	420	#6	32'-1"	
b103(E)	420	#6	30'-5"	
d100(E)	1818	#5	6'-10"	
d101(E)	1610	#5	7'-11"	
d102(E)	24	#6	8'-9"	
d103(E)	12	#6	5'-1"	
d104(E)	28	#6	5'-3"	
d105(E)	24	#6	5'-4"	
d106(E)	8	#6	8'-11"	
e100(E)	506	#4	19'-9"	
e101(E)	14	#4	20'-9"	
e102(E)	14	#4	15'-10"	
e103(E)	8	#4	26'-8"	
e104(E)	10	#4	23'-7"	
e105(E)	28	#4	25'-7"	
e106(E)	8	#8	29'-1"	
e107(E)	16	#8	19'-9"	
e108(E)	10	#8	32'-1"	
e109(E)	20	#8	28'-1"	
e110(E)	8	#8	27'-10"	
x100(E)	126	#5	8'-3"	
Reinforcement Bars, Epoxy Coated			Found	447,380
Concrete Superstructure			Cu. Yd.	1,642.6
Bridge Deck Grooving (Longitudinal)			Sq. Yd.	5,406
Protective Coat			Sq. Yd.	6,326

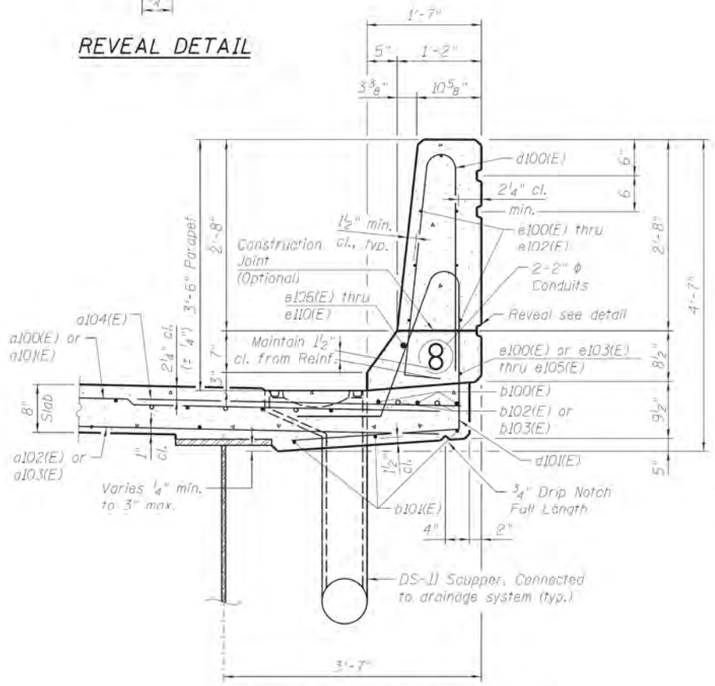

SECTION THRU PARAPET

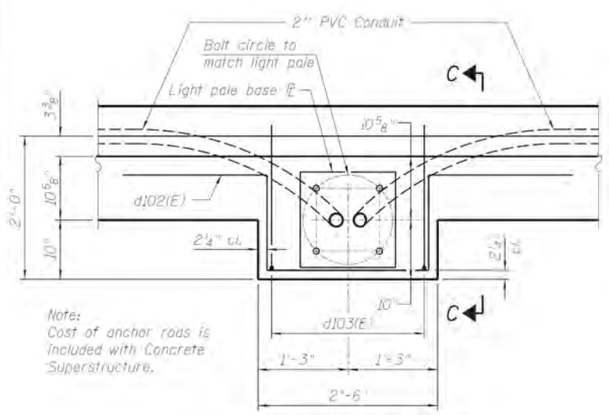

Note:
Cost of anchor rods is included with Concrete Superstructure.

PLAN AT LIGHT POLE

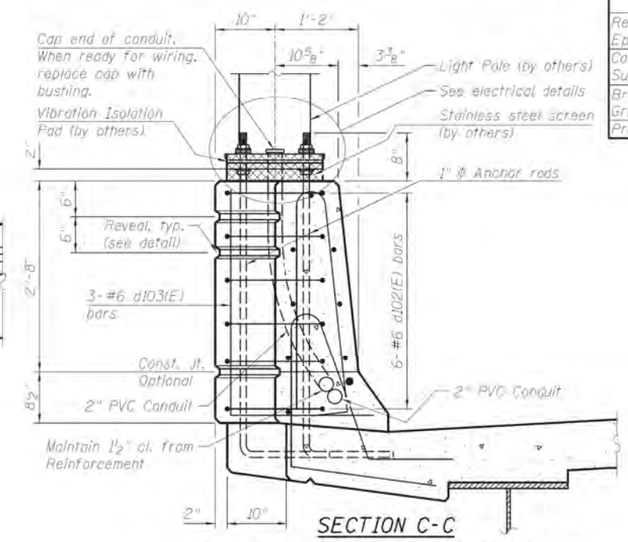

SECTION C-C

LIGHT POLE MOUNTED ON PARAPET

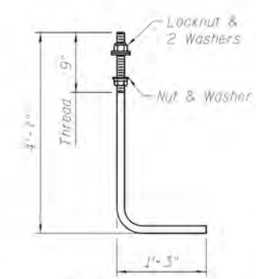

ANCHOR ROD

Diameter as specified for light poles. (ASTM F 1554 Grade 105) Full length hot dipped galvanized.

MODEL: Default
FILE NAME: pw:\\dameroom.dot.illinois.gov:PWIDOT\Documents\IDOT Offices\District 1\Projects\D132320\CADData\Design\D132320-ExtRdge.dgn

USER NAME = diazia	DESIGNED -	REVISED -	
	DRAWN -	REVISED -	
PLOT SCALE = 100.0000 ' / in.	CHECKED -	REVISED -	
PLOT DATE = 12/6/2019	DATE -	REVISED -	

STATE OF ILLINOIS
DEPARTMENT OF TRANSPORTATION

EXISTING CROSS SECTION
SN: 016-1500

SCALE: SHEET OF SHEETS STA. TO STA.

VAR. RTE.	SECTION	COUNTY	TOTAL SHEETS	SHEET NO.
VAR.	2019-155-BR	VARIOUS	107	18
		CONTRACT NO. 62K32		
	ILLINOIS	FED. AID PROJECT		

FOR INFORMATION ONLY

Bench Mark: BM-4, chiseled square on NE corner of crashwall at existing Pier E20, just East of Moe Drive, on existing S.N. 016-1075 carrying NB I-55 to NB L.S.D., Elev. 594.65 (NAVD 88).

Existing Structure: (no salvaging) S.N. 016-1055 was built in 1965 & carries SB I-55 traffic over I-55 NB/SB Turnaround, Martin Luther King Jr. Drive, McCormick Place Bus Staging Area, & Donnelly Drive. The 1215'-9" long structure has a 299'-9" west terminal structure (Unit 1), with 10-spans of 88'-110'-88' (Unit 2), 2x102' (Unit 3), 83'-104'-83' (Unit 4), & 2x78' (Unit 5). The out-to-out deck width is a constant 59'-7", which provides a clear roadway width of 56'-0". The structure uses 50" steel plate girders composite with a 7.5" concrete deck, 3-4 column concrete piers, & concrete caissons drilled into rock. It was rehabilitated in 1975 (deck repair, exp. joint replacement, & steel repainting), 1990 (bearing replacement), 1994 (deck repair, exp. joint replacement, & pier repair), 2000 (damaged girder repairs), 2002 (steel repainting), 2005 (pier repair), and 2008 (deck repair).

Traffic Control: For Stage Ia, maintain 3-lanes of WB traffic on existing S.N. 016-1055 during construction of Spans 13W-20W (Units 1-3) & west half of Spans 21W-22W (Unit 4) of proposed S.N. 016-1505. For Stage Ib, reduce WB traffic to 2-lanes on north half of existing S.N. 016-1055 for construction of south half of Spans 1W-5W of proposed S.N. 016-1501, south 1/3 of Spans 6W-8W of proposed S.N. 016-1504 (Unit 1), & east half of Spans 10W-12W of proposed S.N. 016-1504 (Unit 2). Note that WB traffic will not have to change during special events at McCormick Place & Soldier Field in Stage Ib. For Stage IIa, maintain 1-lane of WB traffic on north half of existing S.N. 016-1055 along with 1-lane of WB traffic on south half of proposed S.N. 016-1501 during construction of center 1/3 of Spans 6W-8W of proposed S.N. 016-1504 (Unit 1), Span 9W & west half of Spans 10W-12W of proposed S.N. 016-1504 (Unit 2), & east half of Spans 21W-22W of proposed S.N. 016-1505 (Unit 4). For Stage IIb, shift WB traffic & increase to 3-lanes on south half of proposed S.N. 016-1501 during construction of north half of Spans 1W-5W of proposed S.N. 016-1501 & north 1/3 of Spans 6W-8W of proposed S.N. 016-1504 (Unit 1). Temporary lane closures may be required for the I-55 NB/SB Turnaround, Martin Luther King Jr. Drive, McCormick Place Bus Staging Area, Donnelly Drive, & East 25th Street.

DS-11 SCUPPER TABLE

ID	Station	Offset
1	86+07.00	22'-0" (Lt.)
2	86+07.00	46'-0" (Rt.)
3	86+12.00	22'-0" (Lt.)
4	86+12.00	46'-0" (Rt.)
5	87+17.00	22'-0" (Lt.)
6	87+17.00	46'-0" (Rt.)
7	89+07.00	22'-0" (Lt.)
8	89+07.00	46'-0" (Rt.)
9	90+67.00	22'-0" (Lt.)
10	90+67.00	46'-0" (Rt.)
11	92+12.00	22'-0" (Lt.)
12	92+17.00	22'-0" (Lt.)

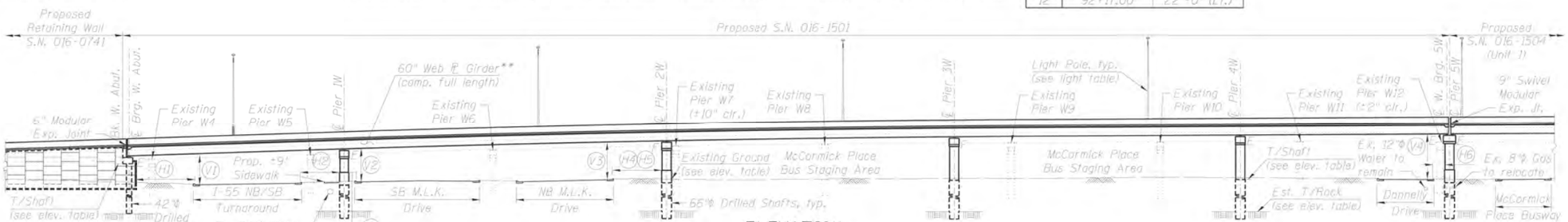

ELEVATION

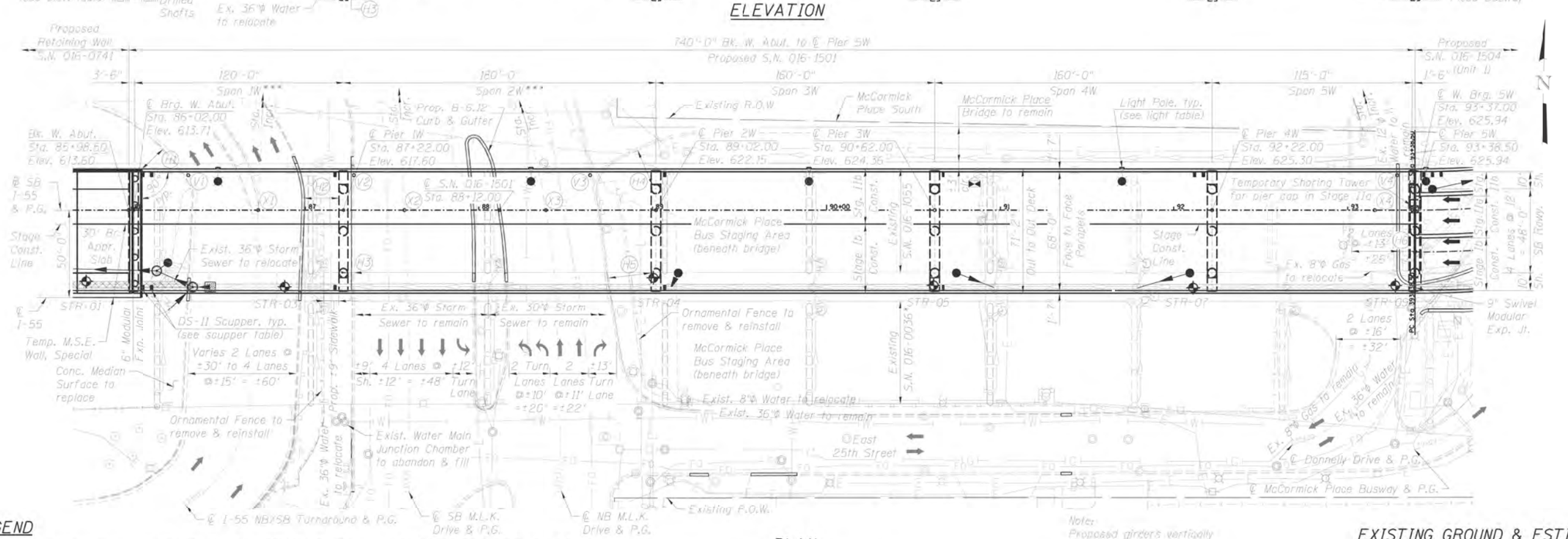

LEGEND

—A—A—	Exist. Aerial Line
—E—E—	Exist. Electric Line
—X—X—	Exist. Fence
—FO—FO—	Exist. Fiber Optic Line
—G—G—	Exist. Gas Line
	Exist. Guardrail
	Exist. Storm Sewer
—W—W—	Exist. Water Line
STR-01	Soil Boring Location

MIN CLEARANCE TABLE

Horizontal		Vertical	
H1	17'-1"	V1	15'-7"
H2*	20'-0"	V2	16'-6"
H3	2'-6"	V3	18'-2"
H4	22'-4"	V4	21'-10"
H5	25'-2"	V5	N/A
H6	6'-7"	V6	N/A

LIGHT PEDESTAL TABLE

ID	Station	Offset	Horiz. Clr.
AM2	86+50.00	23'-7" (Lt.)	2'-2"
AN1	88+30.00	23'-7" (Lt.)	2'-3"
AM1	89+90.00	23'-7" (Lt.)	2'-5"
AA1	91+70.00	23'-7" (Lt.)	3'-2"

Aluminum light poles have a 10"φ (15"φ bolt circle), possess height of 45', support 6-8' mast arms, & are mounted on the parapets.

PLAN

*Adjacent existing S.N. 016-0036 to be replaced by proposed S.N. 016-1500 with Contract 60X07.

**All girders to be thermally-sprayed (metalized) & all cross frames to be hot-dipped galvanized.

***Lighting to be provided under Spans 1W & 2W (see Electrical Plans).

Note: Proposed girders vertically clear all existing pier caps.

STATION EQUATION TABLE

Sta. Eqn.	Upper Roadway Alignment	Upper Roadway Station	Lower Roadway Alignment	Lower Roadway Station
X1	℄ SB I-55	86+73.01	℄ U-Turn	11+82.66
X2	℄ SB I-55	87+57.31	℄ SB MLK Dr.	16+61.98
X3	℄ SB I-55	88+38.90	℄ NB MLK Dr.	21+62.09
X4	℄ SB I-55	93+15.45	℄ Donnelly Dr.	26+56.26

EXISTING GROUND & ESTIMATED BEDROCK ELEVATION TABLE

Pier	N. T/GR.	S. T/GR.	T/Shaft	T/Rock
W.Ab.	N/A	N/A	603.30	541.50
1W	595.25	594.70	592.50	543.25
2W	595.90	595.80	592.50	537.25
3W	597.15	596.10	595.00	533.50
4W	597.65	596.70	595.00	528.25
5W	597.40	596.40	595.00	529.25

USER NAME = diazia	DESIGNED -	REVISED -	
	DRAWN -	REVISED -	
PLOT SCALE = 100.0000 ' / in.	CHECKED -	REVISED -	
PLOT DATE = 12/6/2019	DATE -	REVISED -	

STATE OF ILLINOIS
DEPARTMENT OF TRANSPORTATION

EXISTING GENERAL PLAN
SN: 016-1501

SCALE: SHEET OF SHEETS STA. TO STA.

VAR. RTE.	SECTION	COUNTY	TOTAL SHEETS	SHEET NO.
VAR.	2019-155-BR	VARIOUS	107	19
		CONTRACT NO. 62K32		
		ILLINOIS FED. AID PROJECT		

MODEL: Default
FILE NAME: pw:\\planroom.dot.illinois.gov:PWIDOT\Documents\IDOT Offices\District 1\Projects\D132320\CADData\Design\D132320-sht-dge.dgn

FOR INFORMATION ONLY

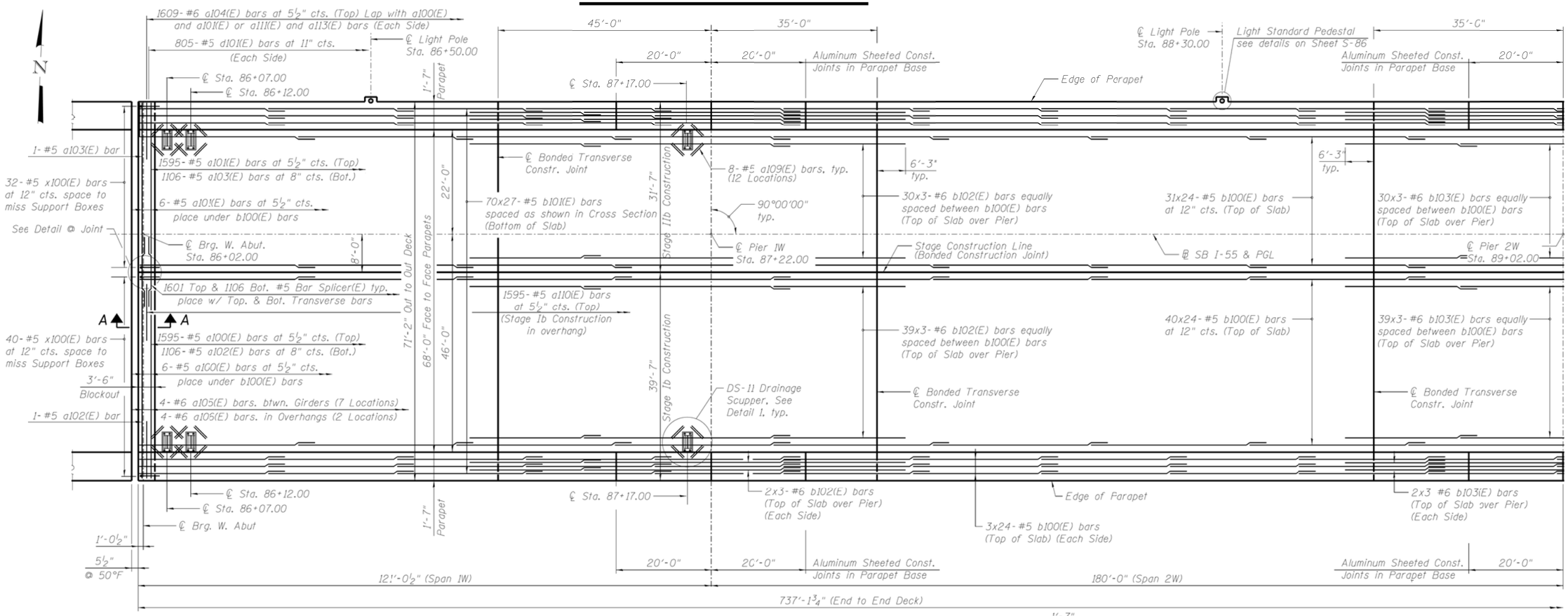

DECK PLAN I - S.N. 016-1501

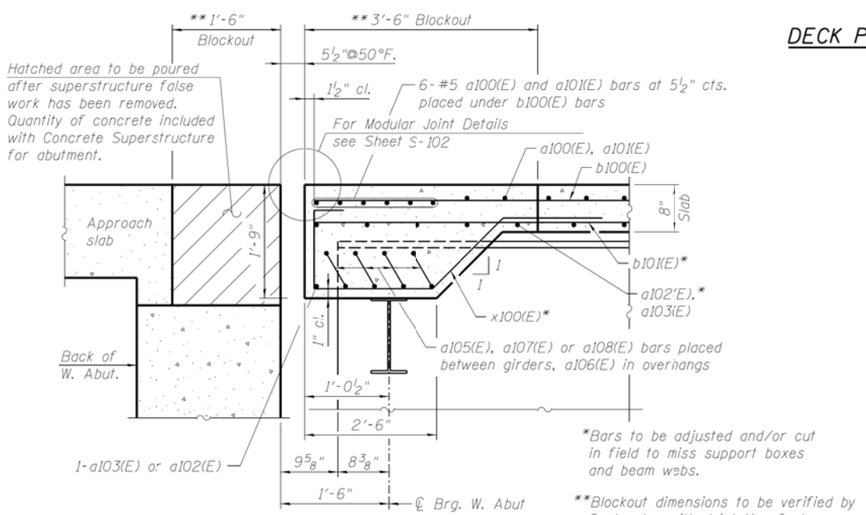

*Bars to be adjusted and/or cut in field to miss support boxes and beam webs.

**Blockout dimensions to be verified by Contractor with Joint Manufacturer

SECTION A-A

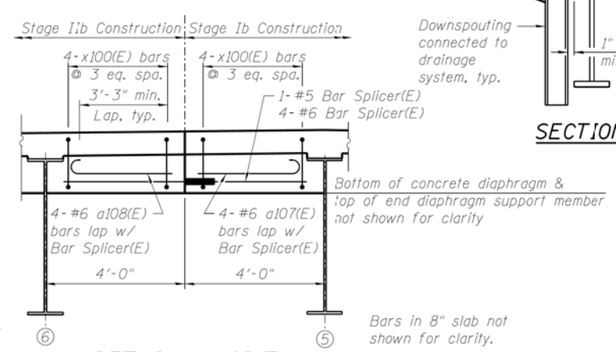

Bars in 8" slab not shown for clarity.

DETAIL @ JOINT

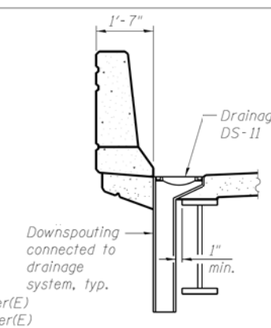

SECTION D-D

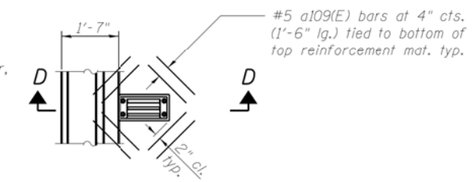

DETAIL 1
DRAINAGE SCUPPER DS-11

Note:
Reinforcement bars designated (E) shall be epoxy coated.
Cut longitudinal reinforcement to clear drainage scuppers.

NOTES:

1. Minimum lap for #5 bars shall be 3'-3" and for #6 bars shall be 3'-10".
2. Bars indicated 69x12- #5 etc. indicates 69 lines of bars with 12 lengths per line.
3. See Sheet S-79 for parapet reinforcement.
4. See Sheet S-86 for deck cross section.
5. See Sheet S-86 for Bill of Material.
6. See Sheet S-111 for DS-11 Drainage Scupper.
7. See Sheet S-94 for Deck Pouring Sequence.

MODEL: Default
FILE NAME: pw:\\uhanroom.dot.illinois.gov:PWIDOT\Documents\IDOT Offices\District 1\Projects\D132320\CADData\Design\D132320-eplrdlge.dgn

USER NAME = diazia	DESIGNED -	REVISED -	
	DRAWN -	REVISED -	
PLOT SCALE = 100.0000 ' / in.	CHECKED -	REVISED -	
PLOT DATE = 12/6/2019	DATE -	REVISED -	

STATE OF ILLINOIS
DEPARTMENT OF TRANSPORTATION

EXISTING DECK PLAN
SN: 016-1501

SCALE: | SHEET OF SHEETS | STA. TO STA.

VAR. RTE.	SECTION	COUNTY	TOTAL SHEETS	SHEET NO.
VAR.	2019-155-BR	VARIOUS	107	20
		CONTRACT NO. 62K32		
		ILLINOIS	FED. AID PROJECT	

FOR INFORMATION ONLY

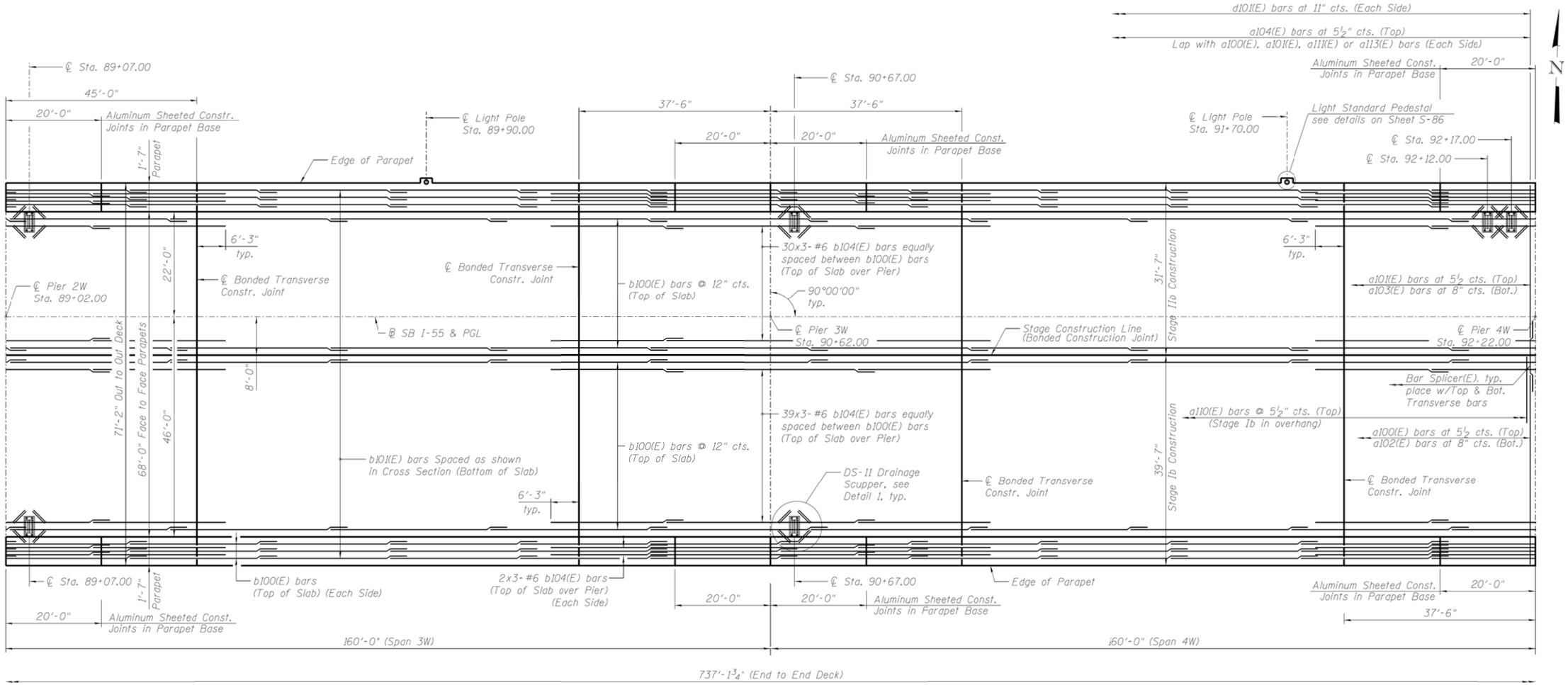

DECK PLAN II - S.N. 016-1501

NOTES:

1. Minimum lap for #5 bars shall be 3'-3" and for #6 bars shall be 3'-10".
2. Bars indicated 69x12-#5 etc. indicates 69 lines of bars with 12 lengths per line.
3. See Sheet S-79 for parapet reinforcement.
4. See Sheet S-86 for deck cross section.
5. See Sheet S-86 for Bill of Material.
6. See Sheet S-66, Detail 1, and Sheet S-111 for DS-11 Drainage Scupper.
7. See Sheet S-94 for Deck Pouring Sequence.

MODEL: Default
FILE NAME: pw:\\uhanroom.dot.illinois.gov:PWIDOT\Documents\IDOT Offices\District 1\Projects\D132320\CADData\Design\D132320-elprdlge.dgn

USER NAME = diazia	DESIGNED -	REVISED -	
	DRAWN -	REVISED -	
PLOT SCALE = 100.0000 ' / in.	CHECKED -	REVISED -	
PLOT DATE = 12/6/2019	DATE -	REVISED -	

STATE OF ILLINOIS
DEPARTMENT OF TRANSPORTATION

EXISTING DECK PLAN
SN: 016-1501

SCALE: | SHEET OF SHEETS | STA. TO STA.

VAR. RTE.	SECTION	COUNTY	TOTAL SHEETS	SHEET NO.
VAR.	2019-155-BR	VARIOUS	107	21
		CONTRACT NO. 62K32		
	ILLINOIS	FED. AID PROJECT		

FOR INFORMATION ONLY

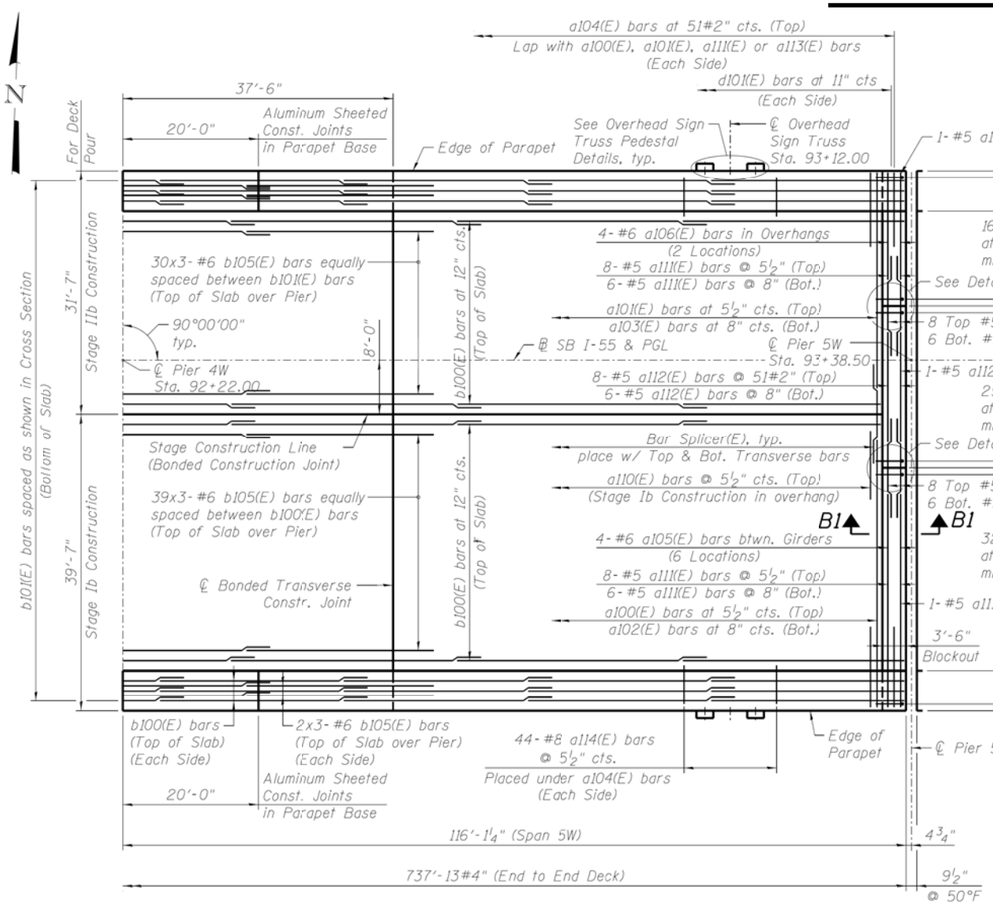

DECK PLAN III - S.N. 016-1501

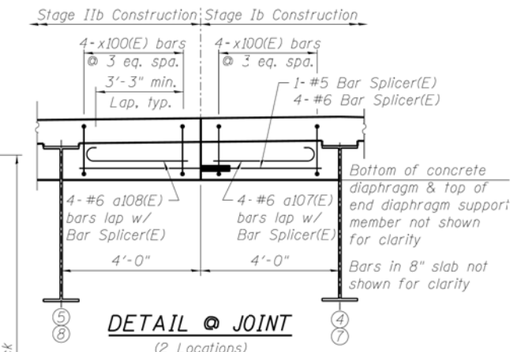

DETAIL @ JOINT

(2 Locations)

NOTES:

1. Minimum lap for #5 bars shall be 3'-3" and for #6 bars shall be 3'-10".
2. Bars indicated 69x12-#5 etc. indicates 69 lines of bars with 12 lengths per line.
3. See Sheet S-79 for parapet reinforcement.
4. See Sheet S-86 for deck cross section.
5. See Sheet S-86 for Bill of Material.
6. See Sheet S-66 for Detail 1, and Sheet S-111 for DS-11 Drainage Scupper.
7. See Sheet S-94 for Deck Pouring Sequence.

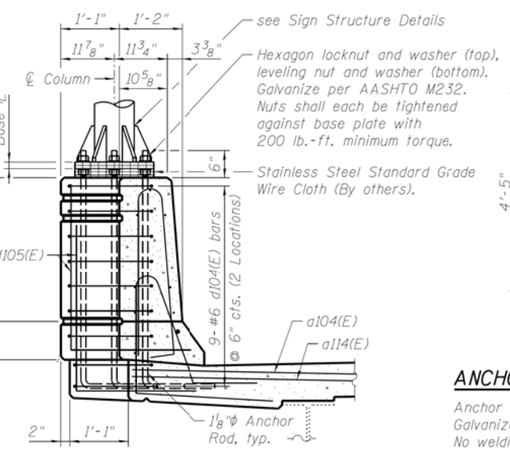

SECTION Q-Q

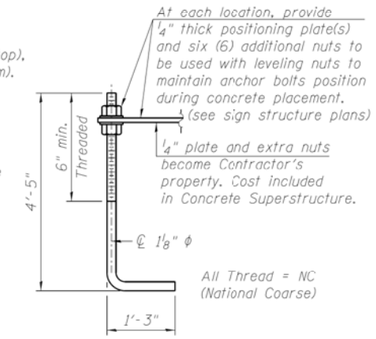

ANCHOR ROD DETAIL

Anchor rods shall conform to ASTM F1554 Grade 105. Galvanize upper 12" minimum per AASHTO M232. No welding shall be permitted on rods.

Cost of Anchor Rods is included with Concrete Superstructure.

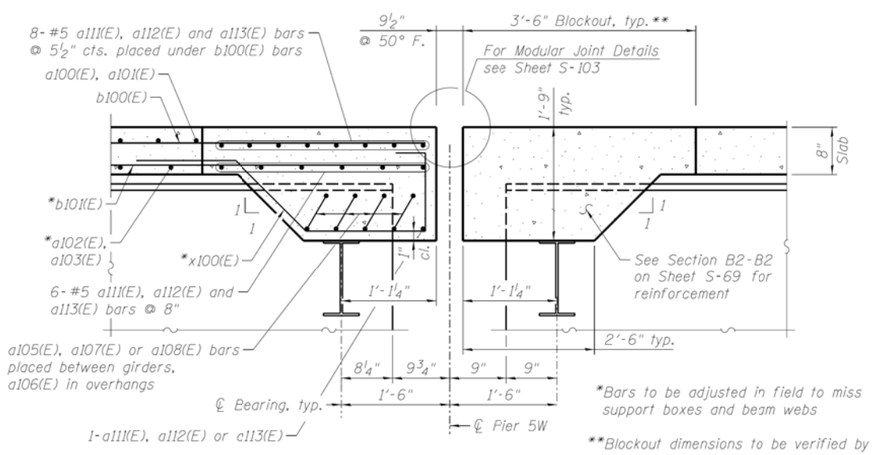

*Bars to be adjusted in field to miss support boxes and beam webs

**Blockout dimensions to be verified by Contractor with Joint Manufacturer

SECTION B1-B1

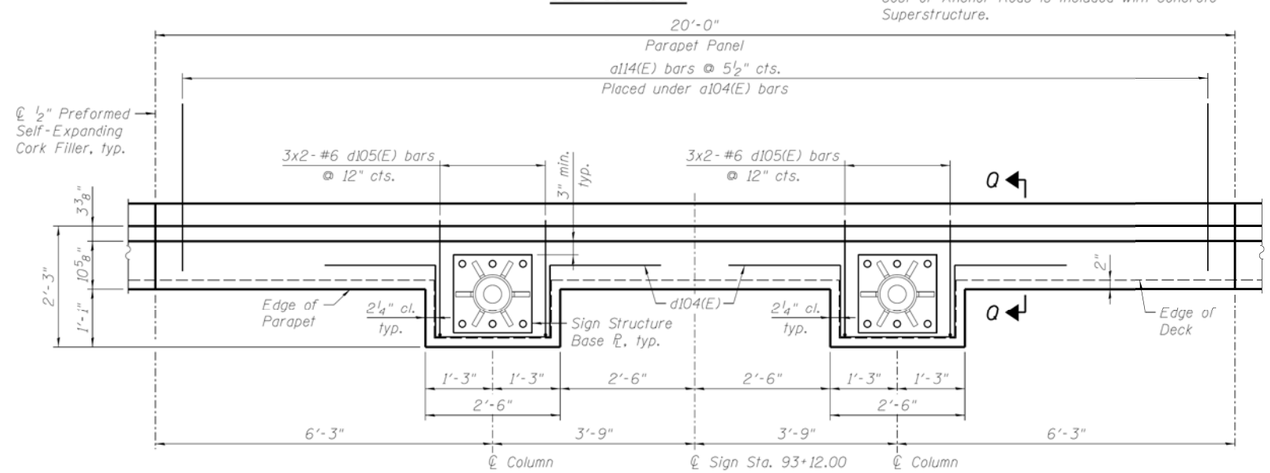

OVERHEAD SIGN TRUSS PEDESTAL PLAN

MODEL: Default
FILE NAME: pw:\\ildanoom.dot.illinois.gov:PWIDOT\Documents\IDOT Offices\District 1\Projects\D132320\CADData\Design\D132320-ebridge.dgn

USER NAME = diazia	DESIGNED -	REVISED -	
	DRAWN -	REVISED -	
PLOT SCALE = 100.0000 ' / in.	CHECKED -	REVISED -	
PLOT DATE = 12/6/2019	DATE -	REVISED -	

STATE OF ILLINOIS
DEPARTMENT OF TRANSPORTATION

EXISTING DECK PLAN
SN: 016-1501

SCALE: | SHEET OF SHEETS | STA. TO STA.

VAR. RTE.	SECTION	COUNTY	TOTAL SHEETS	SHEET NO.
VAR.	2019-155-BR	VARIOUS	107	22
		CONTRACT NO. 62K32		
	ILLINOIS	FED. AID PROJECT		

FOR INFORMATION ONLY

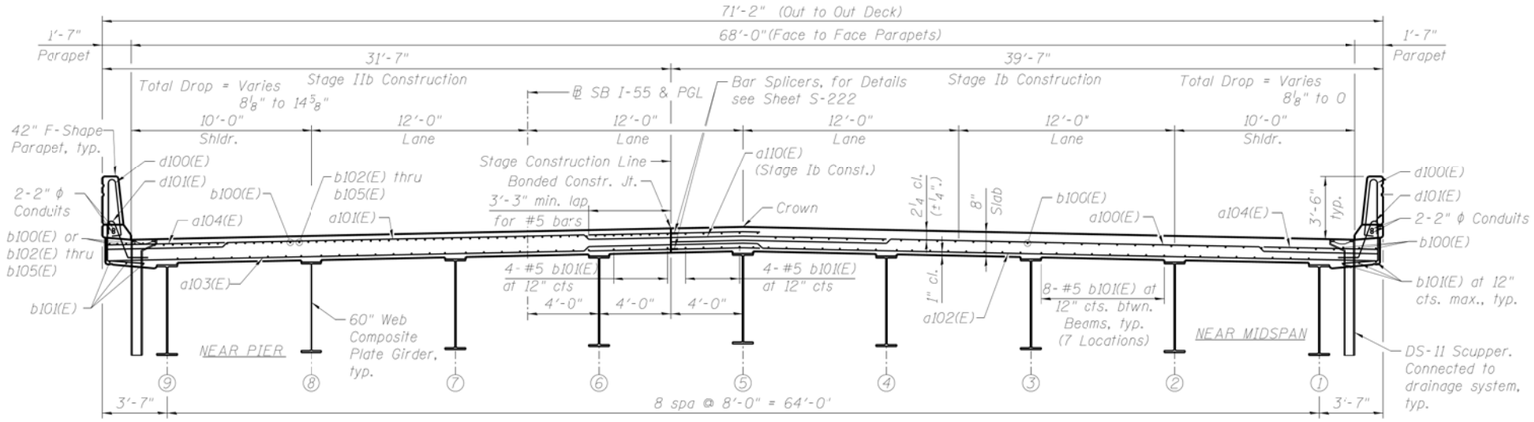

DECK CROSS SECTION - S.N. 016-1501

(Looking East)

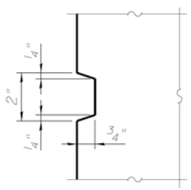

REVEAL DETAIL

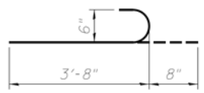

BAR a107(E) & a108(E)

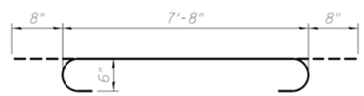

BAR a105(E)

BAR a106(E)

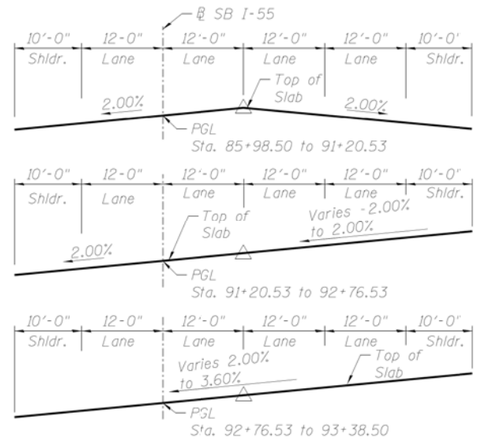

DECK CROSS SLOPE DETAIL

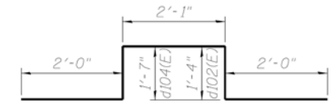

BAR d102(E), d104(E)

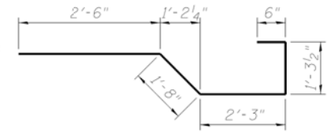

BAR x100(E)

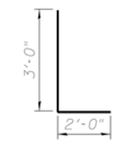

BAR d103(E)

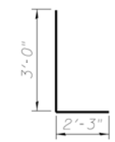

BAR d105(E)

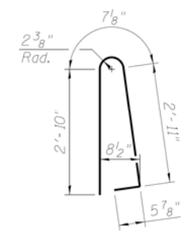

BAR d100(E)

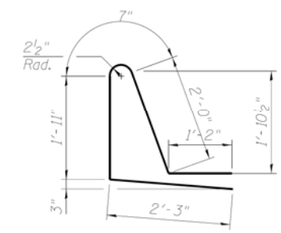

BAR d101(E)

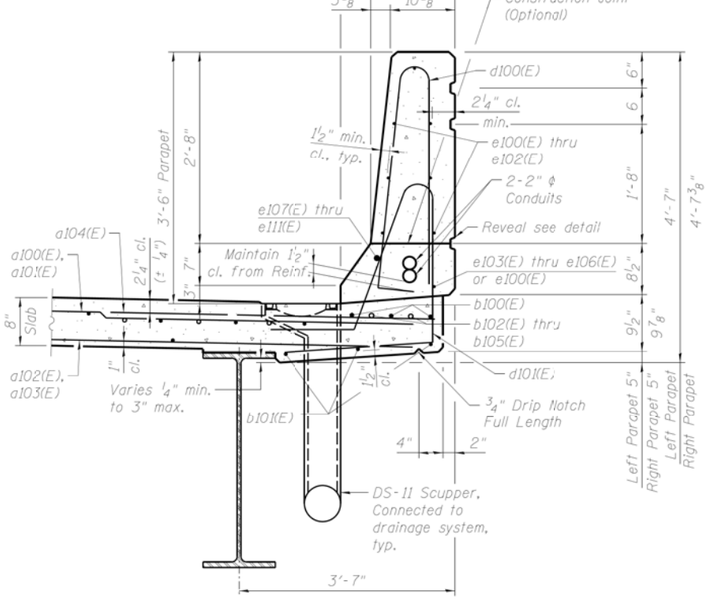

SECTION THRU PARAPET

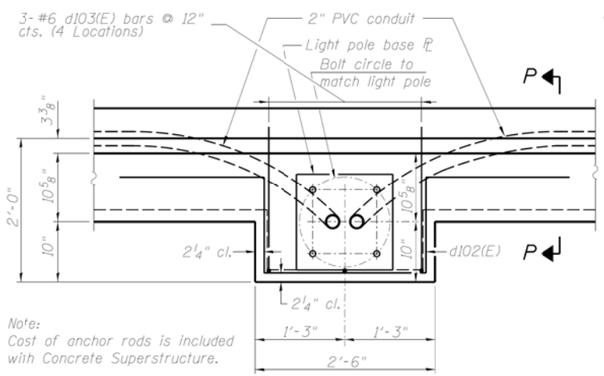

Note:
Cost of anchor rods is included with Concrete Superstructure.

PLAN

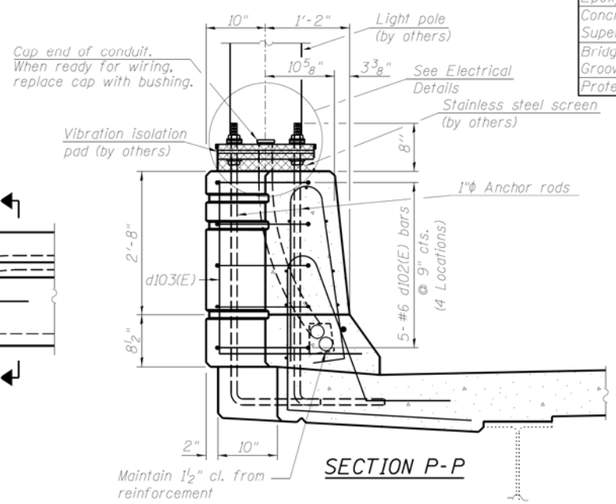

SECTION P-P

LIGHT POLE MOUNTED ON PARAPET

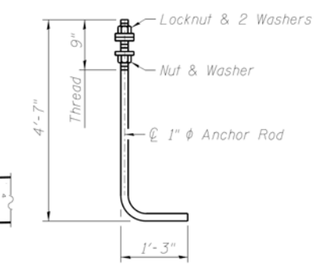

ANCHOR ROD

Diameter as specified for light poles. (ASTM F 1554 Grade 105)

BILL OF MATERIAL
S.N. 016-1501

Bar	No.	Size	Length	Shape
a100(E)	1601	#5	39'-1"	
a101(E)	1601	#5	31'-1"	
a102(E)	1107	#5	38'-11"	
a103(E)	1107	#5	30'-11"	
a104(E)	3218	#6	7'-1"	
a105(E)	52	#6	9'-0"	
a106(E)	16	#6	4'-5"	
a107(E)	12	#6	4'-4"	
a108(E)	12	#6	4'-4"	
a109(E)	96	#5	1'-6"	
a110(E)	1595	#5	11'-10"	
a111(E)	15	#5	31'-1"	
a112(E)	15	#5	23'-8"	
a113(E)	15	#5	15'-1"	
a114(E)	88	#8	8'-5"	
b100(E)	1848	#5	33'-10"	
b101(E)	1890	#5	30'-5"	
b102(E)	219	#6	33'-5"	
b103(E)	219	#6	33'-5"	
b104(E)	219	#6	31'-4"	
b105(E)	219	#6	31'-4"	
d100(E)	1818	#5	6'-10"	
d101(E)	1610	#5	7'-11"	
d102(E)	20	#6	8'-9"	
d103(E)	12	#6	5'-0"	
d104(E)	18	#6	9'-3"	
d105(E)	12	#6	5'-3"	
e100(E)	506	#4	19'-8"	
e101(E)	14	#4	20'-8"	
e102(E)	14	#4	15'-9"	
e103(E)	8	#4	26'-8"	
e104(E)	10	#4	29'-7"	
e105(E)	20	#4	25'-7"	
e106(E)	8	#4	25'-6"	
e107(E)	8	#8	29'-1"	
e108(E)	16	#8	19'-8"	
e109(E)	10	#8	32'-1"	
e110(E)	20	#8	28'-1"	
e111(E)	8	#8	27'-10"	
x100(E)	145	#5	8'-2 1/2"	
Reinforcement Bars, Epoxy Coated			Pound	462,880
Concrete Superstructure			Cu. Yd.	1,606.0
Bridge Deck Grooving (Longitudinal)			Sq. Yd.	5,406
Protective Coat			Sq. Yd.	6,312

MODEL: Default
FILE NAME: pw:\\ildanroom.dot.illinois.gov:PWIDOT\Documents\IDOT Offices\District 1\Projects\D132320\CADData\Design\D132320-eGirdge.dgn

USER NAME = diazia	DESIGNED -	REVISED -	
	DRAWN -	REVISED -	
PLOT SCALE = 100.0000 ' / in.	CHECKED -	REVISED -	
PLOT DATE = 12/6/2019	DATE -	REVISED -	

STATE OF ILLINOIS
DEPARTMENT OF TRANSPORTATION

EXISTING CROSS SECTION
SN: 016-1501

SCALE: | SHEET OF SHEETS | STA. TO STA.

VAR. RTE.	SECTION	COUNTY	TOTAL SHEETS	SHEET NO.
VAR.	2019-155-BR	VARIOUS	107	23
		CONTRACT NO. 62K32		
		ILLINOIS	FED. AID PROJECT	

FOR INFORMATION ONLY

Bench Mark: BM-4, chiseled square on NE corner of crashwall at existing Pier E20, just East of Moe Drive, on existing S.N. 016-1075 carrying NB I-55 to NB L.S.D., Elev. 594.65 (NAVD 88).

Existing Structure: (no salvaging) S.N. 016-1045 was built in 1965 & carries NB I-55 traffic to SB Lake Shore Drive over Metra Electric Railroad (4-tracks), Illinois Central Railroad (2-tracks), & Moe Drive. The 1268'-7" long structure has 13-spans of 125.99', 94.58', 110.09', 80.08', 90.67', 107.34', 64.82', 106', 78', 76', & 3x65' ending with a 140'-0" south terminal structure. The out-to-out deck width varies from 28'-3" (Spans 1-10) to 27'-3" (Spans 11-13). The structure utilizes 54" steel plate girders (Spans 1-8), W36 steel wide flange beams (Spans 9-10), & W33 steel wide flange beams (Spans 11-13) composite with a 7.5" concrete deck. Substructures use 2-3 column concrete piers & concrete caissons drilled in rock, except Pier ES7, which uses a 62" steel cap (fracture critical member) on concrete columns/caissons. It was rehabilitated in 1975 (deck repair, exp. joint replacement, & steel repainting), 1990 (bearing replacement), 1994 (deck repair, exp. joint replacement, & pier repair), 2002 (steel repainting), 2005 (pier repair), and 2008 (deck repair).

Traffic Control: For Stage Ia, keep 1-lane of ES traffic on south & west halves of existing S.N. 016-1045 for construction of south half of Spans 1E-3E of proposed S.N. 016-1500, south half of Spans 9E-10E of proposed S.N. 016-1503 (Unit 2), Spans 11E-14E of proposed S.N. 016-1503 (Unit 3), north & east halves of Spans 15E-18E of proposed S.N. 016-1502, & gore widening of existing S.N. 016-1075. For Stage Ib, continue prior ES traffic for construction of south half of Spans 4E-5E of proposed S.N. 016-1500 & temporary bridge from proposed S.N. 016-1500 to existing S.N. 016-1045. For Stage II, keep prior ES traffic for construction of center 1/3 of Spans 6E-8E of proposed S.N. 016-1503 (Unit 1). For Stage III, shift 1-lane of ES traffic to north & east halves of proposed S.N. 016-1502 for construction of south 1/3 of Spans 6E-8E of proposed S.N. 016-1503 (Unit 1) & south & west halves of Spans 15E-18E of proposed S.N. 016-1502. For Stage IV, increase ES traffic to 2-lanes on proposed S.N. 016-1502 for construction of north half of Spans 1E-5E of proposed S.N. 016-1500, north 1/3 of Spans 6E-8E of proposed S.N. 016-1503 (Unit 1), & north half of Spans 9E-10E of proposed S.N. 016-1503 (Unit 2). EN traffic may use proposed S.N. 016-1502 to access NB L.S.D. in Stage IV. Temporary lane closures may be required for Moe Drive & west shoulder of SB Lake Shore Drive.

EXISTING GROUND, TOP OF SHAFT, & BEDROCK ELEVATION TABLE

Pier	NE. T/Gr.	SW. T/Gr.	T/Shaft	T/Rock
8E	590.65	590.70	588.50	518.50
14E	590.90	590.80	585.00	526.75
15E	590.45	590.35	585.00	526.75
16E	592.50	592.25	585.00	522.50
S.Ab.	N/A	N/A	594.36	522.50

MIN CLEARANCE TABLE

Horizontal		Vertical	
H1	18'-6"	V1	12'-10"
H2	8'-3"	V2	15'-4"

Vertical Clearance V1 measured from B/pier cap to T/sidewalk.

DS-11 SCUPPER TABLE

ID	Station	Offset
1	498+73.55	22'-0" (Rt.)
2	500+38.55	22'-0" (Rt.)
3	502+13.55	22'-0" (Rt.)
4	503+33.55	22'-0" (Rt.)
5	503+38.55	22'-0" (Rt.)

LIGHT PEDESTAL TABLE

ID	Station	Offset
AG3	499+22.00	23'-7" (Rt.)
AH3	501+22.00	23'-7" (Rt.)
AG4	503+20.00	23'-7" (Rt.)

Aluminum light poles have a 10"Φ (15"Φ bolt circle), possess height of 45', support 6-8' mast arms, & are mounted on the parapets.

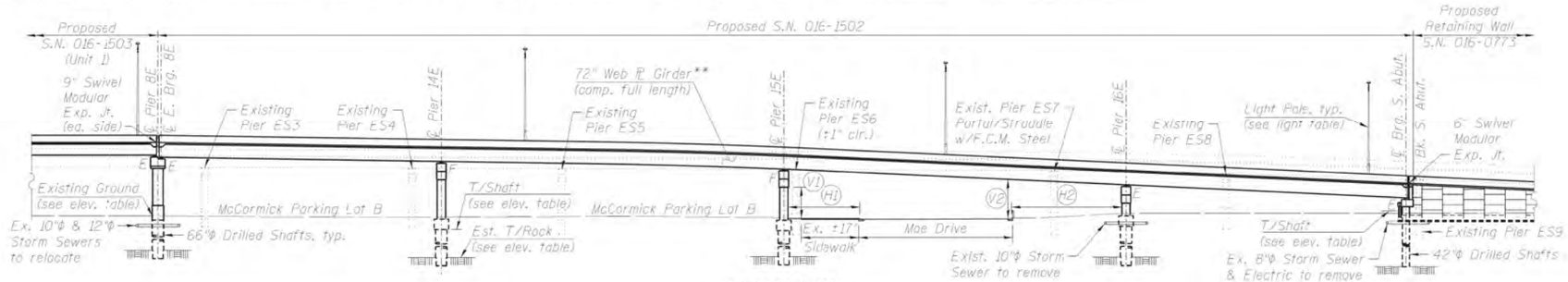

ELEVATION

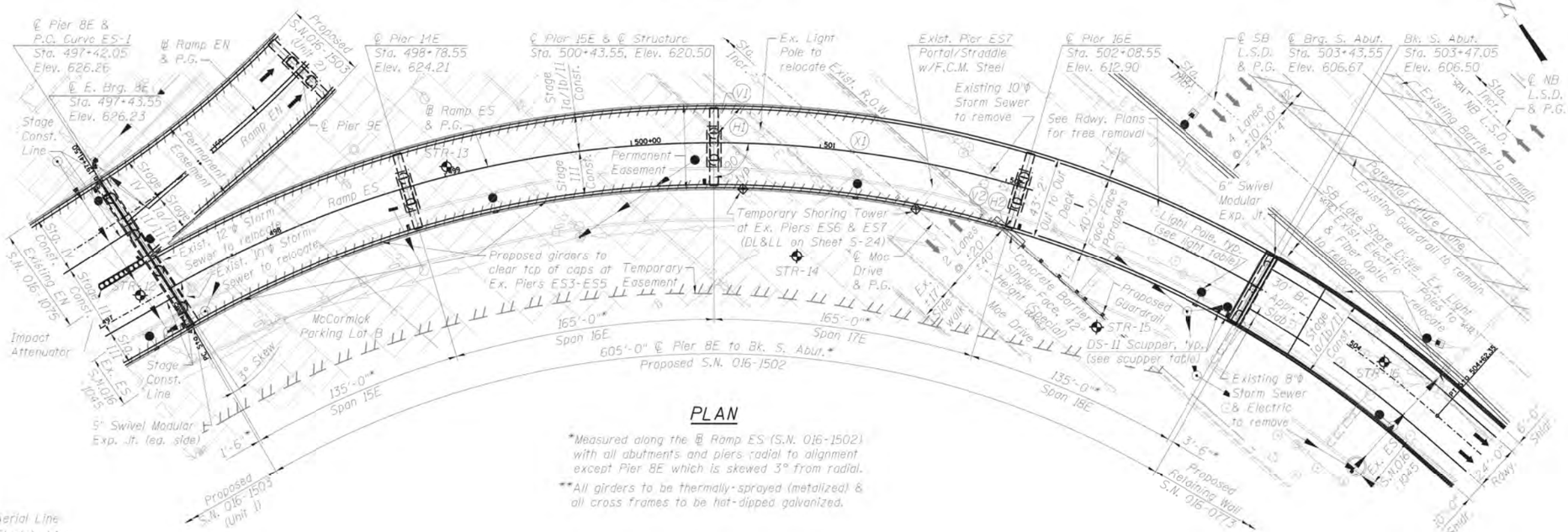

PLAN

*Measured along the ℄ Ramp ES (S.N. 016-1502) with all abutments and piers radial to alignment except Pier 8E which is skewed 3° from radial.

**All girders to be thermally-sprayed (metalized) & all cross frames to be hot-dipped galvanized.

LEGEND

- Exist. Aerial Line
- Exist. Electric Line
- Exist. Fence
- Exist. Fiber Optic Line
- Exist. Gas Line
- Exist. Guardrail
- Exist. Storm Sewer
- Exist. Water Line
- STR-12 Soil Boring Location

STATION EQUATION TABLE

Sta. Eqn.	Upper Roadway Alignment	Upper Roadway Station	Lower Roadway Alignment	Lower Roadway Station
X1	℄ Ramp ES	501+16.91	℄ Moe Dr.	71+38.23

MODEL: Default
FILE NAME: pw:\\uilanroom.dot.illinois.gov:PWIDOT\Documents\IDOT Offices\District 1\Projects\D132320\CADData\Design\D132320-eixrdge.dgn

USER NAME = diazia	DESIGNED -	REVISED -
	DRAWN -	REVISED -
PLOT SCALE = 100.0000 ' / in.	CHECKED -	REVISED -
PLOT DATE = 12/6/2019	DATE -	REVISED -

STATE OF ILLINOIS
DEPARTMENT OF TRANSPORTATION

EXISTING GENERAL PLAN
SN: 016-1502

SCALE: SHEET OF SHEETS STA. TO STA.

VAR. RTE.	SECTION	COUNTY	TOTAL SHEETS	SHEET NO.
VAR.	2019-155-BR	VARIOUS	107	24

CONTRACT NO. 62K32

ILLINOIS FED. AID PROJECT

FOR INFORMATION ONLY

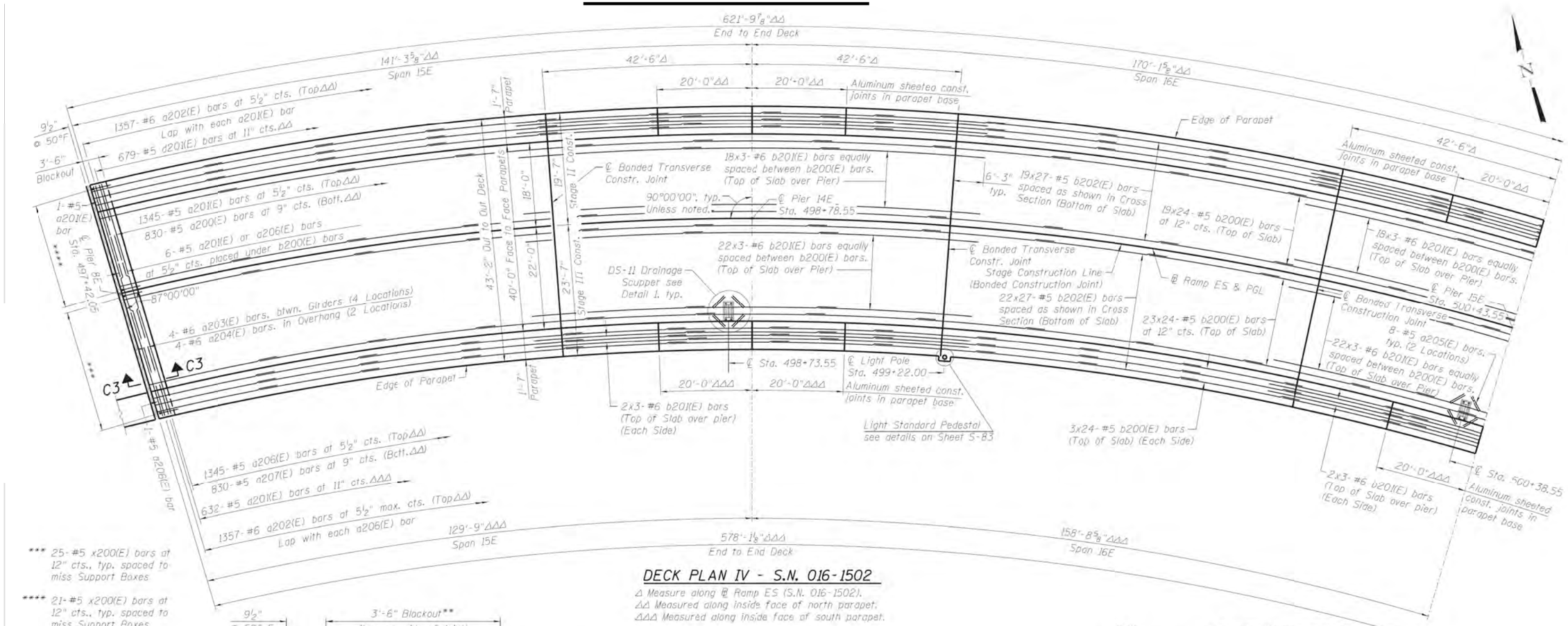

DECK PLAN IV - S.N. 016-1502

Δ Measure along ℄ Ramp ES (S.N. 016-1502).
ΔΔ Measured along inside face of north parapet.
ΔΔΔ Measured along inside face of south parapet.

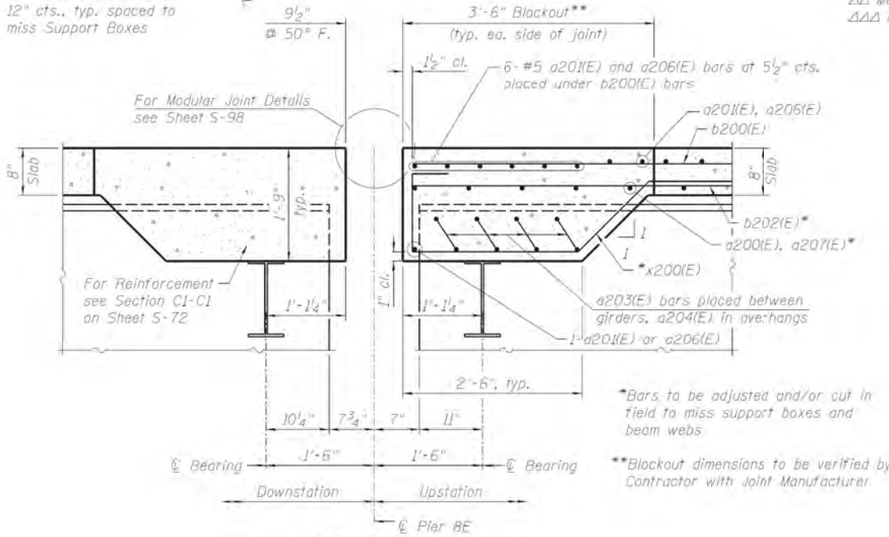

*Bars to be adjusted and/or cut in field to miss support boxes and beam webs

**Blockout dimensions to be verified by Contractor with Joint Manufacturer

SECTION C3-C3

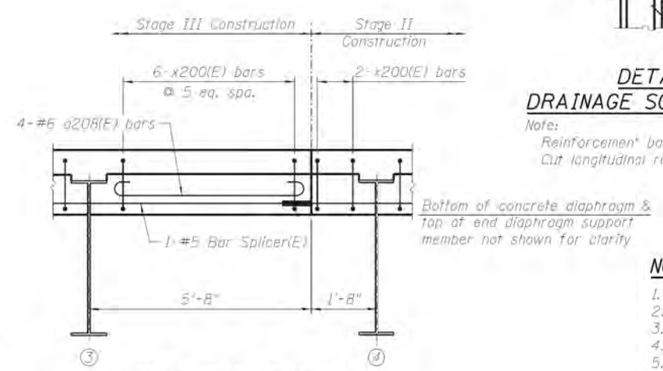

DETAIL @ JOINT @ PIER 8E

Bars in 8" slab not shown for clarity. (Looking West)

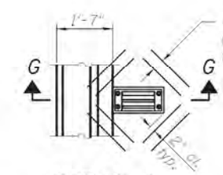

DETAIL 1
DRAINAGE SCUPPER DS-11

Note:
Reinforcement bars designated (E) shall be epoxy coated.
Cut longitudinal reinforcement to clear drainage scuppers.

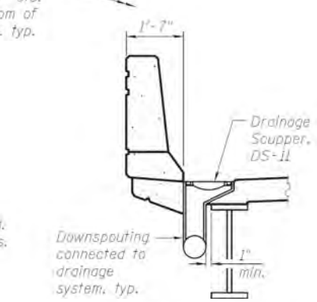

SECTION G-G

NOTES:

1. Stations are along ℄ Ramp ES & PGL unless noted otherwise.
2. Minimum lap for #5 bars shall be 3'-3" and for #6 bars shall be 3'-10".
3. Bars indicated 41x12-#5 etc. indicates 41 lines of bars with 12 lengths per line.
4. Bend longitudinal reinforcement bars as required to fit in the field.
5. See Sheet S-78 for parapet reinforcement.
6. See Sheet S-83 for deck cross section.
7. See Sheet S-83 for Bill of Material.
8. See Sheet S-103 for DS-11 Drainage Scupper.
9. See Sheet S-87 for Deck Pouring Sequence.

MODEL: Default
FILE NAME: pw:\\ubanoom.dot.illinois.gov:PWIDOT\Documents\IDOT Offices\District 1\Projects\D132320\CADData\Design\D132320-eprdge.dgn

USER NAME = diazia	DESIGNED -	REVISED -	STATE OF ILLINOIS DEPARTMENT OF TRANSPORTATION	EXISTING DECK PLAN SN: 016-1502	VAR. RTE.	SECTION	COUNTY	TOTAL SHEETS	SHEET NO.
	DRAWN -	REVISED -			VAR.	2019-155-BR	VARIOUS	107	25
PLOT SCALE = 100.0000 ' / in.	CHECKED -	REVISED -					CONTRACT NO. 62K32		
PLOT DATE = 12/6/2019	DATE -	REVISED -		SCALE: SHEET OF SHEETS STA. TO STA.		ILLINOIS FED. AID PROJECT			

FOR INFORMATION ONLY

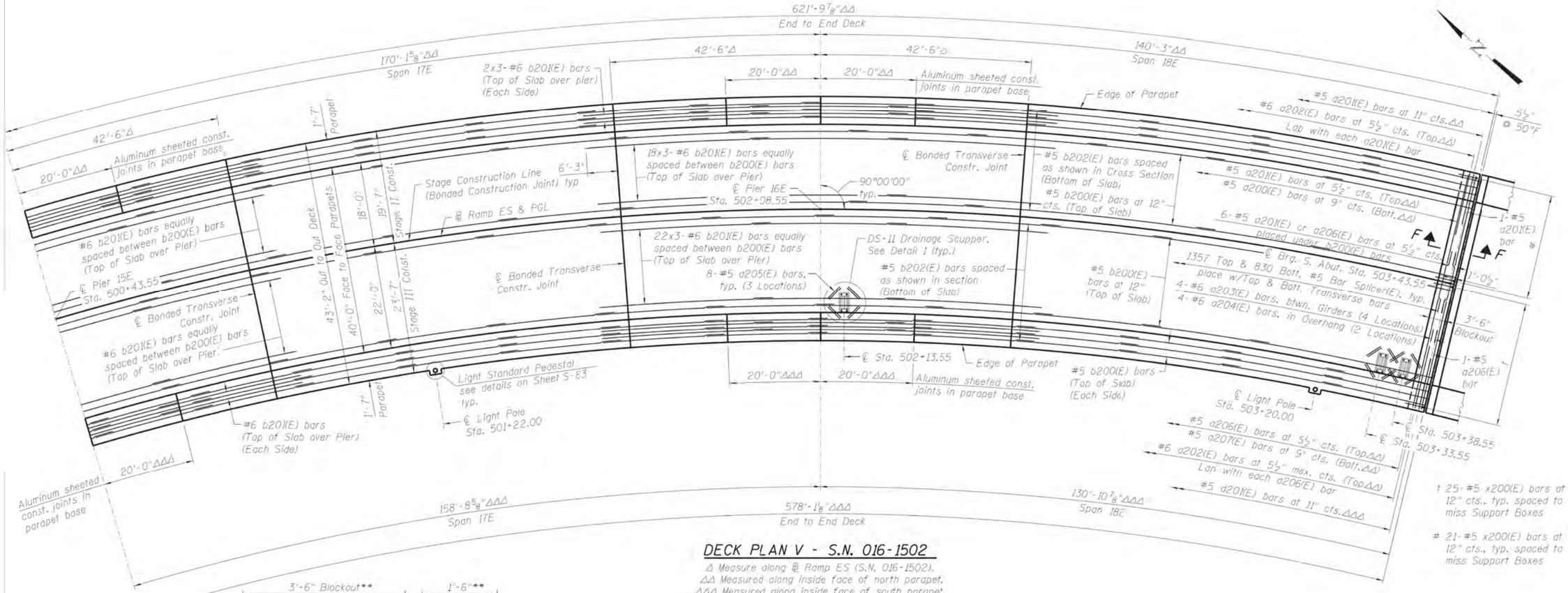

DECK PLAN V - S.N. 016-1502

Δ Measure along ℄ Ramp ES (S.N. 016-1502).
ΔΔ Measured along inside face of north parapet.
ΔΔΔ Measured along inside face of south parapet.

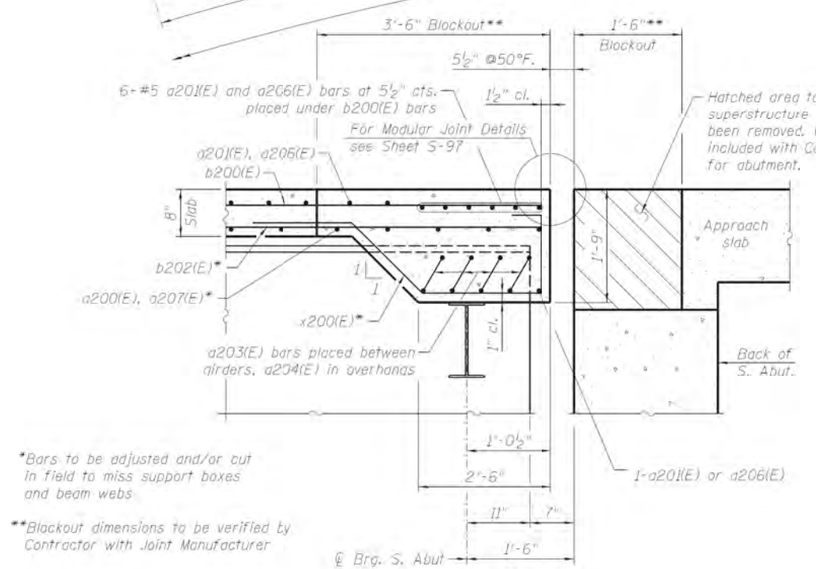

*Bars to be adjusted and/or cut in field to miss support boxes and beam webs

**Blackout dimensions to be verified by Contractor with Joint Manufacturer

SECTION F-F

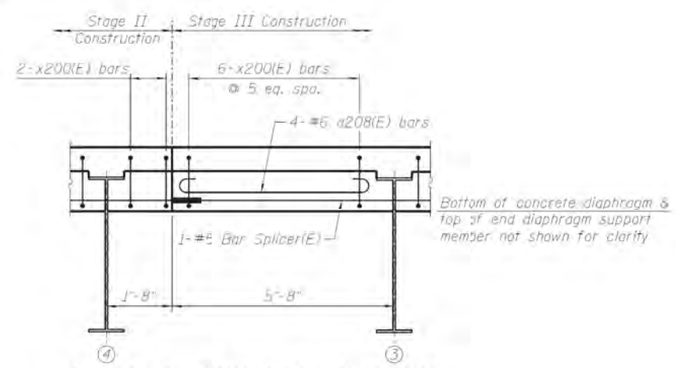

DETAIL @ JOINT @ S. ABUTMENT

Bars in 8" slab not shown for clarity.
(Looking East)

NOTES:

1. Stations are along ℄ Ramp ES & PGL unless noted otherwise.
2. Minimum lap for #5 bars shall be 3'-3" and for #6 bars shall be 3'-10".
3. Bars indicated 41x12-#5 etc. indicates 41 lines of bars with 12 lengths per line.
4. Bend longitudinal reinforcement bars as required to fit in the field.
5. See Sheet S-78 for parapet reinforcement.
6. See Sheet S-83 for deck cross section.
7. See Sheet S-83 for Bill of Material.
8. See Sheet S-69 for Detail 1 and sheet S-103 for DS-11 Drainage Scupper.
9. See Sheet S-87 for Deck Pouring Sequence.

MODEL: Default
FILE NAME: pw:\\ahnroom.dot.illinois.gov:PWIDOT\Documents\IDOT Offices\District 1\Projects\D132320\CADData\Design\D132320-ebridge.dgn

USER NAME = diazia	DESIGNED -	REVISED -	
	DRAWN -	REVISED -	
PLOT SCALE = 100.0000 ' / in.	CHECKED -	REVISED -	
PLOT DATE = 12/6/2019	DATE -	REVISED -	

STATE OF ILLINOIS
DEPARTMENT OF TRANSPORTATION

EXISTING DECK PLAN
SN: 016-1502

SCALE: | SHEET OF SHEETS | STA. TO STA.

VAR. RTE.	SECTION	COUNTY	TOTAL SHEETS	SHEET NO.
VAR.	2019-155-BR	VARIOUS	107	26
		CONTRACT NO. 62K32		
		ILLINOIS	FED. AID PROJECT	

FOR INFORMATION ONLY

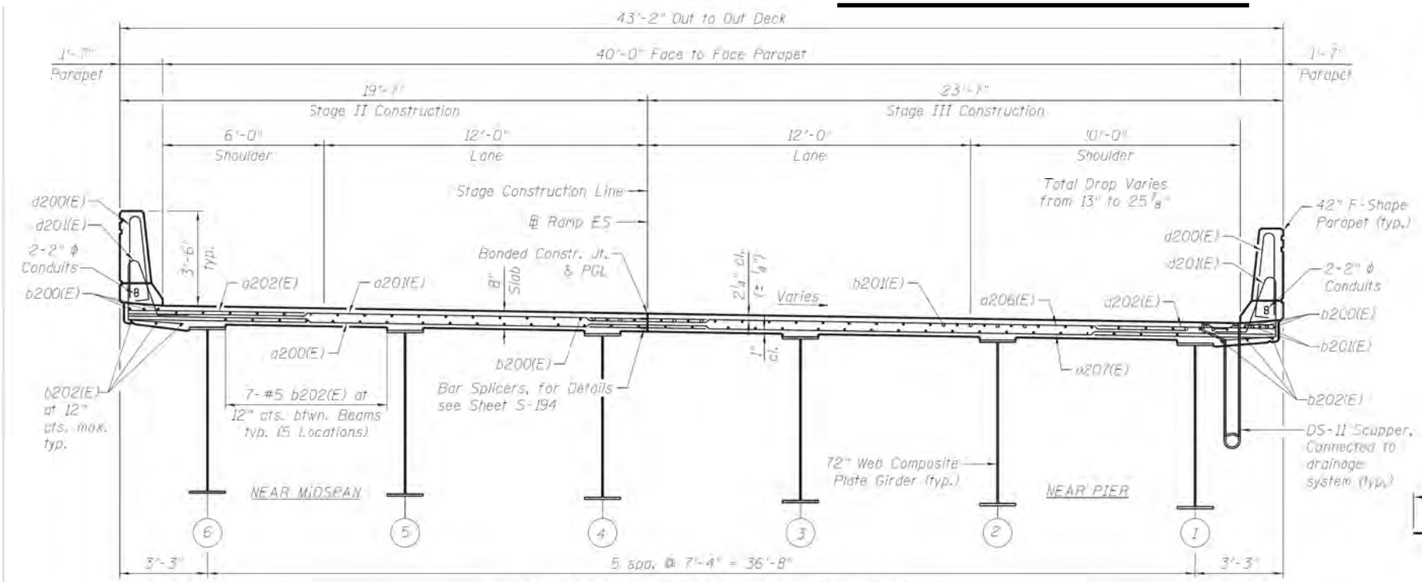

DECK CROSS SECTION - S.N. 016-1502

(Looking East)

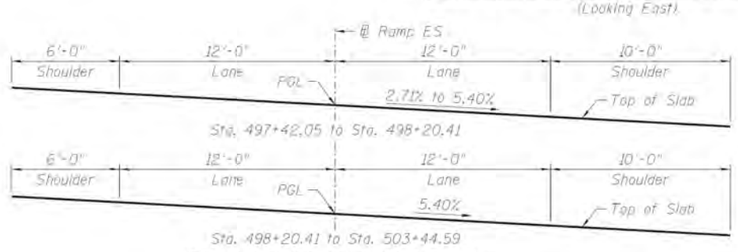

DECK CROSS SLOPE DETAIL

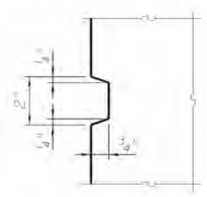

REVEAL DETAIL

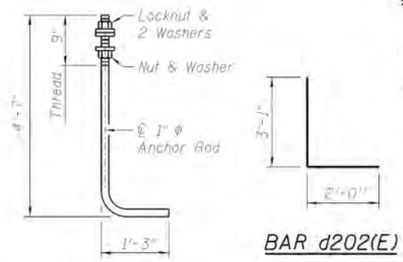

ANCHOR ROD

Diameter as specified for light poles. (ASTM F 1554 Grade 105) Full Length Hot Dipped Galvanized.

BAR d202(E)

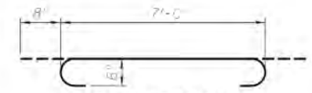

BAR a203(E)

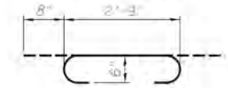

BAR a204(E)

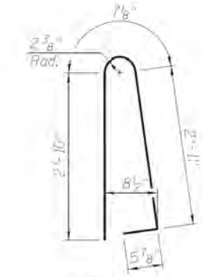

BAR d200(E)

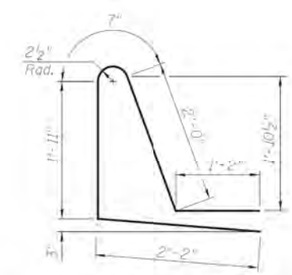

BAR d201(E)

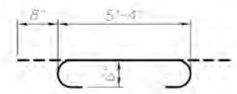

BAR a208(E)

BAR d203(E)

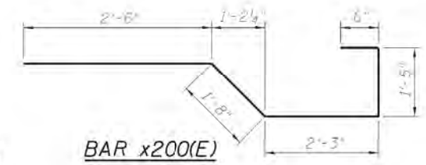

BAR x200(E)

SUPERSTRUCTURE BILL OF MATERIAL S.N. 016-1502

Bar	No.	Size	Length	Shape
a200(E)	830	#5	19'-3"	
a201(E)	1359	#5	19'-3"	
a202(E)	2714	#6	6'-7"	
a203(E)	32	#6	8'-4"	
a204(E)	16	#6	4'-1"	
a205(E)	40	#5	1'-6"	
a206(E)	1359	#5	23'-3"	
a207(E)	830	#5	23'-3"	
a208(E)	8	#6	6'-8"	
b200(E)	1152	#5	29'-1"	
b201(E)	396	#6	35'-1"	
b202(E)	1107	#5	26'-2"	
d200(E)	1471	#5	6'-10"	
d201(E)	1311	#5	7'-10"	
d202(E)	9	#6	5'-1"	
d203(E)	18	#6	8'-9"	
e200(E)	96	#4	19'-8"	
e201(E)	91	#4	17'-0"	
e202(E)	98	#4	18'-4"	
e203(E)	7	#4	16'-0"	
e204(E)	4	#4	32'-0"	
e205(E)	10	#4	27'-7"	
e206(E)	4	#4	31'-6"	
e207(E)	4	#8	34'-3"	
e208(E)	12	#8	19'-8"	
e209(E)	10	#8	30'-2"	
e210(E)	4	#8	34'-0"	
e211(E)	7	#4	18'-1"	
e212(E)	84	#4	16'-8"	
e213(E)	14	#4	16'-5"	
e214(E)	70	#4	18'-2"	
e215(E)	7	#4	16'-11"	
e216(E)	4	#4	29'-2"	
e217(E)	10	#4	25'-4"	
e218(E)	4	#4	28'-10"	
e219(E)	4	#8	31'-6"	
e220(E)	10	#8	27'-10"	
e221(E)	4	#8	31'-3"	
x200(E)	92	#5	8'-4"	
Reinforcement Bars, Epoxy Coated		Pound	242,770	
Concrete Superstructure		Cu. Yd.	876.6	
Bridge Deck Grooving (Longitudinal)		Sq. Yd.	2,534	
Protective Coat		Sq. Yd.	3271	

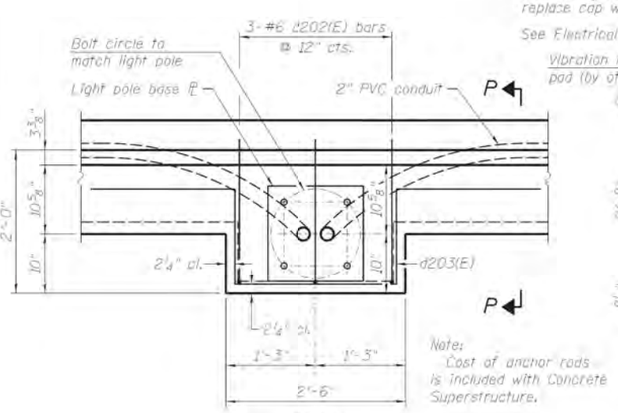

PLAN

LIGHT POLE MOUNTED ON PARAPET

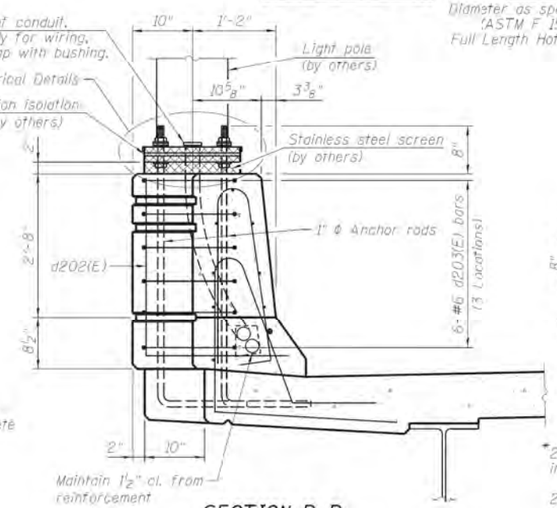

SECTION P-P

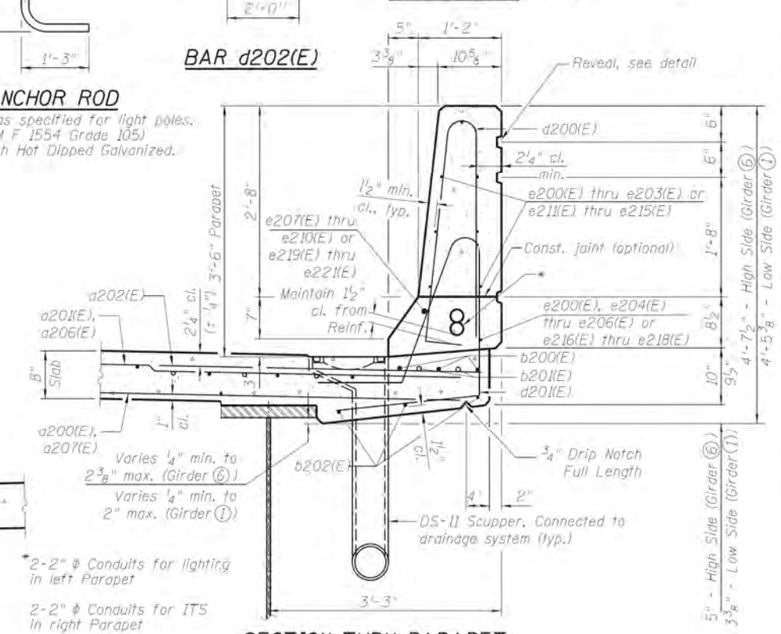

SECTION THRU PARAPET

MODEL: Default
FILE NAME: pw:\\uiserver.dot.illinois.gov:PWIDOT\Documents\IDOT Offices\District 1\Projects\D132320\CADData\Design\D132320-eturbridge.dgn

USER NAME = diazia	DESIGNED -	REVISED -	
	DRAWN -	REVISED -	
PLOT SCALE = 100.0000 ' / in.	CHECKED -	REVISED -	
PLOT DATE = 12/6/2019	DATE -	REVISED -	

STATE OF ILLINOIS
DEPARTMENT OF TRANSPORTATION

EXISTING CROSS SECTION
SN: 016-1502

SCALE: | SHEET OF SHEETS | STA. TO STA.

VAR. RTE.	SECTION	COUNTY	TOTAL SHEETS	SHEET NO.
VAR.	2019-155-BR	VARIOUS	107	27
		CONTRACT NO. 62K32		
		ILLINOIS	FED. AID PROJECT	

FOR INFORMATION ONLY

Bench Mark: BM 4, chiseled square on NE corner of crashwall at existing Pier E20, just East of Moe Drive, on existing S.N. 016-1075 carrying NB I-55 to NB L.S.D., Elev. 594.65 (NAVD 88).

Existing Structure: (no salvaging) S.N. 016-1075 was built in 1965 & carries NB I-55 traffic to NB Lake Shore Drive over McCormick Place Busway, Metra Electric RR, ICRR, Moe Drive, & Lake Shore Drive. The 1325'-10" long structure has 13-spans of 81.08', 123.80', 86.01', 105.52', 74.25', 74.17', 75.36', 81.83', 84.71', 95.87', 88.03', 164.74', & 62.63' ending with 127'-10" north terminal structure. The out-to-out deck width varies from 76' to 83'-1" (Span 1), varies from 59'-7" to 43'-7" (Spans 2-9), and is a constant 43'-7" (Spans 10-13). The structure uses 54" steel plate girders (Spans 1-4), 48" steel plate girders (Spans 5-11 & 13), & 66" steel plate girders (Span 12) composite with a 7.5" concrete deck. All substructures use 3-6 column concrete piers & concrete caissons drilled into rock. It was rehabilitated in 1975 (deck repair, exp. joint replacement, & steel repainting), 1990 (bearing replacement), 1994 (deck repair, exp. joint replacement, & pier repair), 1996 (pier repair), 2002 (steel repainting), 2005 (pier repair), and 2008 (deck repair).

Traffic Control: For Stage Ia, maintain 2-lanes of EN traffic on north & west halves of existing S.N. 016-1075 & 1-lane exit for ES traffic during construction of south half of Spans 1E-3E of proposed S.N. 016-1500, south half of Spans 9E-10E of proposed S.N. 016-1503 (Unit 2), Spans 11E-14E of proposed S.N. 016-1503 (Unit 3), north & east halves of Spans 15E-18E of proposed S.N. 016-1502, & gore widening of existing S.N. 016-1075. For Stage Ib, continue prior EN traffic & shift 1-lane of ES traffic east to gore widening of existing S.N. 016-1075 for construction of south half of Spans 4E-5E of proposed S.N. 016-1500 & temporary bridge from proposed S.N. 016-1500 to existing S.N. 016-1045. For Stage II, continue prior EN traffic & shift 1-lane of ES traffic to temporary bridge during construction of center 1/3 of Spans 6E-8E of proposed S.N. 016-1503 (Unit 1). For Stage III, keep prior EN traffic & shift 1-lane of ES traffic to center 1/3 of proposed S.N. 016-1503 (Unit 1) for construction of south 1/3 of Spans 6E-8E of proposed S.N. 016-1503 (Unit 1) & south & west halves of Spans 15E-18E of proposed S.N. 016-1502. For Stage IV, reduce EN traffic to 1-lane & shift to center 1/3 of proposed S.N. 016-1503 (Unit 1) & south & east halves of S.N. 016-1503 (Units 2-3) and increase ES traffic to 2-lanes on south 1/3 of S.N. 016-1503 (Unit 1) for construction of north half of Spans 1E-5E of proposed S.N. 016-1500, north 1/3 of Spans 6E-8E of proposed S.N. 016-1503 (Unit 1), & north half of Spans 9E-10E of proposed S.N. 016-1503 (Unit 2). Temporary lane closures may be required for McCormick Place Busway, Moe Drive, & Lake Shore Drive with temporary RR track closures for Metra Electric & Illinois Central RR.

Note:
No freefall deck drains will be permitted in span over tracks.

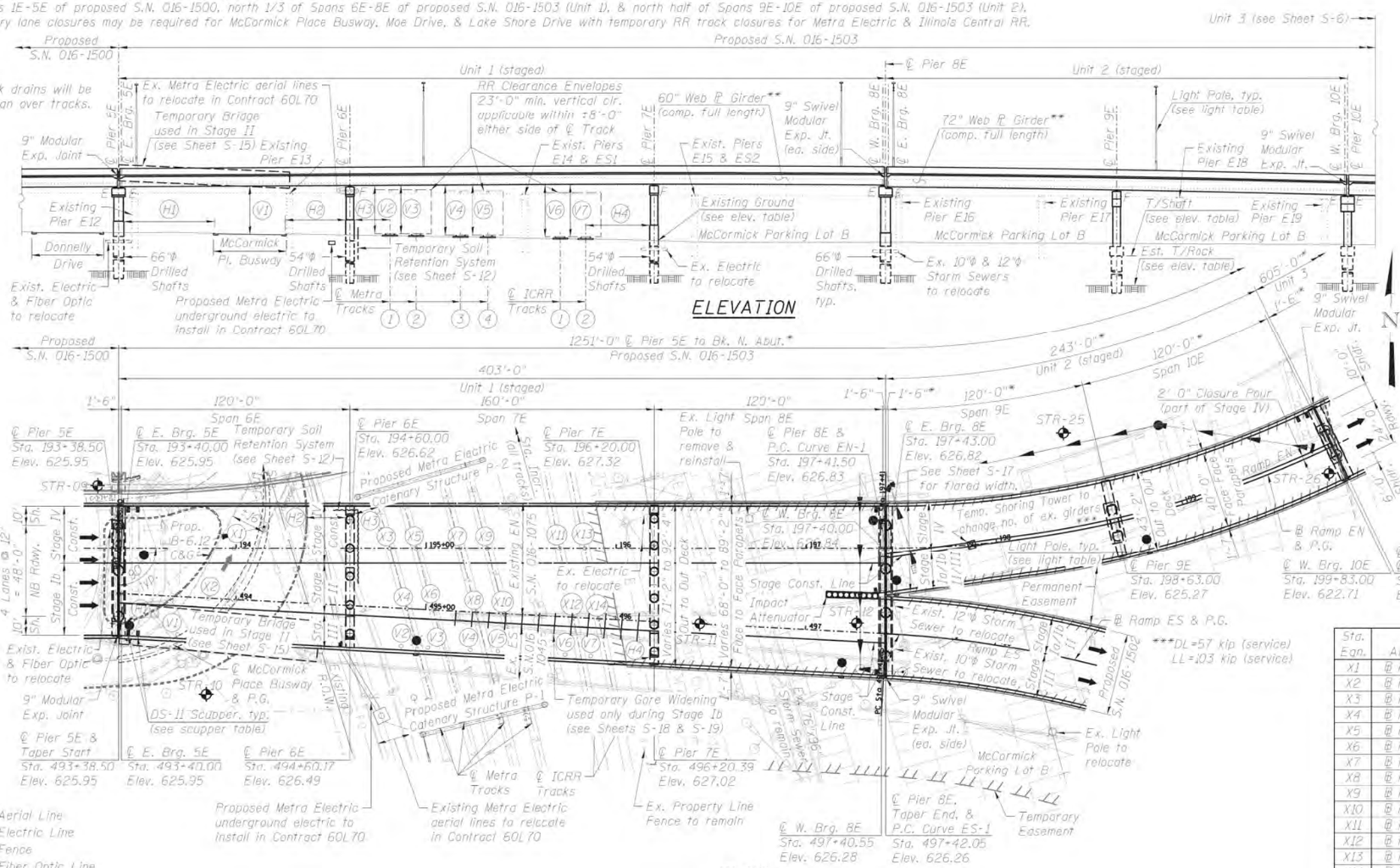

*Measured along the ℄ Ramp EN (S.N. 016-1503) with all abutments and piers radial to alignment.

**All girders to be thermally-sprayed (metalized) & all cross frames to be hot-dipped galvanized.

MIN CLEARANCE TABLE

Horizontal		Vertical		Horizontal		Vertical	
H1	1'-8"	V1	23'-10"	H8	53'-7"	V8	22'-10"
H2	21'-1"	V2	27'-7"	H9	41'-7"	V9	15'-4"
H3	13'-2"	V3	27'-11"	H10	8'-7"	V10	15'-4"
H4	22'-5"	V4	28'-6"	H11	20'-7"	V11	15'-1"
H5	16'-8"	V5	28'-4"	H12	25'-10"	V12	18'-11"
H6	61'-6"	V6	29'-0"	H13	13'-10"	V13	17'-11"
H7	26'-4"	V7	29'-2"	H14	11"	V14	17'-5"

DS-11 SCUPPER TABLE

ID	Station	Offset
1	193+43.50	22'-0" (Lt.)
2	493+43.50	22'-0" (Rt.)
3	193+48.50	22'-0" (Lt.)
4	493+48.50	22'-0" (Rt.)
5	494+55.17	22'-0" (Rt.)
6	197+36.50	22'-0" (Lt.)
7	197+36.50	24'-0" (Rt.)
8	497+37.05	22'-0" (Rt.)
9	199+74.50	22'-0" (Lt.)
10	199+79.50	22'-0" (Lt.)
11	201+16.00	22'-0" (Lt.)
12	202+91.00	22'-0" (Lt.)
13	204+56.00	22'-0" (Lt.)
14	205+76.00	22'-0" (Lt.)
15	205+81.00	22'-0" (Lt.)

LIGHT PEDESTAL TABLE

ID	Station	Offset
AH1	493+45.00	23'-7" (Rt.)
AG2	494+96.00	23'-7" (Rt.)
AH2	497+20.00	23'-7" (Rt.)
AE1	197+47.00	24'-5" (Rt.)
AF1	198+77.00	19'-7" (Rt.)
AE2	200+73.00	19'-7" (Rt.)
AF2	202+76.00	19'-7" (Rt.)
AE3	204+76.00	19'-7" (Rt.)

Aluminum light poles have a 10"Φ (15"Φ bolt circle), possess height of 45', support 6-8' mast arms, & are mounted on the parapets.

EXISTING GROUND, TOP OF SHAFT, & BEDROCK ELEVATION TABLE

Pier	NW. T/Gr.	SE. T/Gr.	T/Shaft	T/Rock
5E	596.20	596.60	595.00	529.25
6E	591.20	591.70	588.50	529.25
7E	590.85	591.05	588.50	521.25
8E	590.65	590.70	588.50	518.50
9E	590.35	590.45	585.00	521.75
10E	590.60	590.85	585.00	523.25
11E	592.85	592.75	587.50	523.25
12E	588.00	587.20	580.00	521.25
13E	586.90	590.60	580.00	521.25
N.Ab.	N/A	N/A	596.20	519.75

STATION EQUATION TABLE

Sta. Eqn.	Upper Roadway Alignment	Upper Roadway Station	Lower Roadway Alignment	Lower Roadway Station
X1	ℙ Ramp EN	193+98.98	℄ Busway	30+90.05
X2	ℙ Ramp ES	493+85.57	℄ Busway	30+60.34
X3	ℙ Ramp EN	194+80.96	℄ Metra 1	35+94.38
X4	ℙ Ramp ES	494+89.92	℄ Metra 1	35+61.28
X5	ℙ Ramp EN	194+94.65	℄ Metra 2	40+94.85
X6	ℙ Ramp ES	495+03.92	℄ Metra 2	40+60.96
X7	ℙ Ramp EN	195+17.84	℄ Metra 3	45+94.83
X8	ℙ Ramp ES	495+26.62	℄ Metra 3	45+59.93
X9	ℙ Ramp EN	195+32.10	℄ Metra 4	50+95.25
X10	ℙ Ramp ES	495+41.13	℄ Metra 4	50+59.56
X11	ℙ Ramp EN	195+70.38	℄ ICRR 1	55+95.00
X12	ℙ Ramp ES	495+77.85	℄ ICRR 1	55+57.78
X13	ℙ Ramp EN	195+83.61	℄ ICRR 2	60+95.36
X14	ℙ Ramp ES	495+91.24	℄ ICRR 2	60+57.43
X15	ℙ Ramp EN	200+27.04	℄ Moe Dr.	74+01.49
X16	ℙ Ramp EN	201+81.43	℄ SB L.S.D	2114+34.68
X17	ℙ Ramp NW	401+89.62	ℙ Ramp EN	202+15.77
X18	ℙ Ramp EN	203+60.59	℄ NB L.S.D	1115+62.78

RR Mile Post 2.9 applicable to all RR tracks for Metra & ICRR.

LEGEND

- —A—A— Exist. Aerial Line
- —E—E— Exist. Electric Line
- —X—X— Exist. Fence
- —FO—FO— Exist. Fiber Optic Line
- —G—G— Exist. Gas Line
- Exist. Guardrail
- Exist. Storm Sewer
- —W—W— Exist. Water Line
- STR-09 Soil Boring Location

MODEL: Default
FILE NAME: pw:\\dbarroom.dot.illinois.gov:PWIDOT\Documents\IDOT Offices\District 1\Projects\D132320\CADData\DesignD132320-eGirdge.dgn

USER NAME = diazia	DESIGNED -	REVISED -	
	DRAWN -	REVISED -	
PLOT SCALE = 100.0000 ' / in.	CHECKED -	REVISED -	
PLOT DATE = 12/6/2019	DATE -	REVISED -	

STATE OF ILLINOIS
DEPARTMENT OF TRANSPORTATION

EXISTING GENERAL PLAN
SN: 016-1503

SCALE: SHEET OF SHEETS STA. TO STA.

VAR. RTE.	SECTION	COUNTY	TOTAL SHEETS	SHEET NO.
VAR.	2019-155-BR	VARIOUS	107	28
		CONTRACT NO. 62K32		
		ILLINOIS FED. AID PROJECT		

FOR INFORMATION ONLY

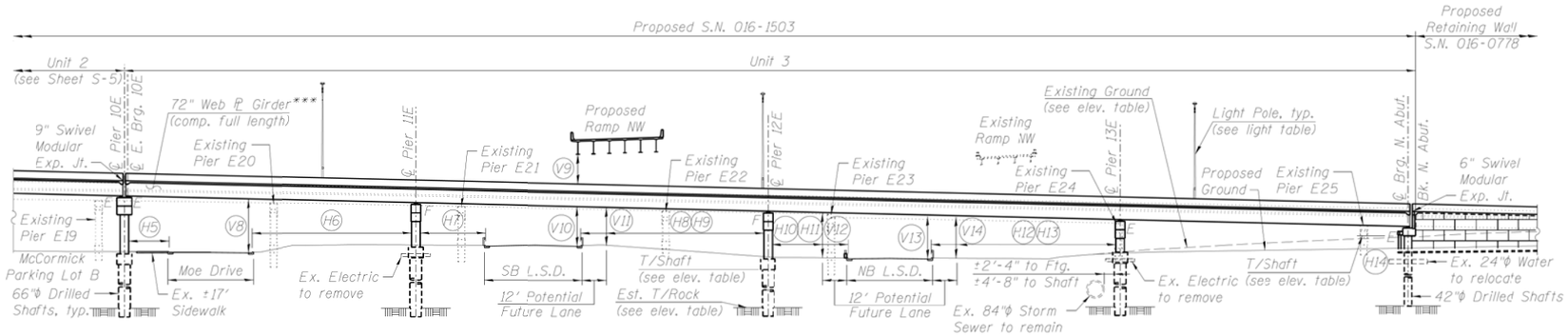

ELEVATION

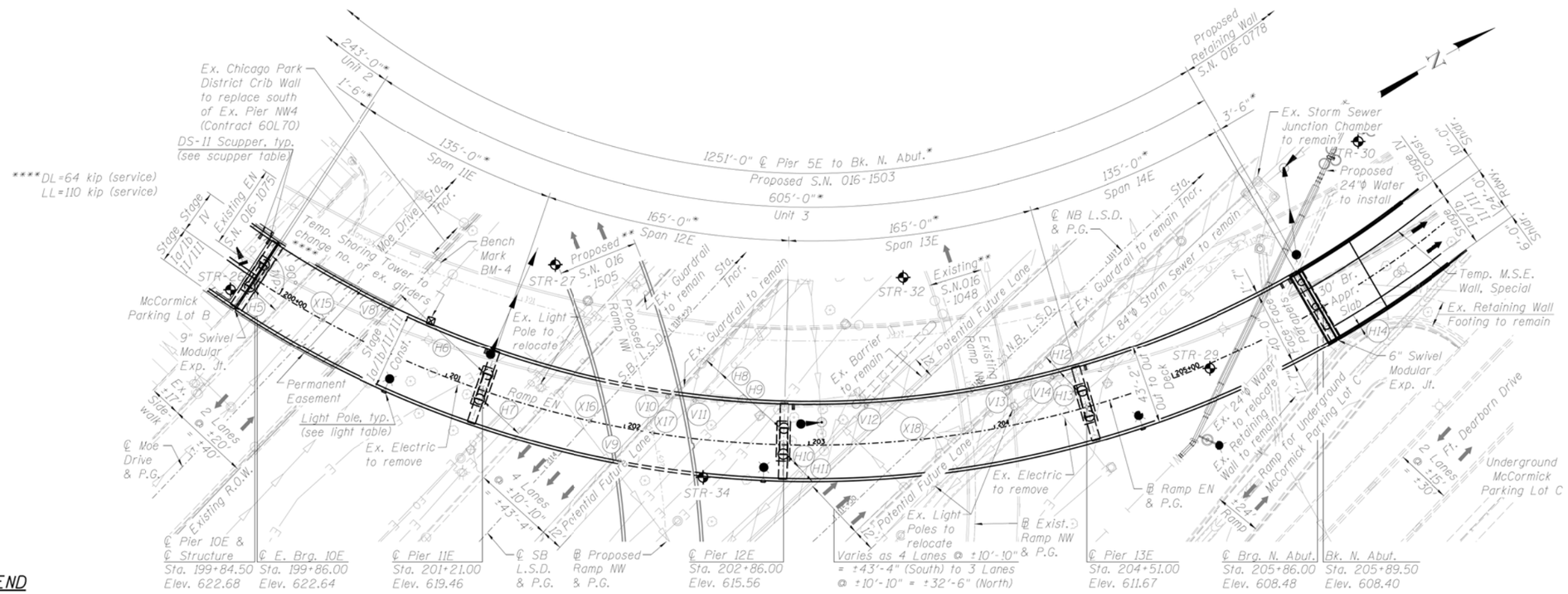

PLAN

*Measured along the ℄ Ramp EN (S.N. 016-1503) with all abutments and piers radial to alignment.

**Existing S.N. 016-1048 (Ramp NW) to be replaced by proposed S.N. 016-1505 with Contract 60L70.

***All girders to be thermally-sprayed (metalized) & all cross frames to be hot-dipped galvanized.

LEGEND

—A—A—	Exist. Aerial Line
—E—E—	Exist. Electric Line
—X—X—	Exist. Fence
—FO—FO—	Exist. Fiber Optic Line
—G—G—	Exist. Gas Line
	Exist. Guardrail
	Exist. Storm Sewer
—W—W—	Exist. Water Line
STR-09	Soil Boring Location

MODEL: Default
FILE NAME: pw:\\pwnaperum.dot.illinois.gov:PWIDOT\Documents\IDOT Offices\District 1\Projects\D132320\CADData\Design\D132320-ExtRdge.dgn

USER NAME = diazia	DESIGNED -	REVISED -	
	DRAWN -	REVISED -	
PLOT SCALE = 100.0000 ' / in.	CHECKED -	REVISED -	
PLOT DATE = 12/6/2019	DATE -	REVISED -	

STATE OF ILLINOIS
DEPARTMENT OF TRANSPORTATION

EXISTING GENERAL PLAN
SN: 016-1503

SCALE: | SHEET OF SHEETS | STA. TO STA.

VAR. RTE.	SECTION	COUNTY	TOTAL SHEETS	SHEET NO.
VAR.	2019-155-BR	VARIOUS	107	29
		CONTRACT NO. 62K32		
	ILLINOIS	FED. AID PROJECT		

FOR INFORMATION ONLY

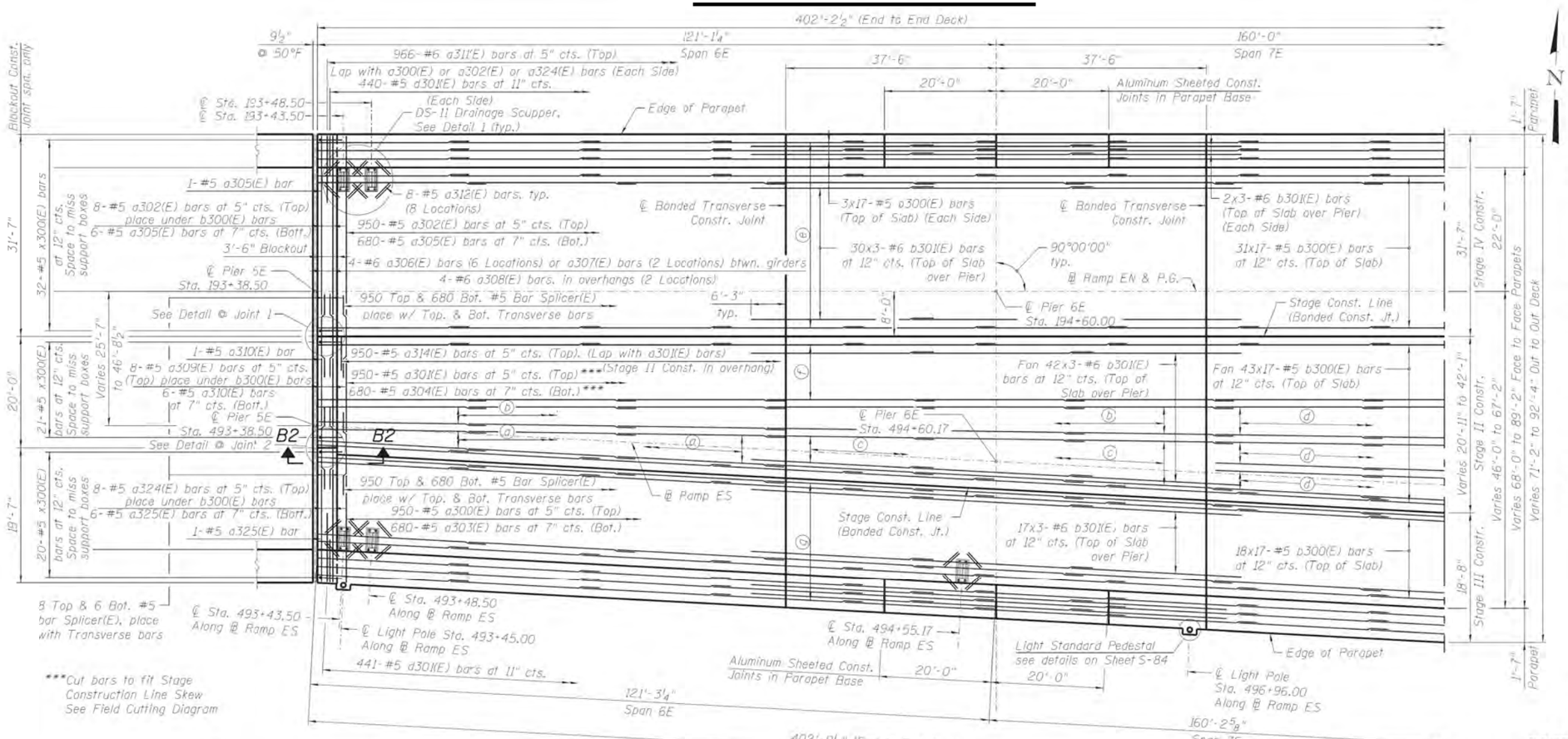

DECK PLAN VI - S.N. 016-1503 (UNIT 1)

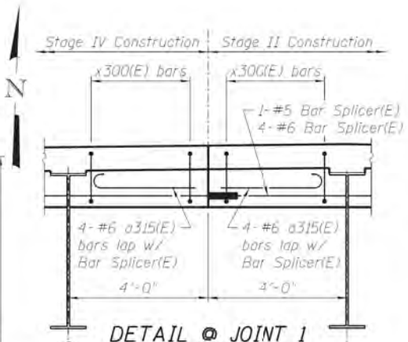

DETAIL @ JOINT 1

Bottom of concrete diaphragm & top of end diaphragm support member not shown for clarity. Bars in 8" slab not shown for clarity.

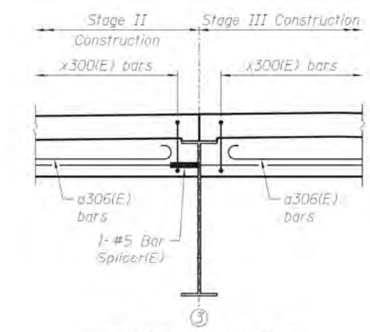

DETAIL @ JOINT 2

Bottom of concrete diaphragm & top of end diaphragm support member not shown for clarity. Bars in 8" slab not shown for clarity.

BOTTOM LONGITUDINAL BARS

- ⓐ Fan 8x3-#5 b302(E) bars at 10" cts. max. (Bottom of Slab)
- ⓑ Fan 7x6-#5 b302(E) bars at 10" cts. max. (Bottom of Slab)
- ⓒ Fan 12x3-#5 b302(E) bars at 10" cts. max. (Bottom of Slab)
- ⓓ Fan 11x9-#5 b302(E) bars at 10" cts. max. (Bottom of Slab)
- ⓔ 34x15-#5 b302(E) bars at 10" cts. max. (Bottom of Slab)
- ⓕ 14x15-#5 b302(E) bars at 10" cts. max. (Bottom of Slab)
- ⓖ 21x15-#5 b302(E) bars at 10" cts. max. (Bottom of Slab)

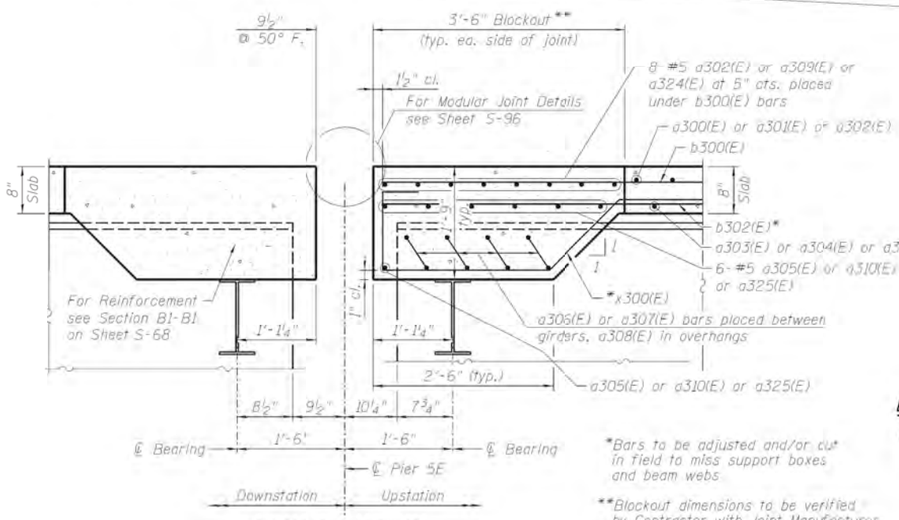

SECTION B2-B2

*Bars to be adjusted and/or cut in field to miss support boxes and beam webs

**Blockout dimensions to be verified by Contractor with Joint Manufacturer

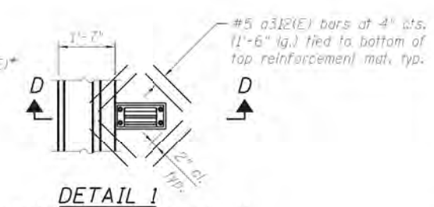

DETAIL 1
DRAINAGE SCUPPER DS-11

Note:
Reinforcement bars designated (E) shall be epoxy coated.
Cut longitudinal reinforcement to clear drainage scuppers.

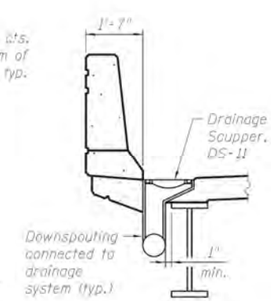

SECTION D-D

NOTES:

1. Stations are along ℄ Ramp EN & PGL unless noted otherwise.
2. Minimum lap for #5 bars shall be 3'-3" and for #6 bars shall be 3'-10".
3. Bars indicated 41x12-#5 etc. indicates 41 lines of bars with 12 lengths per line.
4. Bend longitudinal reinforcement bars as required to fit in the field.
5. See Sheet S-79 for parapet reinforcement.
6. See Sheet S-84 for deck cross section.
7. See Sheet S-84 for Bill of Material.
8. See Sheet S-103 for DS-11 Drainage Scupper.
9. See Sheet S-88 for Deck Pouring Sequence.

MODEL: Default
FILE NAME: pw:\\ulanroom.dot.illinois.gov:PWIDOT\Documents\IDOT Offices\District 1\Projects\D132320\CADData\Design\D132320-eisrdge.dgn

USER NAME = diazla	DESIGNED -	REVISED -	
	DRAWN -	REVISED -	
PLOT SCALE = 100.0000 ' / in.	CHECKED -	REVISED -	
PLOT DATE = 12/6/2019	DATE -	REVISED -	

STATE OF ILLINOIS
DEPARTMENT OF TRANSPORTATION

EXISTING DECK PLAN
SN: 016-1503

SCALE: | SHEET OF SHEETS | STA. TO STA.

VAR. RTE.	SECTION	COUNTY	TOTAL SHEETS	SHEET NO.
VAR.	2019-155-BR	VARIOUS	107	30
		CONTRACT NO. 62K32		
		ILLINOIS FED. AID PROJECT		

FOR INFORMATION ONLY

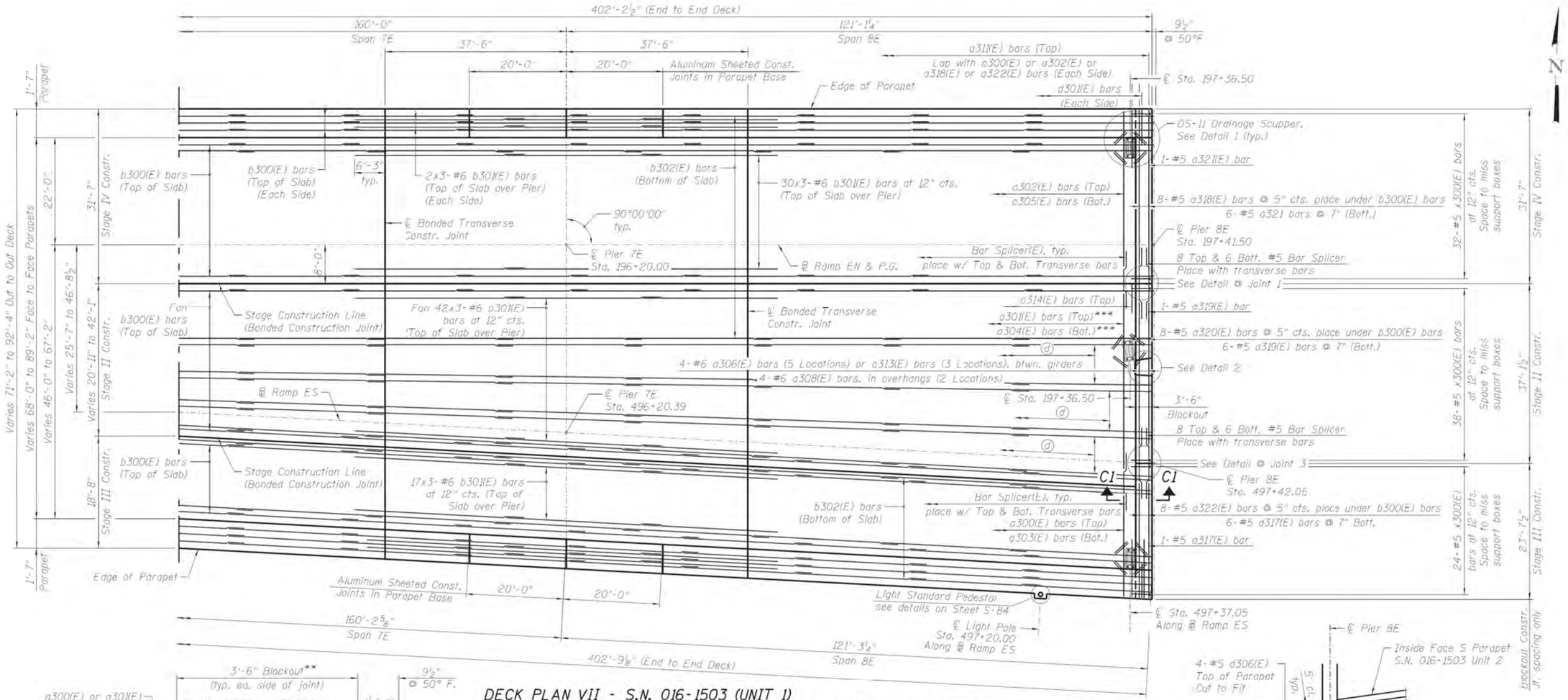

DECK PLAN VII - S.N. 016-1503 (UNIT 1)

*** Cut bars to fit Stage Construction Line Skew. See Field Cutting Diagram.

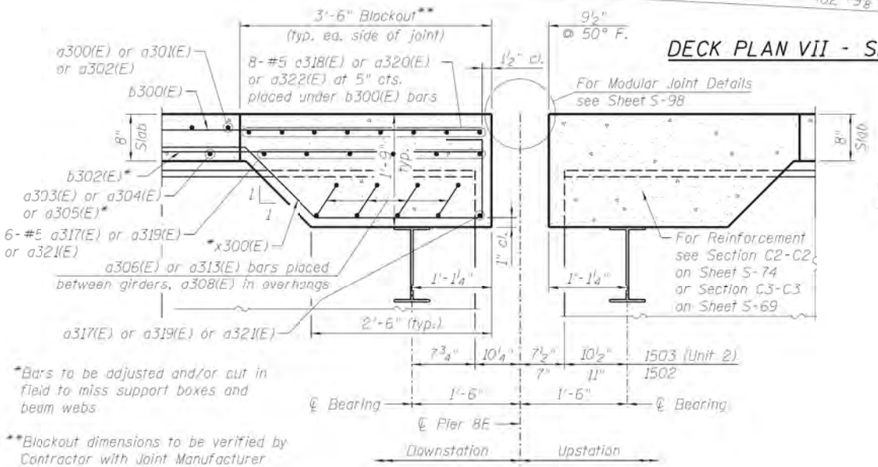

*Bars to be adjusted and/or cut in field to miss support boxes and beam webs

**Blockout dimensions to be verified by Contractor with Joint Manufacturer

SECTION C1-C1

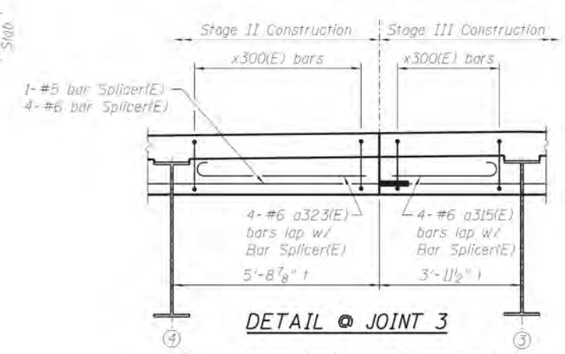

DETAIL @ JOINT 3

Bottom of concrete diaphragm & top of end diaphragm support member not shown for clarity. Bars in 8" slab not shown for clarity.

† Measured along the ℄ of Pier 8E

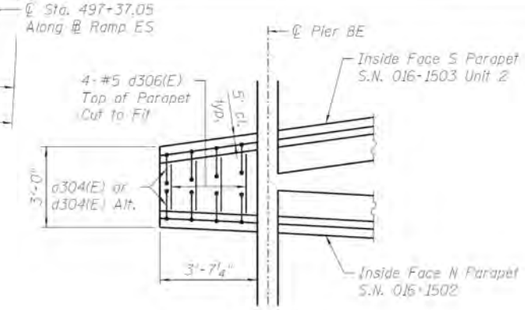

PARAPET END BLOCK DETAIL 2

NOTES:

1. Stations are along ℄ Ramp EN & PGL unless noted otherwise.
2. Minimum lap for #5 bars shall be 3'-3" and for #6 bars shall be 3'-10".
3. Bars indicated 41x12-#5 etc. indicates 41 lines of bars with 12 lengths per line.
4. Bend longitudinal reinforcement bars as required to fit in the field.
5. See Sheet S-79 for parapet reinforcement.
6. See Sheet S-84 for deck cross section.
7. See Sheet S-84 for Bill of Material.
8. See Sheet S-103 for DS-11 Drainage Scupper.
9. See Sheet S-88 for Deck Pouring Sequence.
10. See Sheet S-71 for Detail 1.

MODEL: Default
FILE NAME: pw:\\ildanroom.dot.illinois.gov:PWIDOT\Documents\IDOT Offices\District 1\Projects\D132320\CADData\Design\D132320-deckplan.dgn

USER NAME = diazia	DESIGNED -	REVISED -	
	DRAWN -	REVISED -	
PLOT SCALE = 100.0000 ' / in.	CHECKED -	REVISED -	
PLOT DATE = 12/9/2019	DATE -	REVISED -	

STATE OF ILLINOIS
DEPARTMENT OF TRANSPORTATION

EXISTING DECK PLAN
SN: 016-1503

SCALE: | SHEET OF SHEETS | STA. TO STA.

VAR. RTE.	SECTION	COUNTY	TOTAL SHEETS	SHEET NO.
VAR.	2019-155-BR	VARIOUS	107	31

CONTRACT NO. 62K32

ILLINOIS | FED. AID PROJECT

FOR INFORMATION ONLY

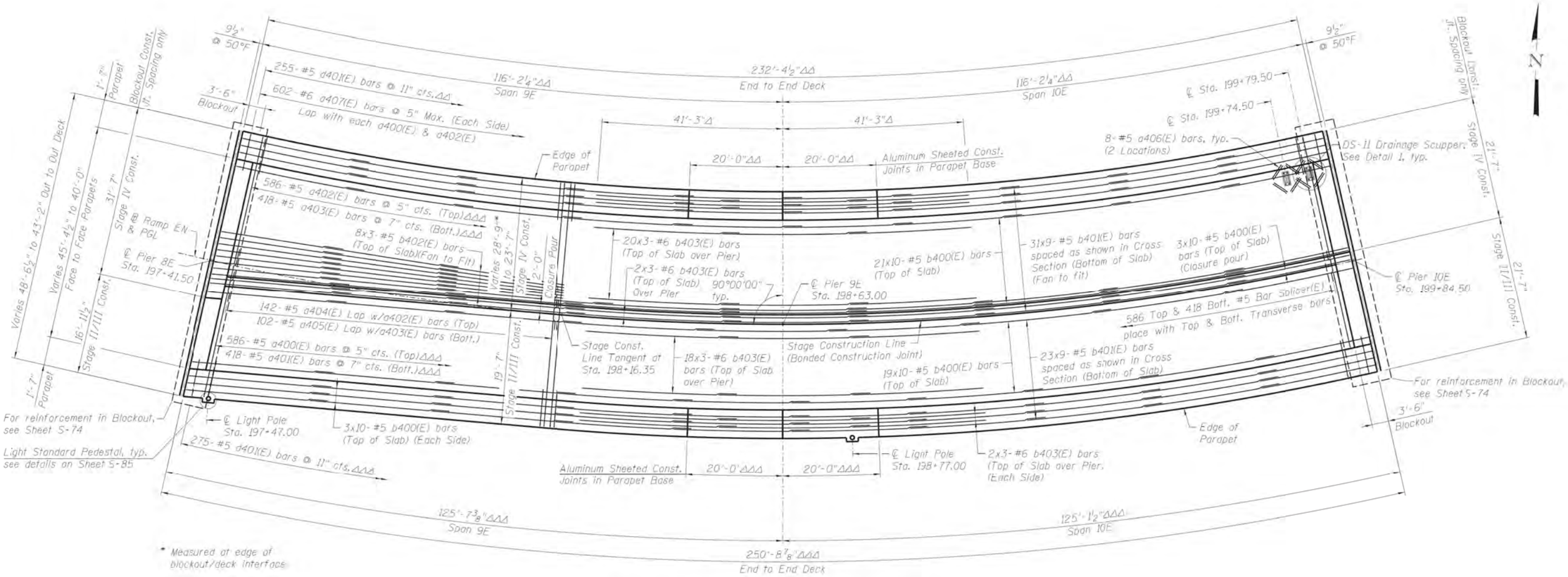

* Measured at edge of blockout/deck interface

DECK PLAN VIII - S.N. 016-1503 (UNIT 2)

Δ Measure along ℄ Ramp EN (S.N. 016-1503).
ΔΔ Measured along inside face of north parapet.
ΔΔΔ Measured along inside face of south parapet.

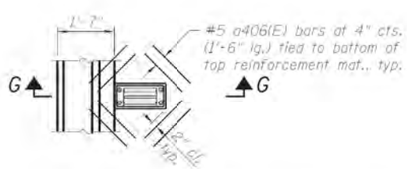

Note:
Reinforcement bars designated (E) shall be epoxy coated.
Cut longitudinal reinforcement to clear drainage scuppers.

DETAIL 1
DRAINAGE SCUPPER DS-11

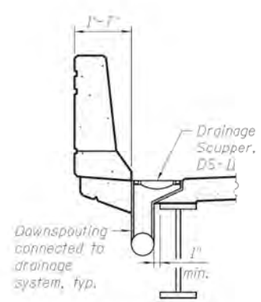

SECTION G-G

NOTES:

1. Stations are along ℄ Ramp EN & PGL unless noted otherwise.
2. Minimum lap for #5 bars shall be 3'-3" and for #6 bars shall be 3'-10".
3. Bars indicated 41x12-#5 etc. indicates 41 lines of bars with 12 lengths per line.
4. Bend longitudinal reinforcement bars as required to fit in the field.
5. See Sheet S-80 for parapet reinforcement.
6. See Sheet S-85 for deck cross section.
7. See Sheet S-85 for Bill of Material.
8. See Sheet S-103 for DS-11 Drainage Scupper.
9. See Sheet S-88 for Deck Pouring Sequence.

MODEL: Default
FILE NAME: pw:\\ulanroom.dot.illinois.gov:PWIDOT\Documents\IDOT Offices\District 1\Projects\D132320\CADData\Design\D132320-eturbridge.dgn

USER NAME = diazla	DESIGNED -	REVISED -	
	DRAWN -	REVISED -	
PLOT SCALE = 100.0000 ' / in.	CHECKED -	REVISED -	
PLOT DATE = 12/6/2019	DATE -	REVISED -	

STATE OF ILLINOIS
DEPARTMENT OF TRANSPORTATION

EXISTING DECK PLAN
SN: 016-1503

SCALE: | SHEET OF SHEETS | STA. TO STA.

VAR. RTE.	SECTION	COUNTY	TOTAL SHEETS	SHEET NO.
VAR.	2019-155-BR	VARIOUS	107	32
		CONTRACT NO. 62K32		
		ILLINOIS	FED. AID PROJECT	

FOR INFORMATION ONLY

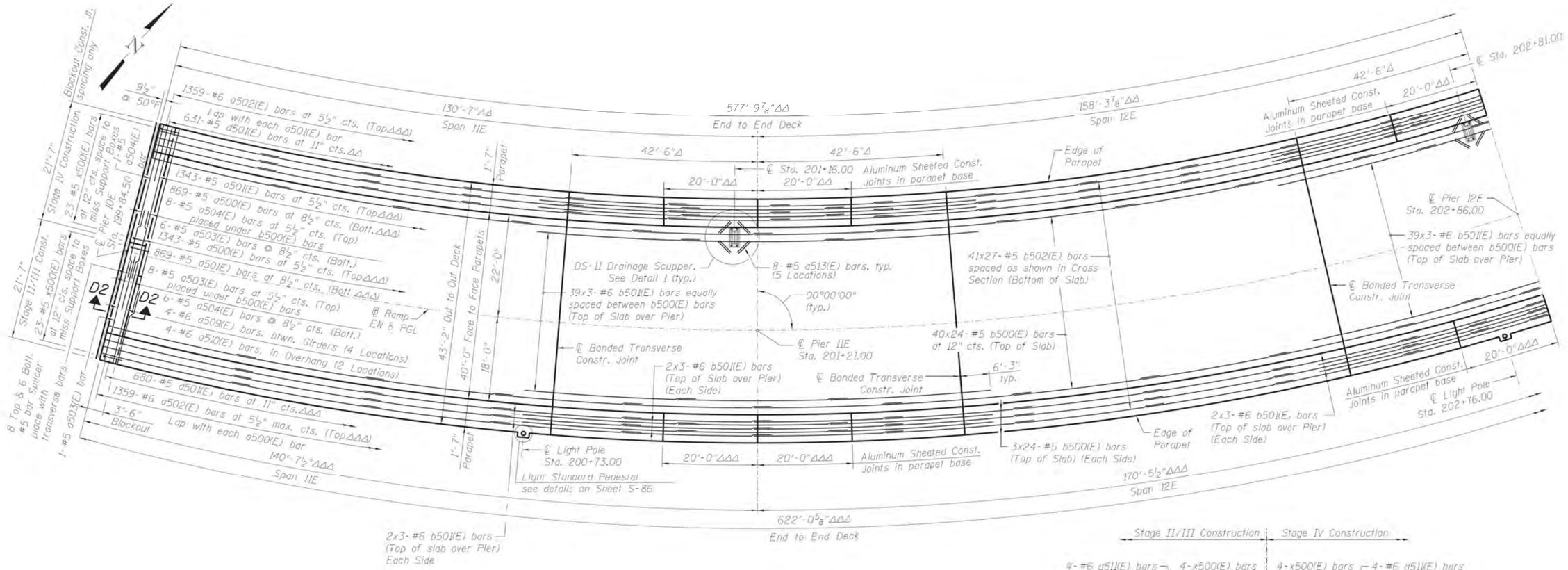

DECK PLAN X - S.N. 016-1503 (UNIT 3)

Δ Measure along ℄ Ramp EN (S.N. 016-1503).
ΔΔ Measured along inside face of west parapet.
ΔΔΔ Measured along inside face of east parapet.

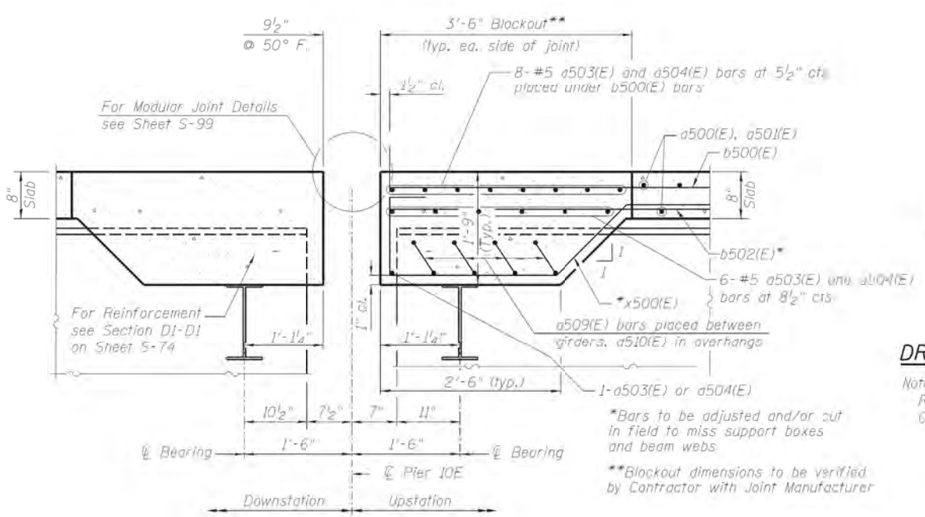

SECTION D2-D2

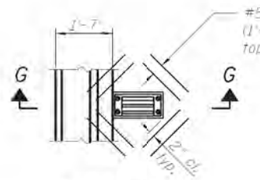

DETAIL 1
DRAINAGE SCUPPER DS-11

Note:
Reinforcement bars designated (E) shall be epoxy coated.
Cut longitudinal reinforcement to clear drainage scuppers.

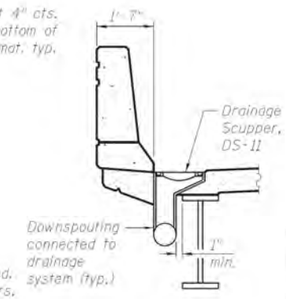

SECTION G-G

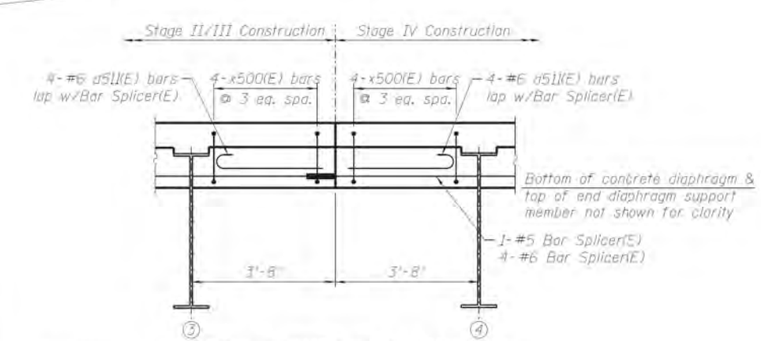

DETAIL @ JOINT @ ℄ PIER 10E

Bars in 8" slab not shown for clarity.
(Looking West)

NOTES:

1. Stations are along ℄ Ramp EN & PGL unless noted otherwise.
2. Minimum lap for #5 bars shall be 3'-3" and for #6 bars shall be 3'-10".
3. Bars indicated 41x12-#5 etc. indicates 41 lines of bars with 12' lengths per line.
4. Bend longitudinal reinforcement bars as required to fit in the field.
5. See Sheet S-81 for parapet reinforcement.
6. See Sheet S-86 for deck cross section.
7. See Sheet S-86 for Bill of Material.
8. See Sheet S-103 for DS-11 Drainage Scupper.
9. See Sheet S-87 for Deck Pouring Sequence.

MODEL: Default
FILE NAME: pw:\\ildanrcom.dot.illinois.gov:PWIDOT\Documents\IDOT Offices\District 1\Projects\D132320\CADData\Design\D132320-erHdge.dgn

USER NAME = diazia	DESIGNED -	REVISED -	
	DRAWN -	REVISED -	
PLOT SCALE = 100.0000 ' / in.	CHECKED -	REVISED -	
PLOT DATE = 12/6/2019	DATE -	REVISED -	

STATE OF ILLINOIS
DEPARTMENT OF TRANSPORTATION

EXISTING DECK PLAN
SN: 016-1503

SCALE: | SHEET OF SHEETS | STA. TO STA.

VAR. RTE.	SECTION	COUNTY	TOTAL SHEETS	SHEET NO.
VAR.	2019-155-BR	VARIOUS	107	33
		CONTRACT NO. 62K32		
	ILLINOIS	FED. AID PROJECT		

FOR INFORMATION ONLY

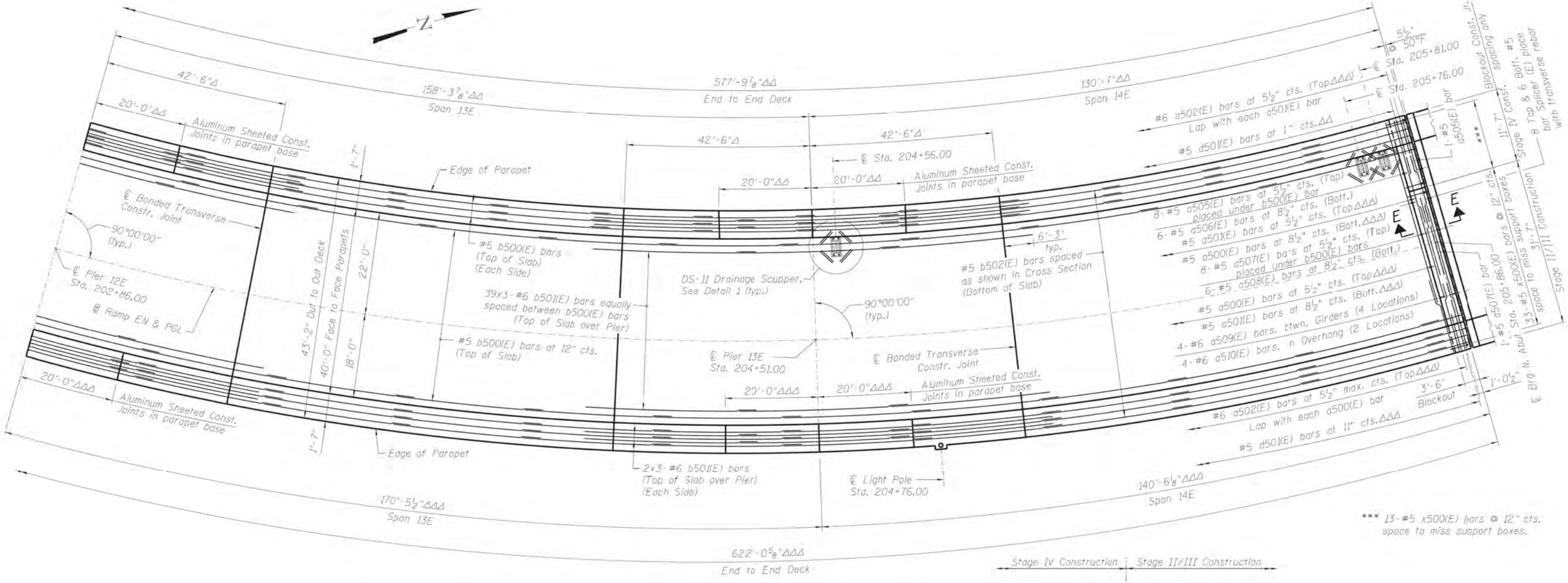

DECK PLAN XI - S.N. 016-1503 (UNIT 3)

Δ Measure along ℄ Ramp EN (S.N. 016-1503).
ΔΔ Measured along inside face of west parapet.
ΔΔΔ Measured along inside face of east parapet.

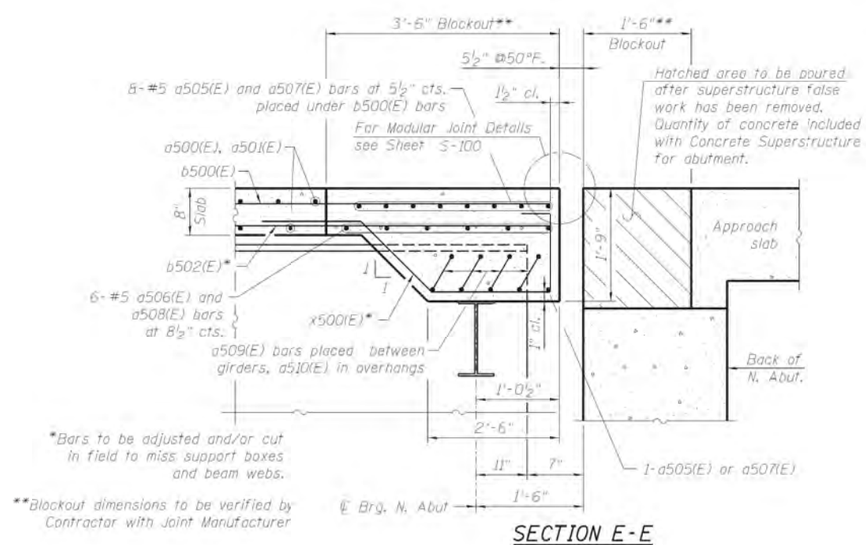

SECTION E-E

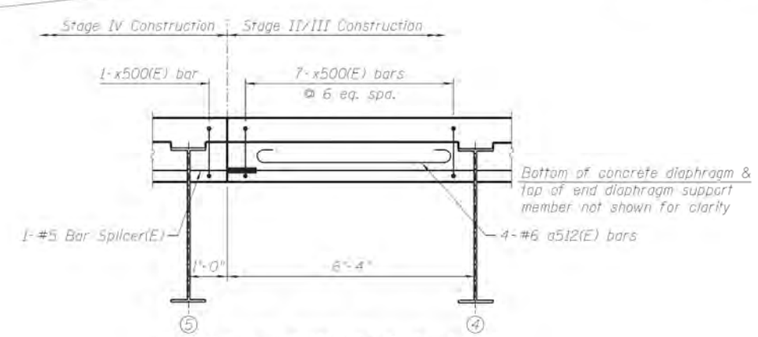

DETAIL @ JOINT @ ℄ N. ABUT.

Bars in 8" slab not shown for clarity.
(Looking East)

NOTES:

1. Stations are along ℄ Ramp EN & PGL unless noted otherwise.
2. Minimum lap for #5 bars shall be 3'-3" and for #6 bars shall be 3'-10".
3. Bars indicated 41x12-#5 etc. indicates 41 lines of bars with 12 lengths per line.
4. Bend longitudinal reinforcement bars as required to fit in the field.
5. See Sheet S-81 for parapet reinforcement.
6. See Sheet S-86 for deck cross section.
7. See Sheet S-86 for Bill of Material.
8. See Sheet S-75 for Detail 1 and Sheet S-103 for DS-11 Drainage Scupper.
9. See Sheet S-87 for Deck Pouring Sequence.

MODEL: Default
FILE NAME: pw:\\planroom.dot.illinois.gov:PWIDOT\Documents\IDOT Offices\District 1\Projects\D132320\CADData\Design\D132320-eorbge.dgn

USER NAME = diazia	DESIGNED -	REVISED -	
	DRAWN -	REVISED -	
PLOT SCALE = 100.0000 ' / in.	CHECKED -	REVISED -	
PLOT DATE = 12/6/2019	DATE -	REVISED -	

STATE OF ILLINOIS
DEPARTMENT OF TRANSPORTATION

EXISTING DECK PLAN
SN: 016-1503

SCALE: | SHEET OF SHEETS | STA. TO STA.

VAR. RTE.	SECTION	COUNTY	TOTAL SHEETS	SHEET NO.
VAR.	2019-155-BR	VARIOUS	107	34

CONTRACT NO. 62K32

ILLINOIS | FED. AID PROJECT

FOR INFORMATION ONLY

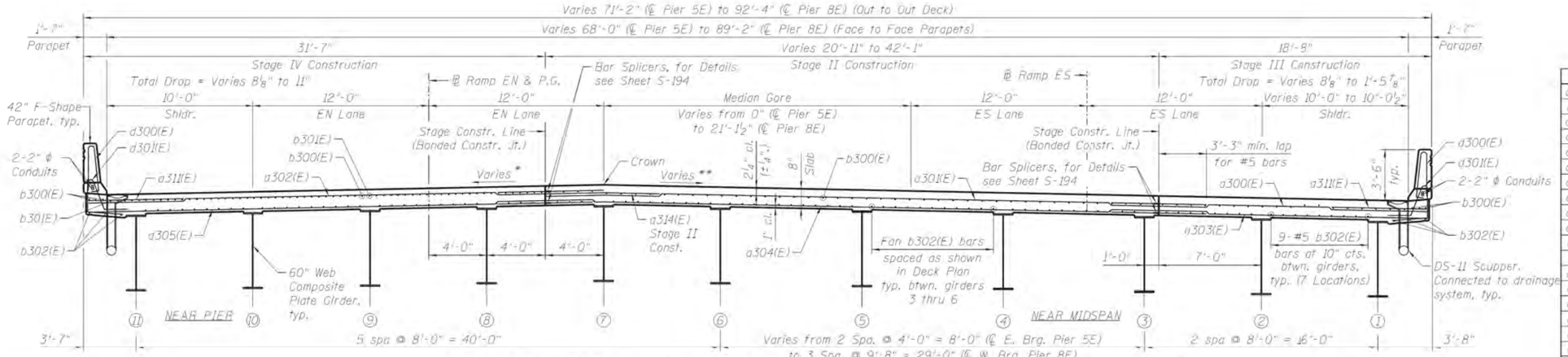

DECK CROSS SECTION - S.N. 016-1503 (UNIT 1)

(Looking East)

* Slope increases from 2.00% @ Sta. 197+20.89 to 2.71% @ Sta. 197+41.50.

** Slope increases from 2.00% @ Sta. 197+20.89 to 2.71% @ Sta. 197+41.50.

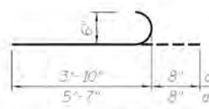

BAR a315(E) & a323(E)

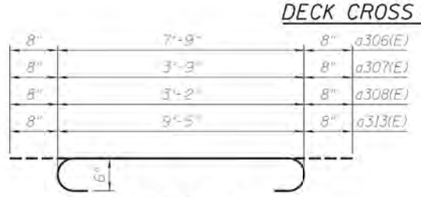

BAR a306(E), a307(E), a308(E) & a313(E)

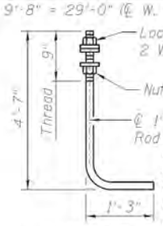

ANCHOR ROD

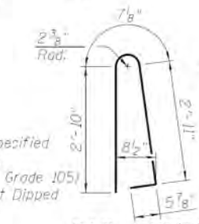

BAR d300(E)

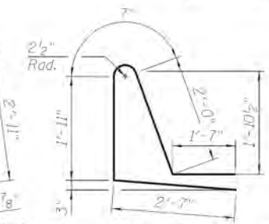

BAR d301(E)

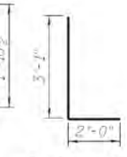

BAR d303(E)

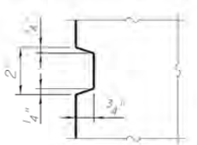

REVEAL DETAIL

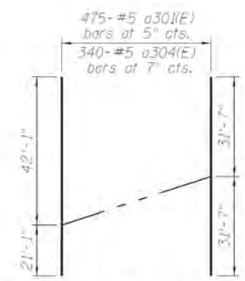

FIELD CUTTING DIAGRAM

Order a301(E) & a304(E) bars full length. Cut as shown and use remainder of bars at opposite end.

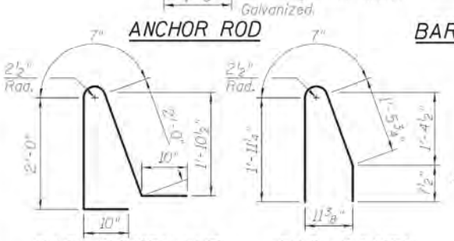

BAR d304(E) ALT

BAR d304(E)

BAR d305(E)

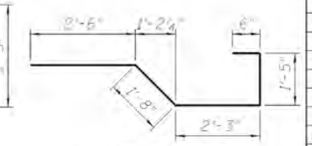

BAR x300(E)

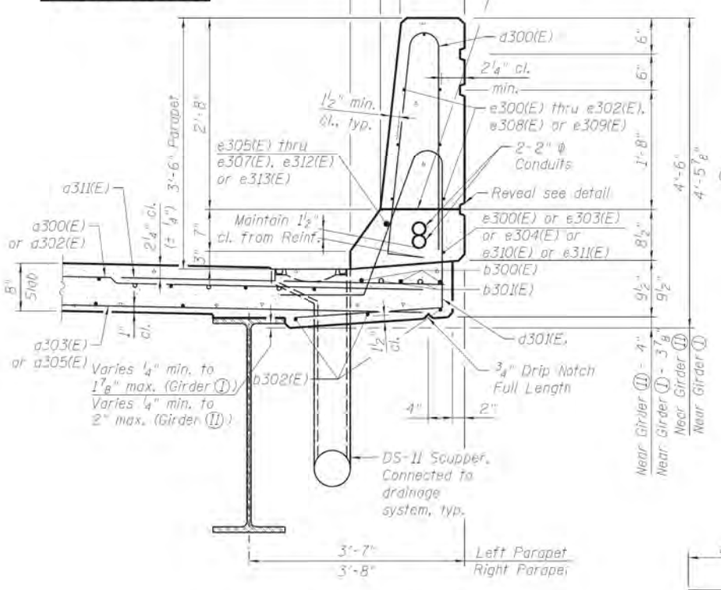

SECTION THRU PARAPET

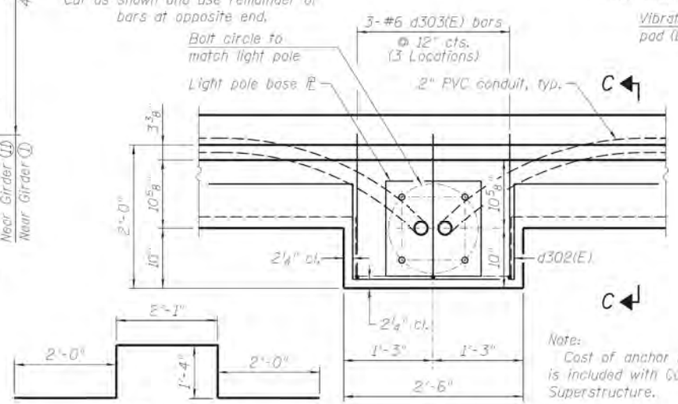

Note: Cost of anchor rods is included with Concrete Superstructure.

BAR d302(E)

PLAN

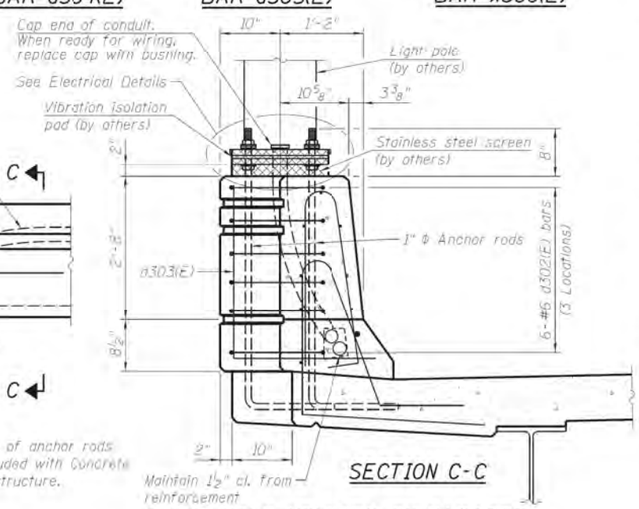

SECTION C-C

LIGHT POLE MOUNTED ON PARAPET

SUPERSTRUCTURE BILL OF MATERIAL S.N. 016-1503 (UNIT 1)

Bar	No.	Size	Length	Shape
a300(E)	950	#5	18'-4"	
a301(E)	475	#5	63'-2"	
a302(E)	958	#5	31'-3"	
a303(E)	680	#5	18'-4"	
a304(E)	340	#5	63'-2"	
a305(E)	687	#5	31'-3"	
a306(E)	44	#6	9'-1"	
a307(E)	8	#6	5'-1"	
a308(E)	16	#6	4'-6"	
a309(E)	8	#5	20'-6"	
a310(E)	7	#5	20'-6"	
a311(E)	1932	#6	7'-1"	
a312(E)	64	#5	1'-6"	
a313(E)	12	#6	10'-9"	
a314(E)	950	#5	7'-3"	
a315(E)	20	#6	4'-6"	
a317(E)	7	#5	23'-3"	
a318(E)	8	#5	31'-3"	
a319(E)	7	#5	37'-1"	
a320(E)	8	#5	37'-1"	
a321(E)	7	#5	31'-3"	
a322(E)	8	#5	23'-3"	
a323(E)	4	#6	6'-3"	
a324(E)	8	#5	19'-3"	
a325(E)	7	#5	19'-3"	
b300(E)	1666	#5	26'-9"	
b301(E)	558	#6	31'-9"	
b302(E)	1434	#5	29'-11"	
d300(E)	993	#5	6'-10"	
d301(E)	881	#5	8'-8"	
d302(E)	18	#6	8'-9"	
d303(E)	9	#6	5'-1"	
d304(E)	8	#5	4'-7½"	
d305(E)	8	#5	7'-11¼"	
d306(E)	4	#5	3'-2"	
e300(E)	141	#4	19'-8"	
e301(E)	14	#4	16'-8"	
e302(E)	140	#4	16'-6"	
e303(E)	8	#4	26'-8"	
e304(E)	5	#4	25'-7"	
e305(E)	8	#8	29'-1"	
e306(E)	8	#8	19'-8"	
e307(E)	5	#8	28'-1"	
e308(E)	7	#4	19'-11"	
e309(E)	14	#4	16'-10"	
e310(E)	8	#4	26'-9"	
e311(E)	5	#4	25'-8"	
e312(E)	8	#8	29'-2"	
e313(E)	5	#8	28'-2"	
e314(E)	11	#4	3'-5"	
e315(E)	2	#8	3'-5"	
x300(E)	167	#5	8'-4"	
Reinforcement Bars, Epoxy Coated			Pound	310,980
Concrete Superstructure			Cu. Yd.	1014.4
Bridge Deck Grooving (Longitudinal)			Sq. Yd.	3,425
Protective Coat			Sq. Yd.	3,920

MODEL: Default
FILE NAME: pw:\\ildot-pw.bentley.com:ildot-pw\Documents\IDOT Offices\District 1\Projects\D132320\CADData\Design\D132320-ex-bridge.dgn

USER NAME = diazia	DESIGNED -	REVISED -	
	DRAWN -	REVISED -	
PLOT SCALE = 100.0000 ' / in.	CHECKED -	REVISED -	
PLOT DATE = 12/6/2019	DATE -	REVISED -	

STATE OF ILLINOIS
DEPARTMENT OF TRANSPORTATION

EXISTING CROSS SECTION
SN: 016-1503

SCALE: | SHEET OF SHEETS | STA. TO STA.

VAR. RTE.	SECTION	COUNTY	TOTAL SHEETS	SHEET NO.
VAR.	2019-155-BR	VARIOUS	107	35

CONTRACT NO. 62K32

ILLINOIS | FED. AID PROJECT

FOR INFORMATION ONLY

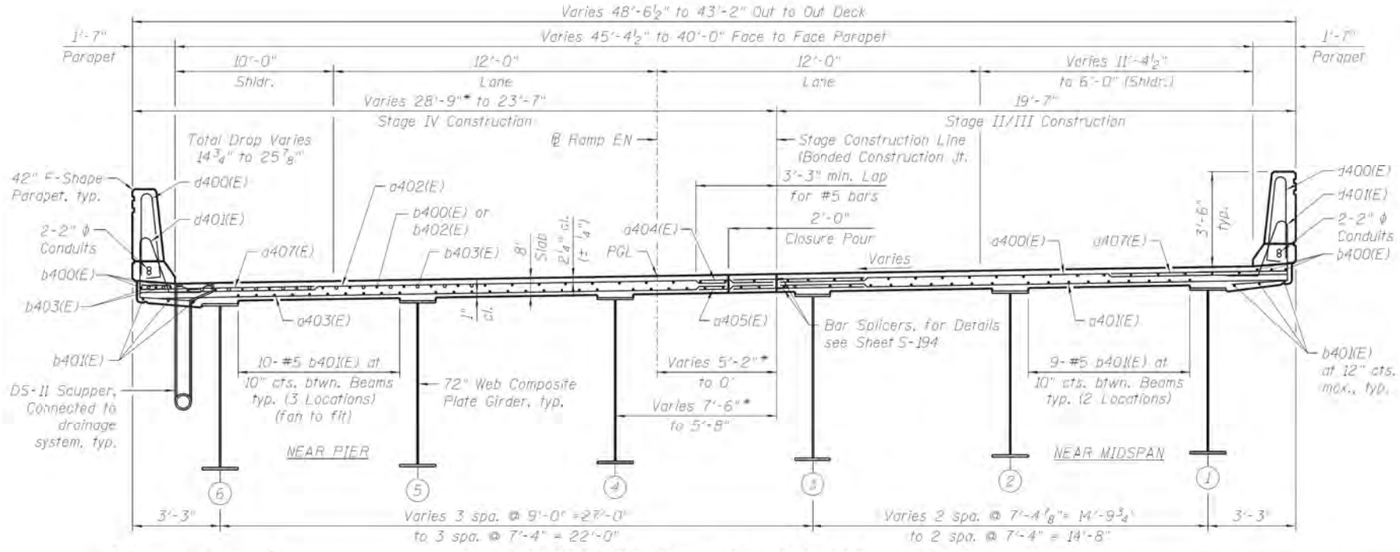

* Measured at edge of blockout/deck interface.

DECK CROSS SECTION - S.N. 016-1503 - UNIT 2

(Looking East)

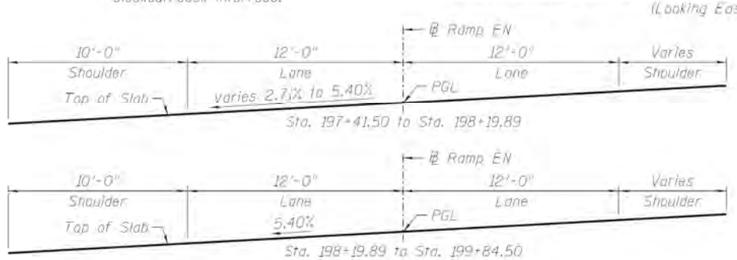

DECK CROSS SLOPE DETAIL

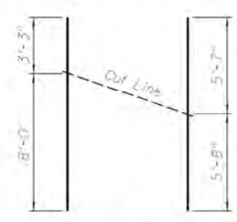

d404(E) & d405(E) CUTTING DIAGRAM

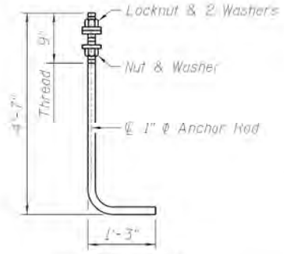

ANCHOR ROD

Diameter as specified for light poles. (ASTM F 1554 Grade 105) Full Length Hot Dipped Galvanized.

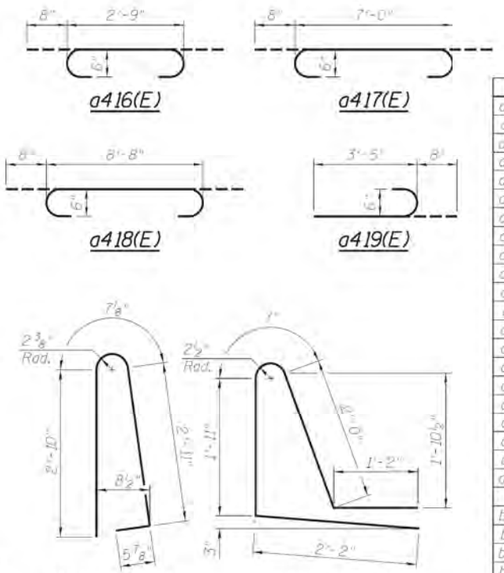

SUPERSTRUCTURE BILL OF MATERIAL S.N. 016-1503 (UNIT 2)

Bar	No.	Size	Length	Shape
a400(E)	586	#5	13'-3"	
a401(E)	418	#5	19'-3"	
a402(E)	586	#5	23'-3"	
a403(E)	418	#5	23'-3"	
a404(E)	71	#5	11'-3"	
a405(E)	51	#5	11'-3"	
a406(E)	16	#5	1'-6"	
a407(E)	1204	#6	6'-9"	
a408(E)	8	#5	31'-3"	
a409(E)	7	#5	31'-3"	
a410(E)	8	#5	16'-7"	
a411(E)	7	#5	16'-7"	
a412(E)	8	#5	21'-3"	
a413(E)	7	#5	21'-3"	
a414(E)	8	#5	21'-3"	
a415(E)	7	#5	21'-3"	
a416(E)	16	#6	4'-1"	
a417(E)	20	#6	8'-4"	
a418(E)	12	#6	10'-0"	
a419(E)	8	#6	4'-1"	
a420(E)	4	#6	7'-4"	
b400(E)	490	#5	28'-0"	
b401(E)	486	#5	31'-0"	
b402(E)	24	#5	21'-9"	
b403(E)	132	#6	30'-1"	
b404(E)	3	#5	3'-4"	
d400(E)	594	#5	6'-10"	
d401(E)	530	#5	7'-10"	
d402(E)	6	#6	5'-1"	
d403(E)	12	#6	8'-9"	
e400(E)	32	#4	13'-8"	
e401(E)	14	#4	15'-11"	
e402(E)	70	#4	15'-8"	
e403(E)	8	#4	25'-7"	
e404(E)	8	#8	27'-11"	
e405(E)	4	#8	13'-8"	
e406(E)	7	#4	17'-4"	
e407(E)	70	#4	17'-2"	
e408(E)	7	#4	17'-10"	
e409(E)	4	#4	27'-10"	
e410(E)	4	#4	28'-0"	
e411(E)	4	#8	30'-4"	
e412(E)	4	#8	30'-3"	
x400(E)	97	#5	8'-4"	
Reinforcement Bars, Epoxy Coated		Pound	110,370	
Concrete Superstructure		Cu. Yd.	376.3	
Bridge Deck Grooving (Longitudinal)		Sq. Yd.	1,093	
Protective Coat		Sq. Yd.	1,389	

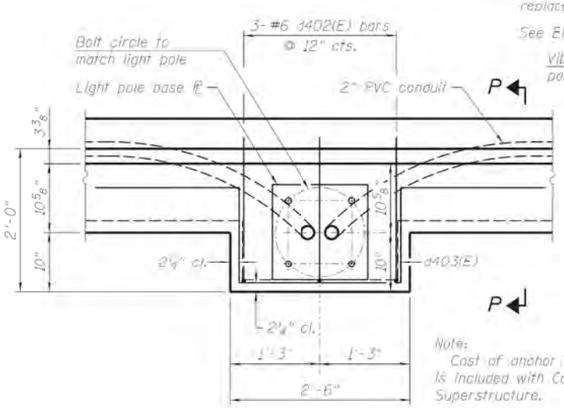

PLAN

LIGHT POLE MOUNTED ON PARAPET

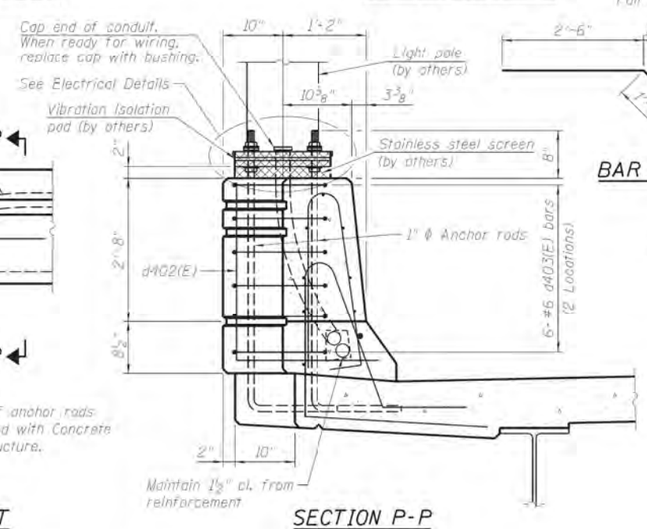

SECTION P-P

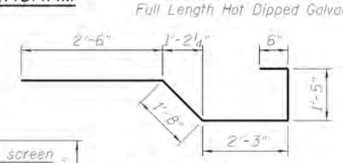

BAR x400(E)

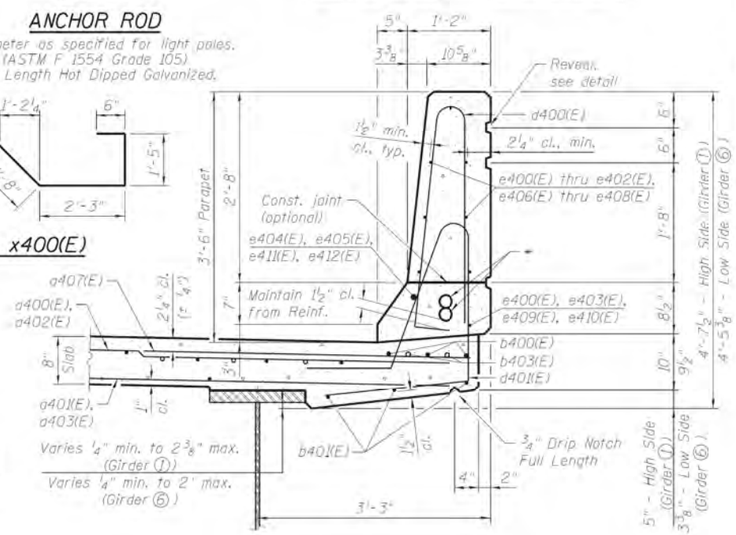

SECTION THRU PARAPET

*2-2" ϕ Conduits for lighting in left Parapet
2-2" ϕ Conduits for ITS in right Parapet

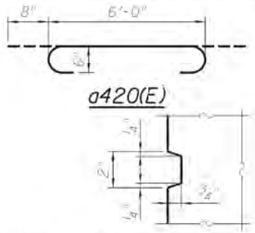

REVEAL DETAIL

USER NAME = diazia	DESIGNED -	REVISED -	
	DRAWN -	REVISED -	
PLOT SCALE = 100.0000 ' / in.	CHECKED -	REVISED -	
PLOT DATE = 12/6/2019	DATE -	REVISED -	

STATE OF ILLINOIS
DEPARTMENT OF TRANSPORTATION

EXISTING CROSS SECTION
SN: 016-1503

SCALE: | SHEET OF SHEETS | STA. TO STA.

VAR. RTE.	SECTION	COUNTY	TOTAL SHEETS	SHEET NO.
VAR.	2019-155-BR	VARIOUS	107	36

CONTRACT NO. 62K32

ILLINOIS | FED. AID PROJECT

MODEL: Default
FILE NAME: pw:\\ildanroom.dot.illinois.gov:PWIDOT\Documents\IDOT Offices\District 1\Projects\D132320\CADData\Design\D132320-ebridge.dgn

FOR INFORMATION ONLY

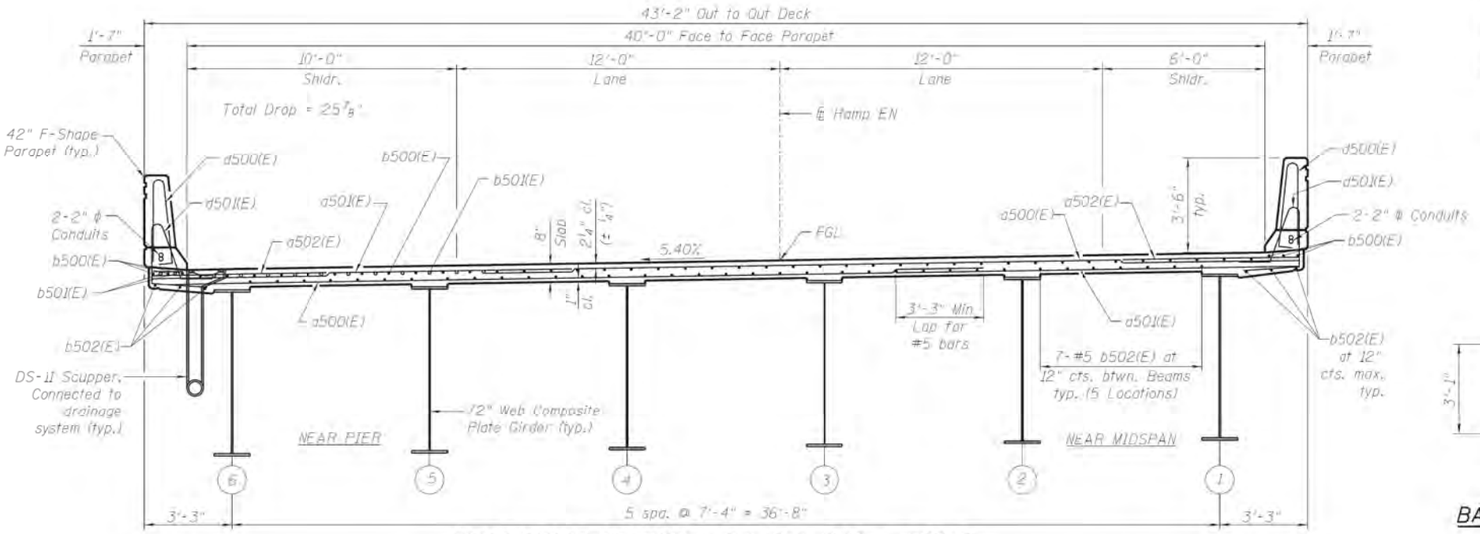

DECK CROSS SECTION - S.N. 016-1503 - UNIT 3

(Looking North)

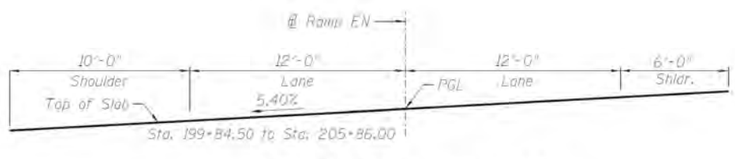

DECK CROSS SLOPE DETAIL

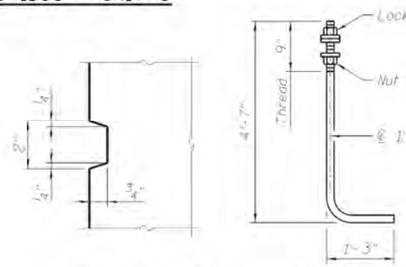

REVEAL DETAIL

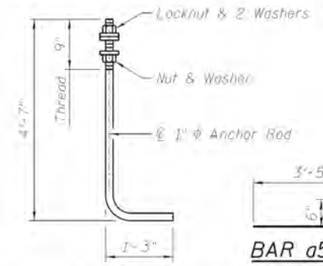

ANCHOR ROD

Diameter as specified for light poles. (ASTM F 1554 Grade 105)

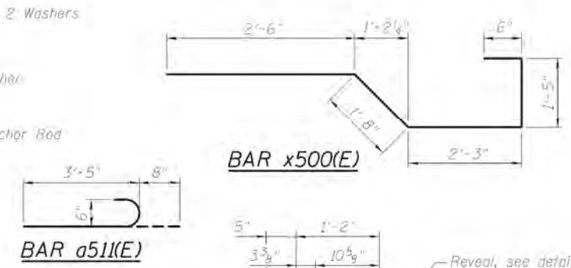

BAR x500(E)

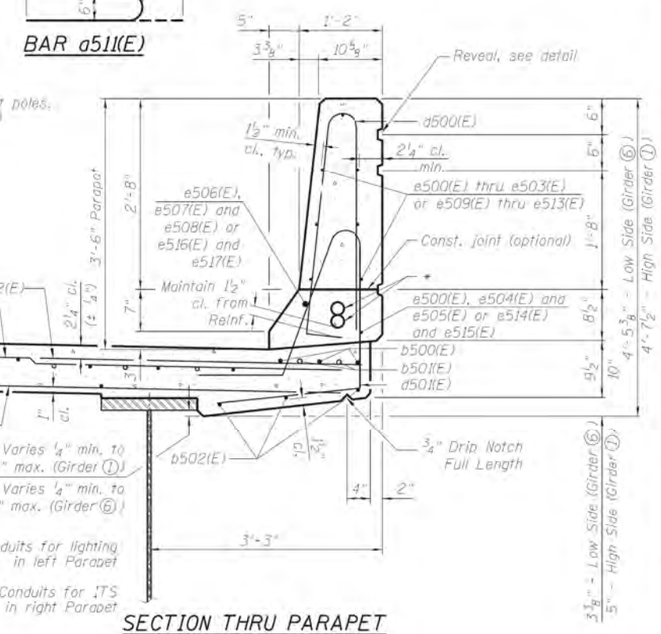

BAR a511(E)

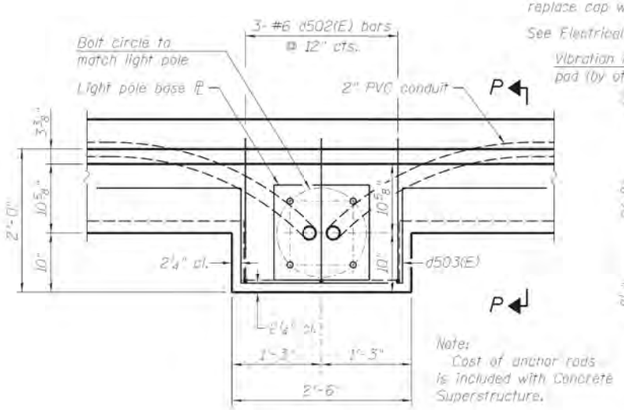

PLAN

LIGHT POLE MOUNTED ON PARAPET

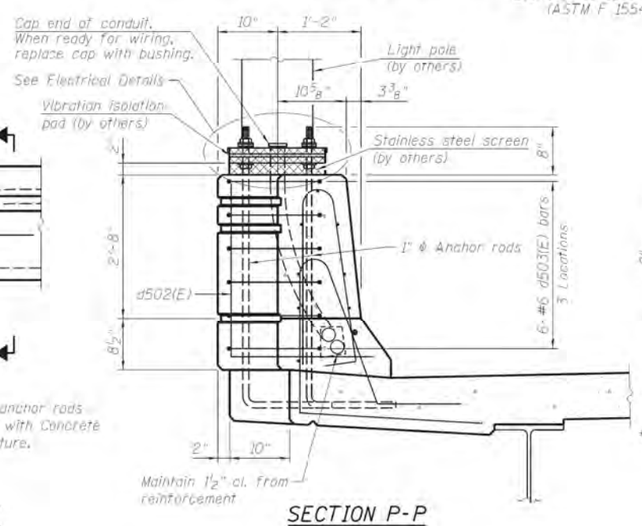

SECTION P-P

SECTION THRU PARAPET

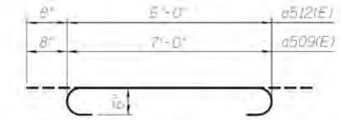

BAR d509(E) & d512(E)

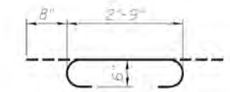

BAR d510(E)

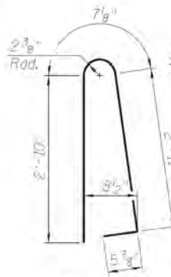

BAR d500(E)

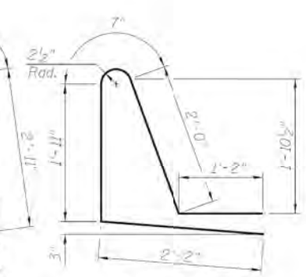

BAR d501(E)

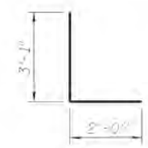

BAR d502(E)

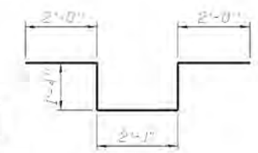

BAR d503(E)

SUPERSTRUCTURE BILL OF MATERIAL S.N. 016-1503 (UNIT 3)

Bar	No.	Size	Length	Shape
d500(E)	2212	#5	30'-3"	
d501(E)	2212	#5	15'-6"	
d502(E)	2718	#6	6'-9"	
d503(E)	15	#5	21'-3"	
d504(E)	15	#5	21'-3"	
d505(E)	9	#5	11'-3"	
d506(E)	6	#5	11'-3"	
d507(E)	9	#5	31'-3"	
d508(E)	6	#5	31'-3"	
d509(E)	32	#6	8'-4"	
d510(E)	16	#6	4'-1"	
d511(E)	8	#6	4'-1"	
d512(E)	4	#6	7'-4"	
d513(E)	40	#5	1'-6"	
b500(E)	1104	#5	29'-1"	
b501(E)	387	#6	35'-1"	
b502(E)	1107	#5	26'-2"	
e500(E)	1471	#5	6'-10"	
e501(E)	1311	#5	7'-10"	
e502(E)	9	#6	5'-1"	
e503(E)	18	#6	8'-9"	
e500(E)	110	#4	19'-8"	
e501(E)	14	#4	17'-9"	
e502(E)	70	#4	18'-2"	
e503(E)	70	#4	19'-4"	
e504(E)	8	#4	29'-2"	
e505(E)	8	#4	31'-0"	
e506(E)	8	#8	31'-6"	
e507(E)	12	#8	19'-8"	
e508(E)	8	#8	33'-5"	
e509(E)	7	#4	16'-8"	
e510(E)	84	#4	16'-11"	
e511(E)	84	#4	18'-4"	
e512(E)	14	#4	18'-2"	
e513(E)	7	#4	16'-10"	
e514(E)	8	#4	31'-7"	
e515(E)	10	#4	27'-8"	
e516(E)	10	#8	28'-3"	
e517(E)	10	#8	30'-3"	
x500(E)	92	#5	8'-4"	
Reinforcement Bars, Epoxy Coated			Pound	251,410
Concrete Superstructure			Cu. Yd.	878.5
Bridge Deck Grooving (Longitudinal)			Sq. Yd.	2,534
Protective Coat			Sq. Yd.	3,271

MODEL: Default
FILE NAME: pw:\\dlanroom.dot.illinois.gov:PWIDOT\Documents\IDOT Offices\District 1\Projects\D132320\CADData\Design\D132320-exRdge.dgn

USER NAME = diazia	DESIGNED -	REVISED -	
	DRAWN -	REVISED -	
PLOT SCALE = 100.0000 ' / in.	CHECKED -	REVISED -	
PLOT DATE = 12/6/2019	DATE -	REVISED -	

STATE OF ILLINOIS
DEPARTMENT OF TRANSPORTATION

EXISTING CROSS SECTION
SN: 016–1503

SCALE: | SHEET OF SHEETS | STA. TO STA.

VAR. RTE.	SECTION	COUNTY	TOTAL SHEETS	SHEET NO.
VAR.	2019-155-BR	VARIOUS	107	37
		CONTRACT NO. 62K32		
	ILLINOIS	FED. AID PROJECT		

FOR INFORMATION ONLY

Bench Mark: BM-4, chiseled square on NE corner of crashwall at existing Pier E20, just East of Moe Drive, on existing S.N. 016-1075 carrying NB I-55 to NB L.S.D., Elev. 594.65 (NAVD 88).

Existing Structure: (no salvaging) S.N. 016-1052 was built in 1965 & carries SB Lake Shore Drive traffic to SB I-55 over the McCormick Place Busway, Metra Electric RR, ICRR, Mines Drive, & Moe Drive. The 1227'-0" long structure has 11-spans of 66.16', 121.77', 121.02', 76.79', 85.37', 95.10', 72.68', 92.16', 65.90', 95', & 82' ending with a 253' north terminal structure. The out-to-out deck width varies from 60'-8" to 64'-2" (Spans 1-4) and is a constant 43'-7" (Spans 5-11). The structure uses 54" steel plate girders (Spans 1-9) & 48" steel plate girders (Spans 10-11) composite with a 7.5" concrete deck. All substructures use 3-6 column concrete piers & concrete caissons drilled in rock, except Pier W21, which utilizes a 62" steel cap (fracture critical member) on concrete columns/caissons. It was rehabilitated in 1975 (deck repair, exp. joint replacement, & steel repainting), 1990 (bearing replacement), 1994 (deck repair, exp. joint replacement, & pier repair), 1996 (pier repair), 2002 (steel repainting), 2005 (pier repair), and 2008 (deck repair).

Traffic Control: For Stage 1a, maintain 2-lanes of SW traffic on existing S.N. 016-1052 during construction of Spans 13W-20W (Units 1-3) & west half of Spans 21W-22W (Unit 4) of proposed S.N. 016-1505. For Stage 1b, reduce SW traffic to 1-lane on north & west halves of existing S.N. 016-1052 during construction of south half of Spans 1W-5W of proposed S.N. 016-1501, south 1/3 of Spans 6W-8W of proposed S.N. 016-1504 (Unit 1), & east half of Spans 10W-12W of proposed S.N. 016-1504 (Unit 2). SW traffic to increase to 2-lanes & merge with NW traffic only for special events at McCormick Place & Soldier Field in Stage 1b. For Stage 11a, maintain 1-lane of SW traffic on north & west halves of existing S.N. 016-1052 for construction of center 1/3 of Spans 6W-8W of proposed S.N. 016-1504 (Unit 1), Span 9W & west half of Spans 10W-12W of proposed S.N. 016-1504 (Unit 2), & east half of Spans 21W-22W of proposed S.N. 016-1505 (Unit 4). For Stage 11b, shift SW traffic & increase to 2-lanes onto south & east halves of proposed S.N. 016-1504 during construction of north half of Spans 1W-5W of proposed S.N. 016-1501 & north 1/3 of Spans 6W-8W of proposed S.N. 016-1504 (Unit 1). Temporary lane closures may be required for McCormick Place Busway, Mines Drive, Moe Drive, & west shoulder of SB Lake Shore Drive with temporary RR track closures for Metra Electric & Illinois Central.

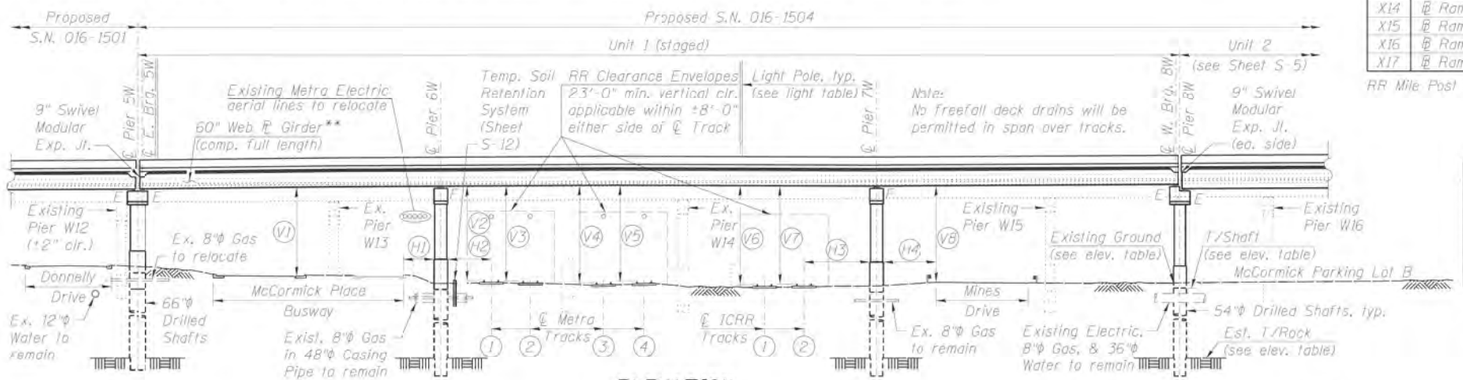

ELEVATION

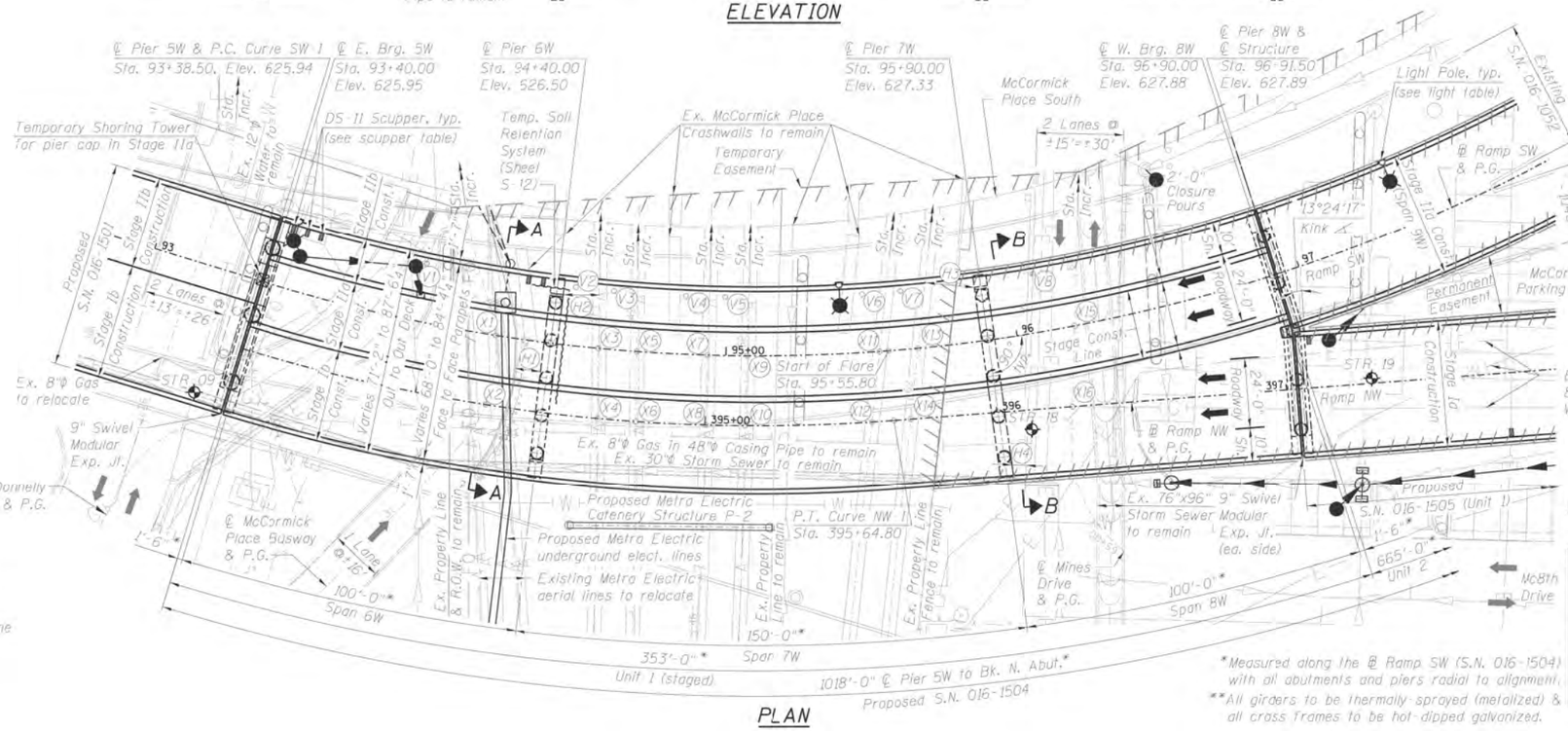

PLAN

STATION EQUATION TABLE

Sta. Eqn.	Upper Roadway Alignment	Upper Roadway Station	Lower Roadway Alignment	Lower Roadway Station
X1	℄ Ramp SW	94+20.88	℄ Busway	31+77.92
X2	℄ Ramp NW	394+24.42	℄ Busway	31+53.69
X3	℄ Ramp SW	94+56.42	℄ Metra 1	36+85.91
X4	℄ Ramp NW	394+63.21	℄ Metra 1	36+61.84
X5	℄ Ramp SW	94+69.51	℄ Metra 2	41+89.30
X6	℄ Ramp NW	394+76.33	℄ Metra 2	41+65.26
X7	℄ Ramp SW	94+93.75	℄ Metra 3	46+94.91
X8	℄ Ramp NW	395+00.15	℄ Metra 3	46+70.91
X9	℄ Ramp SW	95+07.24	℄ Metra 4	51+99.26
X10	℄ Ramp NW	395+13.72	℄ Metra 4	51+75.26
X11	℄ Ramp SW	95+52.71	℄ ICRR 1	57+12.29
X12	℄ Ramp NW	395+57.30	℄ ICRR 1	56+87.93
X13	℄ Ramp SW	95+65.91	℄ ICRR 2	62+17.65
X14	℄ Ramp NW	395+70.48	℄ ICRR 2	61+93.16
X15	℄ Ramp SW	96+20.24	℄ Mines Dr.	65+83.03
X16	℄ Ramp NW	396+26.24	℄ Mines Dr.	65+55.31
X17	℄ Ramp SW	100+90.58	℄ Moe Dr.	78+43.12

RR Mile Post 2.9 applicable to all RR tracks for Metra & ICRR.

LIGHT PEDESTAL TABLE

ID	Station	Offset	Horiz. Clr.
AB1	93+45.00	23'-7" (Lt.)	8'-9"
AA2	95+40.00	23'-7" (Lt.)	21'-0"
AB2	97+40.00	23'-7" (Lt.)	34'-8"
AA3	99+40.00	23'-7" (Lt.)	44'-7"
AB3	101+40.00	23'-7" (Lt.)	46'-1"
AA4	103+40.00	23'-7" (Lt.)	39'-2"

Aluminum light poles have a 12"φ (15"φ bolt circle), possess height of 45', support 6-8' mast arms, & are mounted at the parapets.

DS-11 SCUPPER TABLE

ID	Station	Offset
1	93+43.50	22'-0" (Lt.)
2	93+48.50	22'-0" (Lt.)
3	93+53.50	22'-0" (Lt.)
4	94+30.00	22'-0" (Lt.)
5	94+35.00	22'-0" (Lt.)
6	100+18.00	22'-0" (Lt.)
7	102+08.00	22'-0" (Lt.)
8	103+43.00	22'-0" (Lt.)
9	103+48.00	22'-0" (Lt.)

MIN CLEARANCE TABLE

Horizontal		Vertical	
H1	9'-0"	V1	25'-4"
H2	12'-6"	V2	26'-10"
H3	16'-9"	V3	27'-2"
H4	5'-1"	V4	27'-10"
H5	10'-3"	V5	27'-7"
H6	8'-9"	V6	28'-9"
H7	N/A	V7	28'-9"
H8	N/A	V8	29'-11"
H9	N/A	V9	22'-11"

EXISTING GROUND & ESTIMATED BEDROCK ELEVATION TABLE

Pier	NW. T/Gr.	SE. T/Gr.	T/Shaft	T/Rock
5W	597.40	596.40	595.00	529.25
6W	590.50	591.50	588.50	520.50
7W	590.50	590.75	588.50	520.50
8W	590.45	590.40	588.50	520.00
9W	590.15	590.05	582.50	515.00
10W	589.30	589.70	582.50	518.00
11W	599.20	599.50	597.50	519.00
N.Ab.	N/A	N/A	601.65	511.25

*Measured along the ℄ Ramp SW (S.N. 016-1504) with all abutments and piers radial to alignment.

**All girders to be thermally-sprayed (metalized) & all cross frames to be hot-dipped galvanized.

LEGEND

- Exist. Aerial Line
- Exist. Electric Line
- Exist. Fence
- Exist. Fiber Optic Line
- Exist. Gas Line
- Exist. Guardrail
- Exist. Storm Sewer
- Exist. Water Line
- STR-09 Soil Boring Location

USER NAME = diazia	DESIGNED -	REVISED -	
	DRAWN -	REVISED -	
PLOT SCALE = 100.0000 ' / in.	CHECKED -	REVISED -	
PLOT DATE = 12/9/2019	DATE -	REVISED -	

STATE OF ILLINOIS
DEPARTMENT OF TRANSPORTATION

EXISTING GENERAL PLAN
SN: 016-1504

SCALE: SHEET OF SHEETS STA. TO STA.

VAR. RTE.	SECTION	COUNTY	TOTAL SHEETS	SHEET NO.
VAR.	2019-155-BR	VARIOUS	107	38

CONTRACT NO. 62K32

ILLINOIS FED. AID PROJECT

MODEL: Default
FILE NAME: pw:\\ullanroom.dot.illinois.gov:PWIDOT\Documents\IDOT Offices\District 1\Projects\D132320\CADData\Design\D132320-eGirdge.dgn

FOR INFORMATION ONLY

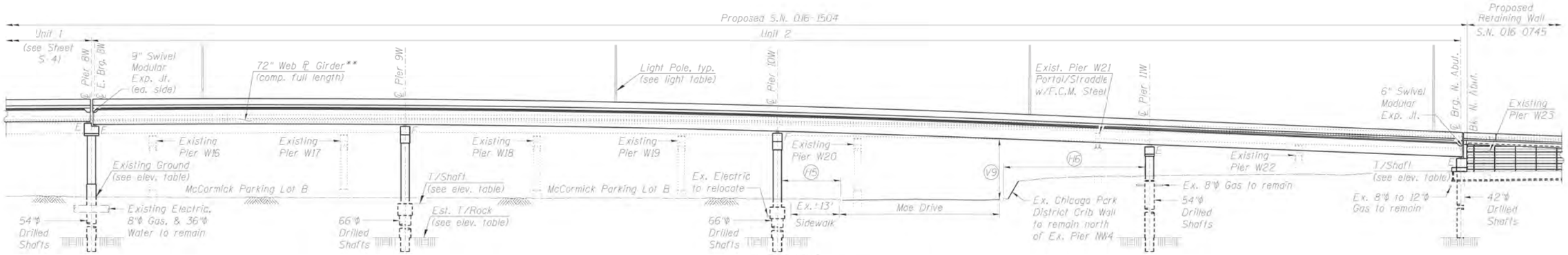

ELEVATION

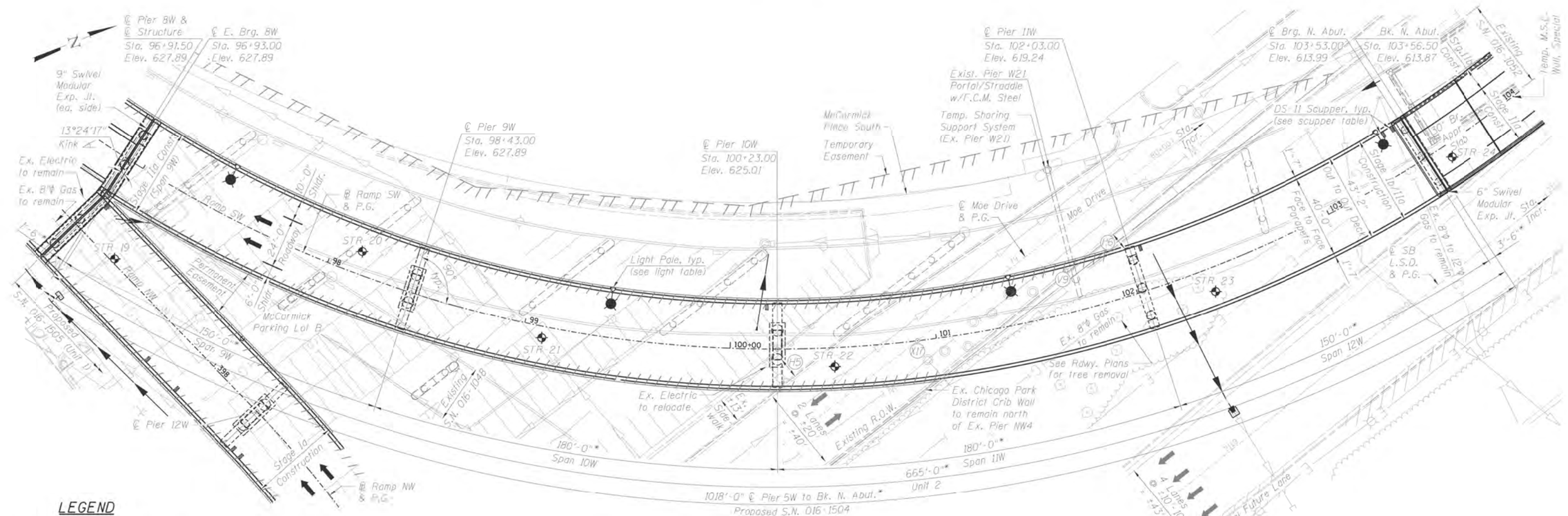

PLAN

*Measured along the ℙ Ramp SW (S.N. 016-1504) with all abutments and piers radial to alignment.

**All girders to be thermally sprayed (metalized) & all cross frames to be hot-dipped galvanized.

LEGEND

—A—A—	Exist. Aerial Line
—E—E—	Exist. Electric Line
—X—X—	Exist. Fence
—FO—FO—	Exist. Fiber Optic Line
—G—G—	Exist. Gas Line
	Exist. Guardrail
	Exist. Storm Sewer
—W—W—	Exist. Water Line
STR-19	Soil Boring Location

MODEL: Default
FILE NAME: pw:\\urbanroom.dot.illinois.gov:PWBOT\Documents\IDOT Offices\District 1\Projects\D132320\CADData\Design\D132320-ebridge.dgn

USER NAME = diazia	DESIGNED -	REVISED -	
	DRAWN -	REVISED -	
PLOT SCALE = 100.0000 ' / in.	CHECKED -	REVISED -	
PLOT DATE = 12/6/2019	DATE -	REVISED -	

STATE OF ILLINOIS
DEPARTMENT OF TRANSPORTATION

EXISTING DECK PLAN
SN: 016-1504

SCALE: | SHEET OF SHEETS | STA. TO STA.

VAR. RTE.	SECTION	COUNTY	TOTAL SHEETS	SHEET NO.
VAR.	2019-155-BR	VARIOUS	107	39
		CONTRACT NO. 62K32		
	ILLINOIS	FED. AID PROJECT		

FOR INFORMATION ONLY

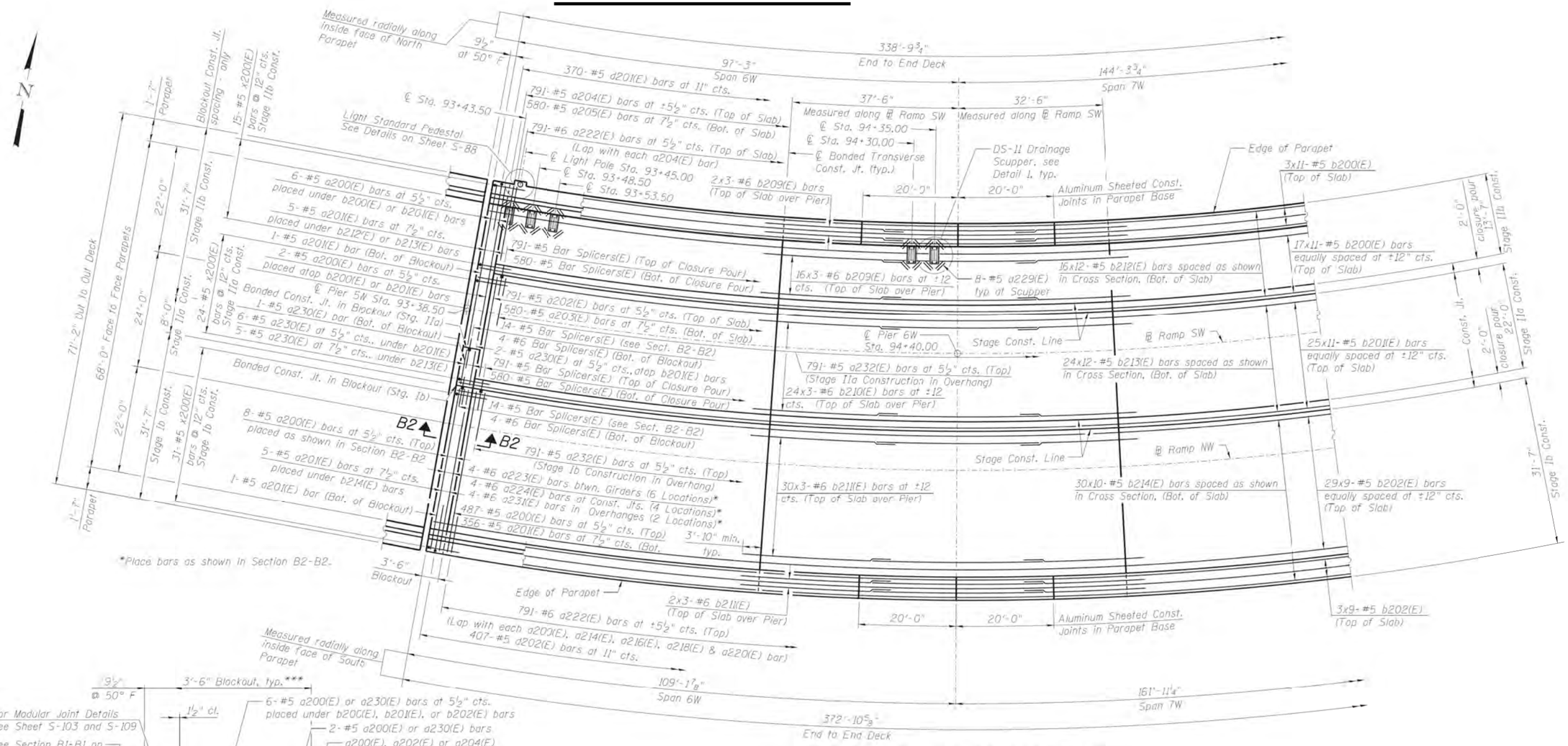

DECK PLAN IV - S.N. 016-1504 (UNIT 1)

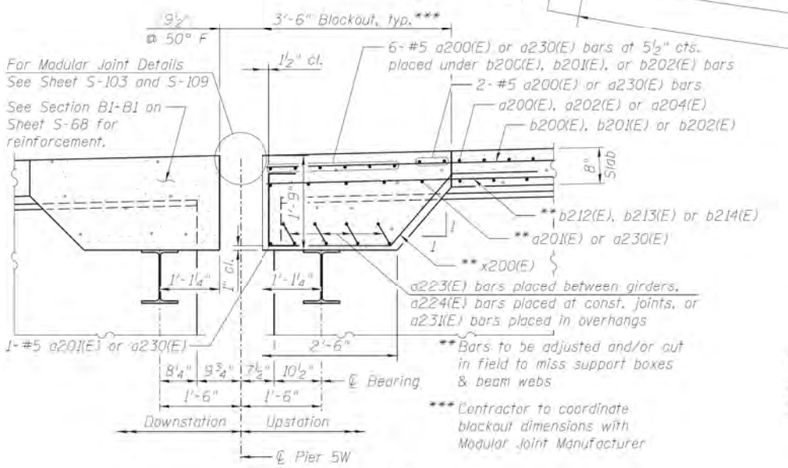

SECTION B2-B2

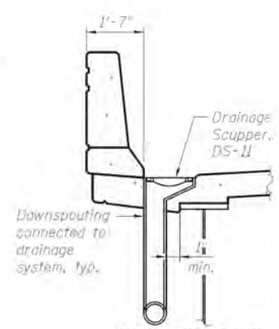

SECTION D-D

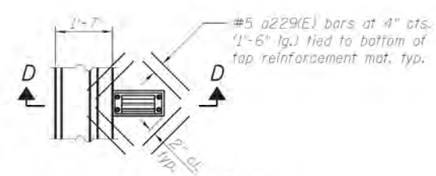

DETAIL 1
DRAINAGE SCUPPER DS-11

Note:
Reinforcement bars designated (E) shall be epoxy coated. Cut longitudinal reinforcement to clear drainage scuppers.

NOTES:

1. Stations are along ⊞ Ramp SW unless noted otherwise.
2. Minimum lap for #5 bars shall be 3'-3" and for #6 bars shall be 3'-10".
3. Bars indicated thus 41x12-#5 etc. indicates 41 lines of bars with 12 lengths per line.
4. Bend longitudinal reinforcement bars as required to fit in the field.
5. Transverse Bars placed radially and spaced along Stage Ib Construction Line.
6. See Sheet S-80 for parapet reinforcement.
7. See Sheet S-87 for deck and end of deck cross sections.
8. See Sheet S-88 for superstructure details and Bill of Material.
9. See Sheet S-94 for Deck Pouring Sequence.
10. See Sheet S-111 for DS-11 Drainage Scupper.
11. See Sheet S-222 for Bar Splicer Details & Quantities.

MODEL: Default
FILE NAME: pw:\\uhanroom.dot.illinois.gov:PWIDOT\Documents\IDOT Offices\District 1\Projects\D132320\CADData\Design\D132320-ebridge.dgn

USER NAME = diazia	DESIGNED -	REVISED -	
	DRAWN -	REVISED -	
PLOT SCALE = 100.0000 ' / in.	CHECKED -	REVISED -	
PLOT DATE = 12/6/2019	DATE -	REVISED -	

STATE OF ILLINOIS
DEPARTMENT OF TRANSPORTATION

EXISTING DECK PLAN
SN: 016-1504

SCALE: SHEET OF SHEETS STA. TO STA.

VAR. RTE.	SECTION	COUNTY	TOTAL SHEETS	SHEET NO.
VAR.	2019-155-BR	VARIOUS	107	40
		CONTRACT NO. 62K32		
	ILLINOIS	FED. AID PROJECT		

FOR INFORMATION ONLY

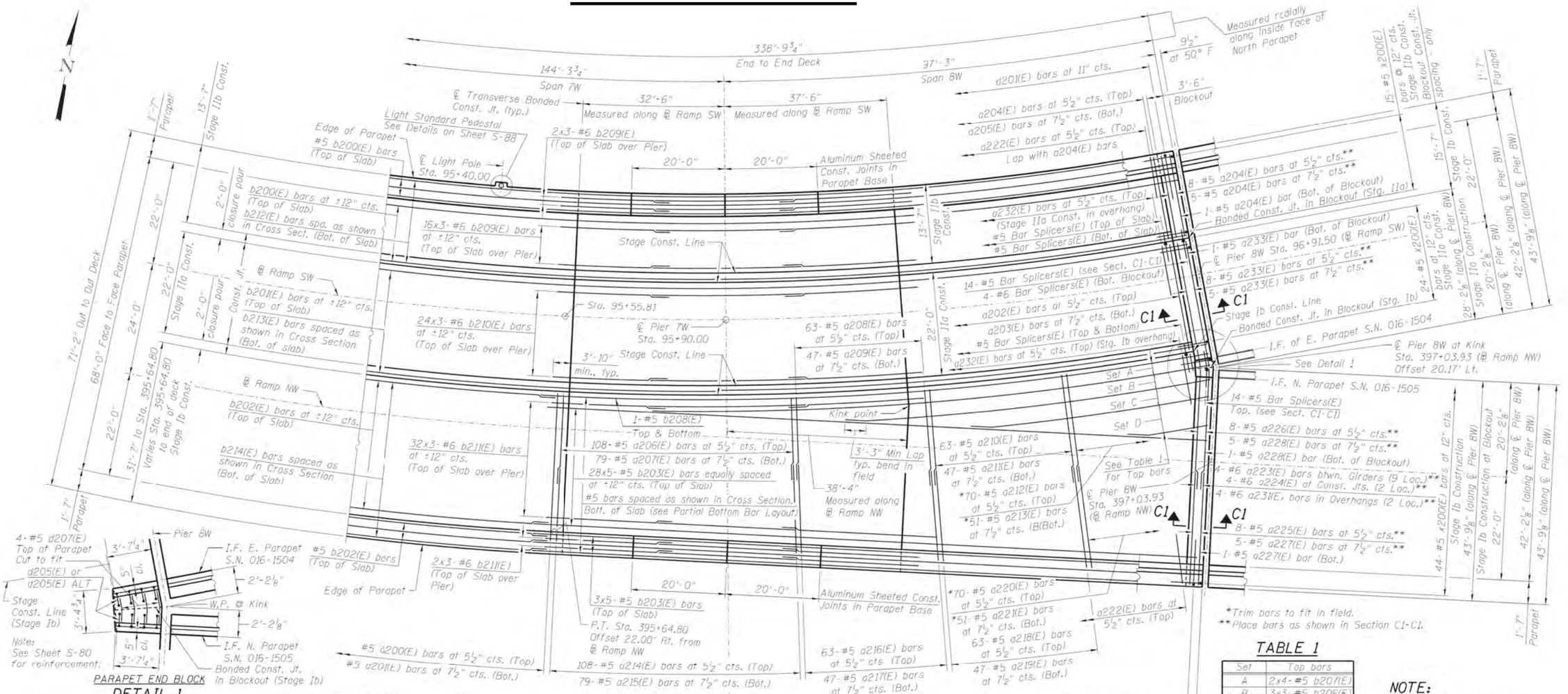

PARAPET END BLOCK
DETAIL 1

DECK PLAN V - S.N. 016-1504 (UNIT 1)

TABLE 1

Set	Top bars
A	2x4-#5 b207(E)
B	3x3-#5 b206(E)
C	5x2-#5 b205(E)
D	6-#5 b204(E)

Place bars at ±12" cts., trim to fit.

NOTE:

See Sheet S-69 for Notes.

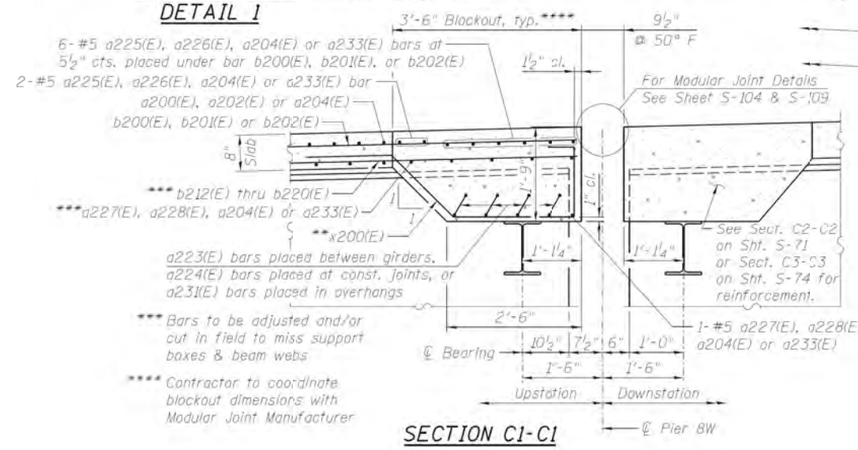

SECTION C1-C1

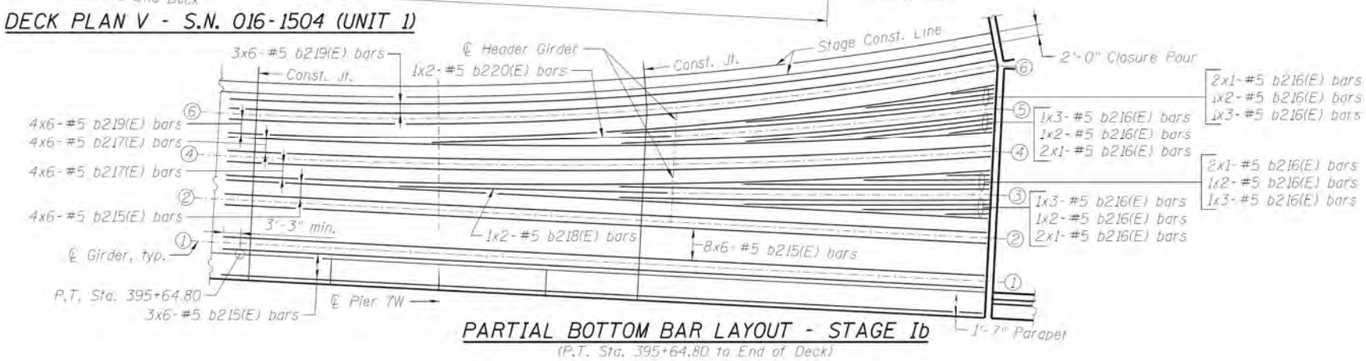

PARTIAL BOTTOM BAR LAYOUT - STAGE Ib
(P.T. Sta. 395+64.80 to End of Deck)

MODEL: Default
FILE NAME: pw:\\ahnoom.dot.illinois.gov:PWIDOT\Documents\IDOT Offices\District 1\Projects\D132320\CADData\Design\D132320-epr1ge.dgn

USER NAME = diazia	DESIGNED -	REVISED -	
	DRAWN -	REVISED -	
PLOT SCALE = 100.0000 ' / in.	CHECKED -	REVISED -	
PLOT DATE = 12/6/2019	DATE -	REVISED -	

STATE OF ILLINOIS
DEPARTMENT OF TRANSPORTATION

EXISTING DECK PLAN
SN: 016-1504

SCALE: | SHEET OF SHEETS | STA. TO STA.

VAR. RTE.	SECTION	COUNTY	TOTAL SHEETS	SHEET NO.
VAR.	2019-155-BR	VARIOUS	107	41
		CONTRACT NO. 62K32		
		ILLINOIS	FED. AID PROJECT	

FOR INFORMATION ONLY

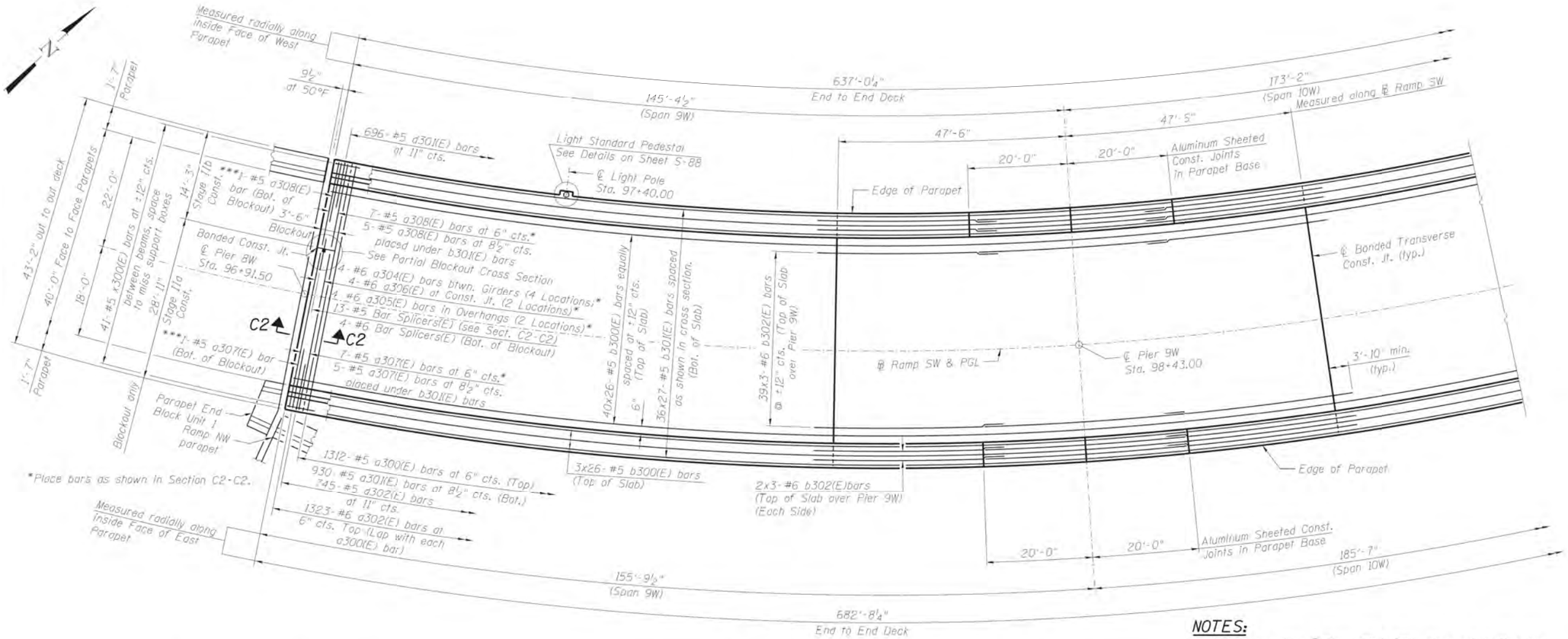

DECK PLAN VI - S.N. 016-1504 (UNIT 2)

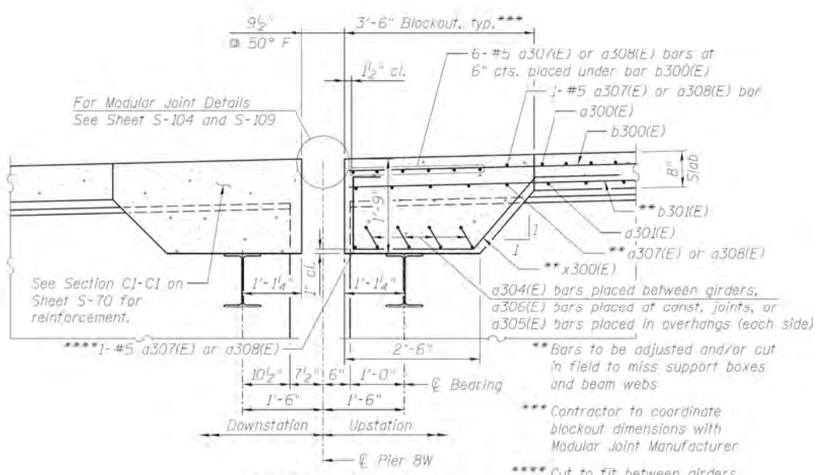

SECTION C2-C2

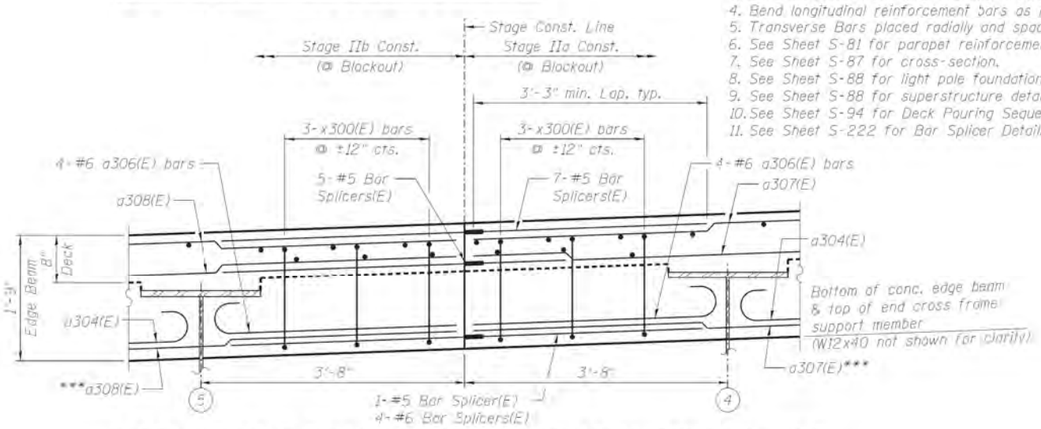

PARTIAL BLOCKOUT CROSS SECTION @ STAGE CONSTRUCTION LINE

(Looking East)

NOTES:

1. Stations are along ℄ Ramp SW & PGL unless noted otherwise.
2. Minimum lap for #5 bars shall be 3'-3" and for #6 bars shall be 3'-10".
3. Bars indicated thus 41x12-#5 etc. indicates 41 lines of bars with 12 lengths per line.
4. Bend longitudinal reinforcement bars as required to fit in the field.
5. Transverse Bars placed radially and spaced along ℄ Ramp SW.
6. See Sheet S-81 for parapet reinforcement.
7. See Sheet S-87 for cross-section.
8. See Sheet S-88 for light pole foundation details.
9. See Sheet S-88 for superstructure details and Bill of Material.
10. See Sheet S-94 for Deck Pouring Sequence.
11. See Sheet S-222 for Bar Splicer Details.

MODEL: Default
FILE NAME: pw:\\ildanoom.dot.illinois.gov:PWIDOT\Documents\IDOT Offices\District 1\Projects\D132320\CADData\Design\D132320-ebridge.dgn

USER NAME = diazia	DESIGNED -	REVISED -	
	DRAWN -	REVISED -	
PLOT SCALE = 100.0000 ' / in.	CHECKED -	REVISED -	
PLOT DATE = 12/6/2019	DATE -	REVISED -	

STATE OF ILLINOIS
DEPARTMENT OF TRANSPORTATION

EXISTING DECK PLAN
SN: 016-1504

SCALE: | SHEET OF SHEETS | STA. TO STA.

VAR. RTE.	SECTION	COUNTY	TOTAL SHEETS	SHEET NO.
VAR.	2019-155-BR	VARIOUS	107	42
		CONTRACT NO. 62K32		
	ILLINOIS	FED. AID PROJECT		

FOR INFORMATION ONLY

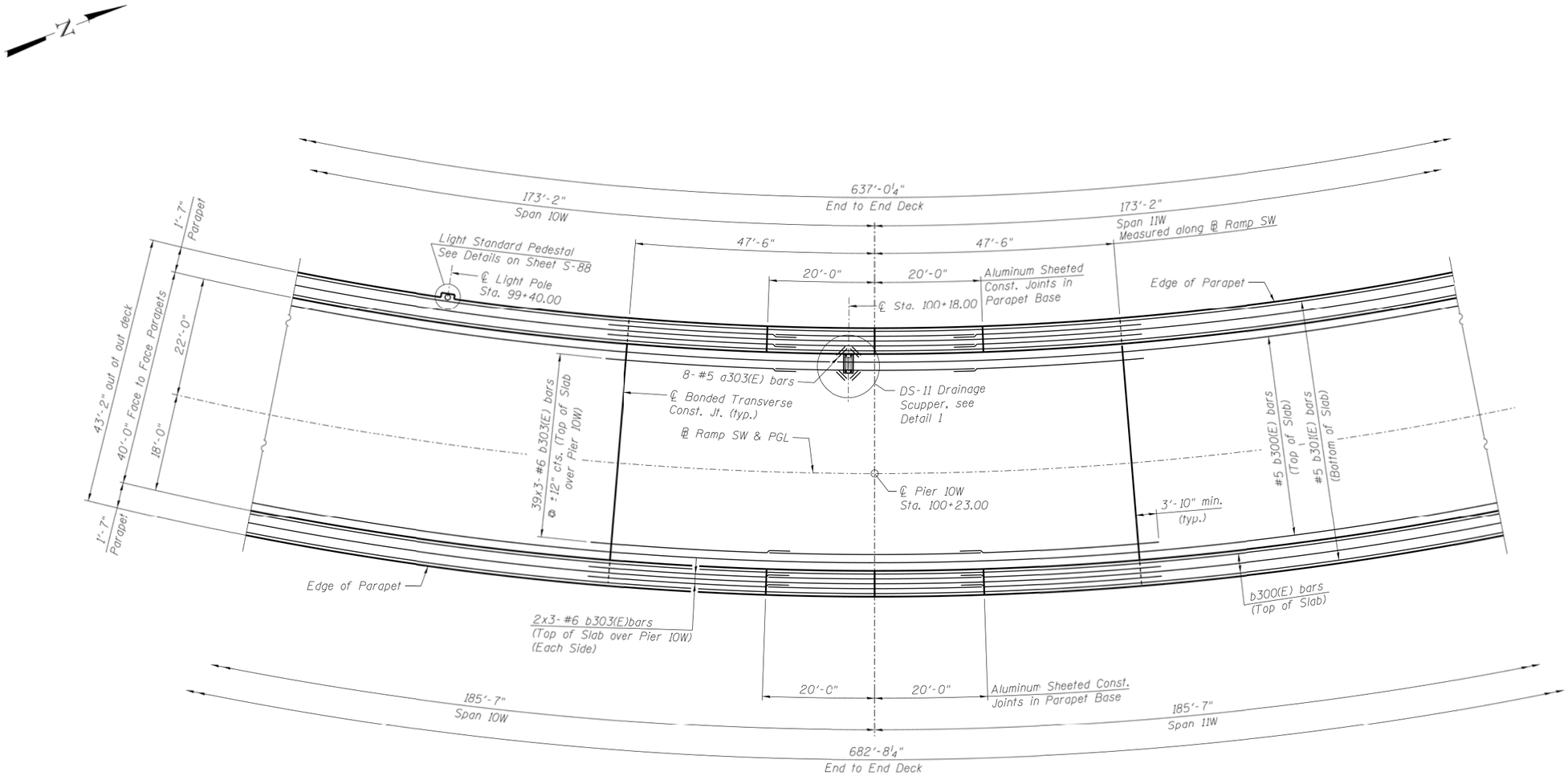

DECK PLAN VII - S.N. 016-1504 (UNIT 2)

NOTES:

1. Stations are along ℄ Ramp SW & PGL unless noted otherwise.
2. Minimum lap for #5 bars shall be 3'-3" and for #6 bars shall be 3'-10".
3. Bars indicated thus 41x12-#5 etc. indicates 41 lines of bars with 12 lengths per line.
4. Bend longitudinal reinforcement bars as required to fit in the field.
5. Transverse Bars placed radially and spaced along ℄ Ramp SW.
6. See Sheet S-73, Detail 1, and Sheet S-111 for DS-11 Drainage Scupper.
7. See Sheet S-81 for parapet reinforcement.
8. See Sheet S-87 for cross-section.
9. See Sheet S-88 for light pole foundation details.
10. See Sheet S-88 for superstructure details and Bill of Material.
11. See Sheet S-94 for Deck Pouring Sequence.

MODEL: Default
FILE NAME: pw:\\uhinoom.dot.illinois.gov:PWIDOT\Documents\IDOT Offices\District 1\Projects\D132320\CADData\Design\D132320-ebridge.dgn

USER NAME = diazia	DESIGNED -	REVISED -	
	DRAWN -	REVISED -	
PLOT SCALE = 100.0000 ' / in.	CHECKED -	REVISED -	
PLOT DATE = 12/6/2019	DATE -	REVISED -	

STATE OF ILLINOIS
DEPARTMENT OF TRANSPORTATION

EXISTING DECK PLAN
SN: 016-1504

SCALE: | SHEET OF SHEETS | STA. TO STA.

VAR. RTE.	SECTION	COUNTY	TOTAL SHEETS	SHEET NO.
VAR.	2019-155-BR	VARIOUS	107	43
		CONTRACT NO. 62K32		
	ILLINOIS	FED. AID PROJECT		

FOR INFORMATION ONLY

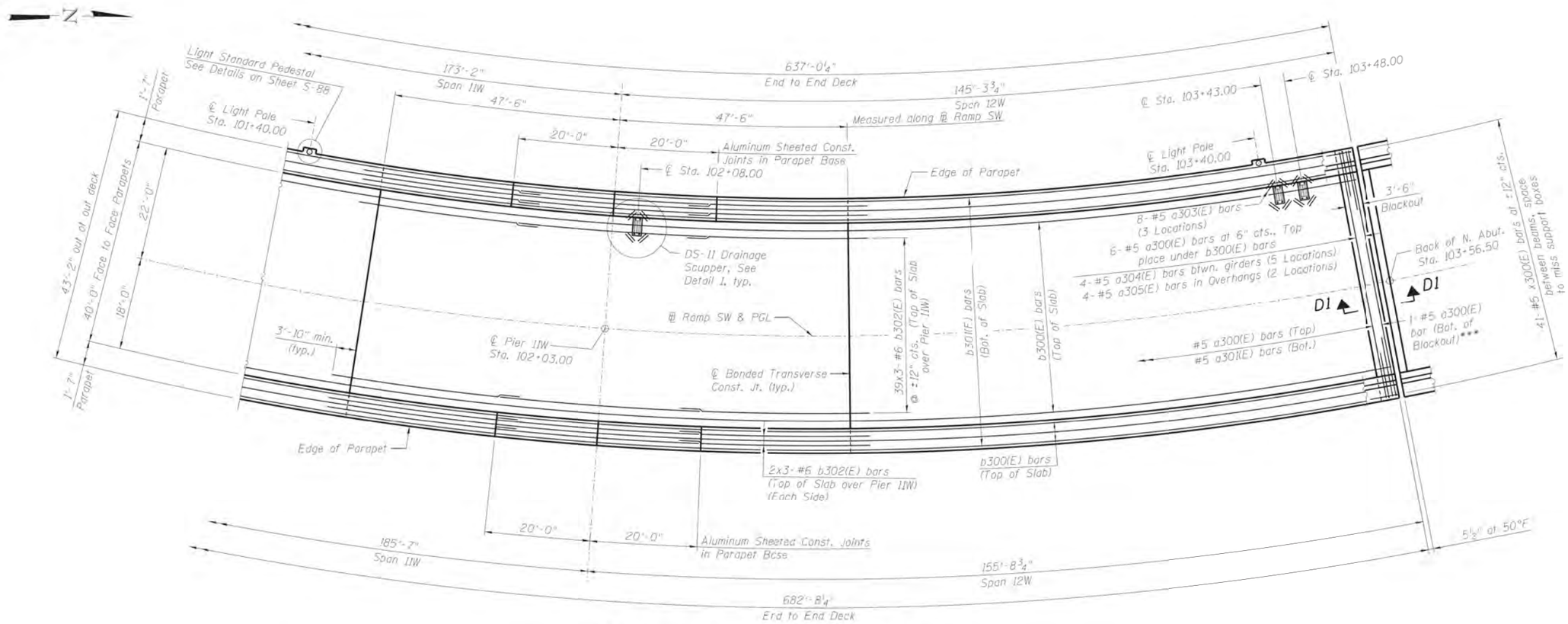

DECK PLAN VIII - S.N. 016-1504 (UNIT 2)

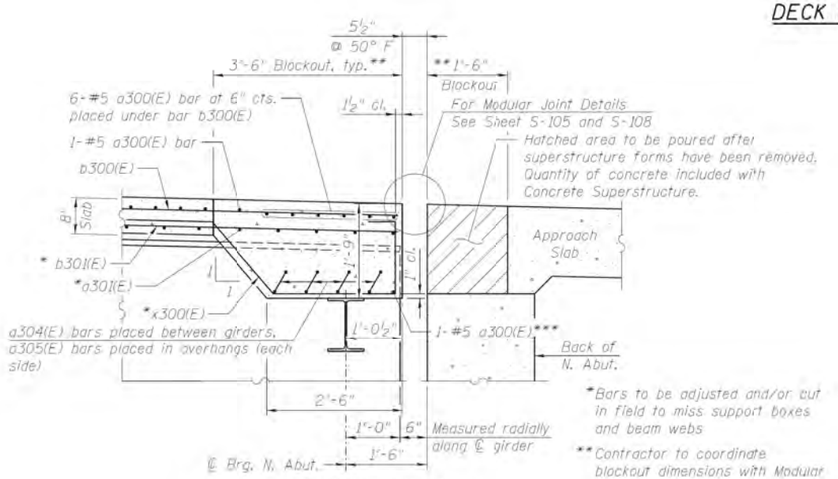

SECTION D1-D1

*Bars to be adjusted and/or cut in field to miss support boxes and beam webs

**Contractor to coordinate blockout dimensions with Modular Joint Manufacturer

***Cut to fit between girders and in overhangs

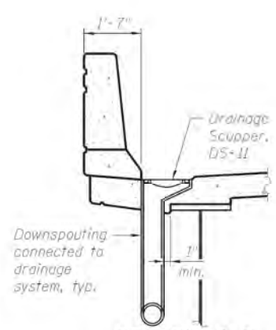

SECTION D-D

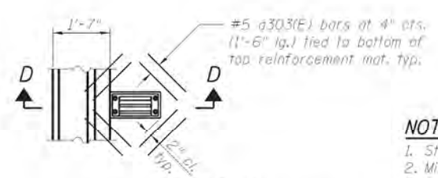

DETAIL 1
DRAINAGE SCUPPER DS-11

Note:
Reinforcement bars designated (E) shall be epoxy coated. Cut longitudinal reinforcement to clear drainage scuppers.

NOTES:

1. Stations are along ⊞ Ramp SW & PGL unless noted otherwise.
2. Minimum lap for #5 bars shall be 3'-3" and for #6 bars shall be 3'-10".
3. Bars indicated thus 41x12-#5 etc. indicates 41 lines of bars with 12 lengths per line.
4. Bend longitudinal reinforcement bars as required to fit in the field.
5. Transverse Bars placed radially and spaced along ⊞ Ramp SW.
6. See Sheet S-81 for parapet reinforcement.
7. See Sheet S-87 for deck cross section.
8. See Sheet S-88 for light pole foundation details.
9. See Sheet S-88 for superstructure details and Bill of Material.
10. See Sheet S-94 for Deck Pouring Sequence.
11. See Sheet S-111 for DS-11 Drainage Supper.

MODEL: Default
FILE NAME: pw:\\illinois.dot.illinois.gov:PWIDOT\Documents\IDOT Offices\District 1\Projects\D132320\CADData\Design\D132320-eExhdge.dgn

USER NAME = diazia	DESIGNED -	REVISED -	
	DRAWN -	REVISED -	
PLOT SCALE = 100.0000 ' / in.	CHECKED -	REVISED -	
PLOT DATE = 12/6/2019	DATE -	REVISED -	

STATE OF ILLINOIS
DEPARTMENT OF TRANSPORTATION

EXISTING DECK PLAN
SN: 016-1504

SCALE: | SHEET OF SHEETS | STA. TO STA.

VAR. RTE.	SECTION	COUNTY	TOTAL SHEETS	SHEET NO.
VAR.	2019-155-BR	VARIOUS	107	44
		CONTRACT NO. 62K32		
		ILLINOIS FED. AID PROJECT		

FOR INFORMATION ONLY

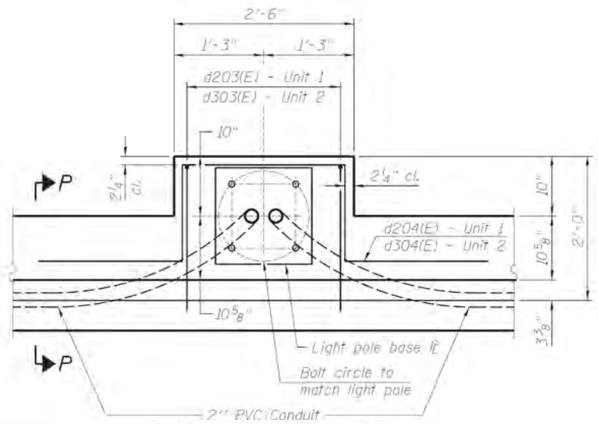

PLAN AT LIGHT POLE

Note:
Cost of anchor rods is included with Concrete Superstructure.

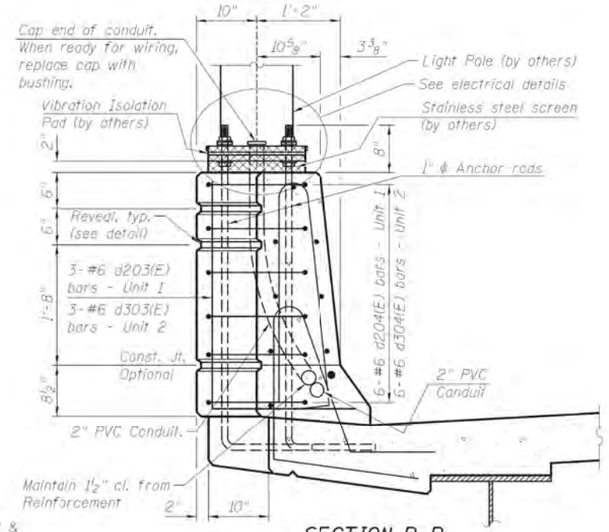

SECTION P-P

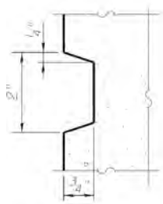

REVEAL DETAIL

NOTE:
See Sheet S-89 for Drainage Scupper Reinforcement Plan.

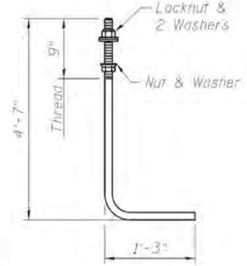

ANCHOR ROD

Diameter as specified for light poles. (ASTM F 1554 Grade 105) Full length hot dipped galvanized.

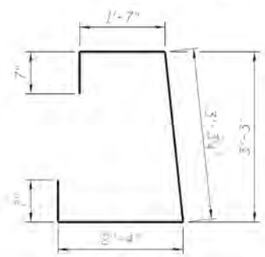

BAR d206(E)

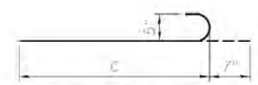

BARS a203(E), a205(E)

Bar	C
a203(E)	23'-10"
a205(E)	14'-8"

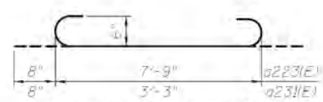

BARS a223(E) & a231(E)

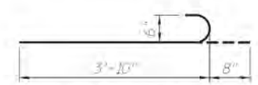

BAR a224(E)

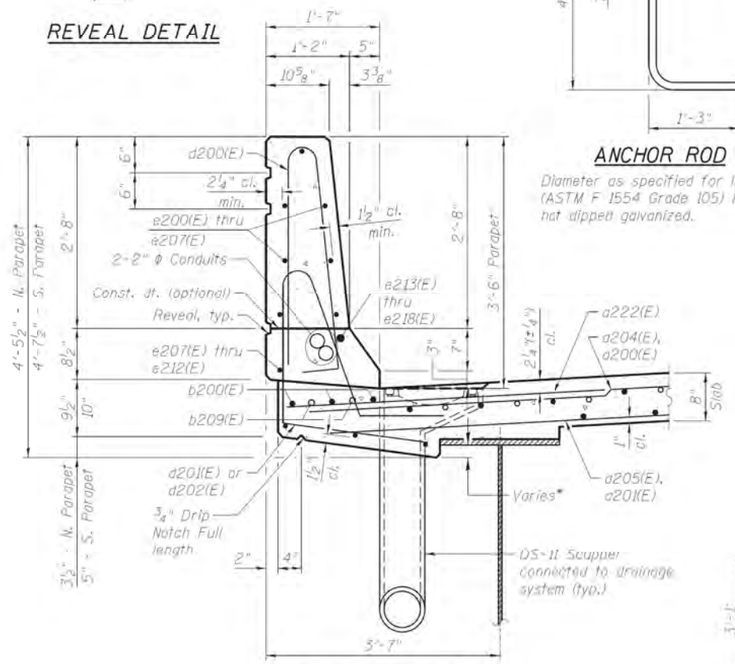

SECTION THRU PARAPET

* ¼" min. to 2⅝" max. (N. Parapet)
¼" min. to 2½" max. (S. Parapet)

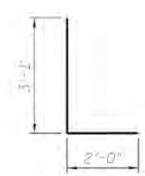

BAR d203(E)

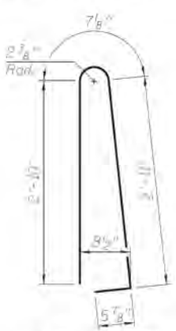

BAR d200(E)

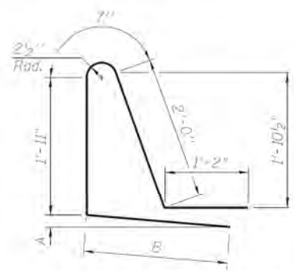

BAR d201(E) & d202(E)

A & B DIMENSIONS

Bar	A	B
d201(E)	3½"	2'-3"
d202(E)	5"	2'-5"

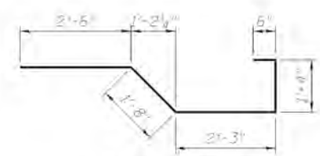

BAR x200(E)

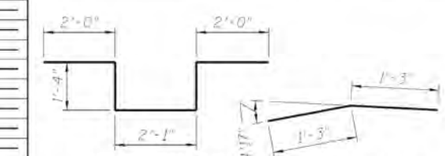

BAR d204(E)

BAR d207(E)

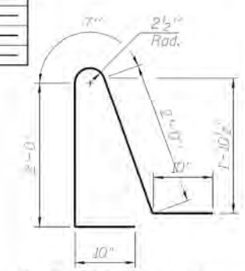

BAR d205(E) ALT

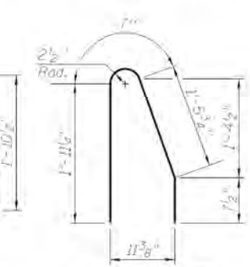

BAR d205(E)

SUPERSTRUCTURE BILL OF MATERIAL - S.N. 016-1504 (UNIT 1)

Bar	No.	Size	Length	Shape
a200(E)	503	#5	31'-3"	
a201(E)	368	#5	30'-10"	
a202(E)	791	#5	23'-10"	
a203(E)	580	#5	24'-5"	
a204(E)	805	#5	15'-2"	
a205(E)	580	#5	15'-3"	
a206(E)	108	#5	19'-8"	
a207(E)	79	#5	14'-8"	
a208(E)	63	#5	21'-8"	
a209(E)	47	#5	16'-8"	
a210(E)	63	#5	22'-2"	
a211(E)	47	#5	19'-2"	
a212(E)	70	#5	24'-8"	
a213(E)	51	#5	21'-6"	
a214(E)	108	#5	18'-0"	
a215(E)	79	#5	22'-0"	
a216(E)	63	#5	19'-0"	
a217(E)	47	#5	23'-5"	
a218(E)	63	#5	23'-6"	
a219(E)	47	#5	25'-11"	
a220(E)	70	#5	25'-6"	
a221(E)	51	#5	27'-5"	
a222(E)	1582	#6	6'-6"	
a223(E)	60	#6	9'-1"	
a224(E)	24	#6	4'-6"	
a225(E)	8	#5	25'-0"	
a226(E)	8	#5	22'-0"	
a227(E)	6	#5	29'-5"	
a228(E)	6	#5	17'-8"	
a229(E)	40	#5	1'-6"	
a230(E)	14	#5	7'-8"	
a231(E)	16	#6	4'-7"	
a232(E)	1582	#5	11'-10"	
a233(E)	14	#5	27'-10"	
b200(E)	220	#5	34'-6"	
b201(E)	275	#5	36'-0"	
b202(E)	288	#5	29'-3"	
b203(E)	155	#5	31'-3"	
b204(E)	6	#5	34'-3"	
b205(E)	10	#5	37'-4"	
b206(E)	9	#5	33'-10"	
b207(E)	8	#5	36'-8"	
b208(E)	2	#5	33'-6"	
b209(E)	108	#6	30'-2"	
b210(E)	144	#6	31'-2"	
b211(E)	198	#6	32'-2"	
b212(E)	192	#5	31'-11"	
b213(E)	288	#5	33'-2"	
b214(E)	300	#5	26'-8"	
b215(E)	90	#5	27'-1"	
b216(E)	28	#5	34'-5"	
b217(E)	48	#5	27'-7"	
b218(E)	2	#5	36'-9"	
b219(E)	42	#5	28'-3"	
b220(E)	2	#5	29'-3"	

Bar	No.	Size	Length	Shape
d200(E)	889	#5	6'-10"	
d201(E)	370	#5	7'-11"	
d202(E)	407	#5	8'-1"	
d203(E)	6	#6	5'-1"	
d204(E)	12	#6	8'-9"	
d205(E)	8	#5	4'-7½"	
d206(E)	8	#5	8'-4"	
d207(E)	4	#5	2'-6"	
e200(E)	28	#4	14'-4"	
e201(E)	70	#4	15'-9"	
e202(E)	7	#4	16'-7"	
e203(E)	7	#4	16'-8"	
e204(E)	105	#4	17'-3"	
e205(E)	7	#4	17'-7"	
e206(E)	7	#4	18'-11"	
e207(E)	64	#4	19'-9"	
e208(E)	4	#4	23'-9"	
e209(E)	5	#4	26'-0"	
e210(E)	3	#4	28'-7"	
e211(E)	6	#4	27'-1"	
e212(E)	4	#4	27'-7"	
e213(E)	4	#8	26'-2"	
e214(E)	8	#8	19'-9"	
e215(E)	5	#8	28'-6"	
e216(E)	3	#8	30'-9"	
e217(E)	6	#8	29'-3"	
e218(E)	4	#8	30'-0"	
e219(E)	10	#4	3'-5"	
e220(E)	1	#4	3'-7"	
e221(E)	2	#8	3'-5"	
x200(E)	128	#5	8'-3"	
Reinforcement Bars, Epoxy Coated			Pound	251,090
Concrete Superstructure			Cu. Yd.	820.1
Bridge Deck Grooving (Longitudinal)			Sq. Yd.	2,700
Protective Coat			Sq. Yd.	3,145

MODEL: Default
FILE NAME: pw:\\pbnaeom.dot.illinois.gov:PWIDOT\Documents\IDOT Offices\District 1\Projects\D132320\CADData\Design\D132320-erRdge.dgn

USER NAME = diazia	DESIGNED -	REVISED -	
	DRAWN -	REVISED -	
PLOT SCALE = 100.0000 ' / in.	CHECKED -	REVISED -	
PLOT DATE = 12/6/2019	DATE -	REVISED -	

STATE OF ILLINOIS
DEPARTMENT OF TRANSPORTATION

EXISTING CROSS SECTION
SN: 016-1504

SCALE: SHEET OF SHEETS STA. TO STA.

VAR. RTE.	SECTION	COUNTY	TOTAL SHEETS	SHEET NO.
VAR.	2019-155-BR	VARIOUS	107	45
		CONTRACT NO. 62K32		
	ILLINOIS	FED. AID PROJECT		

FOR INFORMATION ONLY

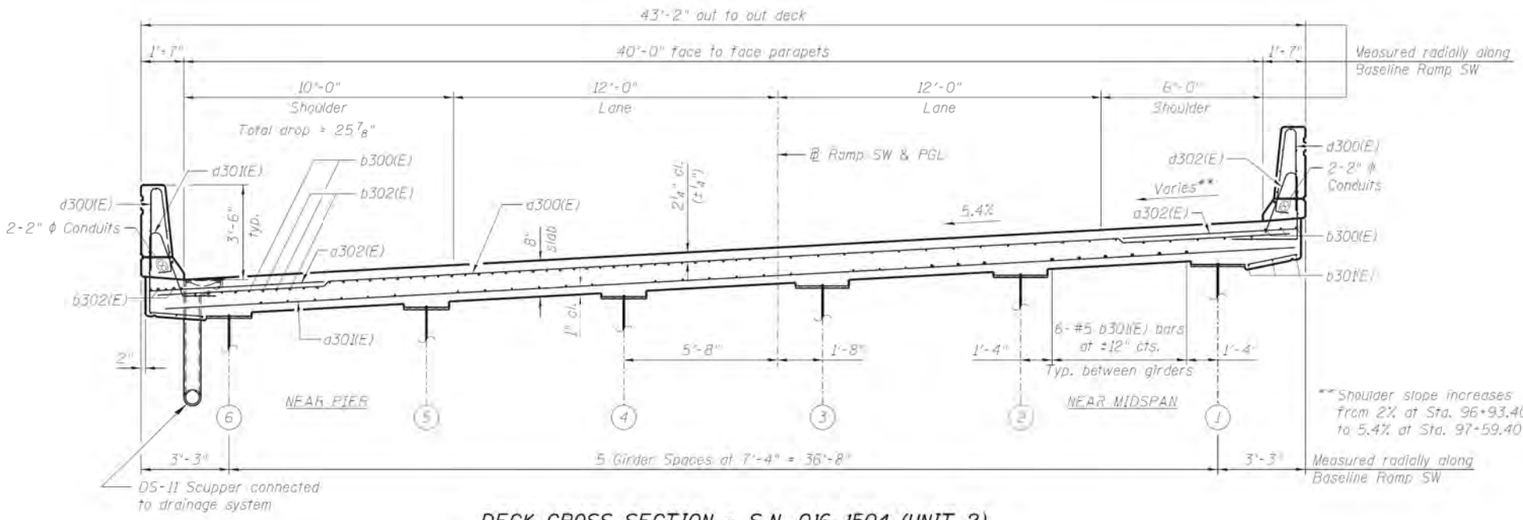

DECK CROSS SECTION - S.N. 016-1504 (UNIT 2)

(Looking North)

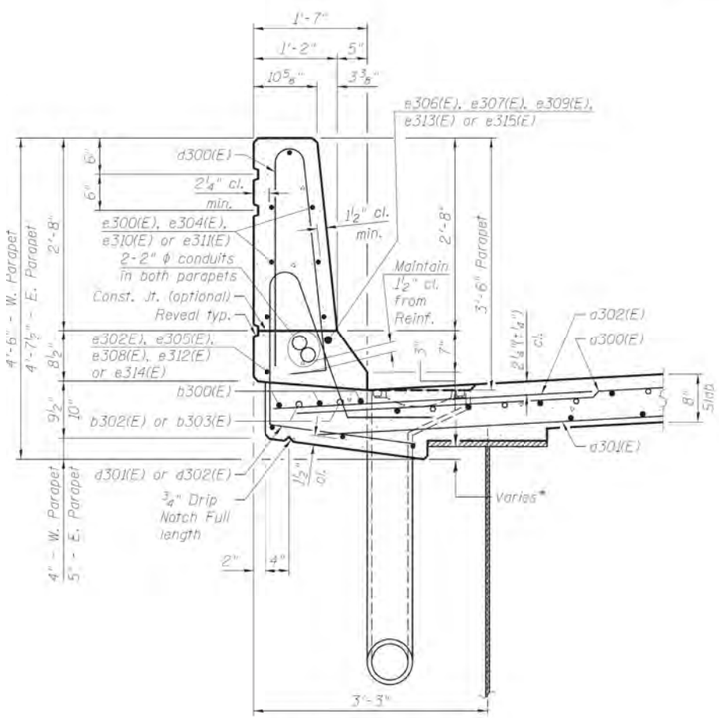

SECTION THRU PARAPET

* Varies: ¼" min. to 3¾" max. (E. Parapet)
¼" min. to 2 7/8" max. (W. Parapet)

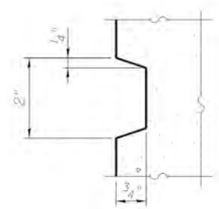

REVEAL DETAIL

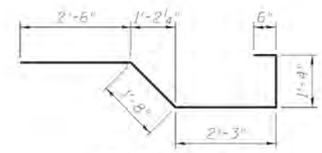

BAR x300(E)

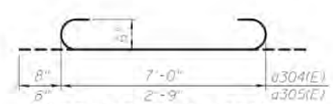

BARS a304(E) & a305(E)

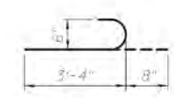

BAR a306(E)

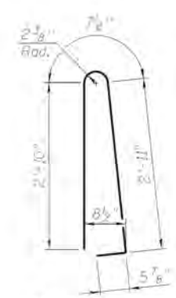

BAR d300(E)

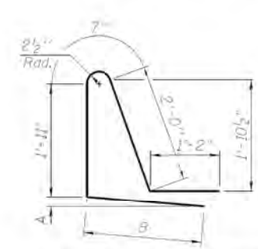

BAR d301(E) & d302(E)

A & B DIMENSIONS

Bar	A	B
d301(E)	4½"	1'-11"
d302(E)	2"	2'-0"

BAR d303(E)

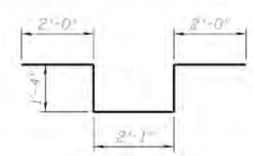

BAR d304(E)

SUPERSTRUCTURE BILL OF MATERIAL S.N. 016-1504 (UNIT 2)

Bar	No.	Size	Length	Shape
a300(E)	1319	#5	42'-5"	
a301(E)	930	#5	41'-6"	
a302(E)	2646	#6	6'-6"	
a303(E)	32	#5	1'-6"	
a304(E)	40	#6	8'-4"	
a305(E)	16	#6	4'-1"	
a306(E)	8	#6	4'-0"	
a307(E)	13	#5	28'-7"	
a308(E)	13	#5	13'-11"	
b300(E)	1196	#5	29'-5"	
b301(E)	972	#5	28'-5"	
b302(E)	387	#6	37'-9"	
d300(E)	1601	#5	6'-10"	
d301(E)	696	#6	7'-8"	
d302(E)	745	#5	7'-6"	
d303(E)	12	#6	5'-1"	
d304(E)	24	#6	8'-9"	
e300(E)	168	#4	17'-4"	
e301(E)	14	#4	19'-3"	
e302(E)	96	#4	19'-9"	
e303(E)	98	#4	16'-6"	
e304(E)	14	#4	15'-8"	
e305(E)	10	#4	26'-8"	
e306(E)	10	#8	29'-2"	
e307(E)	121	#8	19'-9"	
e308(E)	12	#4	25'-6"	
e309(E)	12	#8	28'-2"	
e310(E)	28	#4	14'-10"	
e311(E)	28	#4	13'-11"	
e312(E)	10	#4	28'-9"	
e313(E)	10	#8	31'-3"	
e314(E)	12	#4	25'-11"	
e315(E)	12	#8	28'-7"	
x300(E)	82	#5	8'-3"	
Reinforcement Bars, Epoxy Coated			Pound	252,950
Concrete Superstructure			Cu. Yd.	983.8
Bridge Deck Grooving (Longitudinal)			Sq. Yd.	2,784
Protective Coat			Sq. Yd.	3,599

NOTE:

See Sheet No. S-88 for Light Pole Foundation Plan and Section.

MODEL: Default
FILE NAME: pw:\\planroom.dot.illinois.gov:PWIDOT\Documents\IDOT Offices\District 1\Projects\D132320\CADData\Design\D132320-structure.dgn

USER NAME = diazla	DESIGNED -	REVISED -	
	DRAWN -	REVISED -	
PLOT SCALE = 100.0000 ' / in.	CHECKED -	REVISED -	
PLOT DATE = 12/6/2019	DATE -	REVISED -	

STATE OF ILLINOIS
DEPARTMENT OF TRANSPORTATION

EXISTING CROSS SECTION
SN: 016-1504

SCALE: | SHEET OF SHEETS | STA. TO STA.

VAR. RTE.	SECTION	COUNTY	TOTAL SHEETS	SHEET NO.
VAR.	2019-155-BR	VARIOUS	107	46
		CONTRACT NO. 62K32		

ILLINOIS | FED. AID PROJECT

FOR INFORMATION ONLY

Bench Mark: BM-4, chiseled square on NE corner of crashwall at existing Pier E20, just East of Moe Drive, on existing S.N. 016-1075 carrying NB I-55 to NB L.S.D., Elev. 594.65 (NAVD 88).

Existing Structure: S.N. 016-1048 was built in 1965 & carries NB Lake Shore Drive traffic to SB I-55 over Moe Drive, Lake Shore Drive, & S.N. 016-1075 (NB I-55 to NB Lake Shore Drive).
(no salvaging) The 2102'-5" long structure has 13-curved spans, 15-tangent spans, & a 149'-6" south terminal structure. Curved spans consist of 2x77.70', 77.41', 79.26', 73.02', 79.91', 70.02', 97.49', 34.42', 75', 2x79', & 78'. Tangent spans consist of 5-units of 3x65'. The out-to-out deck width varies from 28'-3" (Spans 1-13) to 27'-3" (Spans 14-28). The structure uses 54" steel plate girders (Spans 1-4), 48" steel plate girders (Spans 5-13), & W33 steel wide flange beams (Spans 14-28) composite with a 7.5" concrete deck. Substructures use 2-column concrete piers & concrete caissons drilled into rock. It was rehabilitated in 1975 (deck repair, exp. joint replacement, & steel repainting), 1990 (bearing replacement), 1994 (deck repair, exp. joint replacement, & pier repair), 1996 (pier repair), 2002 (steel repainting), 2005 (pier repair), and 2008 (deck repair).

Traffic Control: For Stage Ia, maintain 1 lane of NW traffic on north & east halves of existing S.N. 016-1048 during construction of Spans 13W-20W (Units 1-3) & west half of Spans 21W-22W (Unit 4) of proposed S.N. 016-1505. For Stage Ib, continue to maintain 1-lane of NW traffic on north & east halves of existing S.N. 016-1048 during construction of south half of Spans 1W-5W of proposed S.N. 016-1501, south 1/3 of Spans 6W-8W of proposed S.N. 016-1504 (Unit 1), & east half of Spans 10W-12W of proposed S.N. 016-1504 (Unit 2). Note that NW traffic shall merge with SW traffic for special events at McCormick Place & Soldier Field in Stage Ib. For Stage IIa, shift 1-lane of NW traffic onto south & west halves of proposed S.N. 016-1505 during construction of center 1/3 of Spans 6W-8W of proposed S.N. 016-1504 (Unit 1), Span 9W & west half of Spans 10W-12W of proposed S.N. 016-1504 (Unit 2), & east half of Spans 21W-22W of proposed S.N. 016-1505 (Unit 4). For Stage IIb, maintain 1-lane of NW traffic on proposed S.N. 016-1505 or maintain 2-lanes on proposed S.N. 016-1505, then merge them before proposed S.N. 016-1504 during construction of north half of Spans 1W-5W of proposed S.N. 016-1501 & north 1/3 of Spans 6W-8W of proposed S.N. 016-1504 (Unit 1). Temporary lane closures may be required for Moe Drive, Lake Shore Drive, Fort Dearborn Drive, & existing S.N. 016-1075.

EXISTING GROUND & ESTIMATED BEDROCK ELEVATION TABLE

Pier	NE. T/Gr.	SW. T/Gr.	T/Shaft	T/Rock
8W	590.45	590.40	588.50	520.00
12W	590.75	590.65	586.00	515.25
13W	590.50	590.45	585.00	521.25
14W	594.20	594.15	587.50	523.25
15W	587.40	588.30	580.00	525.25
16W	592.95	592.10	585.00	521.75
17W	591.55	591.25	585.00	523.25
18W	591.30	590.80	585.00	522.25
19W	590.75	590.80	585.00	524.25
20W	590.70	590.95	585.00	523.50
S.Ab.	N/A	N/A	596.48	519.50

DS-11 SCUPPER TABLE

ID	Station	Offset
1	397+08.93	18'-0" (Lt.)
2	397+75.43	22'-0" (Rt.)
3	397+95.43	22'-0" (Rt.)
4	398+35.43	22'-0" (Rt.)
5	398+40.43	22'-0" (Rt.)
6	399+61.93	22'-0" (Rt.)
7	399+66.93	22'-0" (Rt.)
8	405+59.93	22'-0" (Rt.)
9	405+64.93	22'-0" (Rt.)
10	406+91.43	22'-0" (Rt.)
11	408+12.93	22'-0" (Rt.)
12	408+17.93	22'-0" (Rt.)
13	409+79.43	22'-0" (Rt.)
14	411+34.43	22'-0" (Rt.)
15	411+39.43	22'-0" (Rt.)

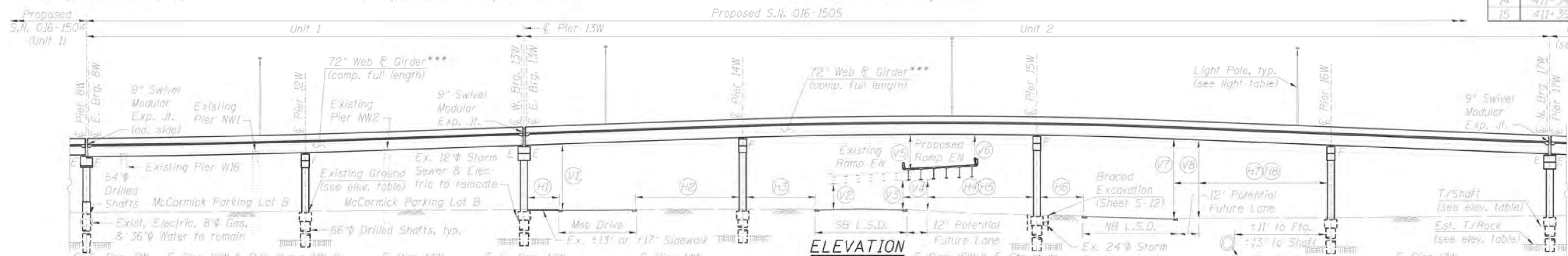

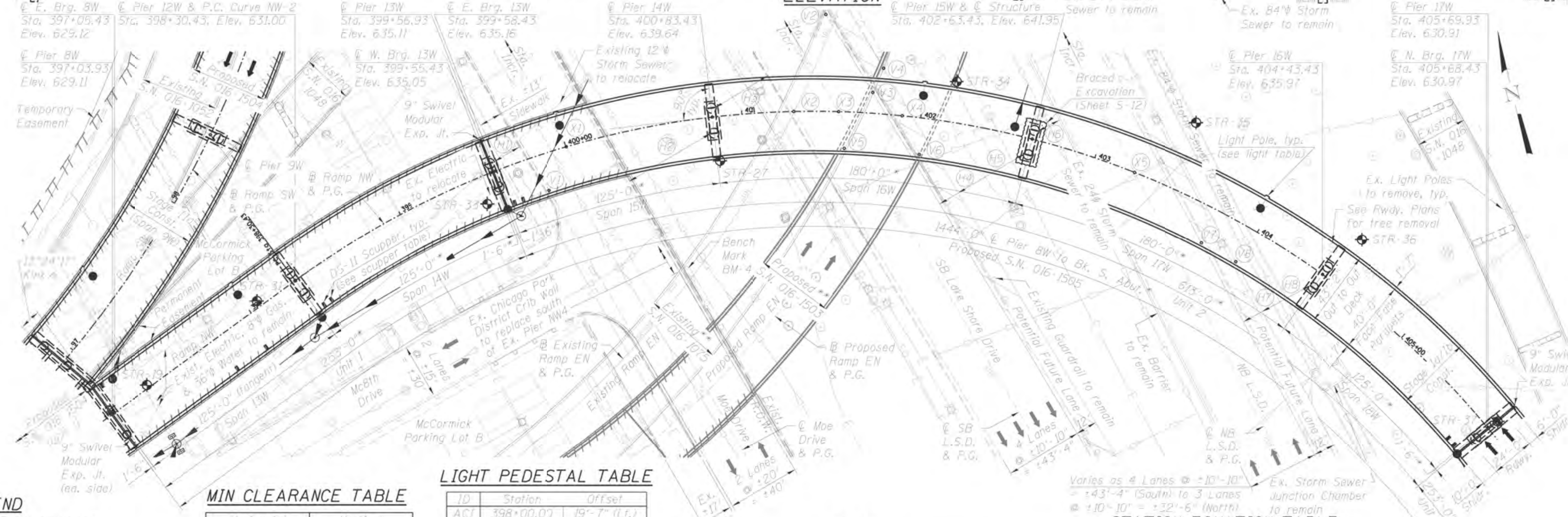

PLAN

*Measured along the ℘ Ramp NW (S.N. 016-1505) with all abutments and piers radial to alignment.

**Existing S.N. 016-1075 (Ramp EN) to be replaced by proposed S.N. 016-1503 with Contract 60X07.

***All girders to be thermally-sprayed (metalized) & all cross frames to be hot-dipped galvanized.

LEGEND

—A—A—	Exist. Aerial Line
—E—E—	Exist. Electric Line
—X—X—	Exist. Fence
—FO—FO—	Exist. Fiber Optic Line
—G—G—	Exist. Gas Line
⊓ ⊓ ⊓ ⊓	Exist. Guardrail
—◁—◁—	Exist. Storm Sewer
—W—W—	Exist. Water Line
⯐ STR-19	Soil Boring Location

MIN CLEARANCE TABLE

Horizontal		Vertical	
H1	17'-5"	V1	38'-4"
H2	52'-0"	V2	13'-11"
H3	34'-7"	V3	15'-4"
H4	53'-0"	V4	15'-1"
H5	41'-0"	V5	16'-8"
H6	14'-5"	V6	15'-3"
H7	40'-5"	V7	43'-3"
H8	28'-5"	V8	42'-6"

LIGHT PEDESTAL TABLE

ID	Station	Offset
AC1	398+00.00	19'-7" (Lt.)
AD1	400+00.00	19'-7" (Lt.)
AC2	402+00.00	19'-7" (Lt.)
AD2	403+95.00	19'-7" (Lt.)
AC3	406+00.00	19'-7" (Lt.)
AD3	408+15.00	19'-7" (Lt.)
AC4	410+45.00	19'-7" (Lt.)

Aluminum light poles have a 10"φ (15"φ bolt circle), possess height of 45', support 6-8' mast arms, & are mounted on the parapets.

STATION EQUATION TABLE

Sta. Eqn.	Upper Roadway Alignment	Upper Roadway Station	Lower Roadway Alignment	Lower Roadway Station
X1	℘ Ramp NW	400+00.28	℄ Moe Dr.	75+58.82
X2	℘ Ramp NW	401+29.50	℘ Ex. Ramp EN	101+57.81
X3	℘ Ramp NW	401+54.15	℄ SB L.S.D	2114+73.01
X4	℘ Ramp NW	401+89.62	℘ Pr. Ramp EN	202+15.77
X5	℘ Ramp NW	403+23.63	℄ NB L.S.D	1113+73.13

MODEL: Default
FILE NAME: pw:\\planroom.dot.illinois.gov:PWIDOT\Documents\IDOT Offices\District 1\Projects\D132320\CADData\Design\D132320-ebridge.dgn

USER NAME = diazia	DESIGNED -	REVISED -	
	DRAWN -	REVISED -	
PLOT SCALE = 100.0000 ' / in.	CHECKED -	REVISED -	
PLOT DATE = 12/9/2019	DATE -	REVISED -	

STATE OF ILLINOIS
DEPARTMENT OF TRANSPORTATION

EXISTING GENERAL PLAN
SN: 016–1505

SCALE: SHEET OF SHEETS STA. TO STA.

VAR. RTE.	SECTION	COUNTY	TOTAL SHEETS	SHEET NO.
VAR.	2019-155-BR	VARIOUS	107	47

CONTRACT NO. 62K32

ILLINOIS FED. AID PROJECT

FOR INFORMATION ONLY

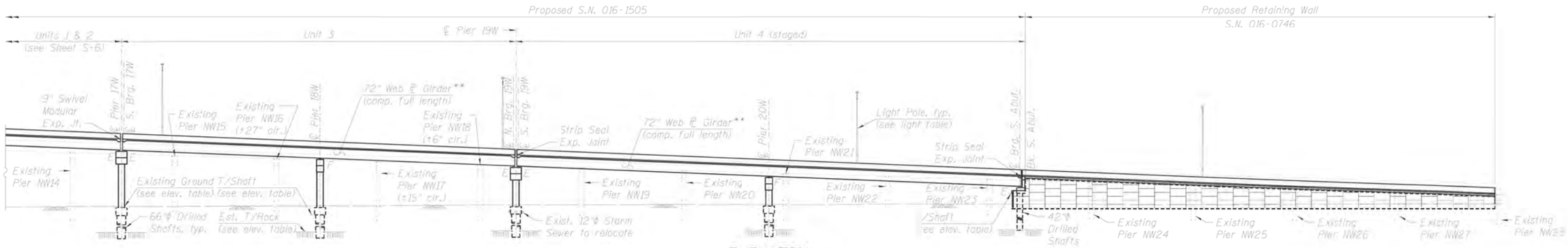

ELEVATION

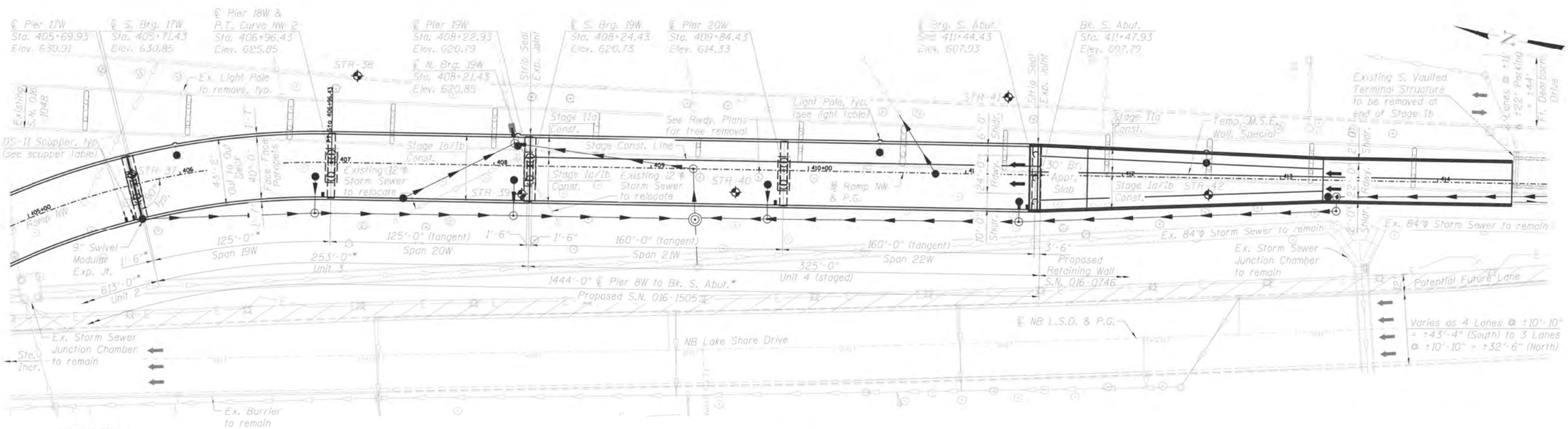

LEGEND

- —A—A— Exist. Aerial Line
- —E—E— Exist. Electric Line
- —X—X— Exist. Fence
- —FO—FO— Exist. Fiber Optic Line
- —G—G— Exist. Gas Line
- Exist. Guardrail
- Exist. Storm Sewer
- —W—W— Exist. Water Line
- STR-37 Soil Boring Location

PLAN

*Measured along the ℙ Ramp NW (S.N. 016-1505) with all abutments and piers radial to alignment.

**All girders to be thermally-sprayed (metallized) & all cross frames to be hot-dipped galvanized.

MODEL: Default
FILE NAME: pw:\\ulanroom.dot.illinois.gov:PWIDOT\Documents\IDOT Offices\District 1\Projects\D132320\CADData\Design\D132320-eturbridge.dgn

USER NAME = diazla	DESIGNED -	REVISED -	
	DRAWN -	REVISED -	
PLOT SCALE = 100.0000 ' / in.	CHECKED -	REVISED -	
PLOT DATE = 12/6/2019	DATE -	REVISED -	

STATE OF ILLINOIS
DEPARTMENT OF TRANSPORTATION

EXISTING DECK PLAN
SN: 016-1505

SCALE: | SHEET OF SHEETS | STA. TO STA.

VAR. RTE.	SECTION	COUNTY	TOTAL SHEETS	SHEET NO.
VAR.	2019-155-BR	VARIOUS	107	48
		CONTRACT NO. 62K32		
		ILLINOIS FED. AID PROJECT		

FOR INFORMATION ONLY

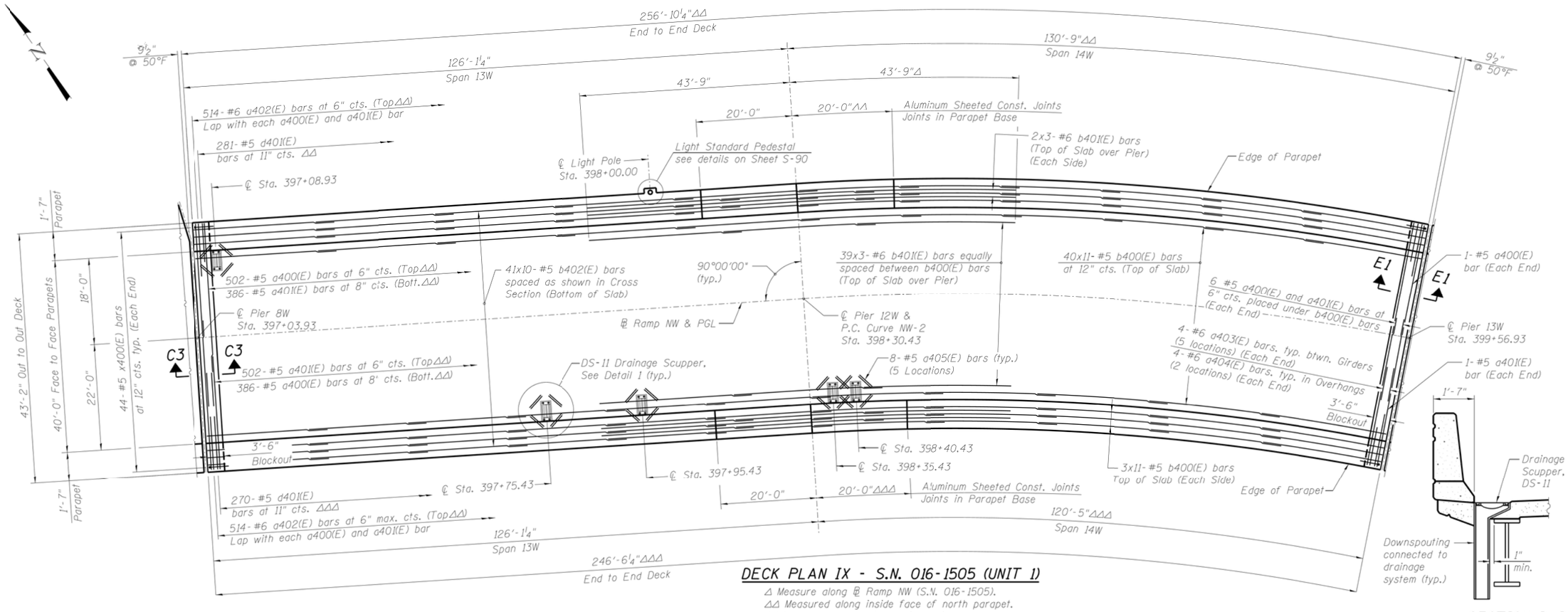

DECK PLAN IX - S.N. 016-1505 (UNIT 1)

Δ Measure along ℄ Ramp NW (S.N. 016-1505).
ΔΔ Measured along inside face of north parapet.
ΔΔΔ Measured along inside face of south parapet.

SECTION D-D

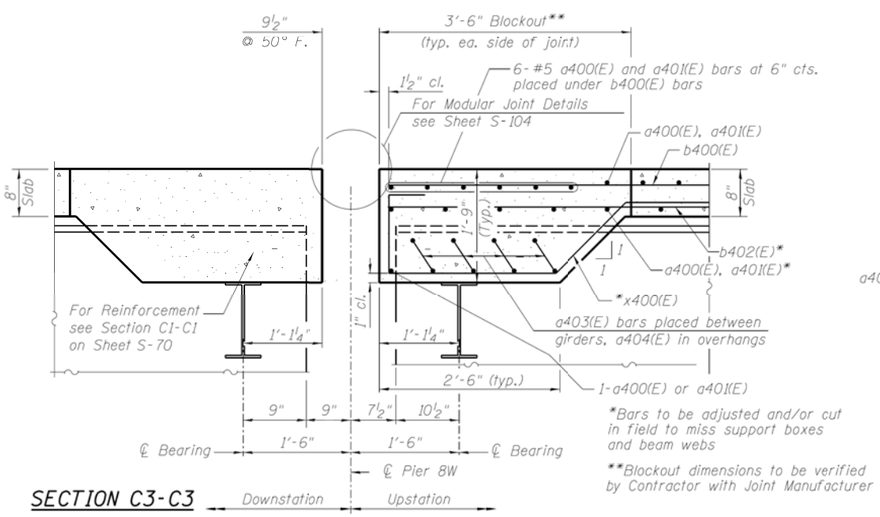

*Bars to be adjusted and/or cut in field to miss support boxes and beam webs

**Blockout dimensions to be verified by Contractor with Joint Manufacturer

SECTION C3-C3

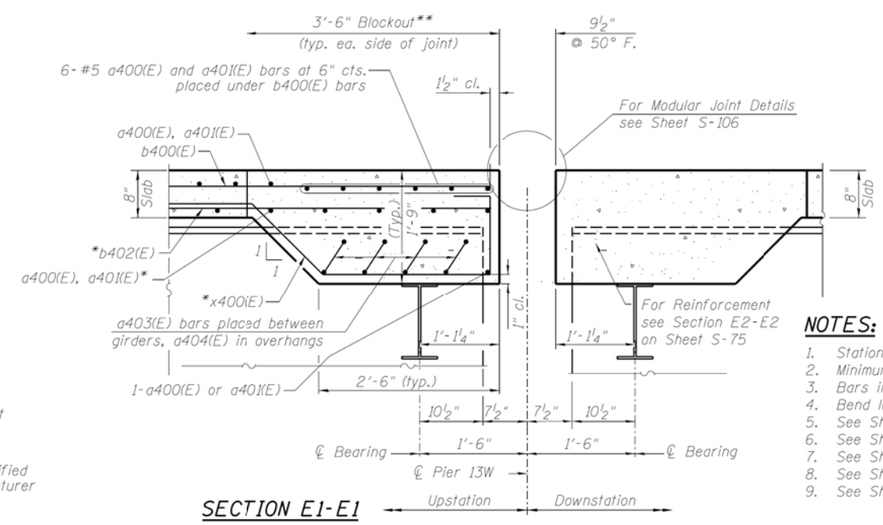

SECTION E1-E1

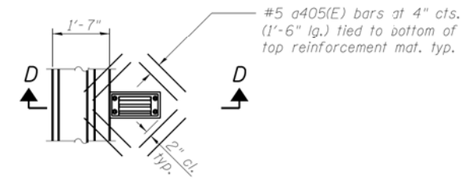

DETAIL 1
DRAINAGE SCUPPER DS-11

Note:
Reinforcement bars designated (E) shall be epoxy coated.
Cut longitudinal reinforcement to clear drainage scuppers.

NOTES:

1. Stations are along ℄ Ramp NW & PGL unless noted otherwise.
2. Minimum lap for #5 bars shall be 3'-3" and for #6 bars shall be 3'-10".
3. Bars indicated 41x12-#5 stc. indicates 41 lines of bars with 12 lengths per line.
4. Bend longitudinal reinforcement bars as required to fit in the field.
5. See Sheet S-82 for parapet reinforcement.
6. See Sheet S-90 for deck cross section.
7. See Sheet S-90 for Bill of Material.
8. See Sheet S-111 for DS-11 Drainage Scupper.
9. See Sheet S-95 for Deck Pouring Sequence.

MODEL: Default
FILE NAME: pw:\\ahnroom.dot.illinois.gov:PWIDOT\Documents\IDOT Offices\District 1\Projects\D132320\CADData\Design\D132320-eprdge.dgn

USER NAME = diazia	DESIGNED -	REVISED -	
	DRAWN -	REVISED -	
PLOT SCALE = 100.0000 ' / in.	CHECKED -	REVISED -	
PLOT DATE = 12/6/2019	DATE -	REVISED -	

STATE OF ILLINOIS
DEPARTMENT OF TRANSPORTATION

EXISTING DECK PLAN
SN: 016-1505

SCALE: | SHEET OF SHEETS | STA. TO STA.

VAR. RTE.	SECTION	COUNTY	TOTAL SHEETS	SHEET NO.
VAR.	2019-155-BR	VARIOUS	107	49
		CONTRACT NO. 62K32		
		ILLINOIS FED. AID PROJECT		

FOR INFORMATION ONLY

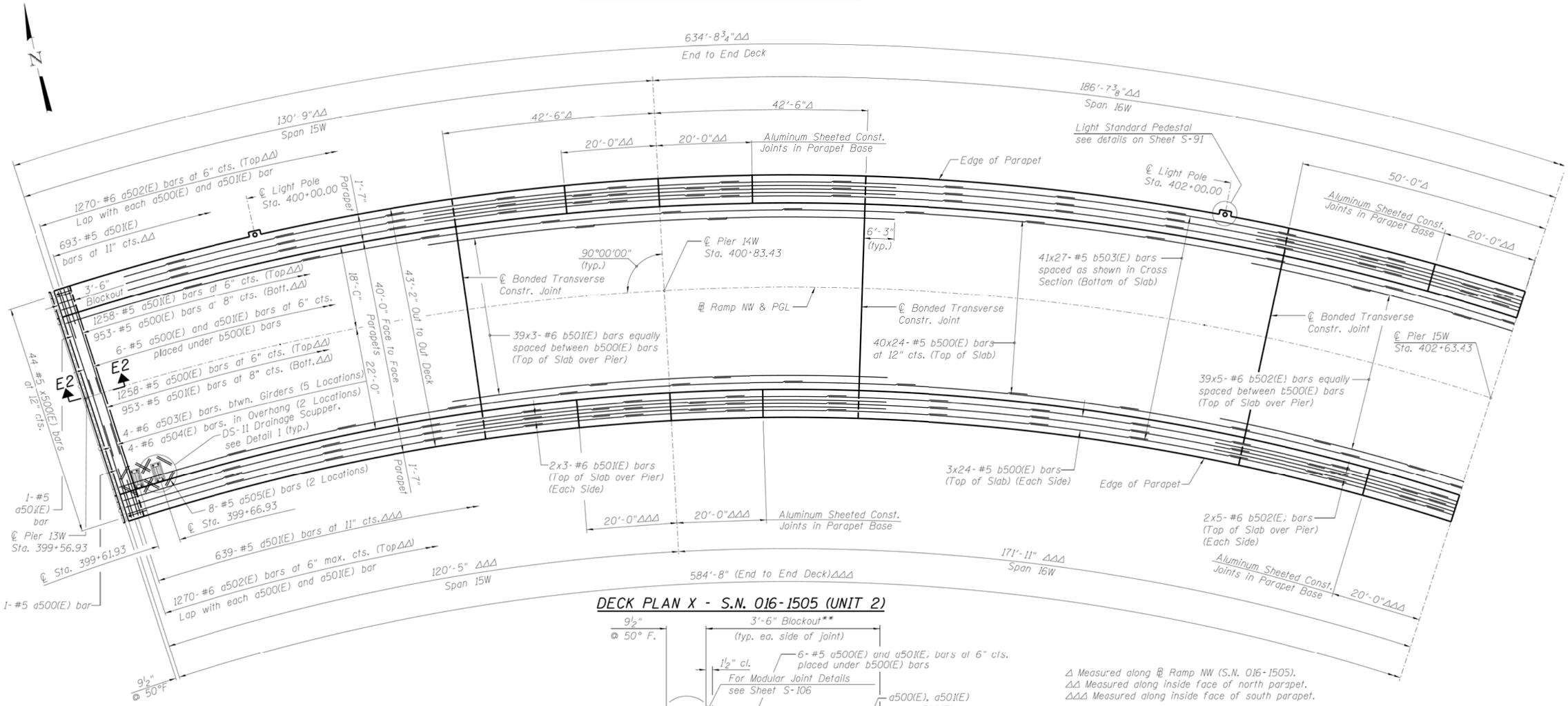

DECK PLAN X - S.N. 016-1505 (UNIT 2)

Δ Measured along ℄ Ramp NW (S.N. 016-1505).
ΔΔ Measured along inside face of north parapet.
ΔΔΔ Measured along inside face of south parapet.

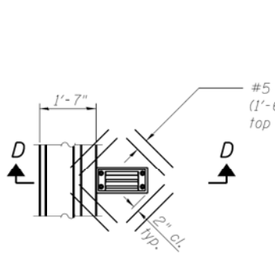

DETAIL 1
DRAINAGE SCUPPER DS-11

Note:
Reinforcement bars designated (E) shall be epoxy coated.
Cut longitudinal reinforcement to clear drainage scuppers.

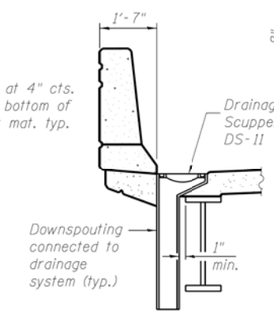

SECTION D-D

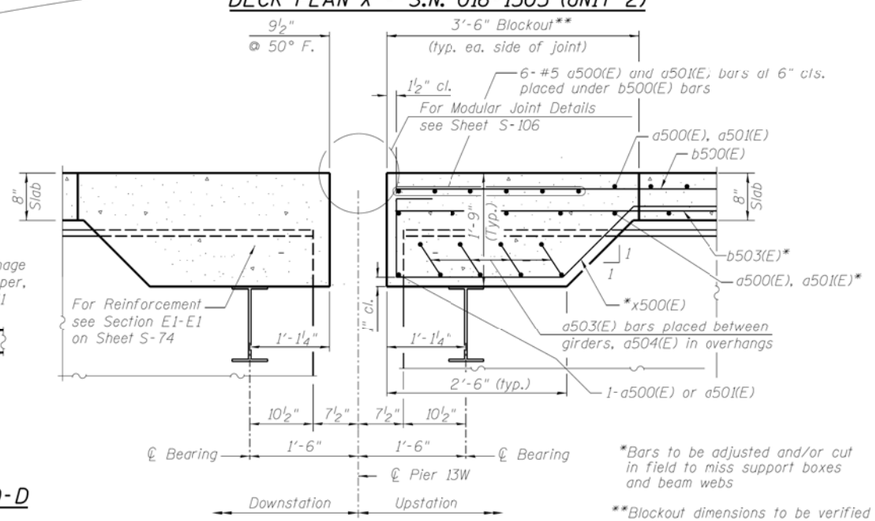

SECTION E2-E2

*Bars to be adjusted and/or cut in field to miss support boxes and beam webs

**Blockout dimensions to be verified by Contractor with Joint Manufacturer

NOTES:

1. Stations are along ℄ Ramp NW & PGL unless noted otherwise.
2. Minimum lap for #5 bars shall be 3'-3" and for #6 bars shall be 3'-10".
3. Bars indicated 41x12-#5 etc. indicates 41 lines of bars with 12 lengths per line.
4. Bend longitudinal reinforcement bars as required to fit in the field.
5. See Sheet S-83 for parapet reinforcement.
6. See Sheet S-91 for deck cross section.
7. See Sheet S-91 for Bill of Material.
8. See Sheet S-111 for DS-11 Drainage Scupper.
9. See Sheet S-95 for Deck Pouring Sequence.

MODEL: Default
FILE NAME: pw:\\planroom.dot.illinois.gov:PWIDOT\Documents\IDOT Offices\District 1\Projects\D132320\CADData\Design\D132320-eorbridge.dgn

USER NAME = diazia	DESIGNED -	REVISED -	
	DRAWN -	REVISED -	
PLOT SCALE = 100.0000 ' / in.	CHECKED -	REVISED -	
PLOT DATE = 12/6/2019	DATE -	REVISED -	

STATE OF ILLINOIS
DEPARTMENT OF TRANSPORTATION

EXISTING DECK PLAN
SN: 016-1505

SCALE: | SHEET OF SHEETS | STA. TO STA.

VAR. RTE.	SECTION	COUNTY	TOTAL SHEETS	SHEET NO.
VAR.	2019-155-BR	VARIOUS	107	50
		CONTRACT NO. 62K32		
		ILLINOIS	FED. AID PROJECT	

FOR INFORMATION ONLY

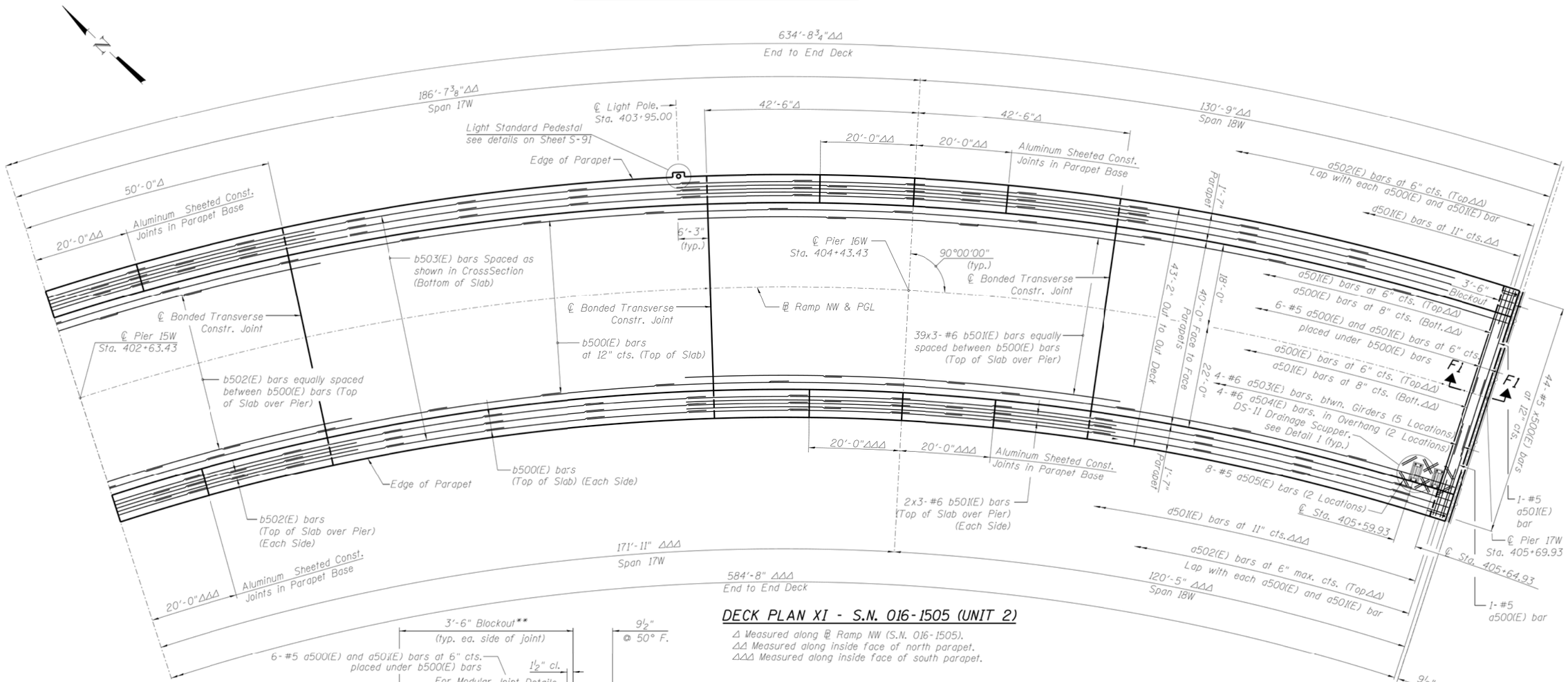

DECK PLAN XI - S.N. 016-1505 (UNIT 2)

Δ Measured along ℄ Ramp NW (S.N. 016-1505).
ΔΔ Measured along inside face of north parapet.
ΔΔΔ Measured along inside face of south parapet.

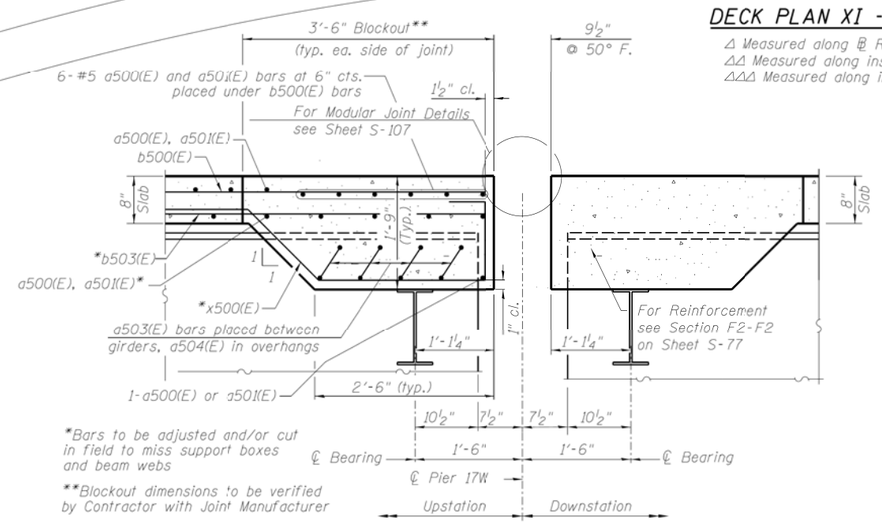

*Bars to be adjusted and/or cut in field to miss support boxes and beam webs

**Blockout dimensions to be verified by Contractor with Joint Manufacturer

SECTION F1-F1

NOTES:

1. Stations are along ℄ Ramp NW & PGL unless noted otherwise.
2. Minimum lap for #5 bars shall be 3'-3" and for #6 bars shall be 3'-10".
3. Bars indicated 41x12-#5 etc. indicates 41 lines of bars with 12 lengths per line.
4. Bend longitudinal reinforcement bars as required to fit in the field.
5. See Sheet S-83 for parapet reinforcement.
6. See Sheet S-91 for deck cross section.
7. See Sheet S-91 for Bill of Material.
8. See Sheet S-75, Detail 1, and S-111 for DS-11 Drainage Scupper.
9. See Sheet S-95 for Deck Pouring Sequence.

MODEL: Default
FILE NAME: pw:\\planroom.dot.illinois.gov:PWIDOT\Documents\IDOT Offices\District 1\Projects\D132320\CADData\Design\D132320-eribridge.dgn

USER NAME = diazia	DESIGNED -	REVISED -	STATE OF ILLINOIS DEPARTMENT OF TRANSPORTATION	EXISTING DECK PLAN SN: 016-1505			VAR. RTE.	SECTION	COUNTY	TOTAL SHEETS / SHEET NO.
	DRAWN -	REVISED -					VAR.	2019-155-BR	VARIOUS	107 / 51
PLOT SCALE = 100.0000 ' / in.	CHECKED -	REVISED -							CONTRACT NO. 62K32	
PLOT DATE = 12/6/2019	DATE -	REVISED -		SCALE:	SHEET OF SHEETS	STA. TO STA.		ILLINOIS	FED. AID PROJECT	

FOR INFORMATION ONLY

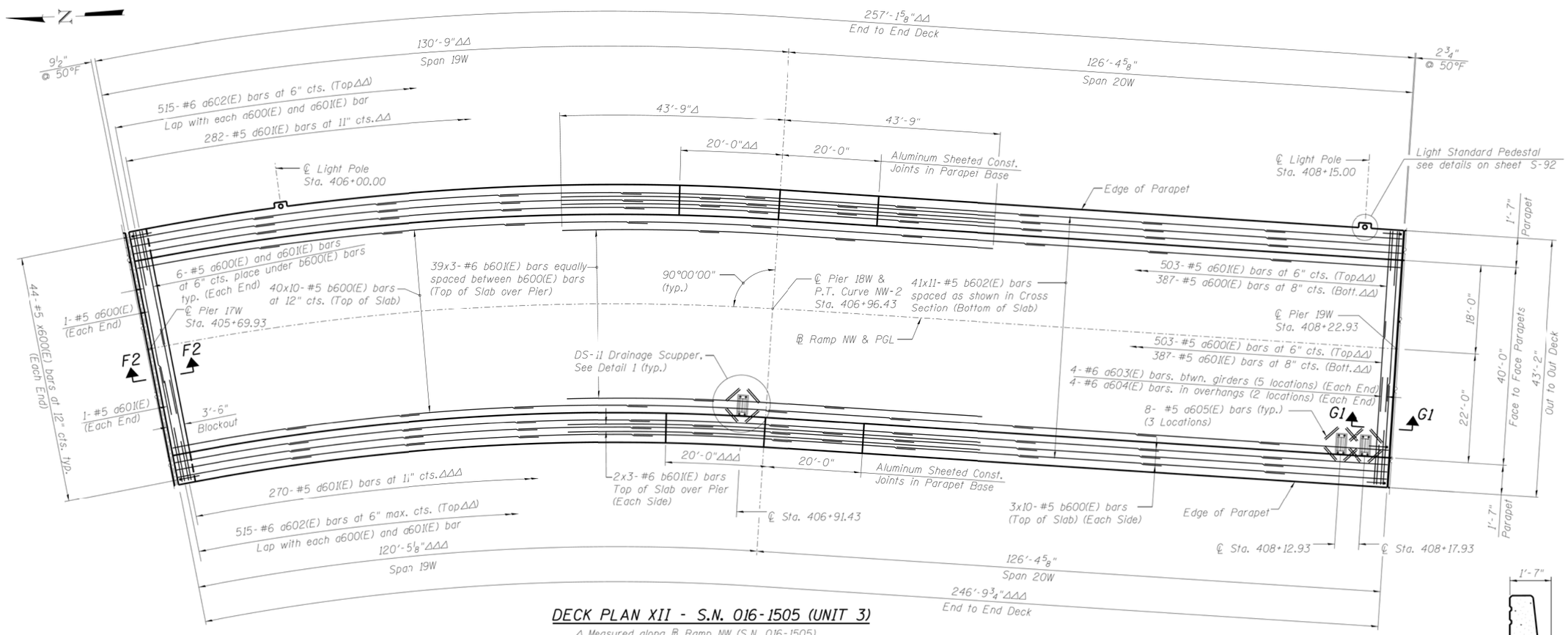

DECK PLAN XII - S.N. 016-1505 (UNIT 3)

Δ Measured along ℄ Ramp NW (S.N. 016-1505).
ΔΔ Measured along inside face of east parapet.
ΔΔΔ Measured along inside face of west parapet.

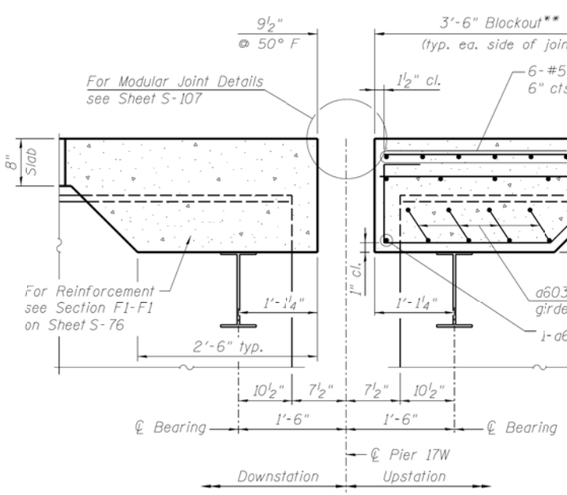

SECTION F2-F2

*Bars to be adjusted and/or cut in field to miss support boxes and beam webs

**Blockout dimensions to be verified by Contractor with Joint Manufacturer

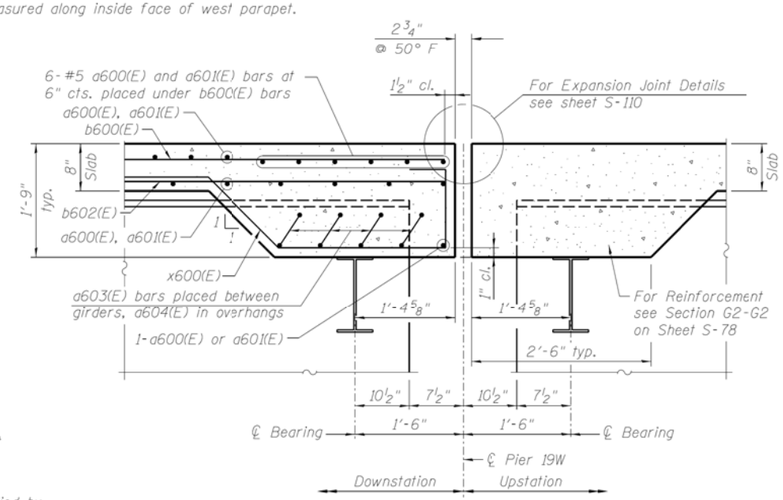

SECTION G1-G1

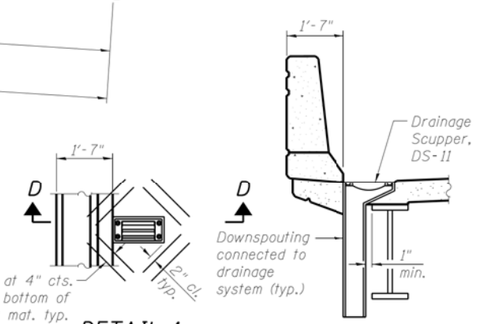

DETAIL 1
DRAINAGE SCUPPER DS-11

SECTION D-D

Note:
Reinforcement bars designated (E) shall be epoxy coated.
Cut longitudinal reinforcement to clear drainage scuppers.

NOTES:

1. Stations are along ℄ Ramp NW & PGL unless noted otherwise.
2. Minimum lap for #5 bars shall be 3'-3" and for #6 bars shall be 3'-10".
3. Bars indicated 41x12-#5 etc. indicates 41 lines of bars with 12 lengths per line.
4. Bend longitudinal reinforcement bars as required to fit in the field.
5. See Sheet S-84 for parapet reinforcement.
6. See Sheet S-92 for deck cross section.
7. See Sheet S-92 for Bill of Material.
8. See Sheet S-111 for DS-11 Drainage Scupper.
9. See Sheet S-95 for Deck Pouring Sequence.

MODEL: Default
FILE NAME: pw:\\dainroom.dot.illinois.gov:PWIDOT\Documents\IDOT Offices\District 1\Projects\D132320\CADData\Design\D132320-eurbdge.dgn

USER NAME = diazia	DESIGNED -	REVISED -	
	DRAWN -	REVISED -	
PLOT SCALE = 100.0000 ' / in.	CHECKED -	REVISED -	
PLOT DATE = 12/6/2019	DATE -	REVISED -	

STATE OF ILLINOIS
DEPARTMENT OF TRANSPORTATION

EXISTING DECK PLAN
SN: 016-1505

SCALE: | SHEET OF SHEETS | STA. TO STA.

VAR. RTE.	SECTION	COUNTY	TOTAL SHEETS	SHEET NO.
VAR.	2019-155-BR	VARIOUS	107	52
		CONTRACT NO. 62K32		
		ILLINOIS	FED. AID PROJECT	

FOR INFORMATION ONLY

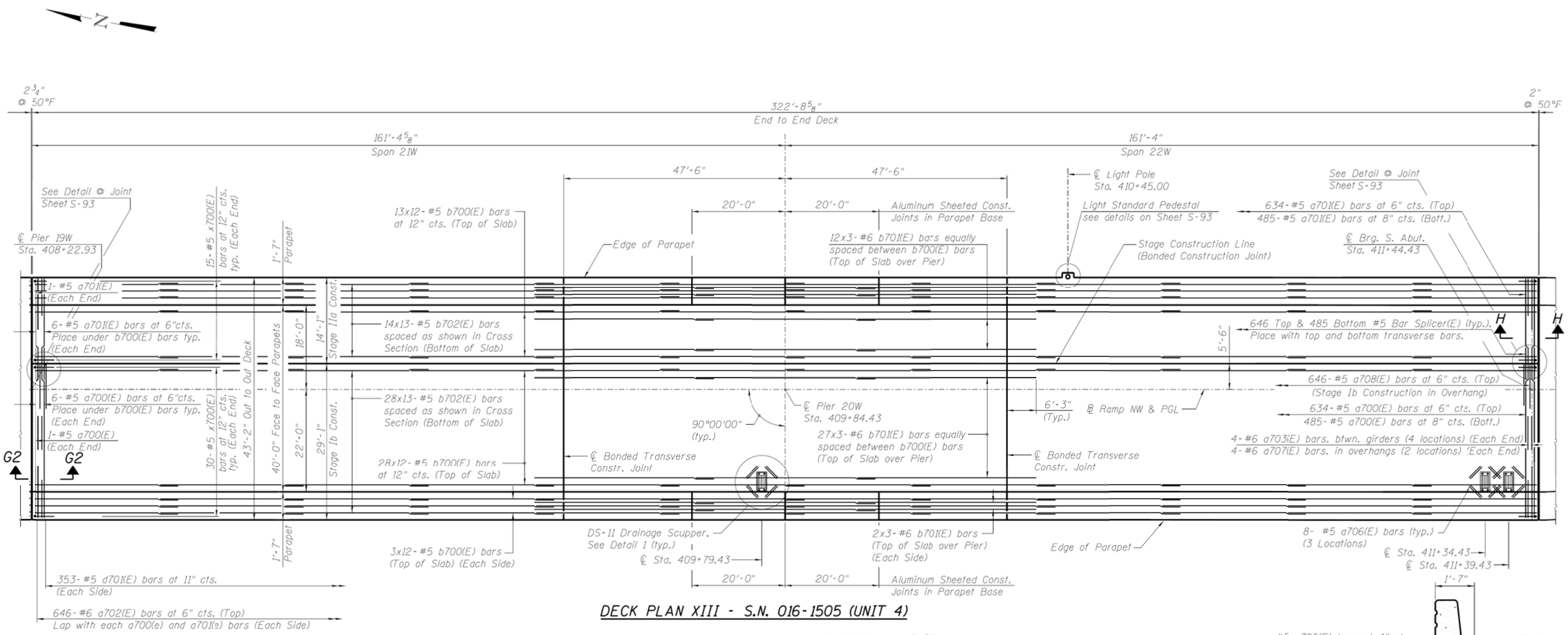

DECK PLAN XIII - S.N. 016-1505 (UNIT 4)

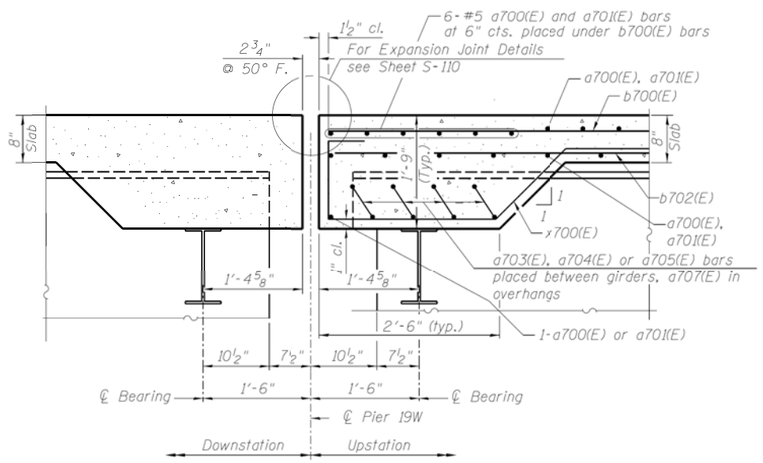

SECTION G2-G2

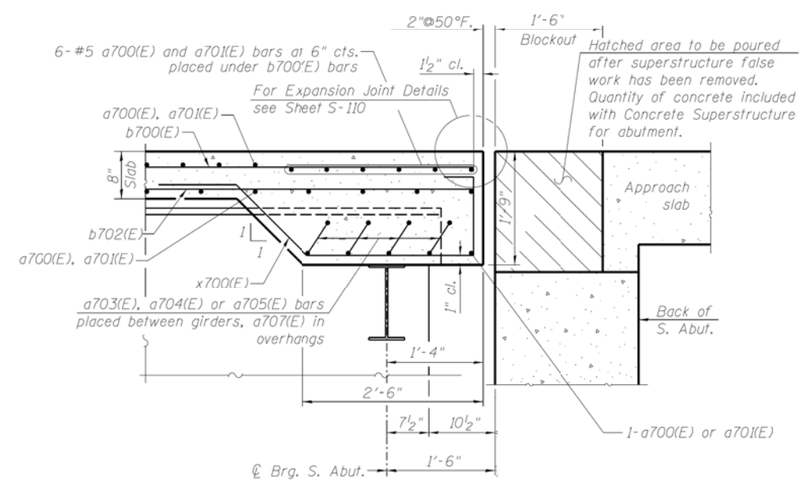

SECTION H-H

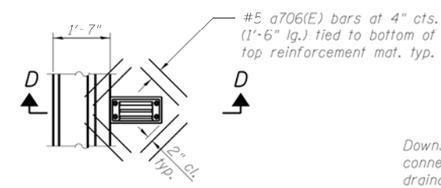

DETAIL 1
DRAINAGE SCUPPER DS-11

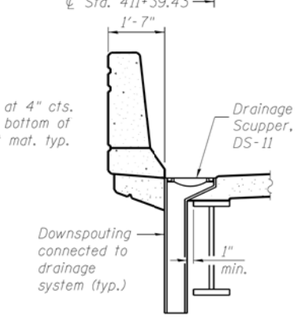

SECTION D-D

Note:
Reinforcement bars designated (E) shall be epoxy coated.
Cut longitudinal reinforcement to clear drainage scuppers.

NOTES:

1. Minimum lap for #5 bars shall be 3'-3" and for #6 bars shall be 3'-10".
2. Bars indicated 41x12-#5 etc. indicates 41 lines of bars with 12 lengths per line.
3. See Sheet S-85 for parapet reinforcement.
4. See Sheet S-93 for deck cross section.
5. See Sheet S-93 for Bill of Material.
6. See Sheet S-111 for DS-11 Drainage Scupper.
7. See Sheet S-95 for Deck Pouring Sequence.

MODEL: Default
FILE NAME: pw:\\ahnsoom.dot.illinois.gov:PWIDOT\Documents\IDOT Offices\District 1\Projects\D132320\CADData\Design\D132320-sprdge.dgn

USER NAME = diazia	DESIGNED -	REVISED -	
	DRAWN -	REVISED -	
PLOT SCALE = 100.0000 ' / in.	CHECKED -	REVISED -	
PLOT DATE = 12/6/2019	DATE -	REVISED -	

STATE OF ILLINOIS
DEPARTMENT OF TRANSPORTATION

EXISTING DECK PLAN
SN: 016-1505

SCALE: SHEET OF SHEETS STA. TO STA.

VAR. RTE.	SECTION	COUNTY	TOTAL SHEETS	SHEET NO.
VAR.	2019-155-BR	VARIOUS	107	53
		CONTRACT NO. 62K32		
	ILLINOIS	FED. AID PROJECT		

FOR INFORMATION ONLY

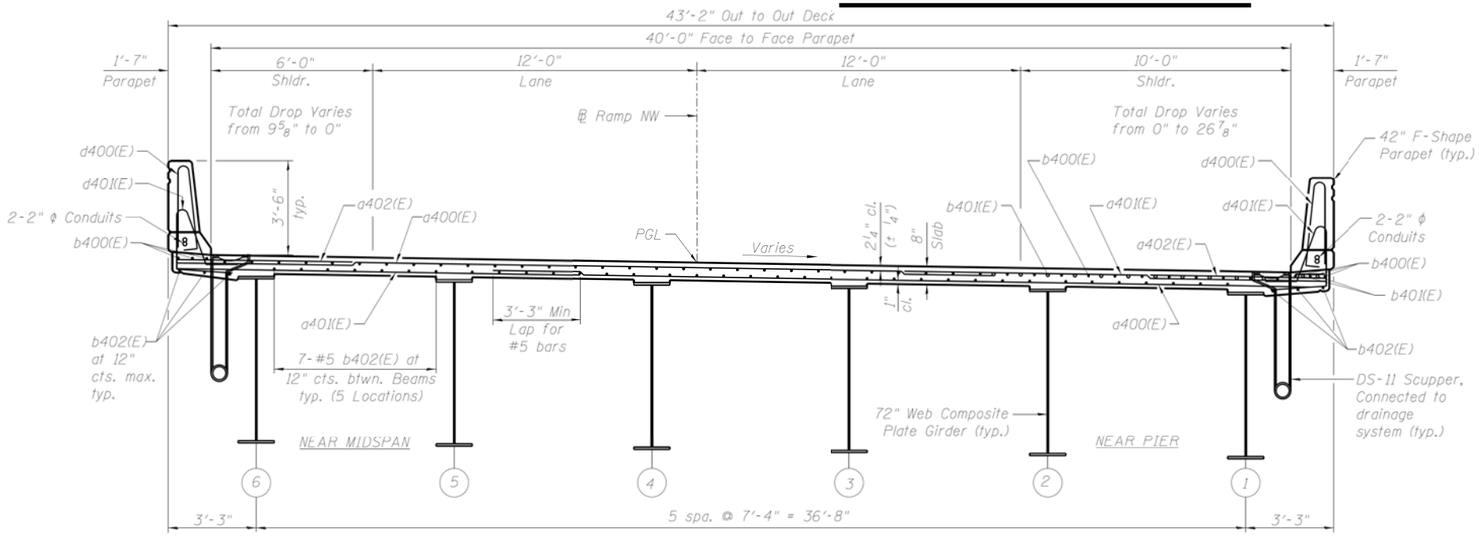

DECK CROSS SECTION - S.N. 016-1505 (UNIT 1)
(Looking East)

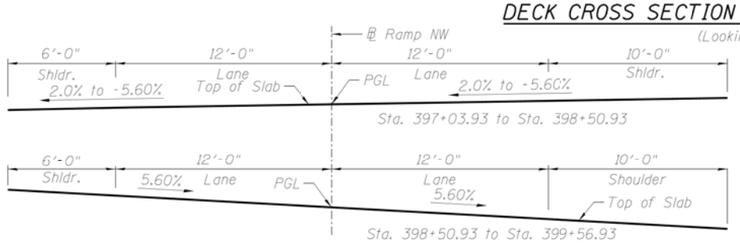

DECK CROSS SLOPE DETAIL UNIT 1

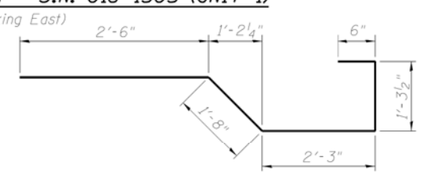

BAR x400(E)

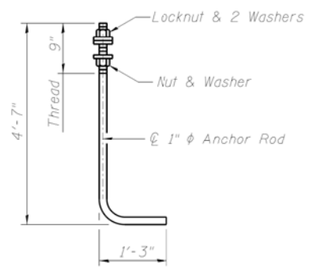

ANCHOR ROD
Diameter as specified for light poles.
(ASTM F 1554 Grade 105)

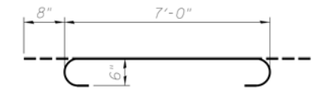

a403(E)

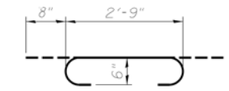

a404(E)

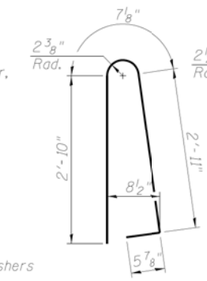

BAR d400(E)

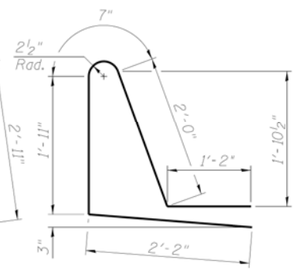

BAR d401(E)

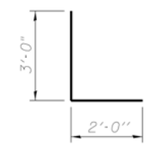

BAR d402(E)

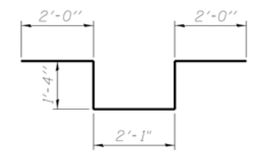

BAR d403(E)

SUPERSTRUCTURE BILL OF MATERIAL S.N. 016-1505 (UNIT 1)

Bar	No.	Size	Length	Shape
a400(E)	902	#5	30'-3"	
a401(E)	902	#5	15'-6"	
a402(E)	1028	#6	6'-9"	
a403(E)	40	#6	8'-4"	
a404(E)	16	#6	4'-1"	
a405(E)	40	#5	1'-6"	
b400(E)	506	#5	26'-4"	
b401(E)	129	#6	31'-9"	
b402(E)	410	#5	28'-8"	
d400(E)	615	#5	6'-10"	
d401(E)	551	#5	7'-10"	
d402(E)	3	#6	5'-0"	
d403(E)	5	#6	8'-9"	
e400(E)	32	#4	19'-8"	
e401(E)	14	#4	17'-5"	
e402(E)	70	#4	17'-4"	
e403(E)	7	#4	18'-4"	
e404(E)	35	#4	18'-1"	
e405(E)	7	#4	16'-4"	
e406(E)	35	#4	16'-5"	
e407(E)	8	#4	28'-0"	
e408(E)	4	#4	29'-3"	
e409(E)	4	#4	26'-7"	
e410(E)	4	#8	19'-8"	
e411(E)	8	#8	30'-4"	
e412(E)	4	#8	31'-6"	
e413(E)	4	#8	28'-11"	
x400(E)	88	#5	8'-2 1/2"	
Reinforcement Bars, Epoxy Coated			Pound	100,330
Concrete Superstructure			Cu. Yd.	371.9
Bridge Deck Grooving (Longitudinal)			Sq. Yd.	1,063
Protective Coat			Sq. Yd.	1,372

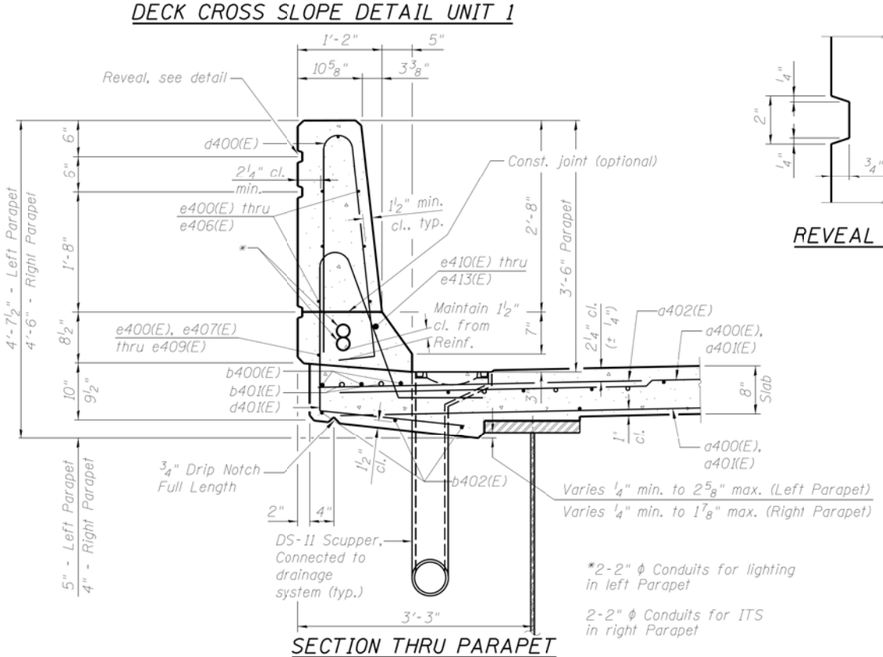

SECTION THRU PARAPET

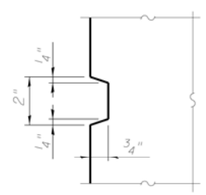

REVEAL DETAIL

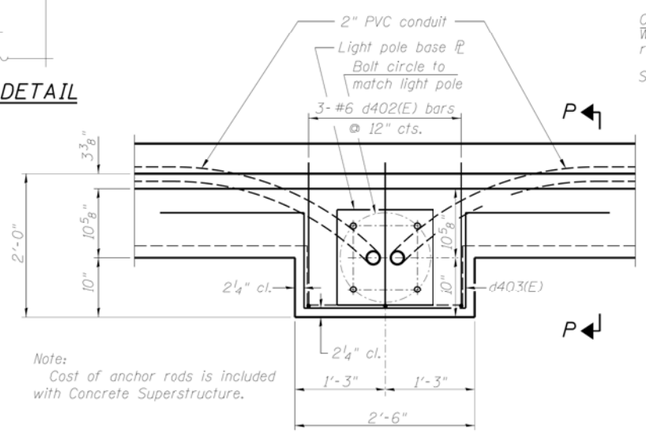

Note:
Cost of anchor rods is included with Concrete Superstructure.

PLAN

LIGHT POLE MOUNTED ON PARAPET

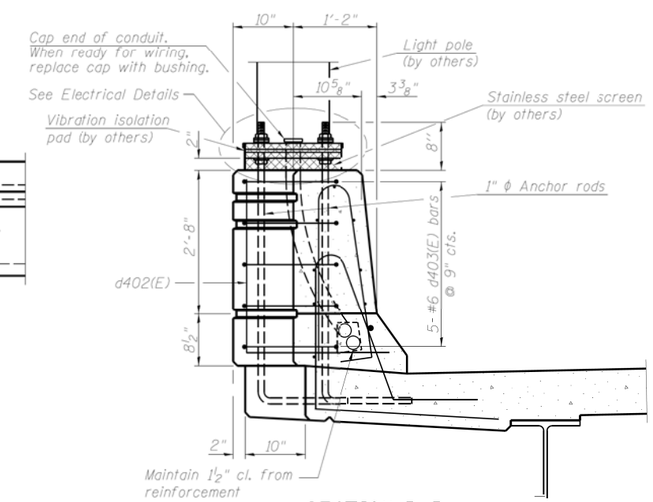

SECTION P-P

MODEL: Default
FILE NAME: pw:\\planroom.dot.illinois.gov:PWIDOT\Documents\IDOT Offices\District 1\Projects\D132320\CADData\Design\D132320-eribdge.dgn

USER NAME = diazia	DESIGNED -	REVISED -	
	DRAWN -	REVISED -	
PLOT SCALE = 100.0000 ' / in.	CHECKED -	REVISED -	
PLOT DATE = 12/6/2019	DATE -	REVISED -	

STATE OF ILLINOIS
DEPARTMENT OF TRANSPORTATION

EXISTING CROSS SECTION
SN: 016-1505

SCALE: | SHEET OF SHEETS | STA. TO STA.

VAR. RTE.	SECTION	COUNTY	TOTAL SHEETS	SHEET NO.
VAR.	2019-155-BR	VARIOUS	107	54
		CONTRACT NO. 62K32		
		ILLINOIS	FED. AID PROJECT	

FOR INFORMATION ONLY

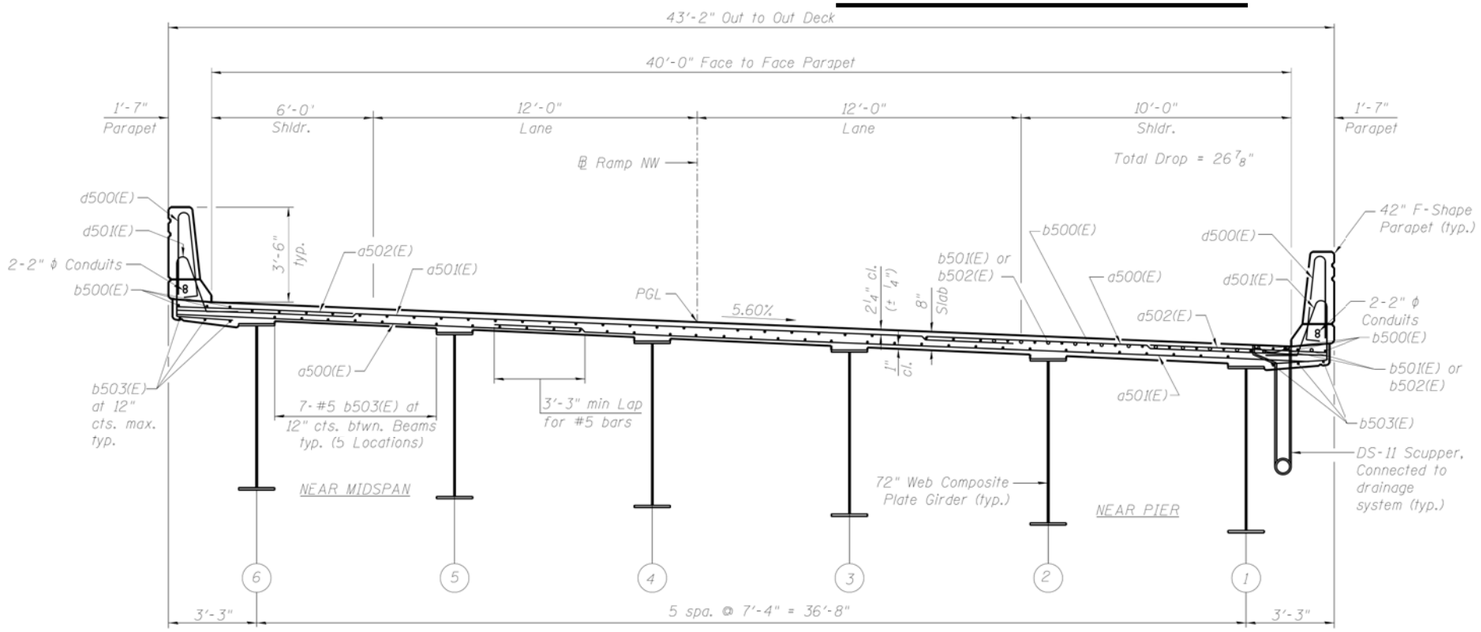

DECK CROSS SECTION - S.N. 016-1505 (UNIT 2)

(Looking East)

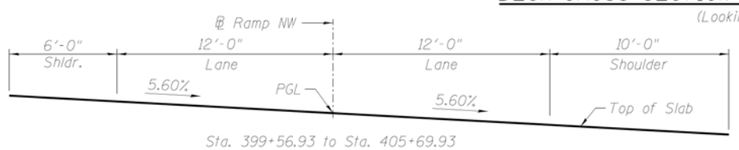

Sta. 399+56.93 to Sta. 405+69.93

DECK CROSS SLOPE DETAIL UNIT 2

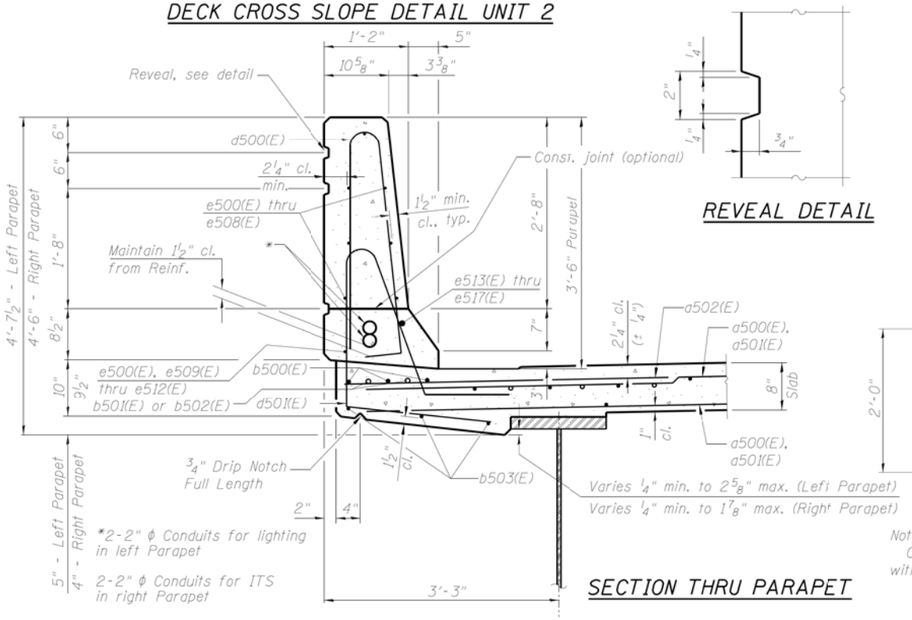

SECTION THRU PARAPET

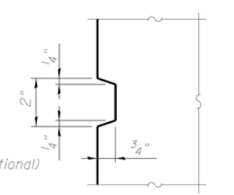

REVEAL DETAIL

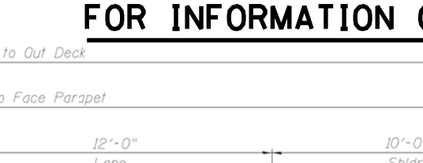

BAR x500(E)

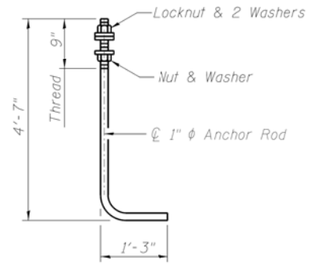

ANCHOR ROD

Diameter as specified for light poles. (ASTM F 1554 Grade 105)

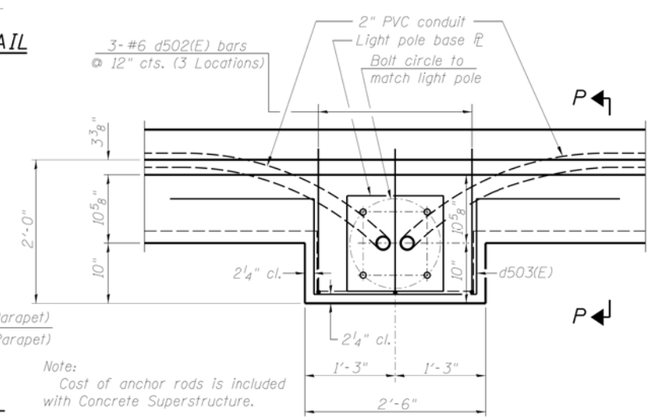

Note:
Cost of anchor rods is included with Concrete Superstructure.

PLAN

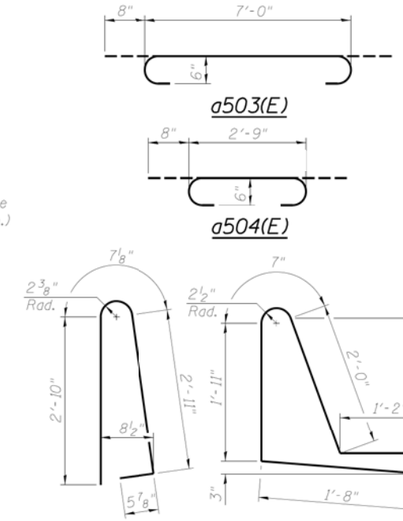

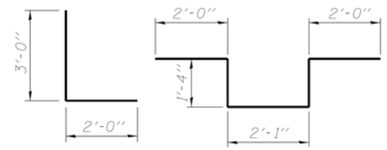

BAR d502(E) BAR d503(E)

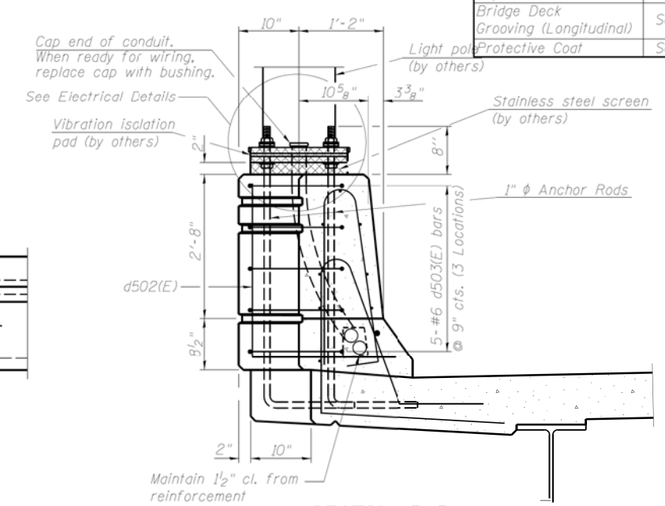

SECTION P-P

LIGHT POLE MOUNTED ON PARAPET

SUPERSTRUCTURE BILL OF MATERIAL S.N. 016-1505 (UNIT 2)

Bar	No.	Size	Length	Shape
a500(E)	2225	#5	15'-6"	
a501(E)	2225	#5	30'-3"	
a502(E)	2540	#6	6'-9"	
a503(E)	40	#6	8'-4"	
a504(E)	16	#6	4'-1"	
a505(E)	32	#5	1'-6"	
b500(E)	1104	#5	29'-8"	
b501(E)	258	#6	36'-2"	
b502(E)	215	#6	26'-5"	
b503(E)	1107	#5	26'-11"	
d500(E)	1492	#5	6'-10"	
d501(E)	1332	#5	7'-4"	
d502(E)	9	#6	5'-0"	
d503(E)	15	#6	8'-9"	
e500(E)	96	#4	19'-8"	
e501(E)	14	#4	18'-4"	
e502(E)	98	#4	18'-0"	
e503(E)	70	#4	18'-1"	
e504(E)	14	#4	18'-0"	
e505(E)	84	#4	18'-6"	
e506(E)	14	#4	18'-7"	
e507(E)	70	#4	16'-5"	
e508(E)	14	#4	16'-4"	
e509(E)	8	#4	26'-7"	
e510(E)	10	#4	28'-0"	
e511(E)	8	#4	29'-3"	
e512(E)	10	#4	30'-10"	
e513(E)	12	#8	19'-8"	
e514(E)	8	#8	28'-11"	
e515(E)	10	#8	30'-6"	
e516(E)	8	#8	31'-6"	
e517(E)	10	#8	33'-5"	
x500(E)	88	#5	8'-2½"	
Reinforcement Bars, Epoxy Coated			Pound	252,110
Concrete Superstructure			Cu. Yd.	886.2
Bridge Deck Grooving (Longitudinal)			Sq. Yd.	2,575
Protective Coat			Sq. Yd.	3,324

MODEL: Default
FILE NAME: pw:\\ildanscom.dot.illinois.gov:PWIDOT\Documents\IDOT Offices\District 1\Projects\D132320\CADData\Design\D132320-sht16ge.dgn

USER NAME = diazia	DESIGNED -	REVISED -	
	DRAWN -	REVISED -	
PLOT SCALE = 100.0000 ' / in.	CHECKED -	REVISED -	
PLOT DATE = 12/6/2019	DATE -	REVISED -	

STATE OF ILLINOIS
DEPARTMENT OF TRANSPORTATION

EXISTING CROSS SECTION
SN: 016-1505

SCALE: SHEET OF SHEETS STA. TO STA.

VAR. RTE.	SECTION	COUNTY	TOTAL SHEETS	SHEET NO.
VAR.	2019-155-BR	VARIOUS	107	55
		CONTRACT NO. 62K32		
	ILLINOIS	FED. AID PROJECT		

FOR INFORMATION ONLY

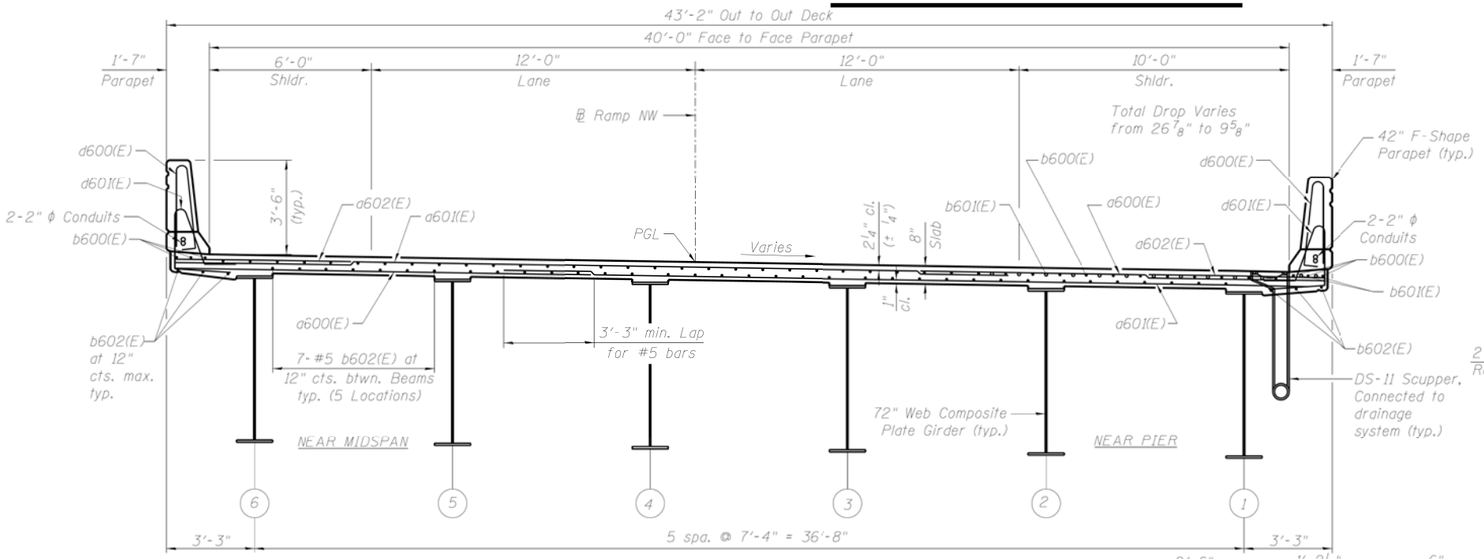

DECK CROSS SECTION - S.N. 016-1505 (UNIT 3)

(Looking South)

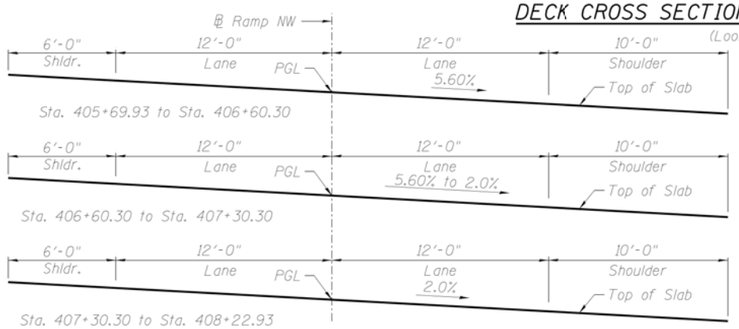

DECK CROSS SLOPE DETAIL (UNIT 3)

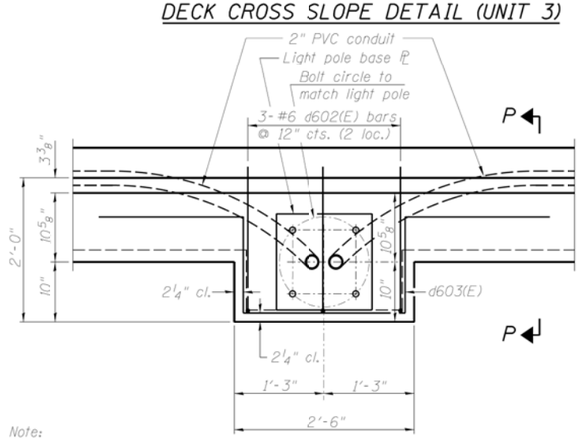

Note:
Cost of anchor rods is included with Concrete Superstructure.

PLAN

LIGHT POLE MOUNTED ON PARAPET

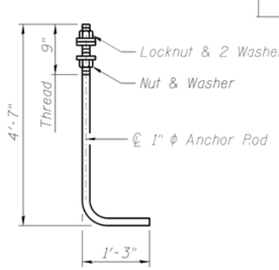

ANCHOR ROD

Diameter as specified for light poles. (ASTM F 1554 Grade 105)

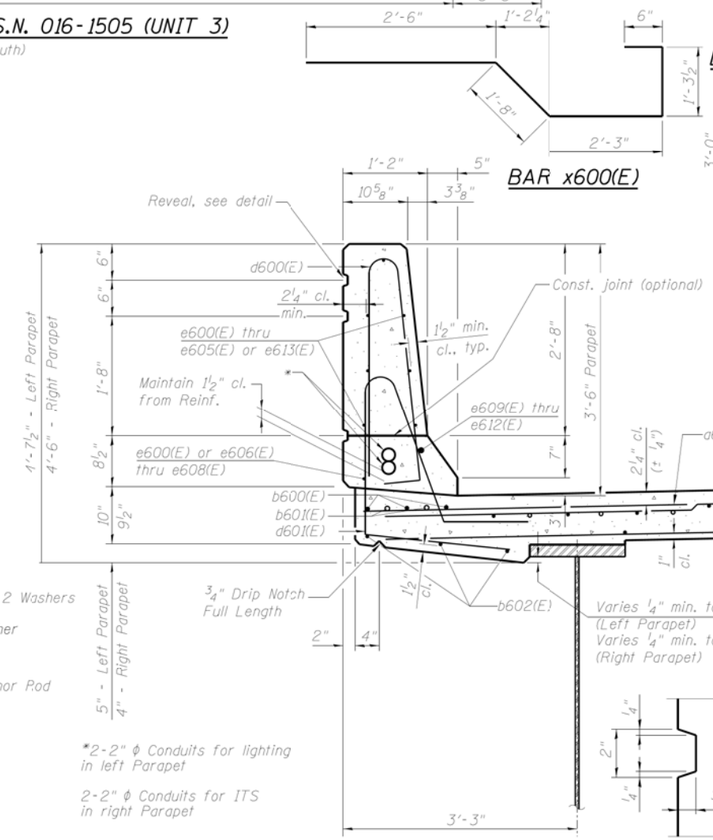

SECTION THRU PARAPET

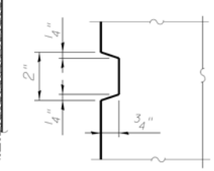

REVEAL DETAIL

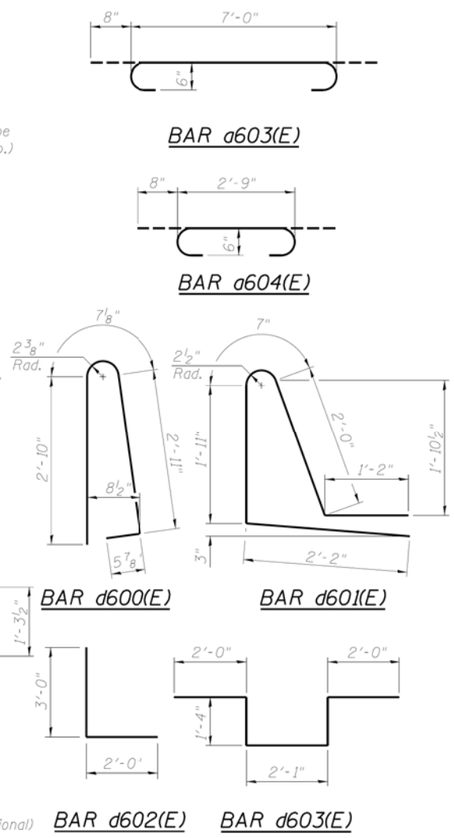

SUPERSTRUCTURE BILL OF MATERIAL S.N. 016-1505 (UNIT 3)

Bar	No.	Size	Length	Shape
a600(E)	904	#5	30'-3"	
a601(E)	904	#5	15'-6"	
a602(E)	1030	#6	6'-9"	
a603(E)	40	#6	8'-4"	
a604(E)	16	#6	4'-1"	
a605(E)	24	#5	1'-6"	
b600(E)	460	#5	28'-8"	
b601(E)	129	#6	31'-9"	
b602(E)	451	#5	26'-4"	
d600(E)	616	#5	6'-10"	
d601(E)	552	#5	7'-10"	
d602(E)	6	#6	5'-0"	
d603(E)	10	#6	8'-9"	
e600(E)	32	#4	19'-8"	
e601(E)	35	#4	18'-1"	
e602(E)	14	#4	17'-4"	
e603(E)	70	#4	17'-5"	
e604(E)	35	#4	16'-5"	
e605(E)	7	#4	16'-4"	
e606(E)	4	#4	29'-3"	
e607(E)	8	#4	28'-1"	
e608(E)	4	#4	26'-7"	
e609(E)	4	#8	19'-8"	
e610(E)	4	#8	31'-6"	
e611(E)	8	#8	30'-5"	
e612(E)	4	#8	28'-11"	
e613(E)	7	#4	18'-4"	
x600(E)	88	#5	8'-2 1/2"	

Reinforcement Bars, Epoxy Coated	Pound	100,510
Concrete Superstructure	Cu. Yd.	372.7
Bridge Deck Grooving (Longitudinal)	Sq. Yd.	1,064
Protective Coat	Sq. Yd.	1,374

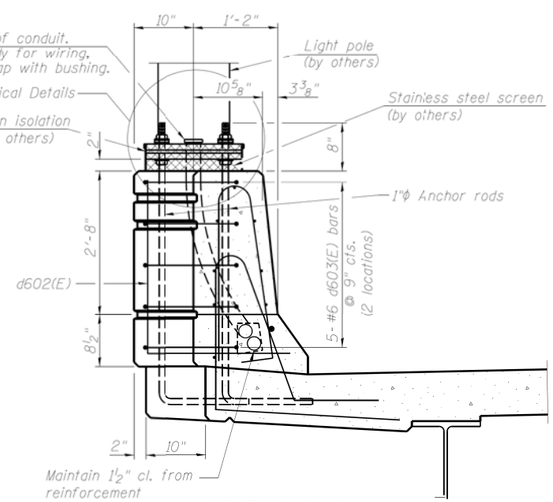

SECTION P-P

USER NAME = diazia	DESIGNED -	REVISED -	
	DRAWN -	REVISED -	
PLOT SCALE = 100.0000 ' / in.	CHECKED -	REVISED -	
PLOT DATE = 12/6/2019	DATE -	REVISED -	

STATE OF ILLINOIS
DEPARTMENT OF TRANSPORTATION

EXISTING CROSS SECTION
SN: 016-1505

SCALE: SHEET OF SHEETS STA. TO STA.

VAR. RTE.	SECTION	COUNTY	TOTAL SHEETS	SHEET NO.
VAR.	2019-155-BR	VARIOUS	107	56
		CONTRACT NO. 62K32		
		ILLINOIS	FED. AID PROJECT	

MODEL: Default
FILE NAME: pw:\\planroom.dot.illinois.gov:PWIDOT\Documents\IDOT Offices\District 1\Projects\D132320\CADData\Design\D132320-ebridge.dgn

FOR INFORMATION ONLY

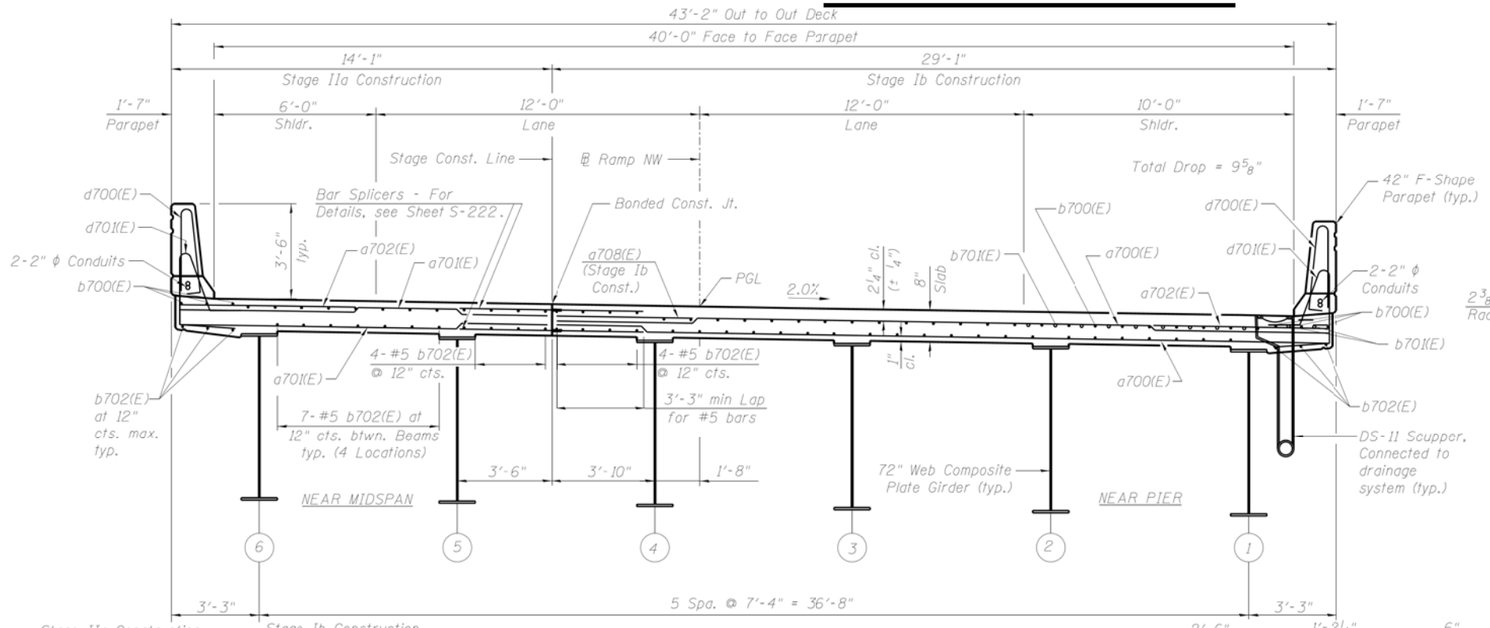

DECK CROSS SECTION - S.N. 016-1505 (UNIT 4)

(Looking South)

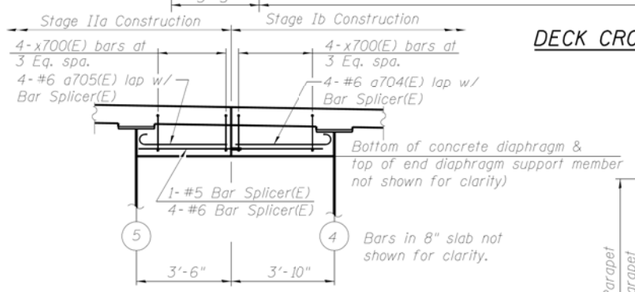

DETAIL @ JOINT

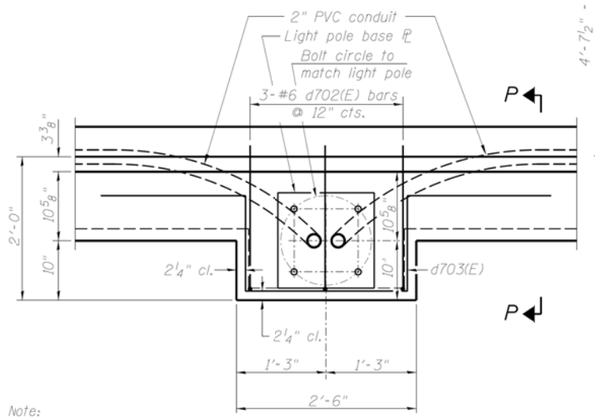

PLAN

LIGHT POLE MOUNTED ON PARAPET

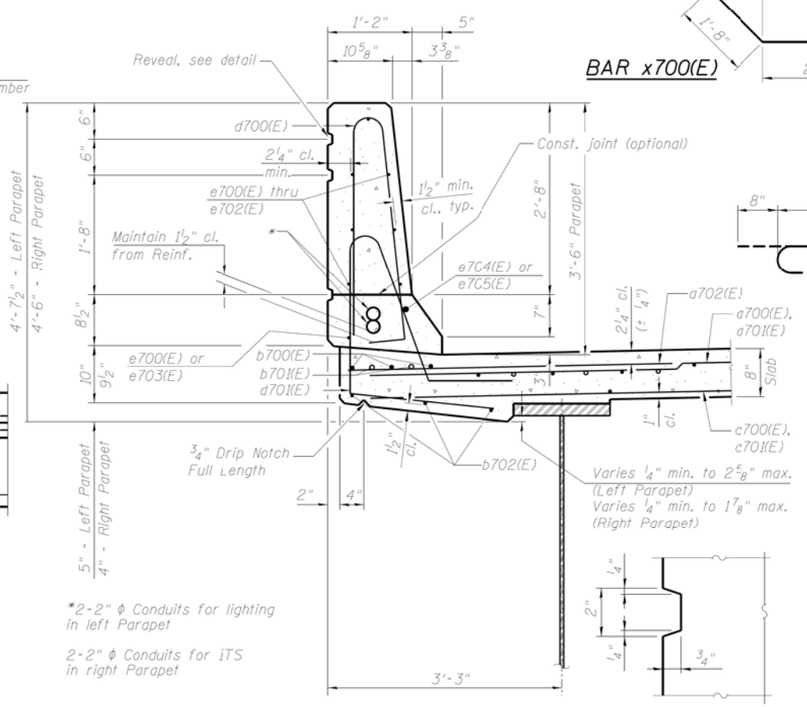

SECTION THRU PARAPET

REVEAL DETAIL

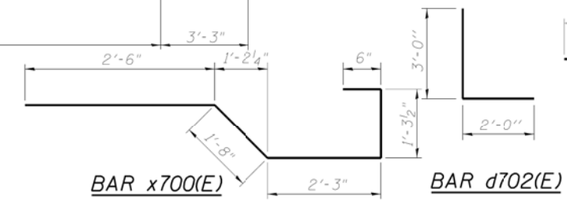

BAR x700(E)

BAR d702(E)

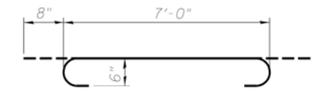

BAR a703(E)

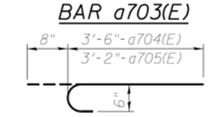

BARS a704(E) & a705(E)

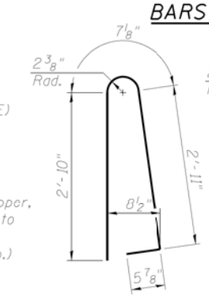

BAR d700(E)

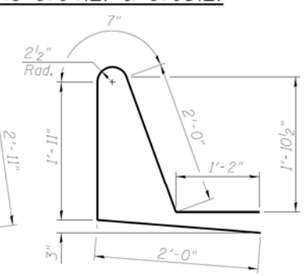

BAR d701(E)

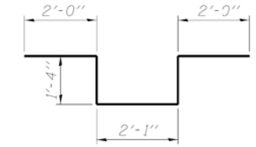

BAR d703(E)

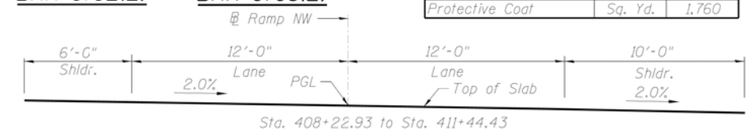

DECK CROSS SLOPE DETAIL (UNIT 4)

BAR a707(E)

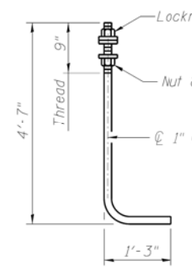

ANCHOR ROD

Diameter as specified for light poles. (ASTM F 1554 Grade 105)

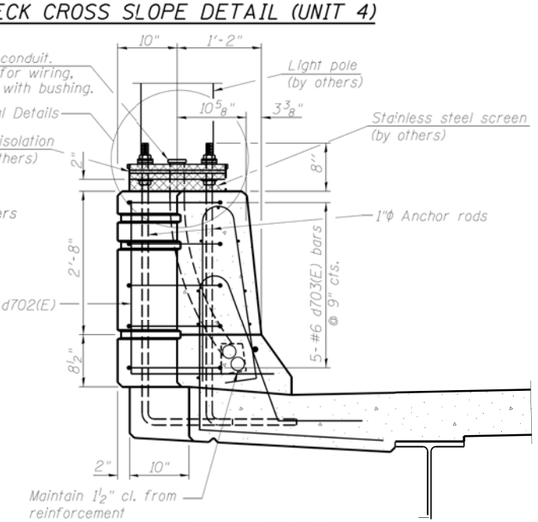

SECTION P-P

SUPERSTRUCTURE BILL OF MATERIAL S.N. 016-1505 (UNIT 4)

Bar	No.	Size	Length	Shape
a700(E)	1133	#5	28'-8"	
a701(E)	1133	#5	13'-8"	
a702(E)	1292	#6	6'-9"	
a703(E)	32	#6	8'-4"	
a704(E)	8	#6	4'-2"	
a705(E)	8	#6	3'-10"	
a706(E)	24	#5	1'-6"	
a707(E)	16	#6	4'-1"	
a708(E)	646	#5	11'-0"	
b700(E)	564	#5	29'-11"	
b701(E)	129	#6	38'-5"	
b702(E)	546	#5	27'-10"	
d700(E)	770	#5	6'-10"	
d701(E)	706	#5	7'-8"	
d702(E)	3	#6	5'-0"	
d703(E)	5	#6	8'-9"	
e700(E)	32	#4	19'-8"	
e701(E)	14	#4	17'-5"	
e702(E)	210	#4	17'-4"	
e703(E)	20	#4	29'-11"	
e704(E)	20	#8	32'-5"	
e705(E)	4	#8	19'-8"	
x700(E)	90	#5	8'-2½"	
Reinforcement Bars, Epoxy Coated			Pound	129,410
Concrete Superstructure			Cu. Yd.	474.0
Bridge Deck Grooving (Longitudinal)			Sq. Yd.	1,363
Protective Coat			Sq. Yd.	1,760

Note:
Cost of anchor rods is included with Concrete Superstructure.

MODEL: Default
FILE NAME: pw:\\pwinroom.dot.illinois.gov:PWIDOT\Documents\IDOT Offices\District 1\Projects\D132320\CADData\Design\D132320-ebridge.dgn

USER NAME = diazia	DESIGNED -	REVISED -	
	DRAWN -	REVISED -	
PLOT SCALE = 100.0000 ' / in.	CHECKED -	REVISED -	
PLOT DATE = 12/6/2019	DATE -	REVISED -	

STATE OF ILLINOIS
DEPARTMENT OF TRANSPORTATION

EXISTING CROSS SECTION
SN: 016-1505

SCALE: | SHEET OF SHEETS | STA. TO STA.

VAR. RTE.	SECTION	COUNTY	TOTAL SHEETS	SHEET NO.
VAR.	2019-155-BR	VARIOUS	107	57
		CONTRACT NO. 62K32		
		ILLINOIS	FED. AID PROJECT	

FOR INFORMATION ONLY

Bench Mark:
E. Flange Bolt of F.H. at S.W. corner Ridgeland & SW Highway - El. 181.825

Existing Structure:
S.N. 016-0463 was originally constructed in 1934. The overall length of the existing bridge is 386.75 m. The superstructure was reconstructed in 1959 and the bridge was partially reconstructed in 1999. The portion of the existing bridge remaining from the 1959 reconstruction consists of 18 simple spans comprised of preiensioned concrete deck beams, with an out-to-out width of 15.7 m. The portion of the existing bridge reconstructed in 1999 consists of five new rolled continuous wide flange beam spans to form a unit of 96.971 m. The out-to-out width of the concrete deck is 18.50 m. Two 7.70 m reinforced concrete slab spans were also constructed in 1999 to transition the new structure to the original.

Proposed Improvements:
The Contractor shall remove the existing structure as required to construct new spans 1-6 and 12-18. These thirteen new spans will consist of rolled continuous wide flange beams. Spans 7-11 will be raised by 330± mm, to provide 7.0 m of vertical clearance over the railroad.

Prior to beginning Stage I Work, temporary roadway lighting shall be mounted on poles set in the existing groundline along the west parapet of the existing bridge. Temporary lighting locations are shown as ⊙ See Lighting Plans for details.

Notes:
1. Road shall be kept open to one lane of traffic in each direction at all times by utilizing stage construction. No Pedestrian Traffic is allowed on the bridge during all stages of construction.
2. All dimensions are in millimeters (mm), except as noted.
3. Offsets are measured from ℄ SW Highway to edge of deck.
4. Salvage - See note 21 of General Notes on Sheet SA 4.

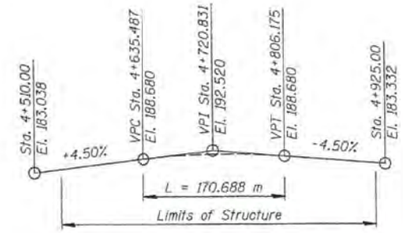

PROFILE GRADE SOUTHWEST HIGHWAY
(Along PGL Roadway)

WATERWAY INFORMATION (STONY CREEK)

Max Recorded H.W.E. = 180.90 m (7/ 18- 20 /96)

Drainage Area = 47.37 sq.km Low Grade Elev. 183.6 @ Sta. 4+525

Flood	Freq. (Yr.)	Q (cms)	Opening (Sq. m) Exist.	Opening (Sq. m) Prop.	Natural H.W.E. (m)	Head (m) Exist.	Head (m) Prop.	Headwater El. Exist.	Headwater El. Prop.
	10	35.25	147.3	154.3	180.61	0.00	0.00	180.61	180.61
Design	50	47.57	208.0	217.2	181.00	0.00	0.00	181.00	181.00
Base	100	53.24	234.2	244.4	181.16	0.00	0.00	181.16	181.16
Overtopping	>500								
Max. Calc.	500	58.33	277.3	289.2	181.42	0.00	0.00	181.42	181.42

All elevations are in Highway Datum
IDOT Datum = FIS Datum + 0.789 m

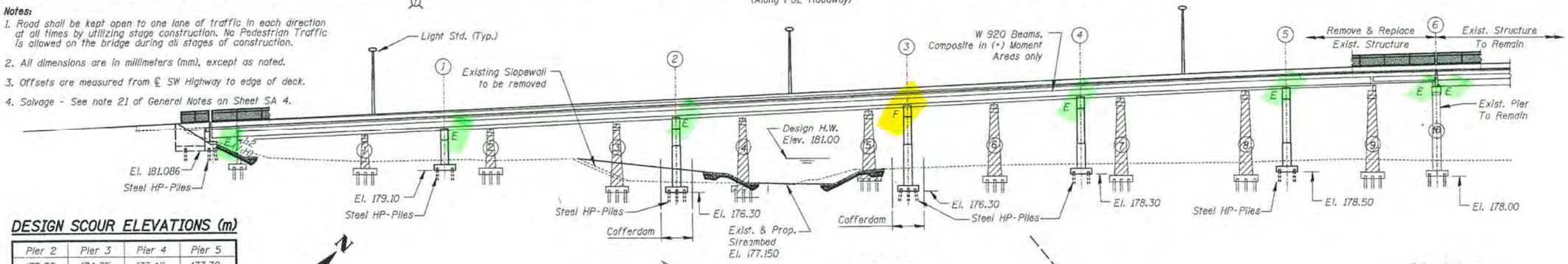

ELEVATION

DESIGN SCOUR ELEVATIONS (m)

Pier 2	Pier 3	Pier 4	Pier 5
175.55	174.75	177.42	177.72

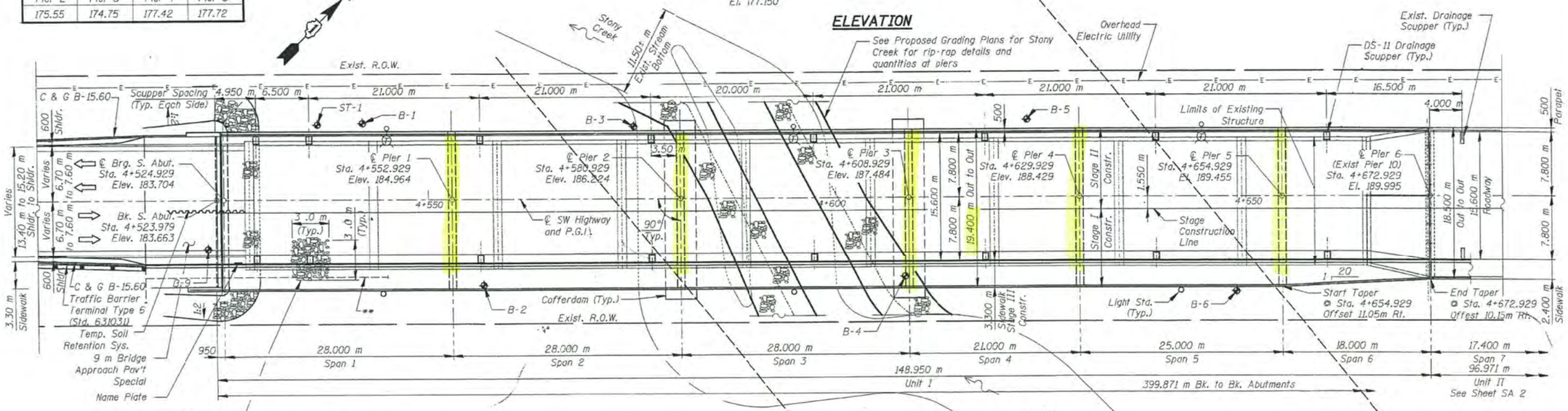

PLAN

DESIGN SPECIFICATIONS

2002 AASHTO Standard Specifications for Highway Bridges
2003 AASHTO Guide Specifications for Horizontally Curved Steel Girder Highway Bridges

LOADING MS18

Allowance for Future Wearing Surface = 2.4 kN/m²

DESIGN STRESSES

EXISTING CONSTRUCTION
f'c = 24 MPa
fy = 400 MPa (Reinf.)
fy = 345 MPa (M270M Grade 345)

NEW CONSTRUCTION
f'c = 24 MPa
fy = 400 MPa (Reinf.)
fy = 345 MPa (M270M Grade 345)

SEISMIC DATA

Seismic Performance Category (SPC) = A
Bedrock Acceleration Coefficient (A) = 0.038g
Site Coefficient (S) = 1.0

LOCATION SKETCH

USER NAME = diazia	DESIGNED -	REVISED -	
	DRAWN -	REVISED -	
PLOT SCALE = 100.0000 ' / in.	CHECKED -	REVISED -	
PLOT DATE = 12/6/2019	DATE -	REVISED -	

STATE OF ILLINOIS
DEPARTMENT OF TRANSPORTATION

EXISTING GENERAL PLAN
SN: 016-2771

SCALE: SHEET OF SHEETS STA. TO STA.

VAR. RTE.	SECTION	COUNTY	TOTAL SHEETS	SHEET NO.
VAR.	2019-155-BR	VARIOUS	107	58

CONTRACT NO. 62K32
ILLINOIS FED. AID PROJECT

MODEL: Default
FILE NAME: pw:\\planroom.dot.illinois.gov:PWIDOT\Documents\IDOT Offices\District 1\Projects\D132320\CADData\Design\D132320-ereplat.dgn

FOR INFORMATION ONLY

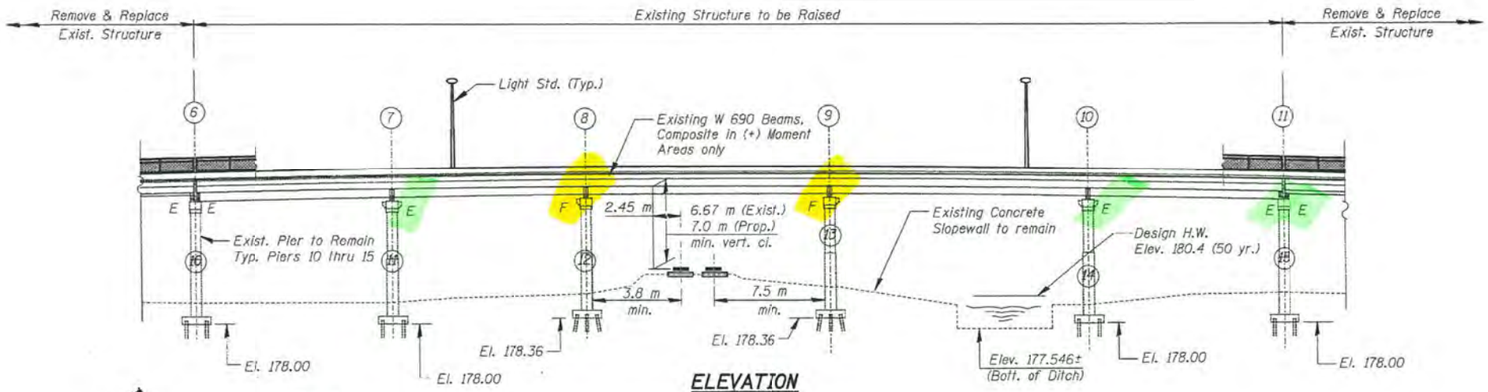

ELEVATION

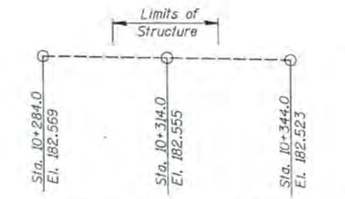

PROFILE GRADE B&O RAILROAD
(Top of S. Rail - Existing)

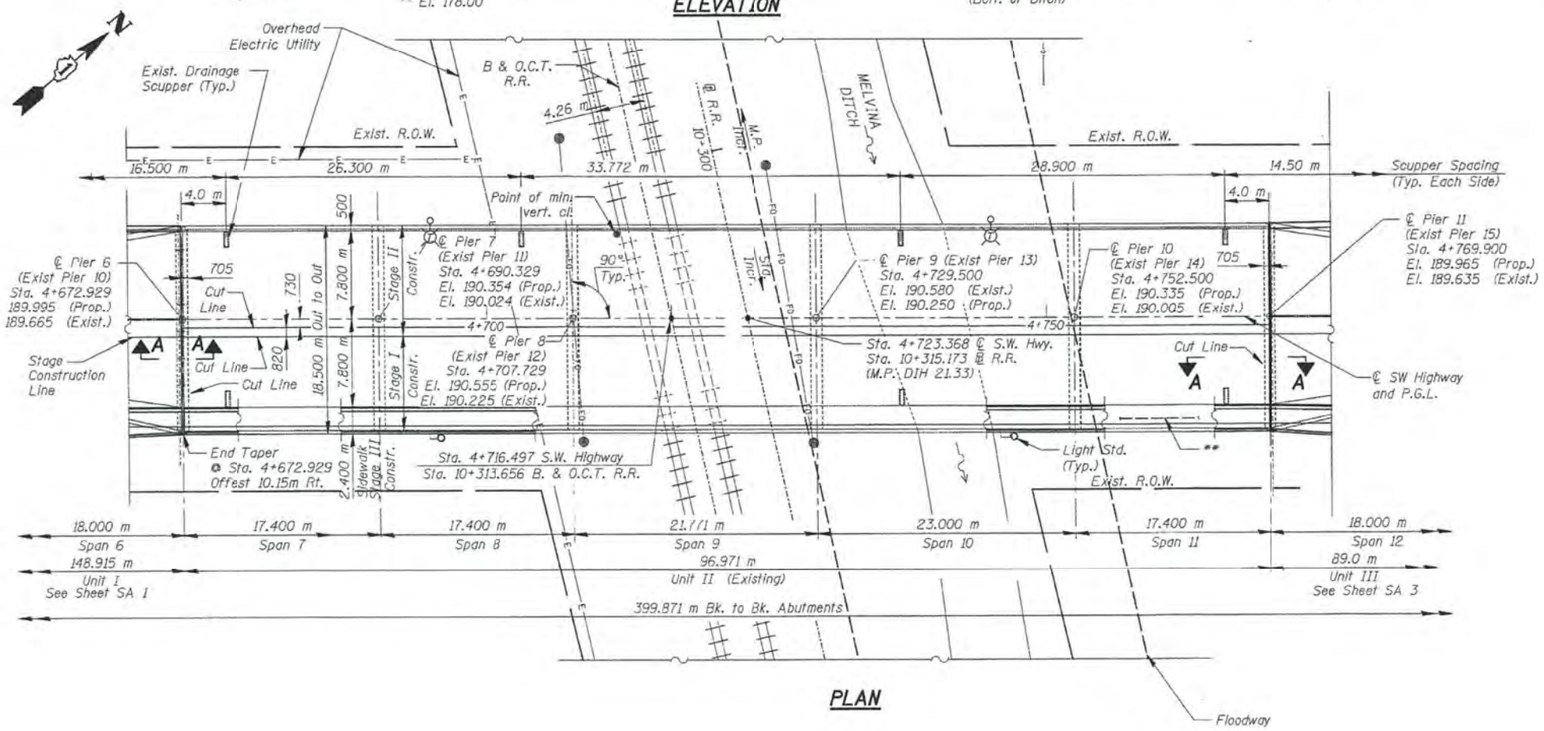

PLAN

CONDUIT NOTE:

1. Install 50-mm (2-inch) Dia. PVC coated rigid conduit for future interconnect. The conduit shall be securely fastened to the bridge. see Section 811 of the Standard Specifications for conduit installation and support. The contractor shall provide expansion fittings or liquid tight flexible metal conduit loops to match the locations of the expansion joints in the bridge deck. Expansion fittings shall be capable of a 6-inch (150-mm) total movement. Pull boxes shall be furnished and installed in accordance with Section 813. The contractor shall provide pull boxes at a maximum spacing of spacing of 150-m with a minimum of one pull box provided between expansion fittings. The conduit shall extend beyond the ends of the approach slabs and daylight into the side slope. The ends of the conduit shall be capped.

2. See lighting plans for details of conduit for roadway lighting.

MODEL: Default
FILE NAME: pw:\\ildenroom.dot.illinois.gov:PWIDOT\Documents\IDOT Offices\District 1\Projects\D132320\CADData\Design\D132320-ersalt.dgn

USER NAME = diazia	DESIGNED -	REVISED -	STATE OF ILLINOIS DEPARTMENT OF TRANSPORTATION	EXISTING GENERAL PLAN SN: 016-2771			VAR. RTE.	SECTION	COUNTY	TOTAL SHEETS / SHEET NO.
	DRAWN -	REVISED -					VAR.	2019-155-BR	VARIOUS	107 / 59
PLOT SCALE = 100.0000 ' / in.	CHECKED -	REVISED -							CONTRACT NO. 62K32	
PLOT DATE = 12/6/2019	DATE -	REVISED -		SCALE:	SHEET OF SHEETS	STA. TO STA.		ILLINOIS	FED. AID PROJECT	

FOR INFORMATION ONLY

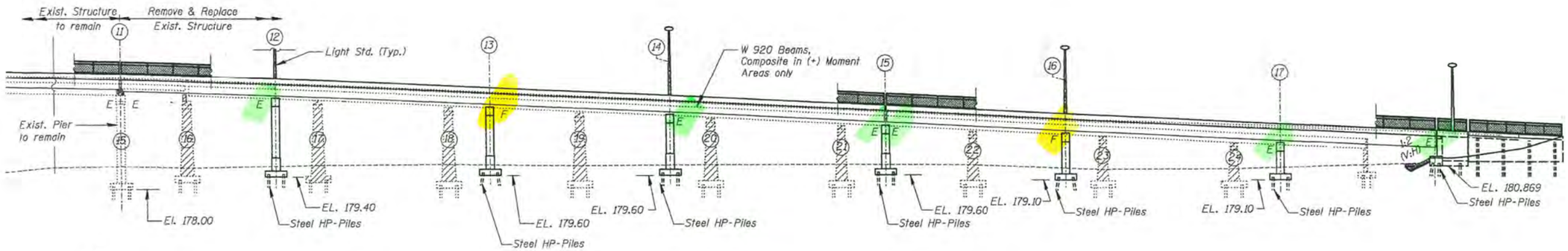

ELEVATION

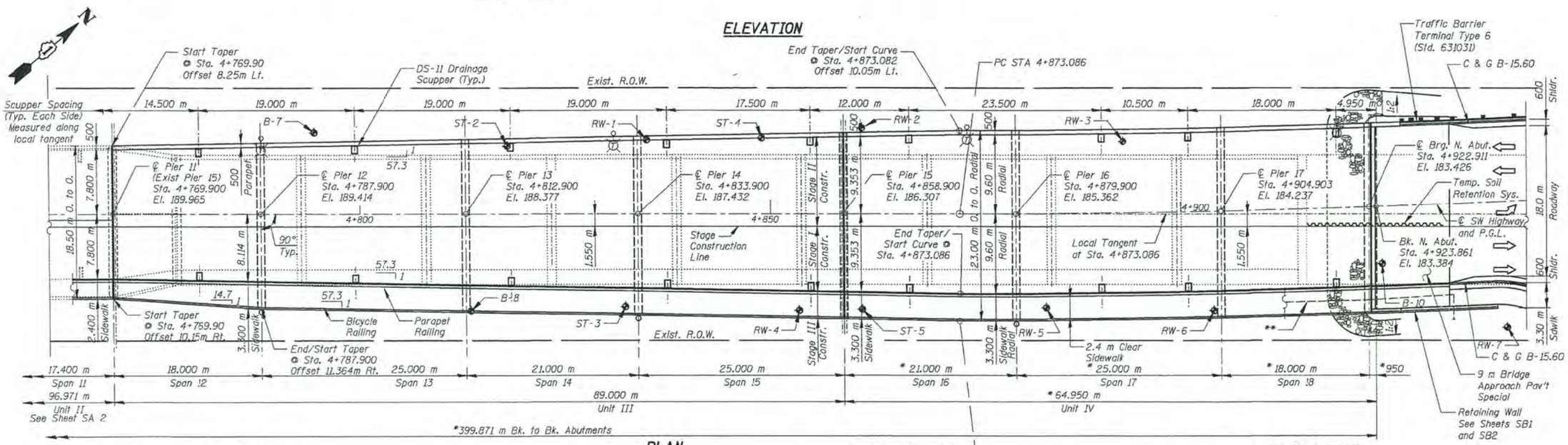

PLAN

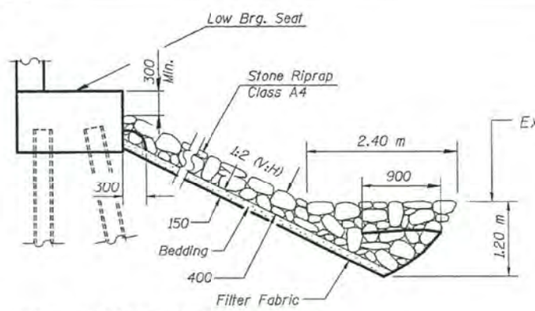

STONE RIPRAP ANCHOR DETAIL AT ABUTMENT

STATION 4+716.497
BUILT 200_ BY
STATE OF ILLINOIS
FAU 3578 SECTION 15V B-1-R-1
F.A. PROJ.
LOADING MS18
STR. NO. 016-2771

NAME PLATE

See Std. 515001

PROP. CURVE P-SW

PI STA = 4+981.784
Δ = 8° 52′ 45″ (LT)
R = 1,400.000 m
T = 108.697 m
L = 216.960 m
E = 4.213 m
e = Normal Crown
P.C. STA = 4+873.086
P.T. STA = 5+090.046

* Measured along local tangent

** Conduit for future interconnect. (See Conduit Note on Sheet SA 2 of SA 110)

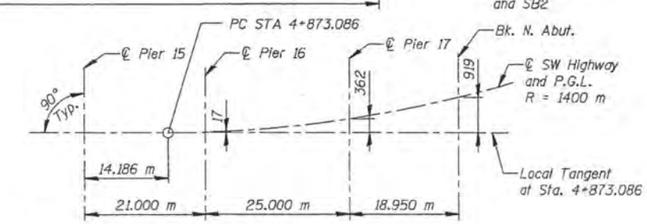

OFFSET SKETCH

USER NAME = diazia	DESIGNED -	REVISED -	
	DRAWN -	REVISED -	
PLOT SCALE = 100.0000 ' / in.	CHECKED -	REVISED -	
PLOT DATE = 12/6/2019	DATE -	REVISED -	

STATE OF ILLINOIS
DEPARTMENT OF TRANSPORTATION

EXISTING GENERAL PLAN
SN: 016-2771

SCALE: | SHEET OF SHEETS | STA. TO STA.

VAR. RTE.	SECTION	COUNTY	TOTAL SHEETS	SHEET NO.
VAR.	2019-155-BR	VARIOUS	107	60

CONTRACT NO. 62K32

ILLINOIS | FED. AID PROJECT

MODEL: Default
FILE NAME: pw:\\ulanroom.dot.illinois.gov:PWIDOT\Documents\IDOT Offices\District 1\Projects\D132320\CADData\Design\D132320-ereslt.dgn

FOR INFORMATION ONLY

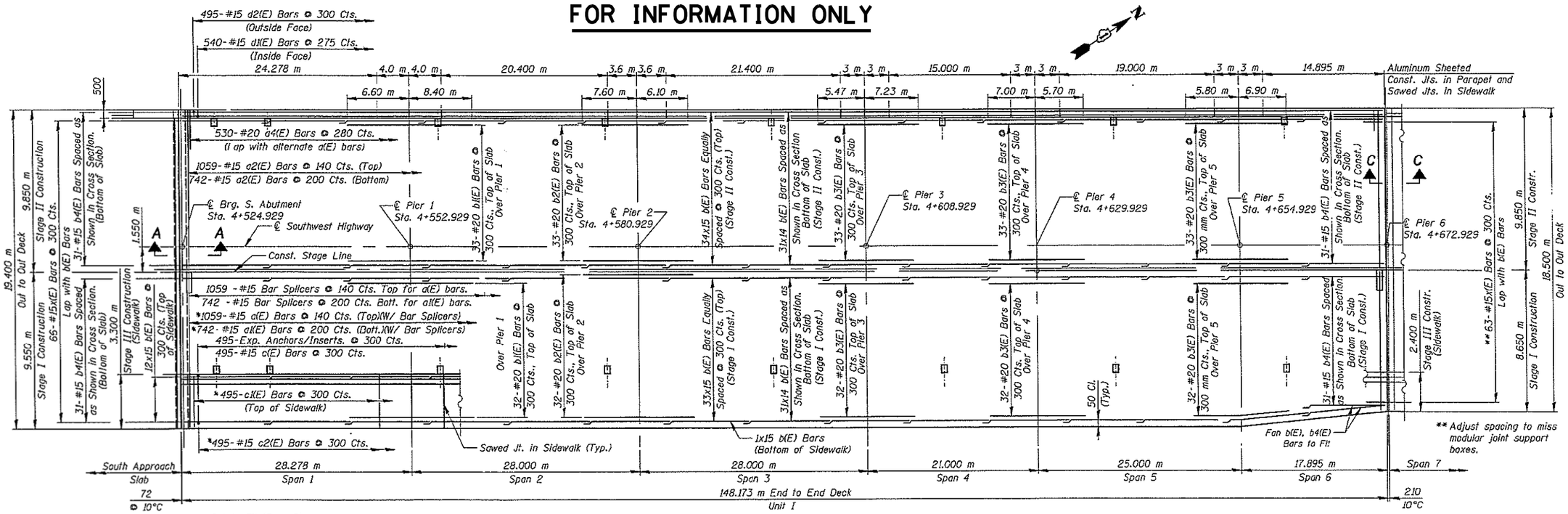

DECK PLAN

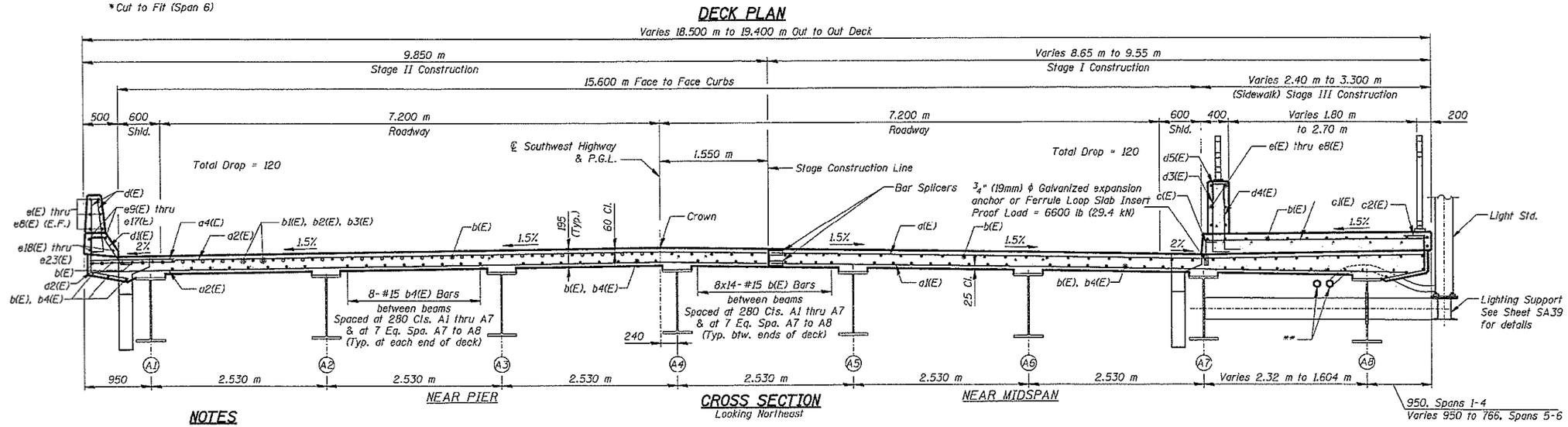

CROSS SECTION

Looking Northeast

NOTES

1. Reinforcement Bars designated (E) shall be Epoxy Coated.
2. Bars indicated 20 x 3 - #15 etc. indicates 20 Lines of Bars with 3 lengths per line.
3. All egdes shall have standard 19 mm chamfer except as noted.
4. Work this Sheet with Sheet Nos. SA20 and SA21. See Sheets SA20 & SA21 for Parapet and Bicycle Railing Details.
5. All Dimensions are in millimeters (mm) except as noted.
6. Place bars d1(E) and d2(E) to miss the aluminum sheeted joint locations in parapets
7. The cost of expansion anchors/inserts is included in the cost of Reinforcement Bars, Epoxy Coated.

MODEL: Default
FILE NAME: pw:\\dallanroom.dot.illinois.gov:PWIDOT\Documents\IDOT Offices\District 1\Projects\D132320\CADData\Design\D132320-ecrsalt.dgn

USER NAME = diazia	DESIGNED -	REVISED -	STATE OF ILLINOIS DEPARTMENT OF TRANSPORTATION
	DRAWN -	REVISED -	
PLOT SCALE = 100.0000 ' / in.	CHECKED -	REVISED -	
PLOT DATE = 12/6/2019	DATE -	REVISED -	

EXISTING DECK PLAN
SN: 016-2771

SCALE: | SHEET OF SHEETS | STA. TO STA.

VAR. RTE.	SECTION	COUNTY	TOTAL SHEETS	SHEET NO.
VAR.	2019-155-BR	VARIOUS	107	61
		CONTRACT NO. 62K32		
		ILLINOIS	FED. AID PROJECT	

FOR INFORMATION ONLY

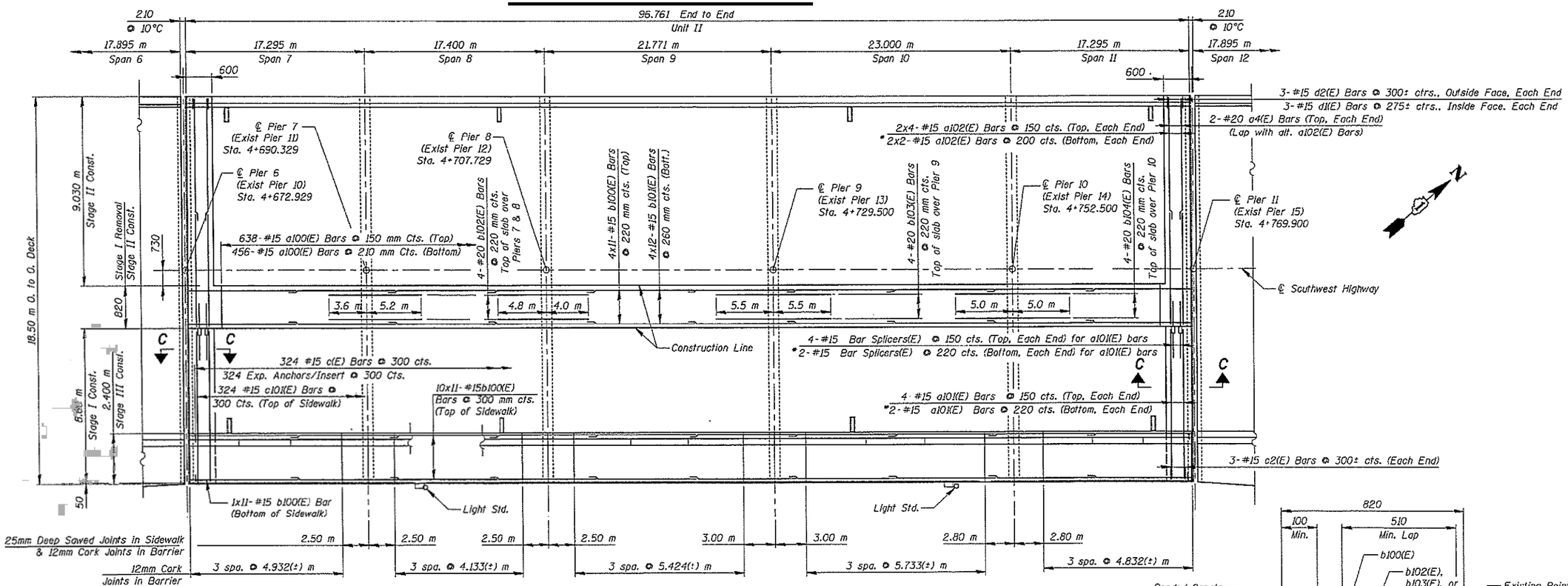

PLAN

See Sheet SA23A for Edge Beam Reinforcement

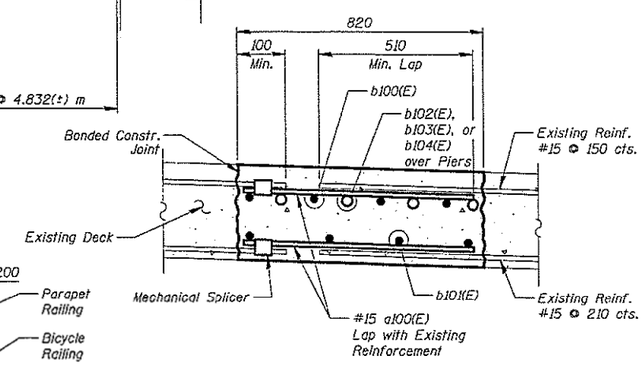

DETAIL A

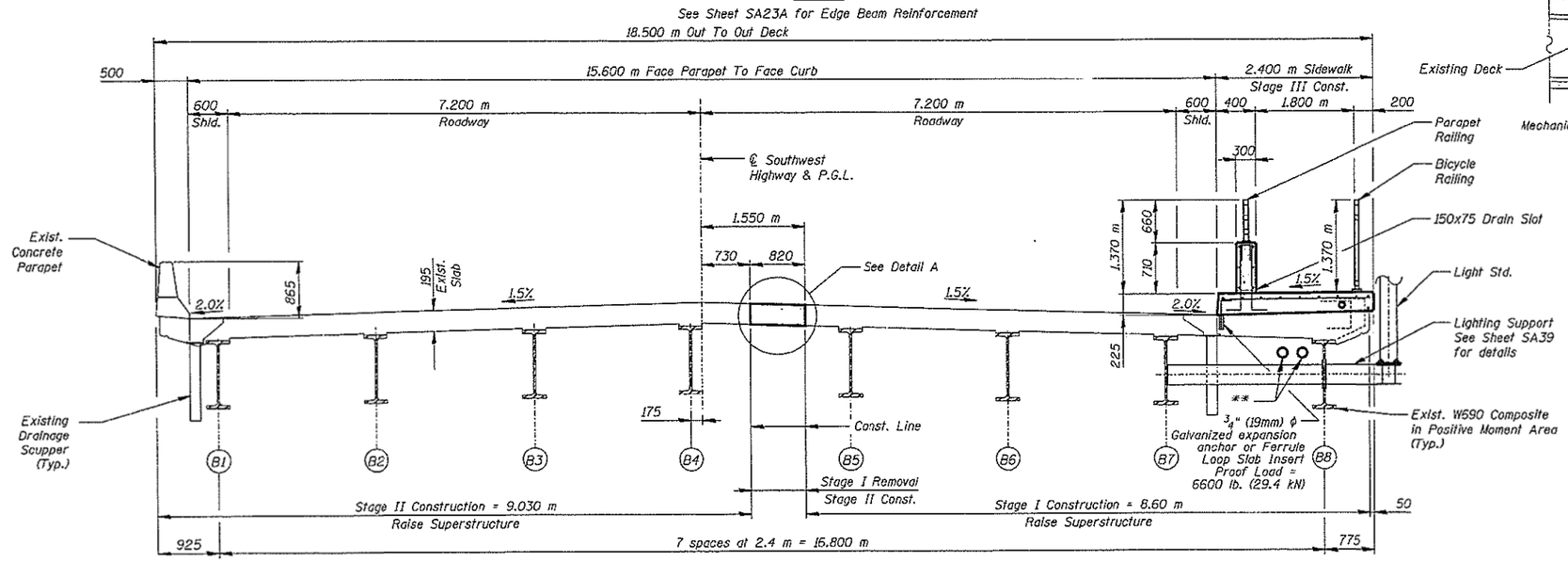

CROSS SECTION

Looking North

NOTES

1. Reinforcement bars designated (E) shall be Epoxy Coated.
2. Bars indicated thus 20 x 3 -#15 etc. indicates 20 lines of bars with 3 lengths per line.
3. All dimensions are in millimeters (mm) except as noted.
4. Dowel holes shall be drilled 5mm larger than the diameter of the dowels, depth of the embedment shall be 100mm minimum.
5. Work this Sheet with Sheet SA23 and SA23A
6. For Section C-C see Sheet SA20, for Section D-D see Sheet SA25.

USER NAME = diazia	DESIGNED -	REVISED -	STATE OF ILLINOIS DEPARTMENT OF TRANSPORTATION
	DRAWN -	REVISED -	
PLOT SCALE = 100.0000 ' / in.	CHECKED -	REVISED -	
PLOT DATE = 12/6/2019	DATE -	REVISED -	

EXISTING DECK PLAN
SN: 016-2771

SCALE: SHEET OF SHEETS STA. TO STA.

VAR. RTE.	SECTION	COUNTY	TOTAL SHEETS	SHEET NO.
VAR.	2019-155-BR	VARIOUS	107	62

CONTRACT NO. 62K32

ILLINOIS FED. AID PROJECT

MODEL: Default
FILE NAME: pw:\\uhanroom.dot.illinois.gov:PWIDOT\Documents\IDOT Offices\District 1\Projects\D132320\CADData\Design\D132320-repair.dgn

FOR INFORMATION ONLY

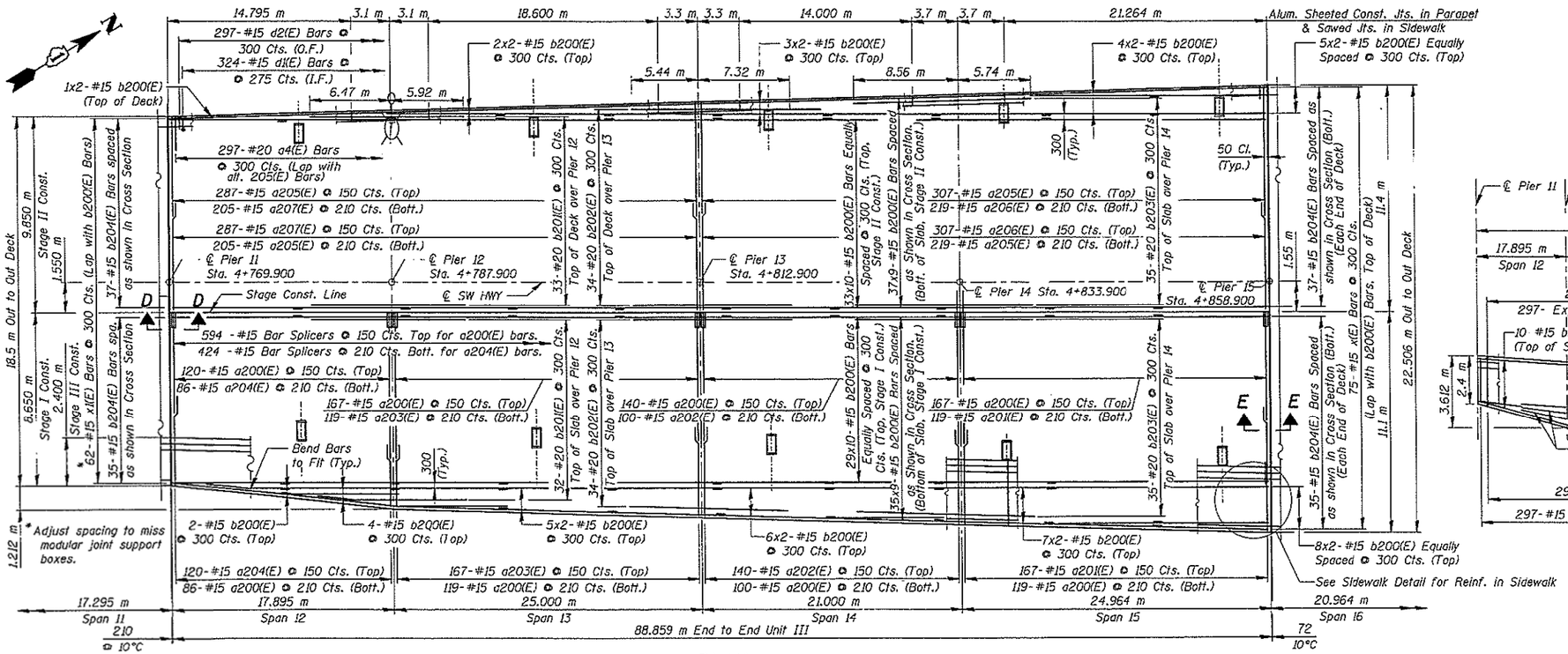

PLAN

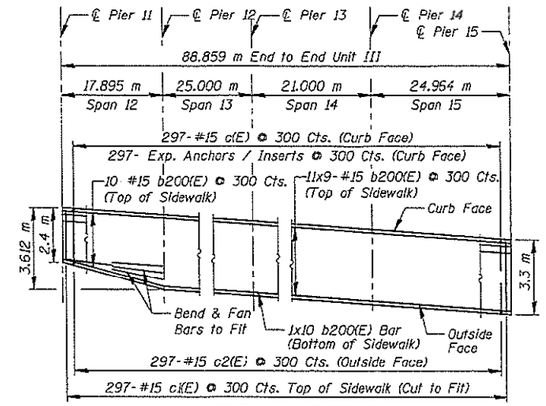

SIDEWALK DETAIL

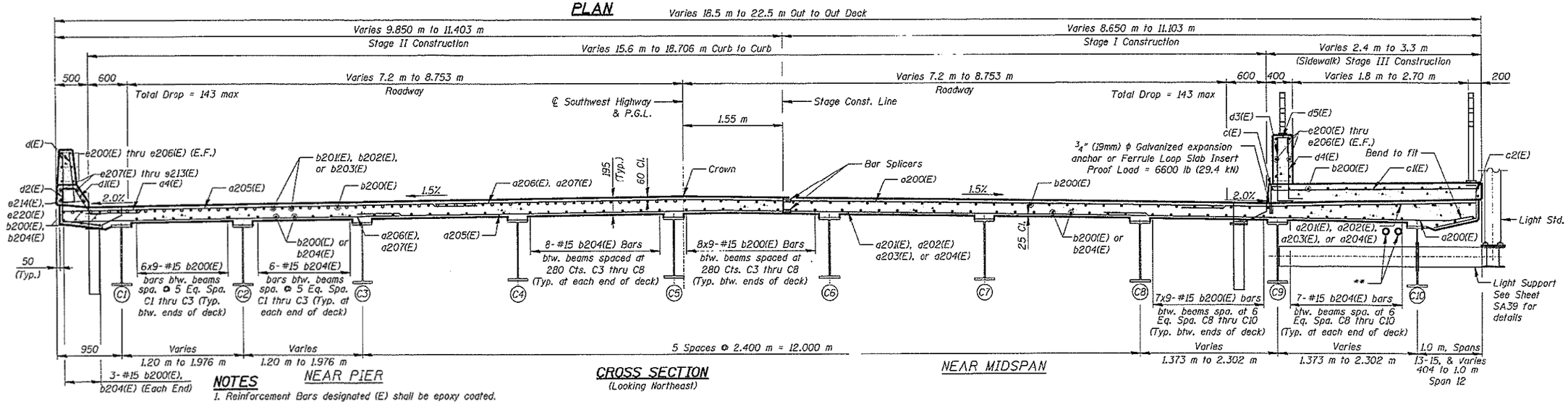

NEAR PIER

CROSS SECTION
(Looking Northeast)

NEAR MIDSPAN

NOTES

1. Reinforcement Bars designated (E) shall be epoxy coated.
2. Bars indicated 20 x 3 - #15 etc. indicates 20 lines of bars with 3 lengths per line.
3. All egdes shall have standard 19 mm chamfer except as noted.
4. Work this Sheet with Sheet SA25 and SA26. See Sheet SA25 for Bicycle Railing Details and SA26 for Parapet Details.
5. All Dimensions are in millimeters (mm) except as noted.
6. Place bars d1(E) and d2(E) to miss the aluminum sheeted joint locations in parapets

MODEL: Default
FILE NAME: pw:\\ildhanoom.dot.illinois.gov:PWIDOT\Documents\IDOT Offices\District 1\Projects\D132320\CADData\Design\D132320-ex-sa1.dgn

USER NAME = diazia	DESIGNED -	REVISED -	STATE OF ILLINOIS DEPARTMENT OF TRANSPORTATION	EXISTING DECK PLAN SN: 016-2771	VAR. RTE.	SECTION	COUNTY	TOTAL SHEETS / SHEET NO.
	DRAWN -	REVISED -			VAR.	2019-155-BR	VARIOUS	107 / 63
PLOT SCALE = 100.0000 ' / in.	CHECKED -	REVISED -					CONTRACT NO. 62K32	
PLOT DATE = 12/6/2019	DATE -	REVISED -		SCALE: SHEET OF SHEETS STA. TO STA.		ILLINOIS	FED. AID PROJECT	

FOR INFORMATION ONLY

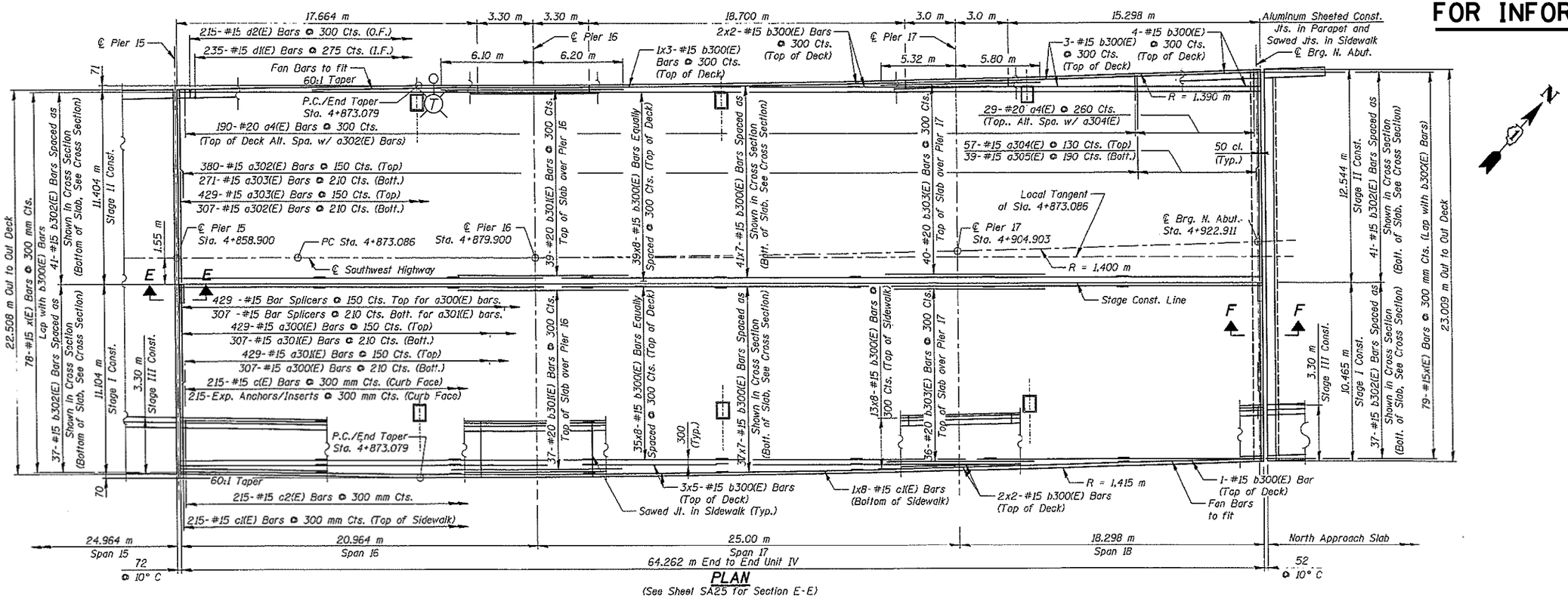

PLAN

(See Sheet SA25 for Section E-E)

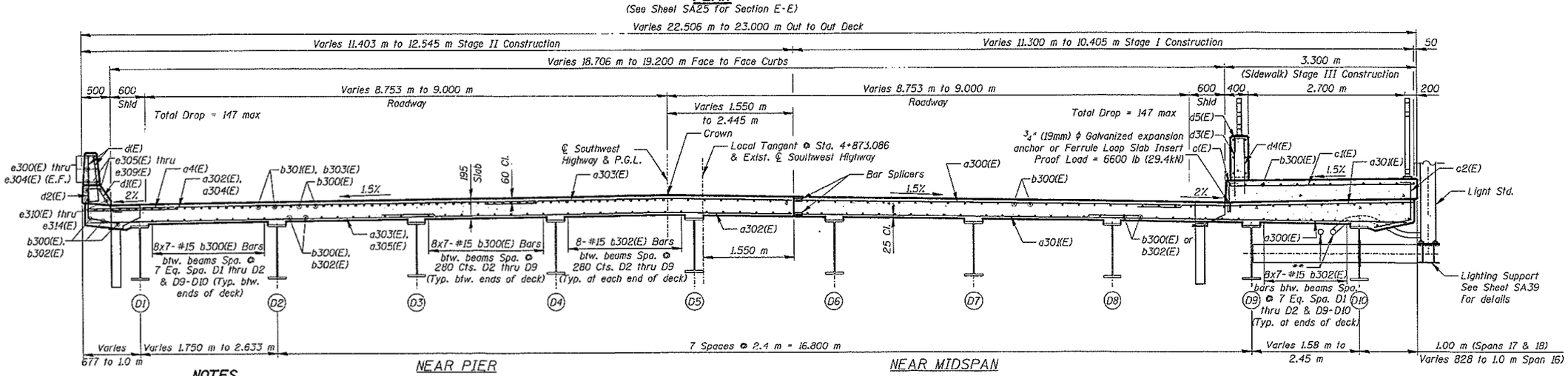

CROSS SECTION

(Looking Northeast)
All cross section dimensions are radial to ℄ Southwest Highway

NOTES

1. Reinforcement Bars designated (E) shall be Epoxy Coated.
2. Bars indicated 20 x 3 - #15 etc. indicates 20 Lines of Bars with 3 lengths per line.
3. All egdes shall have standard 3/4" (19 mm) chamfer except as noted.
4. Work this Sheet with Sheet Nos. SA28 and SA29. See Sheets SA28 & SA29 for Parapet and Bicycle Railing Details.
5. All Dimensions are in millimeters (mm) except as noted.
6. Place bars d1(E) and d2(E) to miss the aluminum sheeted joint locations in parapets.

USER NAME = diazia	DESIGNED -	REVISED -	
	DRAWN -	REVISED -	
PLOT SCALE = 100.0000 ' / in.	CHECKED -	REVISED -	
PLOT DATE = 12/6/2019	DATE -	REVISED -	

STATE OF ILLINOIS
DEPARTMENT OF TRANSPORTATION

EXISTING DECK PLAN
SN: 016-2771

SCALE: SHEET OF SHEETS STA. TO STA.

VAR. RTE.	SECTION	COUNTY	TOTAL SHEETS	SHEET NO.
VAR.	2019-155-BR	VARIOUS	107	64
		CONTRACT NO. 62K32		
		ILLINOIS FED. AID PROJECT		

MODEL: Default
FILE NAME: pw:\\ahnoom.dot.illinois.gov:PWIDOT\Documents\IDOT Offices\District 1\Projects\D132320\CADData\Design\D132320-ex-sa1-dgn

FOR INFORMATION ONLY

Benchmark: BM ASC220 Square cut on southeast corner of NB IL 394 bridge over I-80. Elev. = 184.942

Existing Structure: None All dimensions are in millimeters (mm) except as noted.

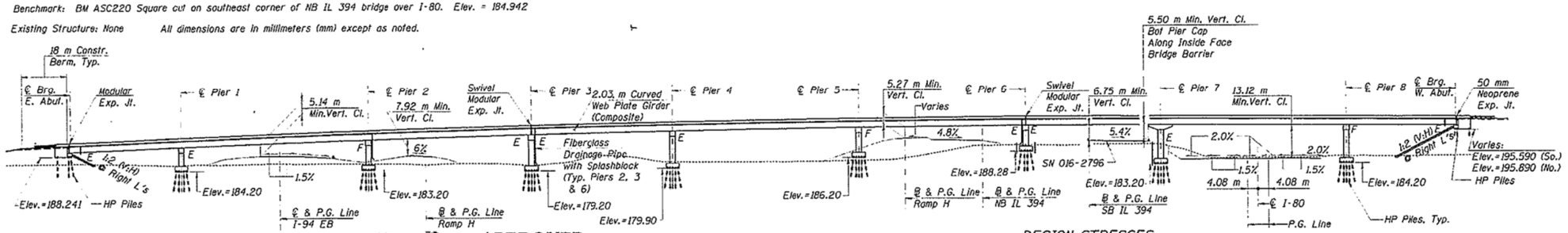

ELEVATION

*Taper starts at Sta. 120+298.00 with 1.8 m (Lt. Shldr), 2.4 m (Rt. Shldr.) Taper ends at Sta. 120+315.00 with 2.4 m (Lt. Shldr), 1.8 m (Rt. Shldr.)

**Taper starts at Sta. 20+911.00 with 0 m (3rd Lane), 3.6 m (Rt. Shldr.) Taper ends at Sta. 20+940.00 with 3.6 m (3rd Lane), 2.4 m (Rt. Shldr.)

STATE OF ILLINOIS — PHILIP C. AZZARELLO — 081-004245 — CHICAGO, ILLINOIS — LICENSED STRUCTURAL ENGINEER

APPROVED
FOR STRUCTURAL ADEQUACY ONLY
Ralph E. Anderson 7/30
ENGINEER OF BRIDGES AND STRUCTURES

Philip C. Azzarello 3-25-05
Philip C. Azzarello, S.E.
Ill. Reg. No. 081-004245
Expires 11-30-06

STAGING

The traffic patterns shown on this sheet will vary throughout the contract time. See Sheet No. 4 of 91 for additional details.

LOADING MS18 & ALT.

Allow 2.4 kN/m² for future wearing surface.

DESIGN SPECIFICATIONS

2002 AASHTO

2003 AASHTO Guide Specifications for Horizontally Curved Steel Girder Highway Bridges

DESIGN STRESSES

FIELD UNITS

f'_c = 24 MPa
f_y = 400 MPa (reinforcement)
f_y = 345 MPa (structural steel) (M270M Grade 345)
f_y = 250 MPa (structural steel) (M270M Grade 250)

SEISMIC DATA

Seismic Performance Category (SPC) = A
Bedrock Acceleration Coefficient (A) = .04
Site Coefficient (S) = 1.0

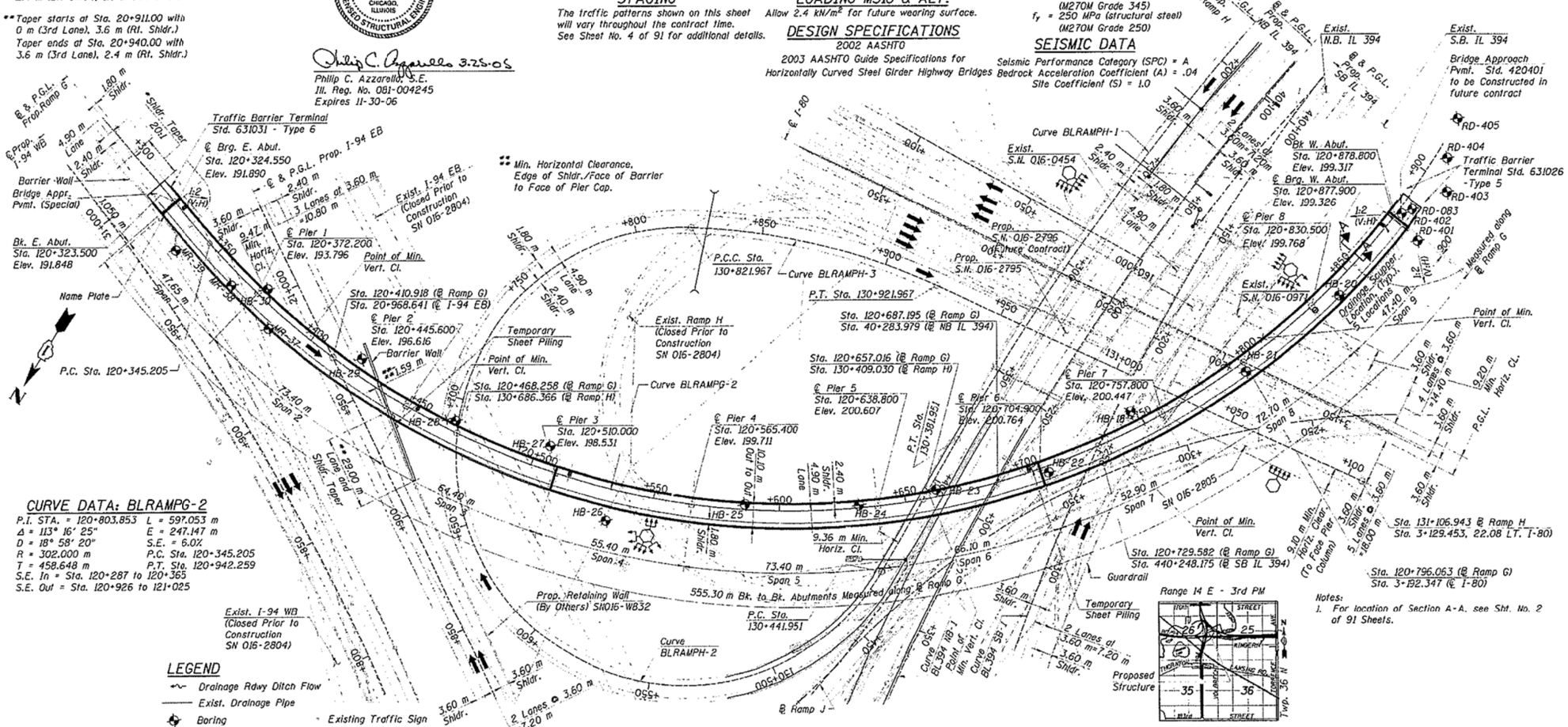

PLAN

LOCATION SKETCH

CURVE DATA: BLRAMPG-2

P.I. STA. = 120+803.853
Δ = 113° 16' 25"
D = 18° 58' 20"
R = 302.000 m
T = 458.648 m
S.E. In = Sta. 120+287 to 120+365
S.E. Out = Sta. 120+926 to 121+025
L = 597.053 m
E = 247.147 m
S.E. = 6.0%
P.C. Sta. 120+345.205
P.T. Sta. 120+942.259

LEGEND

- Drainage Rdwy Ditch Flow
- Exist. Drainage Pipe
- Boring
- Existing Guardrail
- Existing High Mast Light Tower
- Existing Traffic Sign
- Existing Light Pole
- Existing Tree
- Proposed High Mast Light

Notes:
1. For location of Section A-A, see Sht. No. 2 of 91 Sheets.

MODEL: Default
FILE NAME: pw:\\dameroom.dot.illinois.gov:PWIDOT\Documents\IDOT Offices\District 1\Projects\D132320\CADData\Design\D132320-exepsh.dgn

USER NAME = diazia	DESIGNED -	REVISED -	STATE OF ILLINOIS DEPARTMENT OF TRANSPORTATION
	DRAWN -	REVISED -	
PLOT SCALE = 100.0000 ' / in.	CHECKED -	REVISED -	
PLOT DATE = 12/6/2019	DATE -	REVISED -	

EXISTING GENERAL PLAN
SN: 016-2804

SCALE: | SHEET OF SHEETS | STA. TO STA.

VAR. RTE.	SECTION	COUNTY	TOTAL SHEETS	SHEET NO.
VAR.	2019-155-BR	VARIOUS	107	65
		CONTRACT NO. 62K32		
	ILLINOIS	FED. AID PROJECT		

FOR INFORMATION ONLY

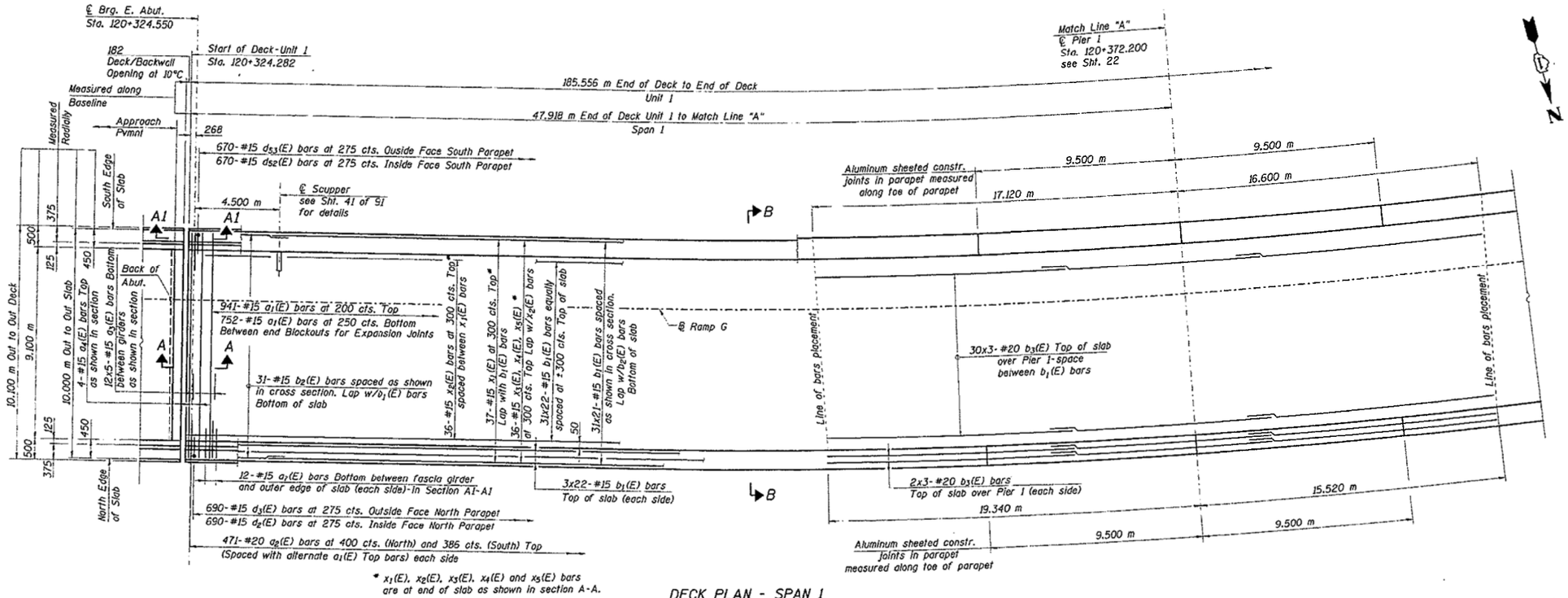

DECK PLAN - SPAN 1

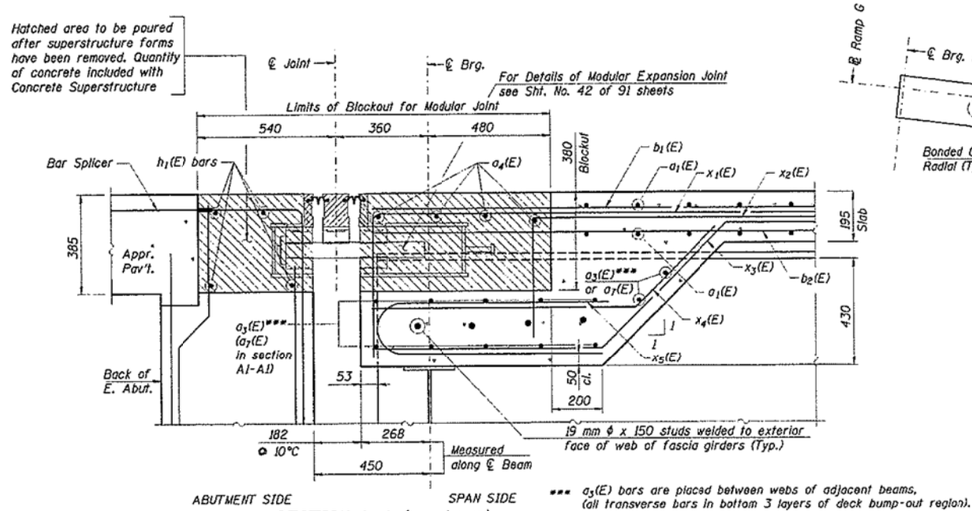

*** a_3(E) bars are placed between webs of adjacent beams, (all transverse bars in bottom 3 layers of deck bump-out region).

SECTION A-A (as shown)
SECTION A1-A1 similar
(Not all reinforcement shown in Abutment)

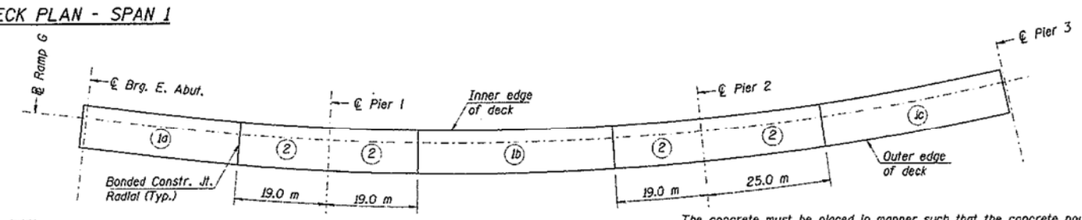

DECK POURING SEQUENCE

The concrete must be placed in manner such that the concrete poured at the beginning of a day's pour does not cure until all the concrete for that day is in place.

Notes:

1. Span dimensions given along baseline.
2. For deck cross section B-B, see Sht. No. 24.
3. For parapet reinforcement, see Sheets No's 24-26.
4. For localized scupper reinforcement and Bill of Material, see Sht. No. 39.
5. Typical lap splice lengths for reinforcement are based on a class C lap with 0.8 reduction for min. spacing:
   #15 bars - 510
   #20 bars - 640
6. Transverse reinforcement spacing is at outer edge. The transverse bars shall be placed radially and spacing along inner edge due to deck curvature is approximately:

Outer spa.	Inner spa.
200	193
250	242

7. All bars designated (E) are epoxy coated.
8. For E. Abutment Reinforcement in blockout, see Sheets No's 70 & 71.
9. For E. Abutment Modular Joint Details, see Sht. No. 42.
10. Bars indicated thus "12x5-#15 etc." indicate 12 lines of bars with 5 lengths per line.
11. Place d (E) series parapet bars to avoid Aluminum Sheeted Joint location in parapet.
12. All dimensions are in millimeters (mm) except as noted.

MODEL: Default
FILE NAME: pw:\\illanroom.dot.illinois.gov:PWIDOT\Documents\IDOT Offices\District 1\Projects\D132320\CADData\Design\D132320-ecrsalt.dgn

USER NAME = diazia	DESIGNED -	REVISED -	STATE OF ILLINOIS DEPARTMENT OF TRANSPORTATION
	DRAWN -	REVISED -	
PLOT SCALE = 100.0000 ' / in.	CHECKED -	REVISED -	
PLOT DATE = 12/6/2019	DATE -	REVISED -	

EXISTING DECK PLAN
SN: 016-2804

SCALE: | SHEET OF SHEETS | STA. TO STA.

VAR. RTE.	SECTION	COUNTY	TOTAL SHEETS	SHEET NO.
VAR.	2019-155-BR	VARIOUS	107	66
		CONTRACT NO. 62K32		
		ILLINOIS	FED. AID PROJECT	

FOR INFORMATION ONLY

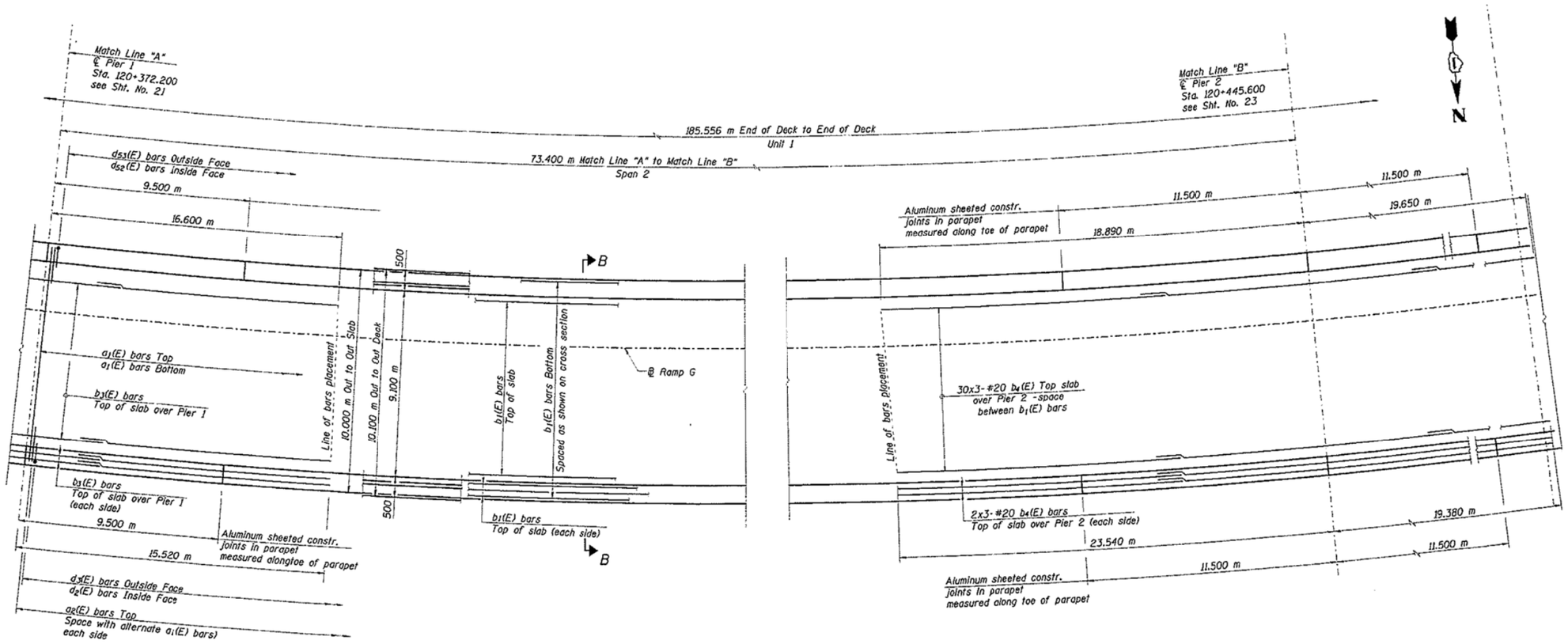

DECK PLAN - SPAN 2

Notes:

1. Span dimensions given along baseline.
2. For deck cross section B-B, see Sht. No. 24.
3. For parapet reinforcement, see Sheets Nos. 24-26.
4. For localized scupper reinforcement and Bill of Material, see Sht. 39.
5. Typical lap splice lengths for reinforcement are based on a class C lap with 0.8 reduction for min. spacing:
   #15 bars - 510
   #20 bars - 640
6. Transverse reinforcement spacing is at outer edge. The transverse bars shall be placed radially and spacing along inner edge due to deck curvature is approximately:

Outer spa.	Inner spa.
200	~193
250	~242

7. All bars designated (E) are epoxy coated.
8. Bars indicated thus "12x5-#15 etc." indicates 12 lines of bars with 5 lengths per line.
9. Place d (E) series parapet bars to avoid Aluminum Sheeted Joint Location in Parapets.
10. All dimensions are in millimeters (mm) except as noted.

MODEL: Default
FILE NAME: pw:\\ubancoom.dot.illinois.gov:PWIDOT\Documents\IDOT Offices\District 1\Projects\D132320\CADData\Design\D132320-ereport.dgn

USER NAME = diazia	DESIGNED -	REVISED -	
	DRAWN -	REVISED -	
PLOT SCALE = 100.0000 ' / in.	CHECKED -	REVISED -	
PLOT DATE = 12/6/2019	DATE -	REVISED -	

STATE OF ILLINOIS
DEPARTMENT OF TRANSPORTATION

EXISTING DECK PLAN
SN: 016-2804

SCALE: | SHEET OF SHEETS | STA. TO STA.

VAR. RTE.	SECTION	COUNTY	TOTAL SHEETS	SHEET NO.
VAR.	2019-155-BR	VARIOUS	107	67
		CONTRACT NO. 62K32		
	ILLINOIS	FED. AID PROJECT		

FOR INFORMATION ONLY

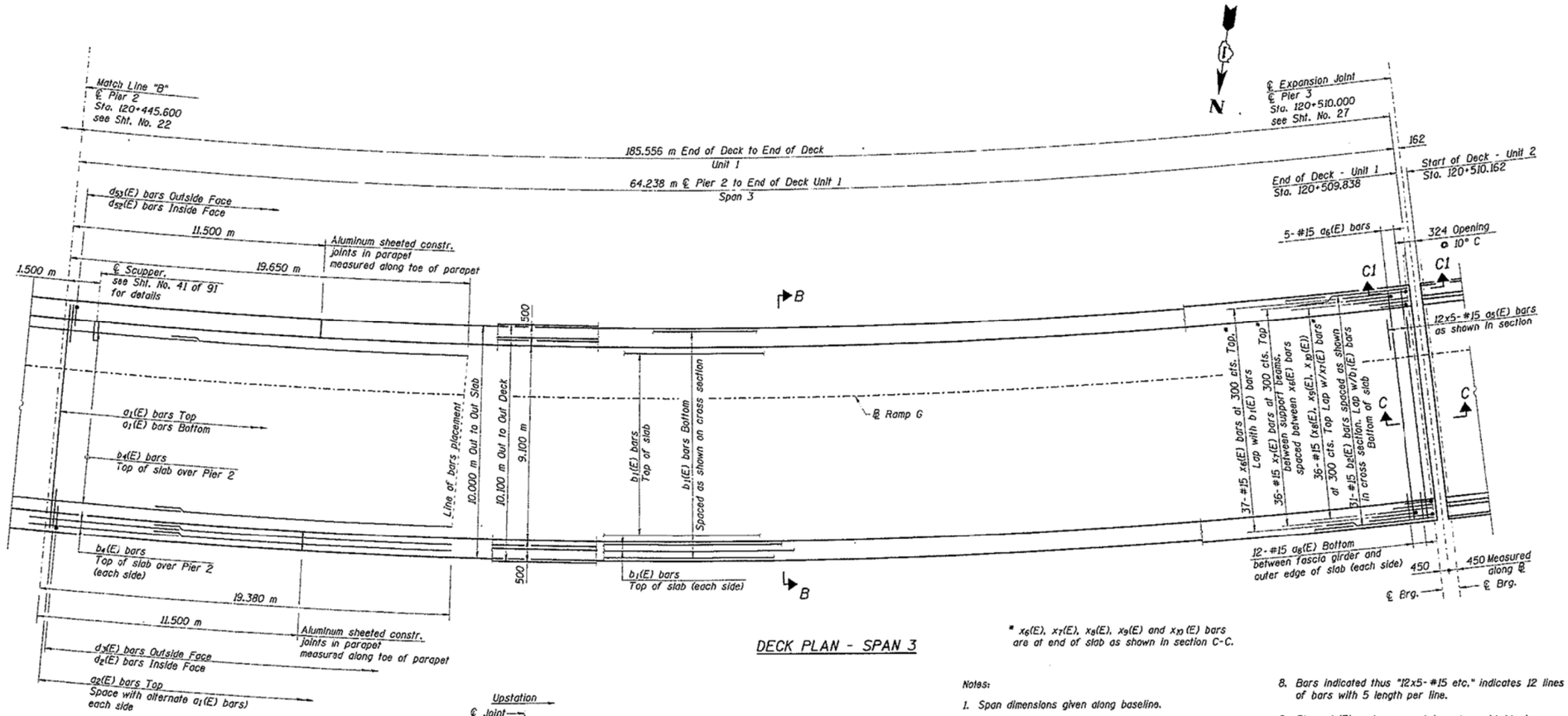

DECK PLAN - SPAN 3

* $x_6(E)$, $x_7(E)$, $x_8(E)$, $x_9(E)$ and $x_{10}(E)$ bars are at end of slab as shown in section C-C.

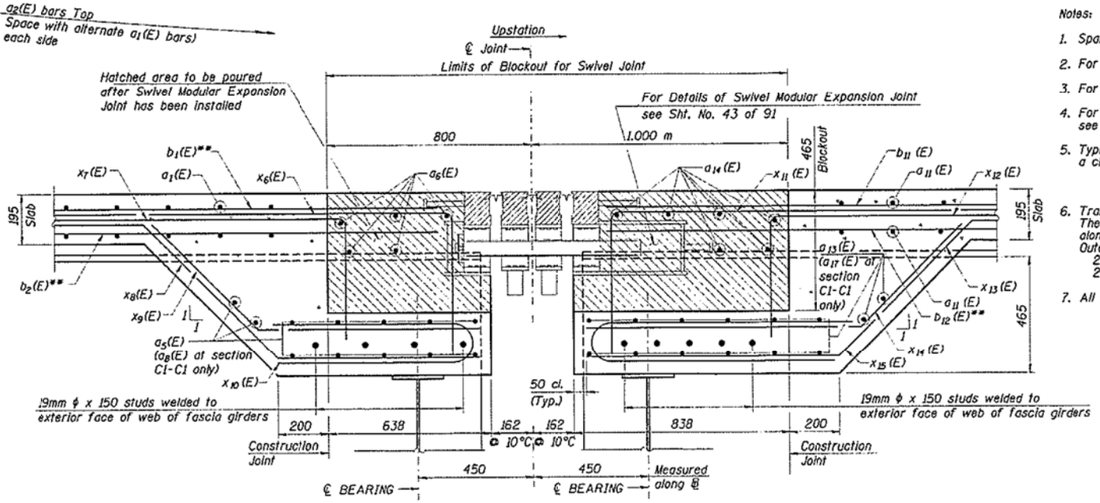

SECTION C-C (as shown) — SECTION C1-C1 (similar)

Notes:

1. Span dimensions given along baseline.
2. For deck cross section B-B, see Sht. No. 24.
3. For parapet reinforcement. see Sheets Nos. 24-26.
4. For localized scupper reinforcement and Bill of Material, see Sht. No. 39.
5. Typical lap splice lengths for reinforcement are based on a class C lap with 0.8 reduction for min. spacing:
   #15 bars - 510
   #20 bars - 640
6. Transverse reinforcement spacing is at outer edge. The transverse bars shall be placed radially and spacing along inner edge due to deck curvature is approximately:

Outer spa.	Inner spa.
200	~ 193
250	~ 242

7. All bars designated (E) are epoxy coated.
8. Bars indicated thus "12x5-#15 etc." indicates 12 lines of bars with 5 length per line.
9. Place d (E) series parapet bars to avoid Aluminum Sheeted Joint Location in parapets.
10. All dimensions are in millimeters except as noted.

MODEL: Default
FILE NAME: pw:\\ubaroom.dot.illinois.gov:PWIDOT\Documents\IDOT Offices\District 1\Projects\D132320\CADData\Design\D132320-ereport.dgn

USER NAME = diazia	DESIGNED -	REVISED -	
	DRAWN -	REVISED -	
PLOT SCALE = 100.0000 ' / in.	CHECKED -	REVISED -	
PLOT DATE = 12/6/2019	DATE -	REVISED -	

STATE OF ILLINOIS
DEPARTMENT OF TRANSPORTATION

EXISTING DECK PLAN
SN: 016-2804

SCALE: | SHEET OF SHEETS | STA. TO STA.

VAR. RTE.	SECTION	COUNTY	TOTAL SHEETS	SHEET NO.
VAR.	2019-155-BR	VARIOUS	107	68

CONTRACT NO. 62K32

ILLINOIS | FED. AID PROJECT

FOR INFORMATION ONLY

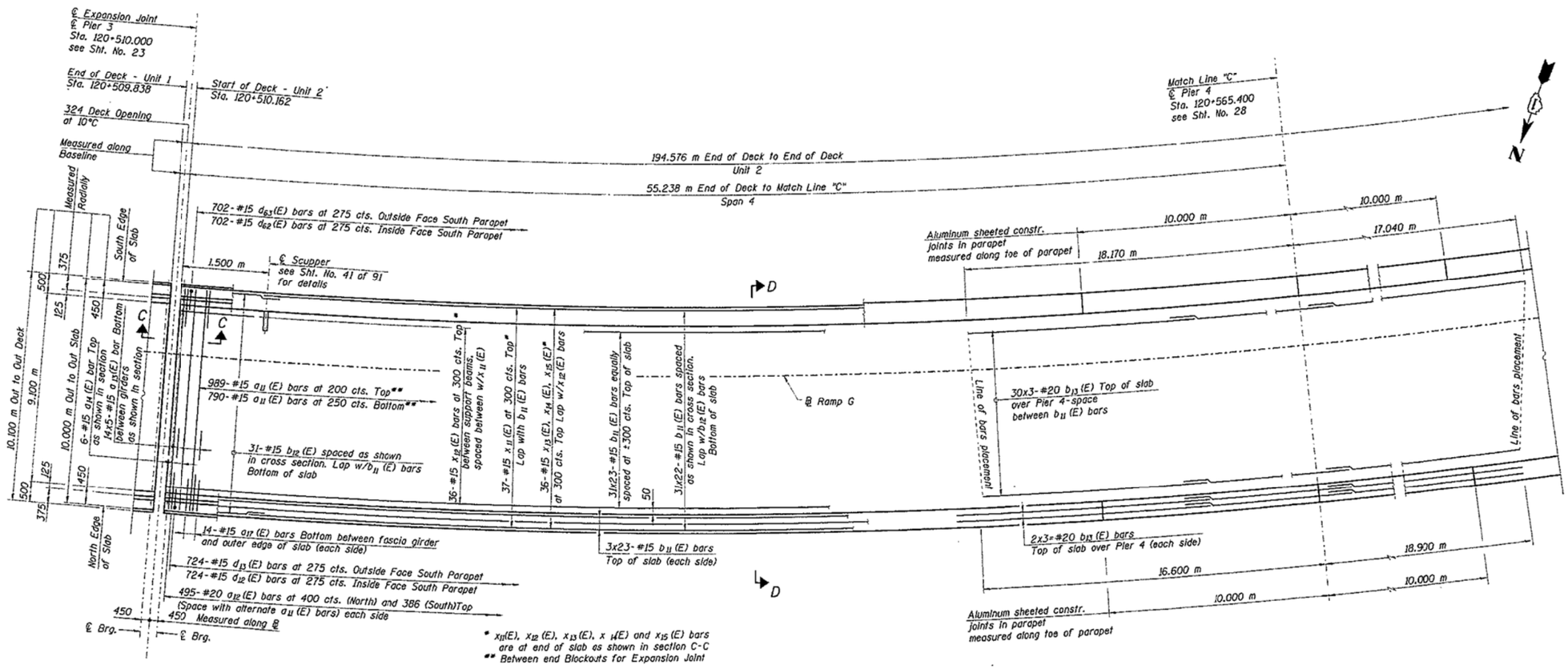

DECK PLAN - SPAN 4

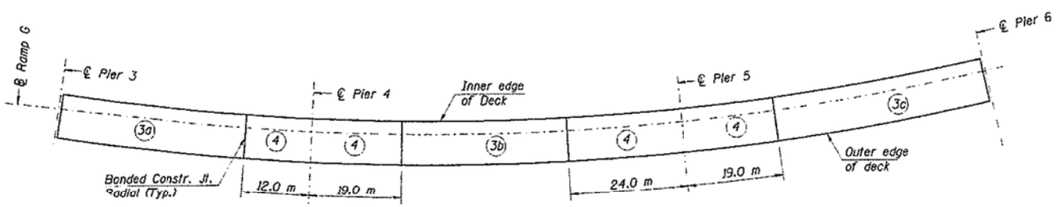

DECK POURING SEQUENCE

The concrete must be placed in manner such that the concrete poured at the beginning of a day's pour does not cure until all the concrete for that day is in place.

Notes:

1. Span dimensions given along baseline.
2. For deck cross section D-D, see Sht. No. 30.
3. For parapet reinforcement, see Sheets Nos. 30-32.
4. For localized scupper reinforcement and Bill of Material, see Sht. No. 39.
5. Typical lap splice lengths for reinforcement are based on a class C lap with 0.8 reduction for min. spacing:
   #15 bars - 510
   #20 bars - 640
6. Transverse reinforcement spacing is at outer edge. The transverse bars shall be placed radially and spacing along inner edge due to deck curvature is approximately:

Outer spa.	Inner spa.
200	~193
250	~242

7. All bars designated (E) are epoxy coated.
8. For Expansion Joint cross section C-C, see Sht. No. 23.
9. Bars indicated thus "12x5-#15 etc." indicates 12 lines of bars with 5 lengths per line.
10. Place d (E) series parapet bars to avoid Aluminum Sheeted Joint Locations in parapets.
11. All dimensions are in millimeters (mm) except as noted.

MODEL: Default
FILE NAME: pw:\\planroom.dot.illinois.gov:PWIDOT\Documents\IDOT Offices\District 1\Projects\D132320\CADData\Design\D132320-ersplr.dgn

USER NAME = diazia	DESIGNED -	REVISED -	STATE OF ILLINOIS DEPARTMENT OF TRANSPORTATION	EXISTING DECK PLAN SN: 016-2804			VAR. RTE.	SECTION	COUNTY	TOTAL SHEETS	SHEET NO.
	DRAWN -	REVISED -					VAR.	2019-155-BR	VARIOUS	107	69
PLOT SCALE = 100.0000 ' / in.	CHECKED -	REVISED -							CONTRACT NO. 62K32		
PLOT DATE = 12/6/2019	DATE -	REVISED -		SCALE:	SHEET OF SHEETS	STA. TO STA.		ILLINOIS	FED. AID PROJECT		

FOR INFORMATION ONLY

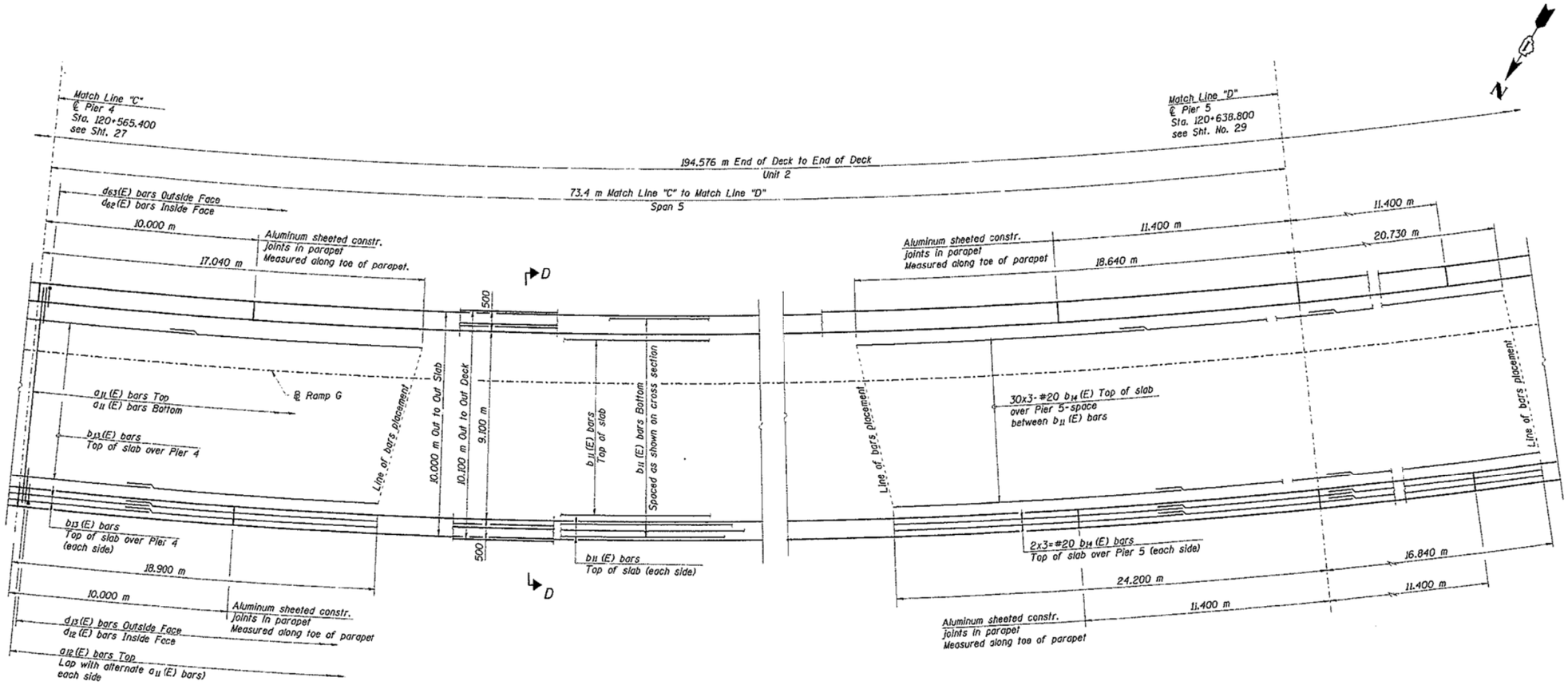

DECK PLAN -SPAN 5

Notes:

1. Span dimensions given along baseline.
2. For deck cross section D-D, see Sht. No. 30.
3. For parapet reinforcement, see Sheets Nos. 30-32.
4. For localized scupper reinforcement and Bill of Material, see Sht. No. 39.
5. Typical lap splice lengths for reinforcement are based on a class C lap with 0.8 reduction for min. spacing:
   #15 bars - 510
   #20 bars - 640
6. Transverse reinforcement spacing is at outer edge. The transverse bars shall be placed radially and spacing along inner edge due to deck curvature is approximately:

Outer spa.	Inner spa.
200	~ 193
250	~ 242

7. All bars designated (E) are epoxy coated.
8. Bars indicated "12x5-#15 etc." indicates 12 lines of bars with 5 lengths per line.
9. Place d (E) series parapet bars to avoid Aluminum Sheeted joint Locations in parapets.
10. All dimensions are in millimeters (mm) except as noted.

MODEL: Default
FILE NAME: pw:\\ubanroom.dot.illinois.gov:PWIDOT\Documents\IDOT Offices\District 1\Projects\D132320\CADData\Design\D132320-eepair.dgn

USER NAME = diazia	DESIGNED -	REVISED -	
	DRAWN -	REVISED -	
PLOT SCALE = 100.0000 ' / in.	CHECKED -	REVISED -	
PLOT DATE = 12/6/2019	DATE -	REVISED -	

STATE OF ILLINOIS
DEPARTMENT OF TRANSPORTATION

EXISTING DECK PLAN
SN: 016-2804

SCALE: | SHEET OF SHEETS | STA. TO STA.

VAR. RTE.	SECTION	COUNTY	TOTAL SHEETS	SHEET NO.
VAR.	2019-155-BR	VARIOUS	107	70

CONTRACT NO. 62K32

ILLINOIS | FED. AID PROJECT

FOR INFORMATION ONLY

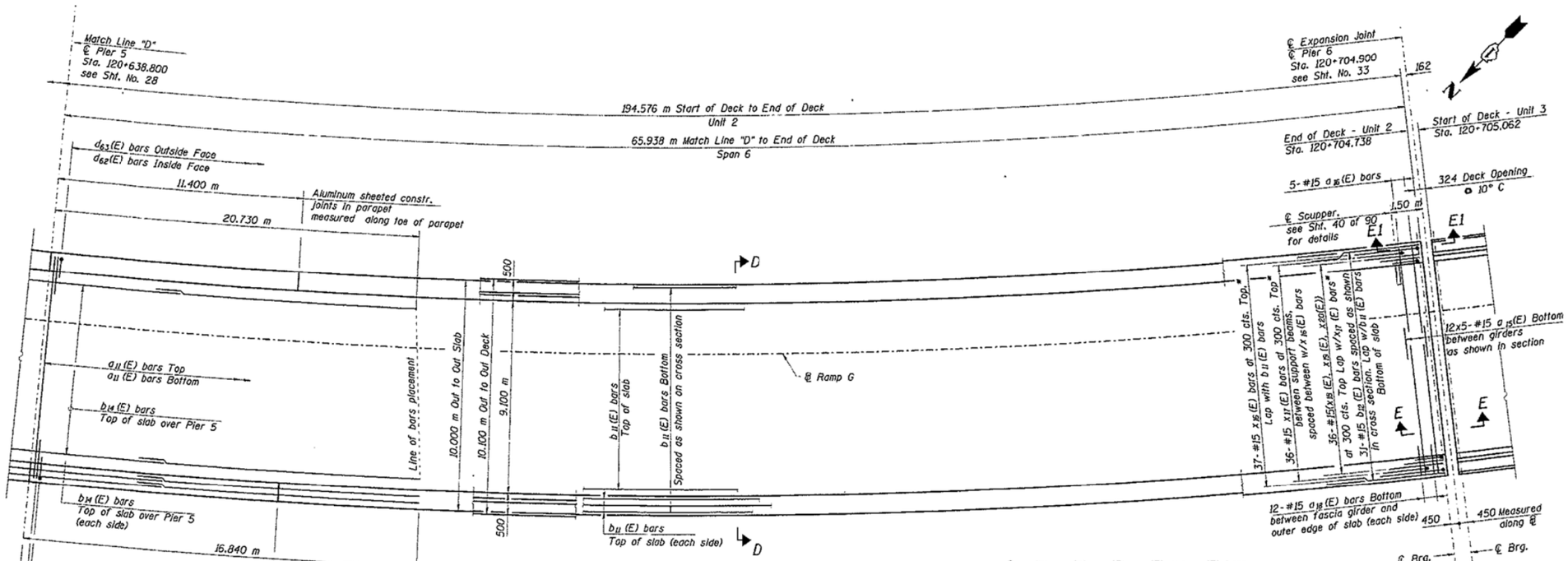

DECK PLAN - SPAN 6

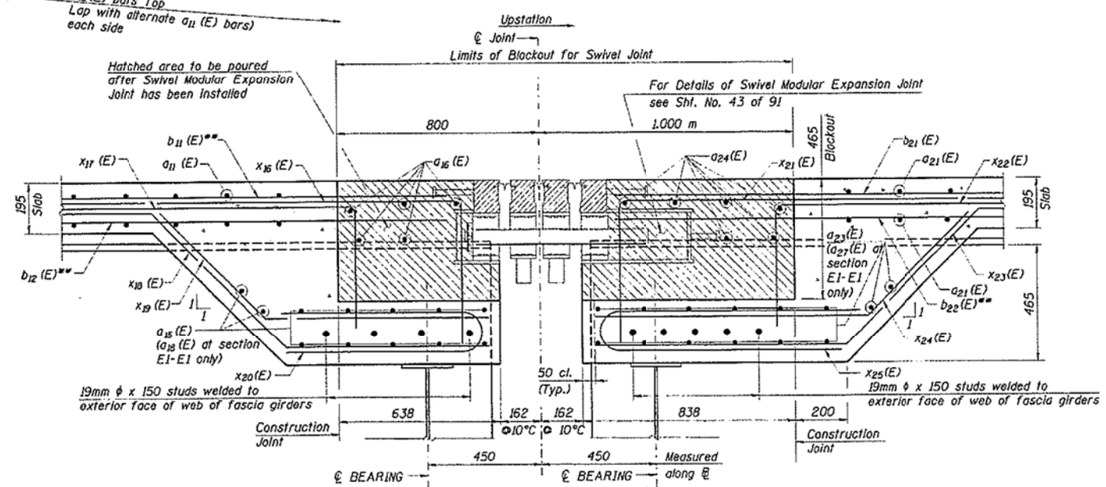

SECTION E-E (as shown)

SECTION E1-E1 (similar)

Notes:

1. Span dimensions given along baseline.
2. For deck cross section D-D, see Sht. No. 30.
3. For parapet reinforcement, see Sheets No's 30-32.
4. For localized scupper reinforcement and Bill of Material, see Sht. No. 39.
5. Typical lap splice lengths for reinforcement are based on a class C lap with 0.8 reduction for min. spacing:
   #15 bars - 510
   #20 bars - 640
6. Transverse reinforcement spacing is at outer edge. The transverse bars shall be placed radially and spacing along inner edge due to deck curvature is approximately:

Outer spa.	Inner spa.
200	~ 193
250	~ 242

7. All bars designated (E) are epoxy coated.
8. Bars indicated thus "12x5-#15 etc." indicates 12 lines of bars with 5 lengths per line.
9. Place d (E) series parapet bars to avoid Aluminum Sheeted Joint Locations in parapets.
10. All dimensions are in millimeters (mm) except as noted.

MODEL: Default
FILE NAME: pw:\\ulanroom.dot.illinois.gov:PWIDOT\Documents\IDOT Offices\District 1\Projects\D132320\CADData\Design\D132320-ewsalt.dgn

USER NAME = diazia	DESIGNED -	REVISED -	
	DRAWN -	REVISED -	
PLOT SCALE = 100.0000 ' / in.	CHECKED -	REVISED -	
PLOT DATE = 12/6/2019	DATE -	REVISED -	

STATE OF ILLINOIS
DEPARTMENT OF TRANSPORTATION

EXISTING DECK PLAN
SN: 016-2804

SCALE: | SHEET OF SHEETS | STA. TO STA.

VAR. RTE.	SECTION	COUNTY	TOTAL SHEETS	SHEET NO.
VAR.	2019-155-BR	VARIOUS	107	71
		CONTRACT NO. 62K32		
		ILLINOIS	FED. AID PROJECT	

FOR INFORMATION ONLY

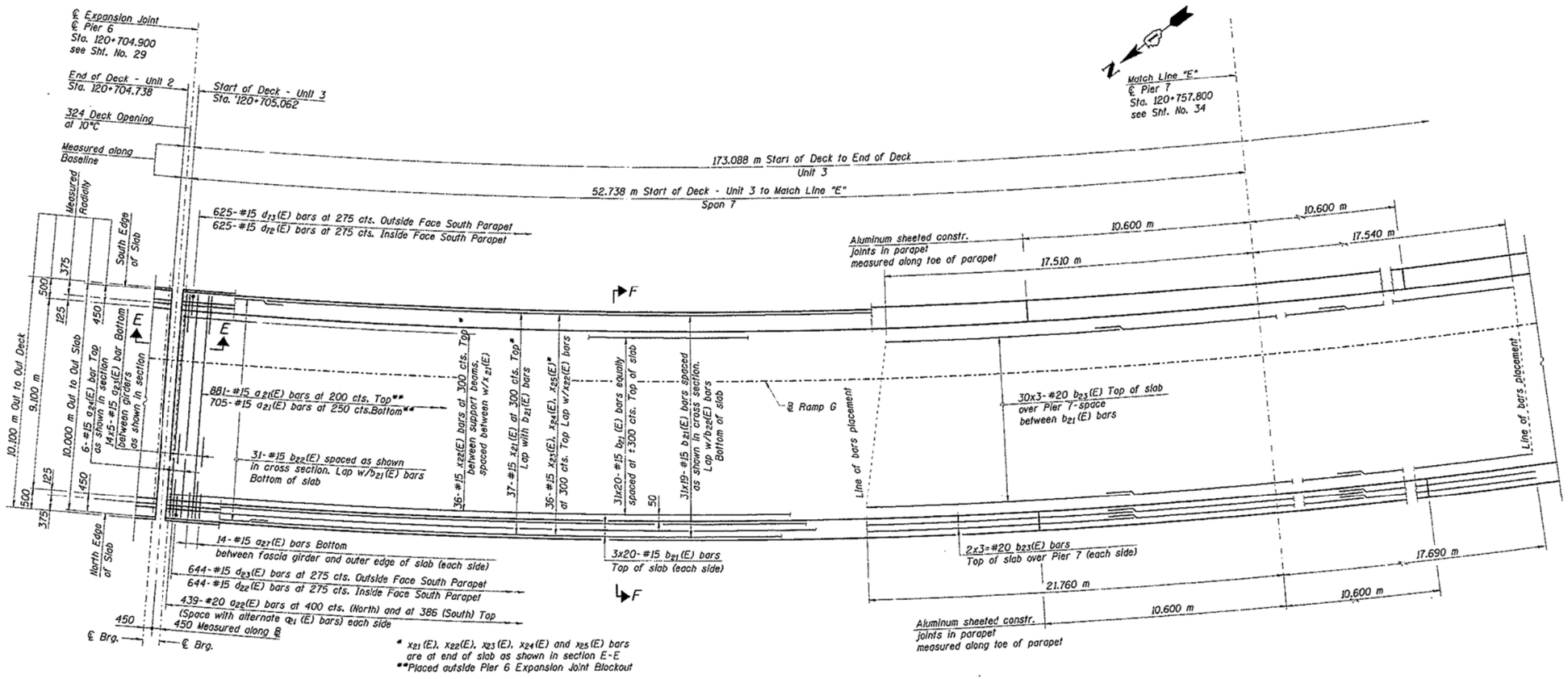

DECK PLAN - SPAN 7

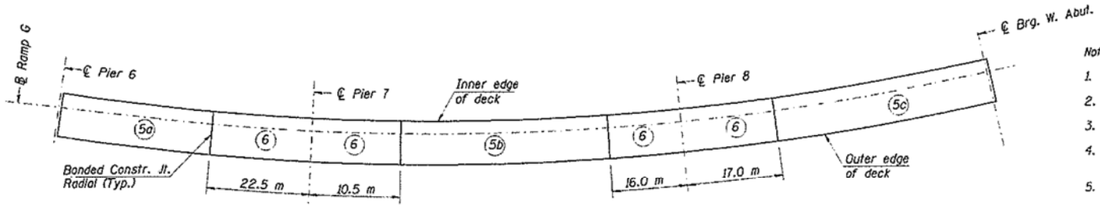

DECK POURING SEQUENCE

The concrete must be placed in manner such that the concrete poured at the beginning of a day's pour does not cure until all the concrete for that day is in place.

Notes:

1. Span dimensions given along baseline.
2. For deck cross section F-F, see Sht. No. 36.
3. For parapet reinforcement, see Sheets No's 36-38.
4. For localized scupper reinforcement and Bill of Material, see Sht. No. 39.
5. Typical lap splice lengths for reinforcement are based on a class C lap with 0.8 reduction for min. spacing:
   #15 bars - 510
   #20 bars - 640
6. Transverse reinforcement spacing is at outer edge. The transverse bars shall be placed radially and spacing along inner edge due to deck curvature is approximately:

Outer spa.	Inner spa.
200	~ 193
250	~ 242

7. All bars designated (E) are epoxy coated.
8. For Expansion Joint cross section E-E, see Sht. No. 29.
9. Bars indicated thus "12x5-#15 etc." indicates 12 lines of bars with 5 lengths per line.
10. Place d (E) series parapet bars to avoid Aluminum Sheeted Joint Locations in parapet.
11. All dimensions are in millimeters (mm) except as noted.

MODEL: Default
FILE NAME: pw:\\dhanroom.dot.illinois.gov:PWIDOT\Documents\IDOT Offices\District 1\Projects\D132320\CADData\Design\D132320-ereport.dgn

USER NAME = diazia	DESIGNED -	REVISED -	
	DRAWN -	REVISED -	
PLOT SCALE = 100.0000 ' / in.	CHECKED -	REVISED -	
PLOT DATE = 12/6/2019	DATE -	REVISED -	

STATE OF ILLINOIS
DEPARTMENT OF TRANSPORTATION

EXISTING DECK PLAN
SN: 016-2804

SCALE: | SHEET OF SHEETS | STA. TO STA.

VAR. RTE.	SECTION	COUNTY	TOTAL SHEETS	SHEET NO.
VAR.	2019-155-BR	VARIOUS	107	72

CONTRACT NO. 62K32

ILLINOIS | FED. AID PROJECT

FOR INFORMATION ONLY

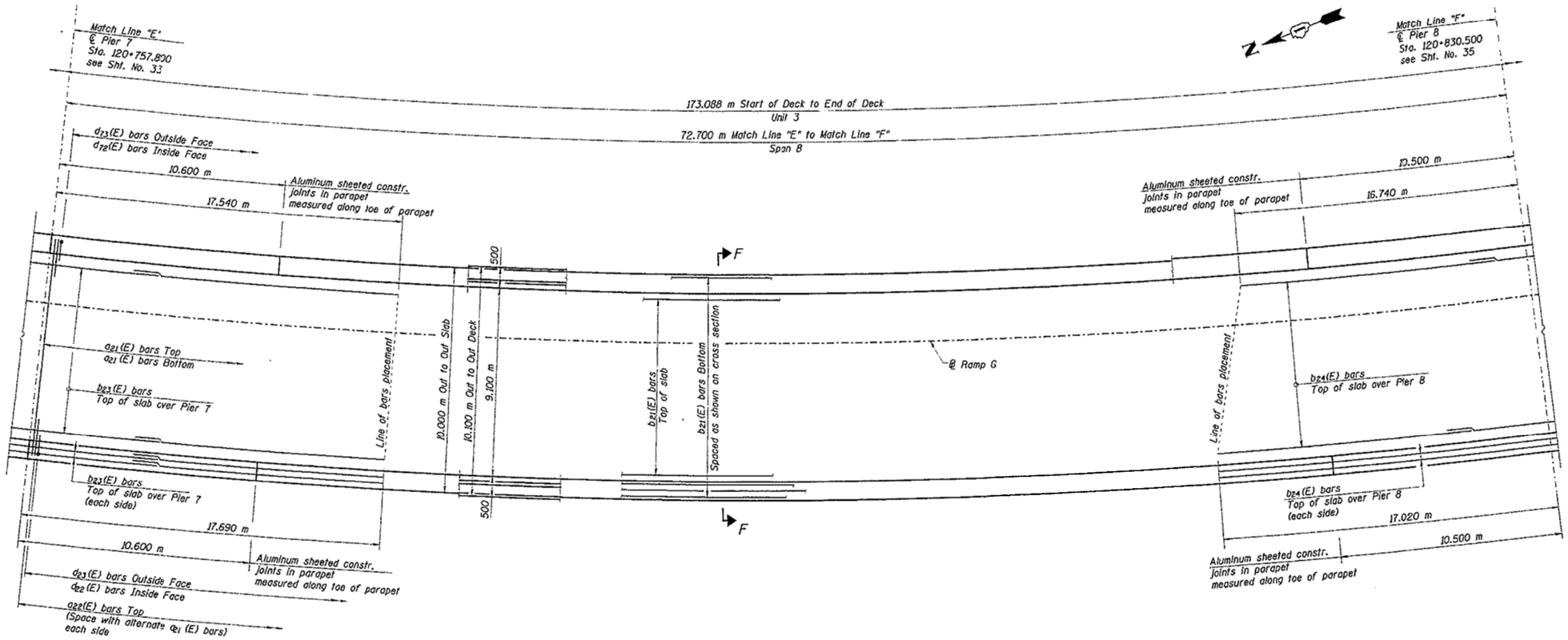

DECK PLAN - SPAN 8

Notes:

1. Span dimensions given along baseline.
2. For deck cross section F-F, see Sht. No. 36.
3. For parapet reinforcement, see Sheets No's 36-38.
4. For localized scupper reinforcement and Bill of Material, see Sht. No. 39.
5. Typical lap splice lengths for reinforcement are based on a class C lap with 0.8 reduction for min. spacing:
   #15 bars - 510
   #20 bars - 640
6. Transverse reinforcement spacing is at outer edge. The transverse bars shall be placed radially and spacing along inner edge due to deck curvature is approximately:

Outer spa.	Inner spa.
200	~ 193
250	~ 242

7. All bars designated (E) are epoxy coated.
8. Bars indicated thus "12x5-#15 etc." indicates 12 lines of bars with 5 lengths per line.
9. Place d (E) series parapet bars to avoid Aluminum Sheeted Joint Locations in parapet.
10. All dimensions are in millimeters (mm) except as noted.

MODEL: Default
FILE NAME: pw:\\ahnoom.dot.illinois.gov:PWIDOT\Documents\IDOT Offices\District 1\Projects\D132320\CADData\Design\D132320-ex-salt.dgn

USER NAME = diazia	DESIGNED -	REVISED -	
	DRAWN -	REVISED -	
PLOT SCALE = 100.0000 ' / in.	CHECKED -	REVISED -	
PLOT DATE = 12/6/2019	DATE -	REVISED -	

STATE OF ILLINOIS
DEPARTMENT OF TRANSPORTATION

EXISTING DECK PLAN
SN: 016-2804

SCALE: | SHEET OF SHEETS | STA. TO STA.

VAR. RTE.	SECTION	COUNTY	TOTAL SHEETS	SHEET NO.
VAR.	2019-155-BR	VARIOUS	107	73

CONTRACT NO. 62K32

ILLINOIS | FED. AID PROJECT

FOR INFORMATION ONLY

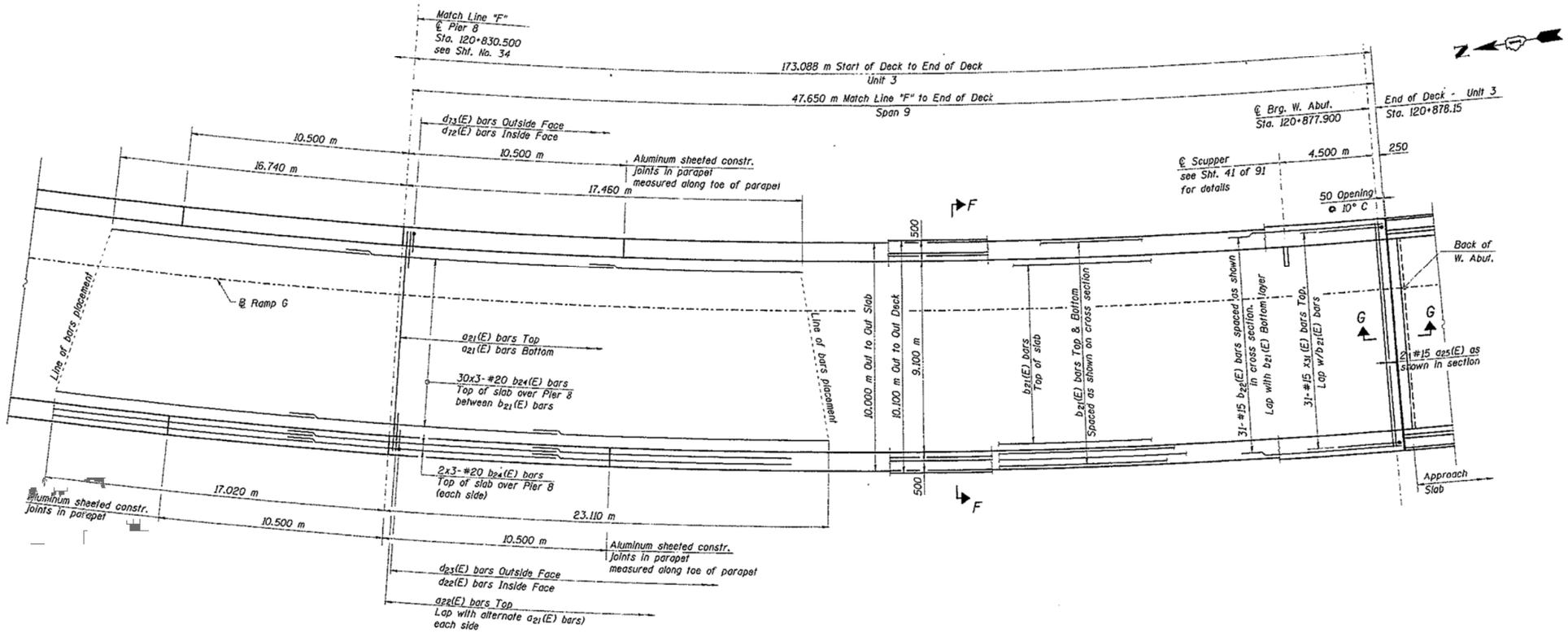

DECK PLAN - SPAN 9

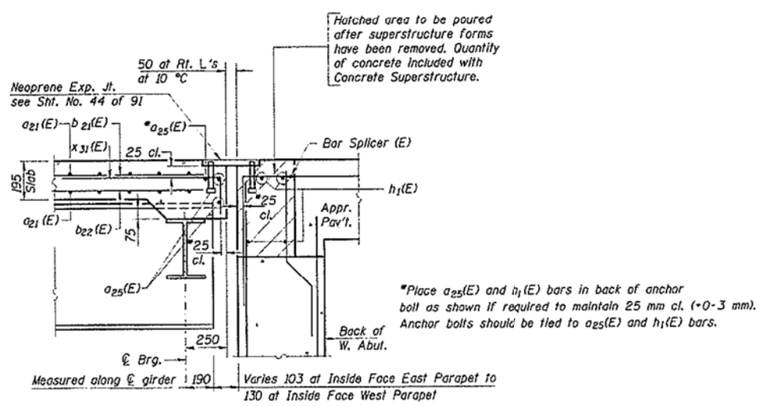

SECTION G-G

(Section Thru W. Abut.)

Notes:

1. Span dimensions given along baseline.
2. For deck cross section F-F, see Sht. No. 36.
3. For parapet reinforcement, see Sheets No's 36-38.
4. For localized scupper reinforcement and Bill of Material, see Sht. No. 39.
5. Typical lap splice lengths for reinforcement are based on a class C lap with 0.8 reduction for min. spacing:
   #15 bars - 510
   #20 bars - 640
6. Transverse reinforcement spacing is at outer edge. The transverse bars shall be placed radially and spacing along inner edge due to deck curvature is approximately:

Outer spa.	Inner spa.
200	~ 193
250	~ 242

7. All bars designated (E) are epoxy coated.
8. For W. Abutment reinforcement in blockout, see Sheets No's 72 & 73.
9. For Neoprene Expansion Joint Detail, see Sht. No. 44.
10. Bars indicated thus "12x5-#15 etc." indicates 12 lines of bars with 5 lengths per line.
11. Place d (E) series parapet bars to avoid aluminum sheeted joint location in parapet.
12. All dimensions are in millimeters (mm) except as noted.

MODEL: Default
FILE NAME: pw:\\urbanroom.dot.illinois.gov:PWIDOT\Documents\IDOT Offices\District 1\Projects\D132320\CADData\Design\D132320-ergsdk.dgn

USER NAME = diazia	DESIGNED -	REVISED -	
	DRAWN -	REVISED -	
PLOT SCALE = 100.0000 ' / in.	CHECKED -	REVISED -	
PLOT DATE = 12/6/2019	DATE -	REVISED -	

STATE OF ILLINOIS
DEPARTMENT OF TRANSPORTATION

EXISTING DECK PLAN
SN: 016-2804

SCALE: | SHEET OF SHEETS | STA. TO STA.

VAR. RTE.	SECTION	COUNTY	TOTAL SHEETS	SHEET NO.
VAR.	2019-155-BR	VARIOUS	107	74
		CONTRACT NO. 62K32		
		ILLINOIS FED. AID PROJECT		

FOR INFORMATION ONLY

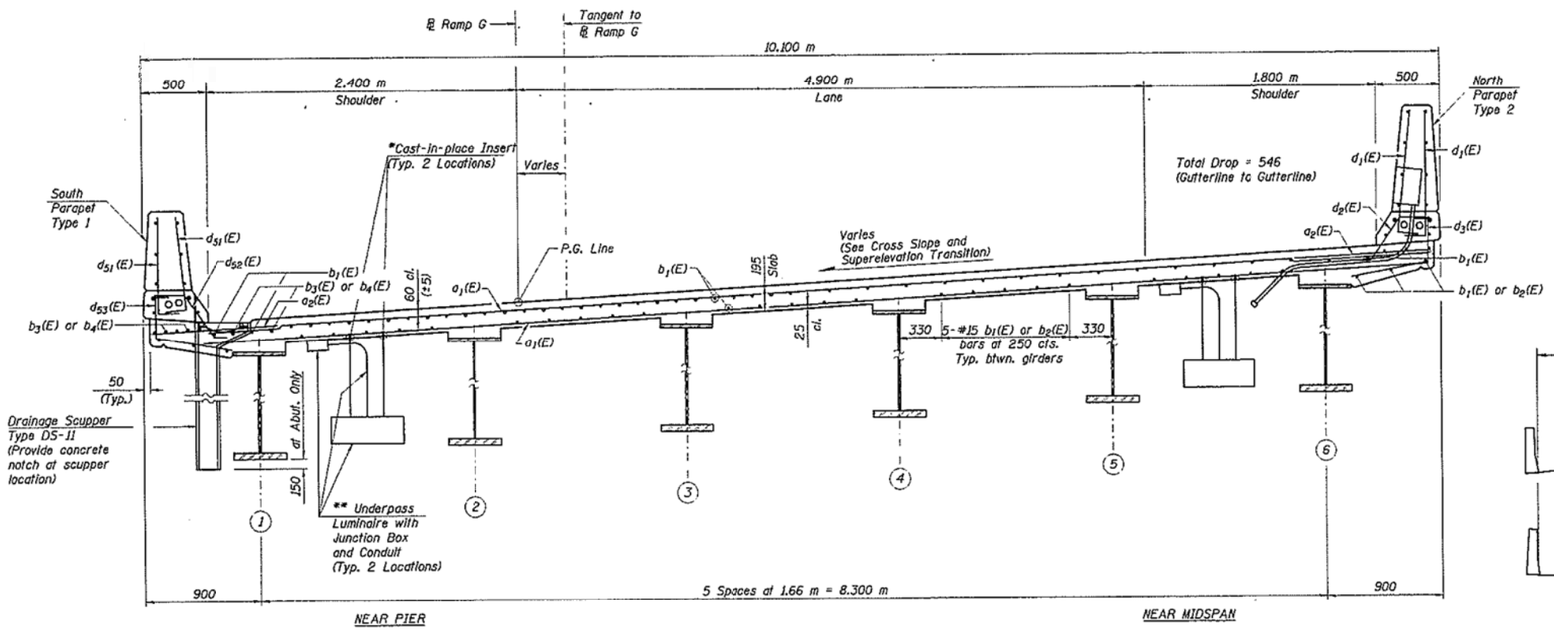

*See Electrical Drawings for location and type.
Paid under Electrical Contract but installed by Bridge Contractor.
Installation included for payment under Concrete Superstructure.
Bridge Contractor to coordinate with Electrical Contractor.

**Elements paid and installed under Electrical Contract.

CROSS SECTION B-B

Looking Up Station
All dimensions are measured radially

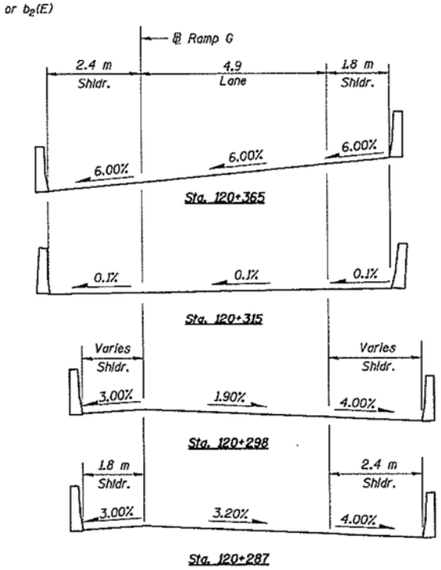

CROSS SLOPE & SUPERELEVATION TRANSITION

Notes:

1. Work this Sheet with sheet Nos. 21-23 and 25-26.
2. See Sht. No. 41 of 91 for drainage scupper.
3. All dimension are in millimeters (mm) except as noted.

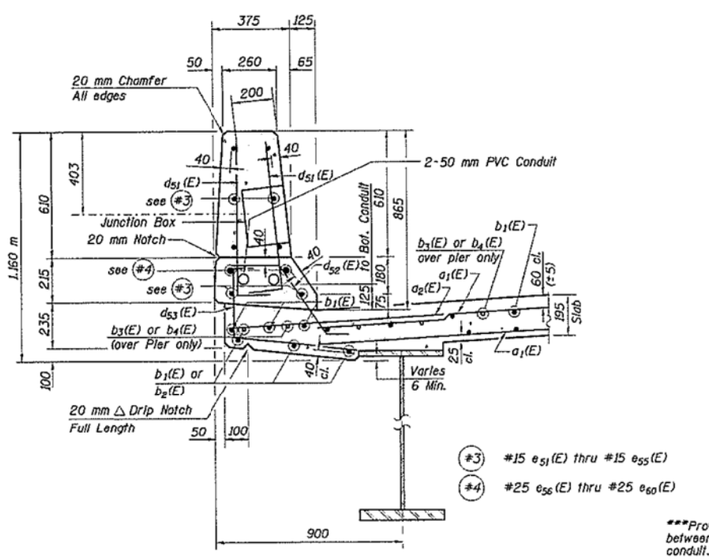

(#3) #15 e51(E) thru #15 e55(E)

(#4) #25 e56(E) thru #25 e60(E)

SECTION THRU SOUTH PARAPET TYPE 1

***Provide 25 mm min. clear between conduits and d1(E) bar conduit.

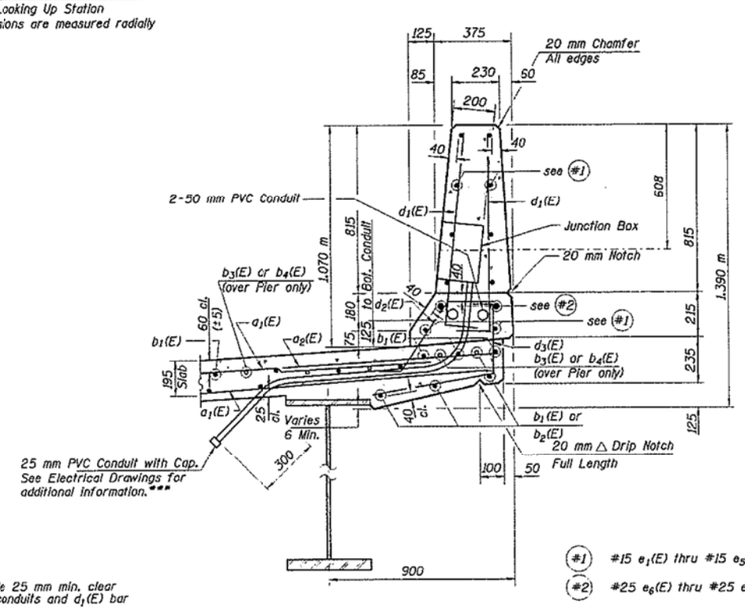

(#1) #15 e1(E) thru #15 e5(E)

(#2) #25 e6(E) thru #25 e10(E)

SECTION THRU NORTH PARAPET TYPE 2

USER NAME = diazia	DESIGNED -	REVISED -	STATE OF ILLINOIS DEPARTMENT OF TRANSPORTATION	EXISTING CROSS SECTION SN: 016-2804	VAR. RTE.	SECTION	COUNTY	TOTAL SHEETS	SHEET NO.
	DRAWN -	REVISED -			VAR.	2019-155-BR	VARIOUS	107	75
PLOT SCALE = 100.0000 ' / in.	CHECKED -	REVISED -					CONTRACT NO. 62K32		
PLOT DATE = 12/6/2019	DATE -	REVISED -		SCALE: SHEET OF SHEETS STA. TO STA.			ILLINOIS FED. AID PROJECT		

MODEL: Default
FILE NAME: pw:\\ildarroom.dot.illinois.gov:PWIDOT\Documents\IDOT Offices\District 1\Projects\D132320\CADData\Design\D132320-ersalt.dgn

FOR INFORMATION ONLY

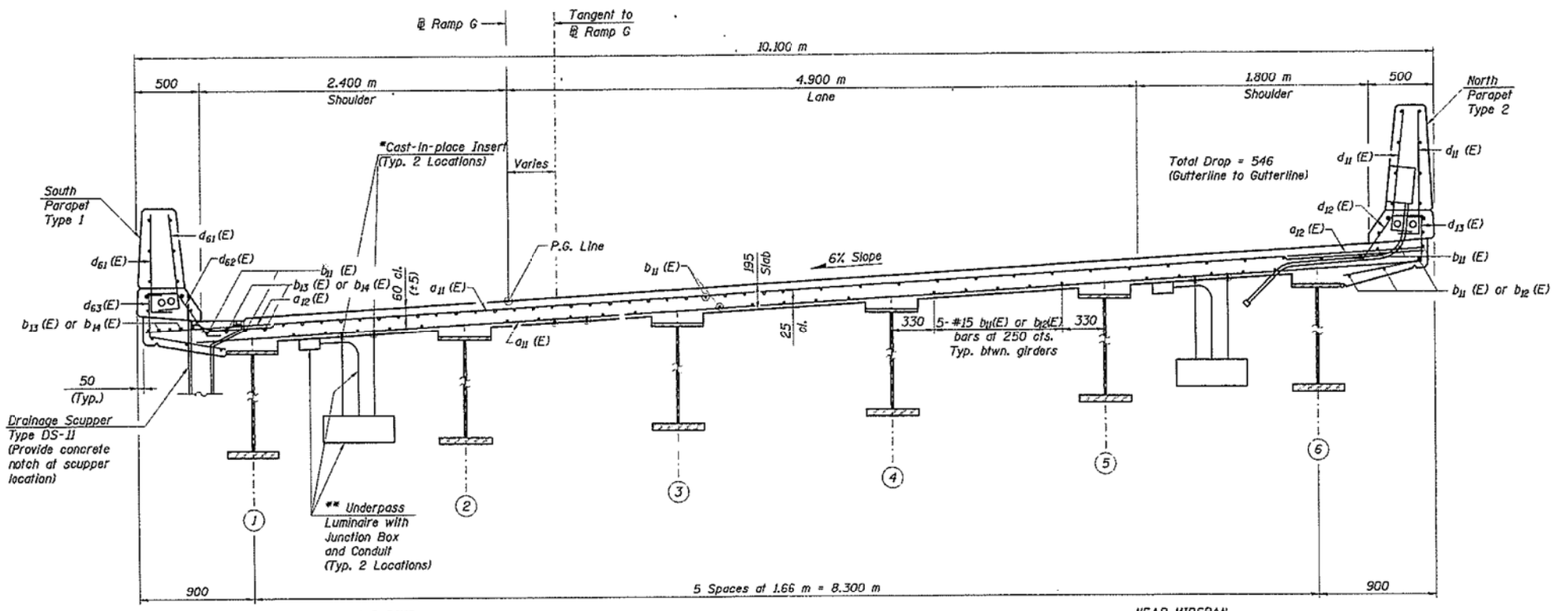

*See Electrical Drawings for location and type. Paid under Electrical Contract but installed by Bridge Contractor. Installation included for payment under Concrete Superstructure. Bridge Contractor to coordinate with Electrical Contractor.

**Elements paid and installed under Electrical Contract.

CROSS SECTION D-D

Looking Up Station
All dimensions are measured radially

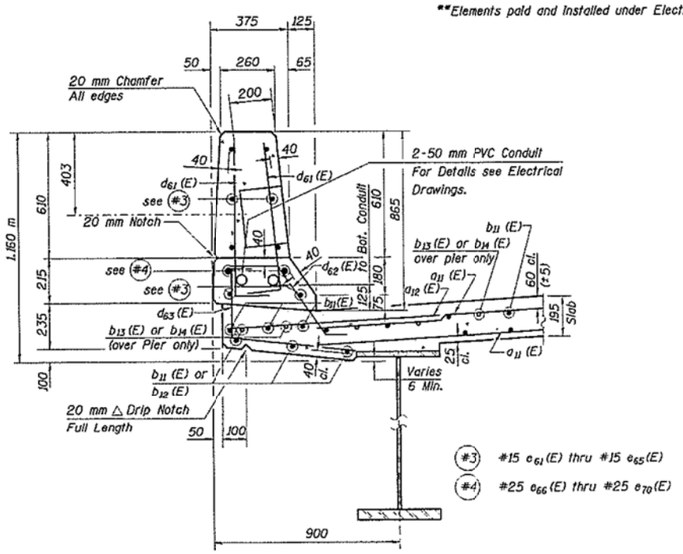

SECTION THRU SOUTH PARAPET TYPE 1

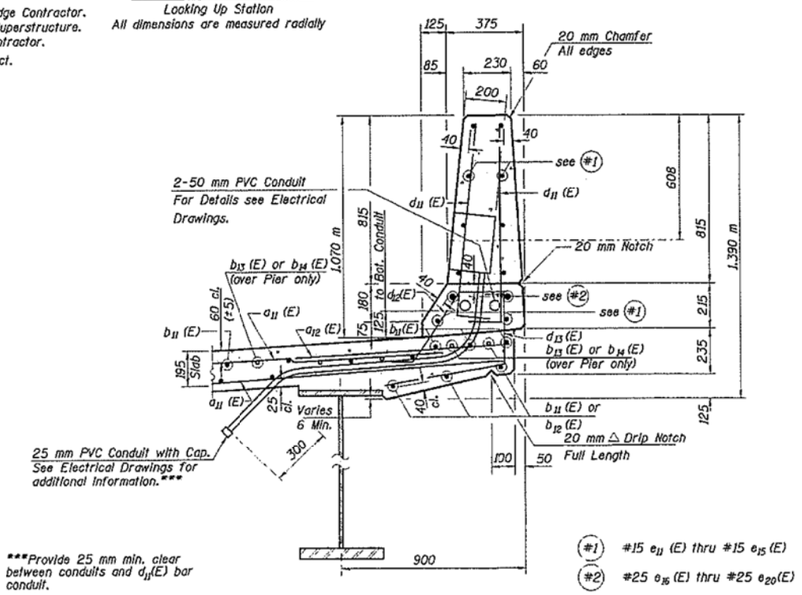

***Provide 25 mm min. clear between conduits and d11(E) bar conduit.

SECTION THRU NORTH PARAPET TYPE 2

Notes:

1. Work this Sheet with Sheets Nos. 27-29 and 31-32 of 91.
2. See Sht. No. 41 of 91 for drainage scupper.
3. All dimension are in millimeters (mm) except as noted.

USER NAME = diazia	DESIGNED -	REVISED -	STATE OF ILLINOIS DEPARTMENT OF TRANSPORTATION
	DRAWN -	REVISED -	
PLOT SCALE = 100.0000 ' / in.	CHECKED -	REVISED -	
PLOT DATE = 12/6/2019	DATE -	REVISED -	

EXISTING CROSS SECTION
SN: 016-2804

SCALE: SHEET OF SHEETS STA. TO STA.

VAR. RTE.	SECTION	COUNTY	TOTAL SHEETS	SHEET NO.
VAR.	2019-155-BR	VARIOUS	107	76

CONTRACT NO. 62K32

ILLINOIS FED. AID PROJECT

MODEL: Default
FILE NAME: pw:\\urbanroom.dot.illinois.gov:PWIDOT\Documents\IDOT Offices\District 1\Projects\D132320\CADData\Design\D132320-ersplt.dgn

FOR INFORMATION ONLY

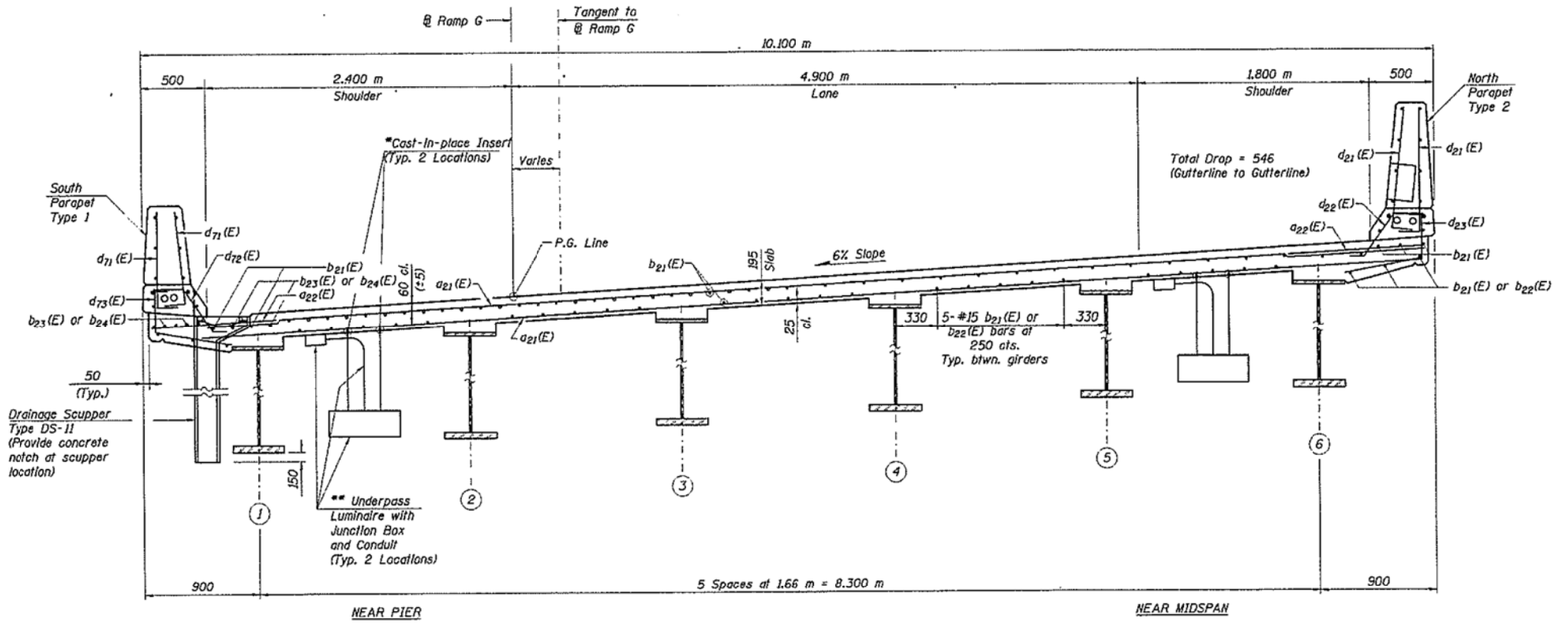

*See Electrical Drawings for location and type.
Paid under Electrical Contract but installed by Bridge Contractor.
Installation included for payment under Concrete Superstructure.
Bridge Contractor to coordinate with Electrical Contractor.

**Elements paid and installed under Electrical Contract.

CROSS SECTION F-F

Looking Up Station
All dimensions are measured radially

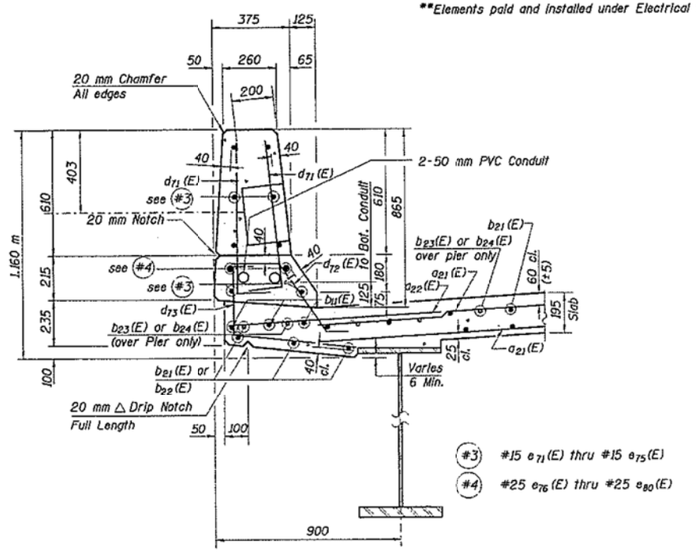

SECTION THRU SOUTH PARAPET TYPE 1

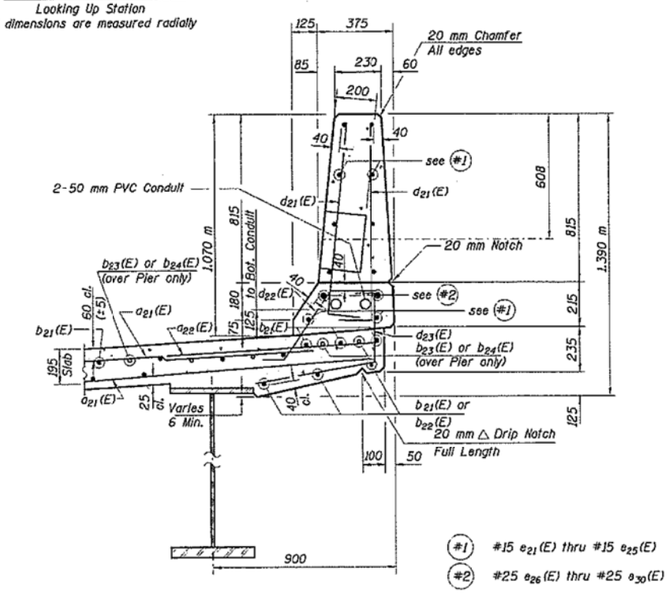

SECTION THRU NORTH PARAPET TYPE 2

Notes:

1. Work this Sheet with sheet Nos. 33-35 and 37-38.
2. See Sht. No. 41 of 91 for drainage scupper.
3. All dimensions are in millimeters (mm) except as noted.

USER NAME = diazia	DESIGNED -	REVISED -	STATE OF ILLINOIS DEPARTMENT OF TRANSPORTATION	EXISTING CROSS SECTION SN: 016-2804	VAR. RTE.	SECTION	COUNTY	TOTAL SHEETS	SHEET NO.
	DRAWN -	REVISED -			VAR.	2019-155-BR	VARIOUS	107	77
PLOT SCALE = 100.0000 ' / in.	CHECKED -	REVISED -					CONTRACT NO. 62K32		
PLOT DATE = 12/6/2019	DATE -	REVISED -		SCALE: SHEET OF SHEETS STA. TO STA.			ILLINOIS FED. AID PROJECT		

MODEL: Default
FILE NAME: pw:\\uhanroom.dot.illinois.gov:PWIDOT\Documents\IDOT Offices\District 1\Projects\D132320\CADData\Design\D132320-ecross1f.dgn

FOR INFORMATION ONLY

BENCH MARK: T.B.M. #217 Cut box on Northeast Corner of cement box trust foundation #B1 250m West of IL I-394 on I-80 Elev. = 190.636

EXISTING STRUCTURE: NONE

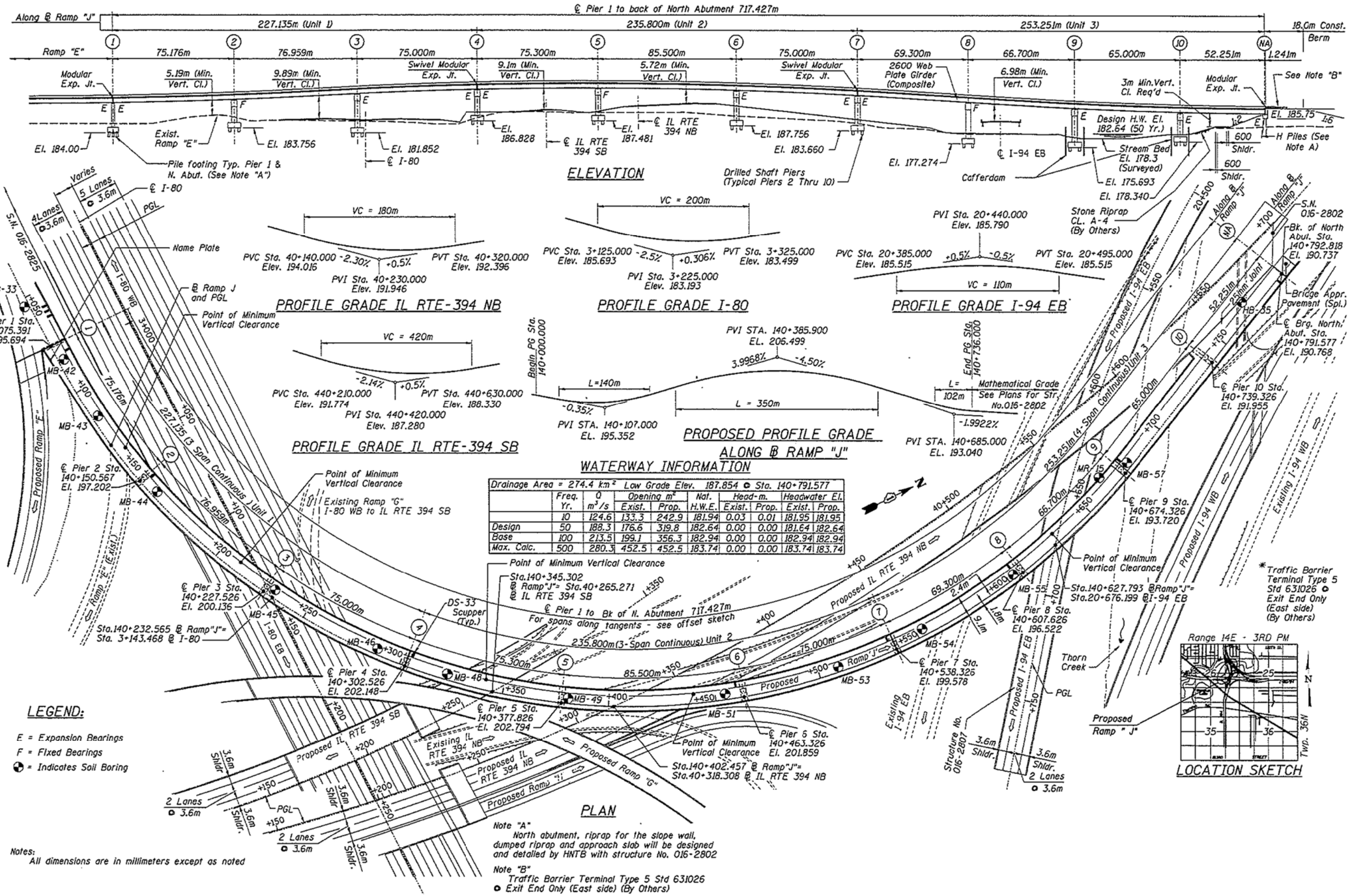

WATERWAY INFORMATION

Drainage Area = 274.4 km² Low Grade Elev. 187.854 @ Sta. 140+791.577

	Freq. Yr.	Q m³/s	Opening m² Exist.	Opening m² Prop.	Nat. H.W.E.	Head-m. Exist.	Head-m. Prop.	Headwater El. Exist.	Headwater El. Prop.
	10	124.6	133.3	242.9	181.94	0.03	0.01	181.95	181.95
Design	50	188.3	176.6	319.8	182.64	0.00	0.00	181.64	182.64
Base	100	213.5	199.1	356.3	182.94	0.00	0.00	182.94	182.94
Max. Calc.	500	280.3	452.5	452.5	183.74	0.00	0.00	183.74	183.74

LEGEND:

E = Expansion Bearings

F = Fixed Bearings

◆ = Indicates Soil Boring

Notes:
All dimensions are in millimeters except as noted

MODEL: Default
FILE NAME: pw:\\urbanroom.dot.illinois.gov:PWIDOT\Documents\IDOT Offices\District 1\Projects\D132320\CADData\Design\D132320-ex-gen-pln.dgn

USER NAME = diazia	DESIGNED -	REVISED -	
	DRAWN -	REVISED -	
PLOT SCALE = 100.0000 ' / in.	CHECKED -	REVISED -	
PLOT DATE = 12/6/2019	DATE -	REVISED -	

STATE OF ILLINOIS
DEPARTMENT OF TRANSPORTATION

EXISTING GENERAL PLAN
SN: 016-2805

SCALE: SHEET OF SHEETS STA. TO STA.

VAR. RTE.	SECTION	COUNTY	TOTAL SHEETS	SHEET NO.
VAR.	2019-155-BR	VARIOUS	107	78

CONTRACT NO. 62K32

ILLINOIS FED. AID PROJECT

FOR INFORMATION ONLY

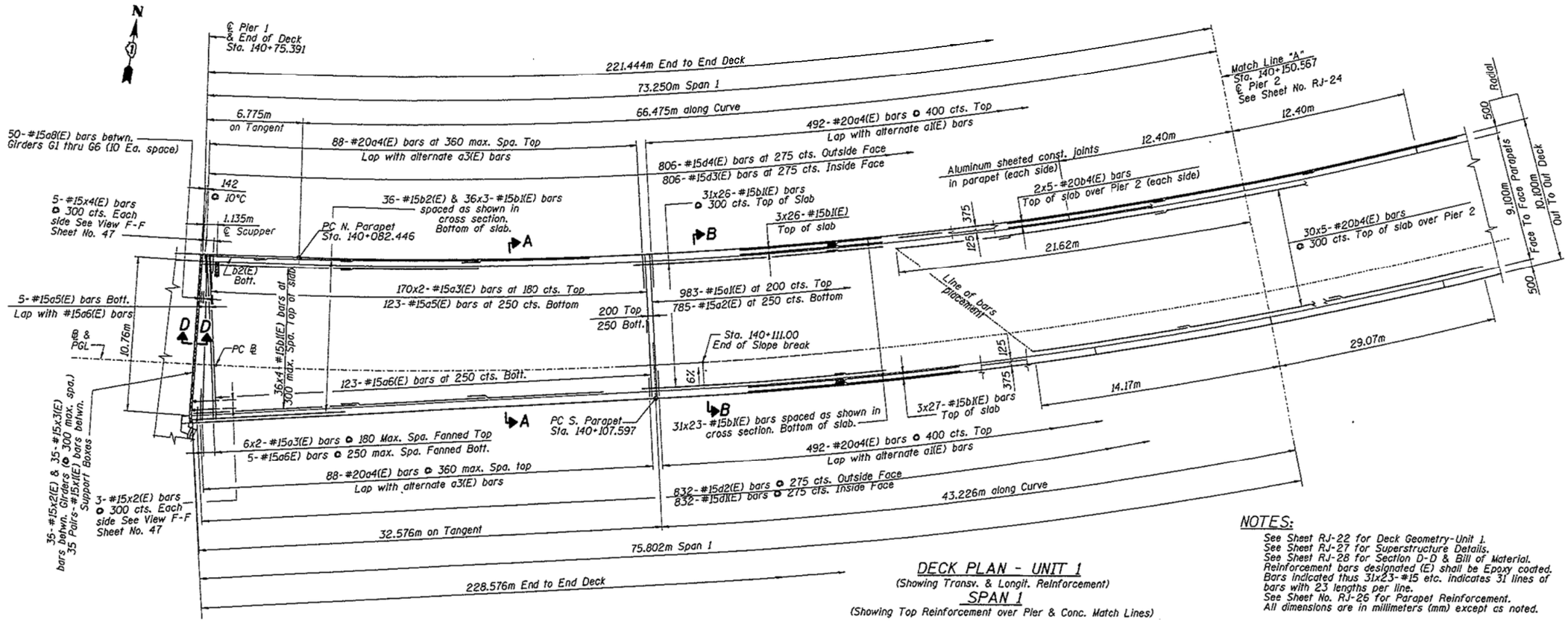

DECK PLAN - UNIT 1

(Showing Transv. & Longit. Reinforcement)

SPAN 1

(Showing Top Reinforcement over Pier & Conc. Match Lines)

NOTES:

See Sheet RJ-22 for Deck Geometry-Unit 1.
See Sheet RJ-27 for Superstructure Details.
See Sheet RJ-28 for Section D-D & Bill of Material.
Reinforcement bars designated (E) shall be Epoxy coated.
Bars indicated thus 31x23-#15 etc. indicates 31 lines of bars with 23 lengths per line.
See Sheet No. RJ-26 for Parapet Reinforcement.
All dimensions are in millimeters (mm) except as noted.

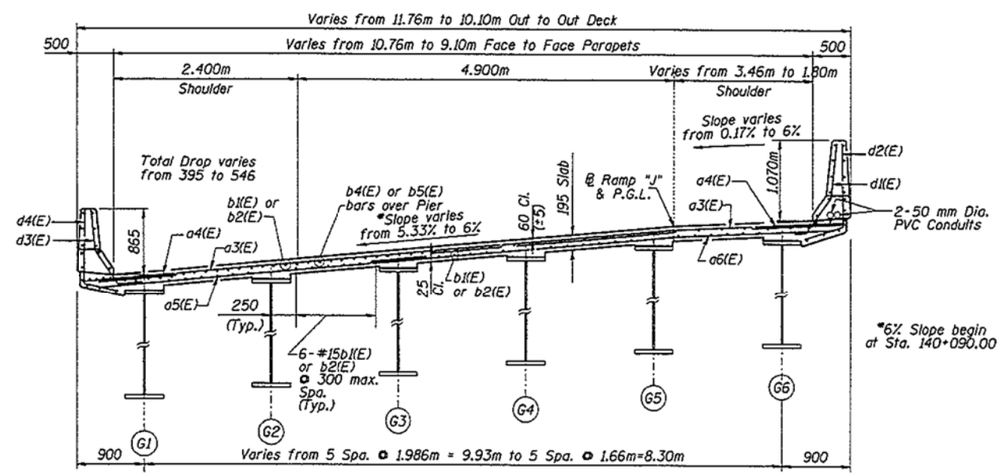

NEAR PIER

NEAR MIDSPAN

CROSS SECTION A-A

(Looking Upstation)

NOTES:

All Transverse Bars should be spaced at Rt. L's. along ℄ Girder G6.
All Longit. Dimensions are given along inside Face of Parapet.

*6% Slope begin at Sta. 140+090.00

SE TRANSITION

From 0.02m/m @ Sta. 140+00.00
to 0.06m/m @ Sta. 140+90.00
0.06m/m from Sta. 140+90.00
to Sta. 140+625

SHOULDER TRANSITION

From 0.0017m/m @ Sta. 140+53.925
to 0.06m/m @ Sta. 140+111.00

MODEL: Default
FILE NAME: pw:\\ubanroom.dot.illinois.gov:PWIDOT\Documents\IDOT Offices\District 1\Projects\D132320\CADData\Design\D132320-erepair.dgn

USER NAME = diazia	DESIGNED -	REVISED -	STATE OF ILLINOIS DEPARTMENT OF TRANSPORTATION	EXISTING DECK PLAN SN: 016-2805	VAR. RTE.	SECTION	COUNTY	TOTAL SHEETS	SHEET NO.
	DRAWN -	REVISED -			VAR.	2019-155-BR	VARIOUS	107	79
PLOT SCALE = 100.0000 ' / in.	CHECKED -	REVISED -					CONTRACT NO. 62K32		
PLOT DATE = 12/6/2019	DATE -	REVISED -		SCALE: SHEET OF SHEETS STA. TO STA.			ILLINOIS FED. AID PROJECT		

FOR INFORMATION ONLY

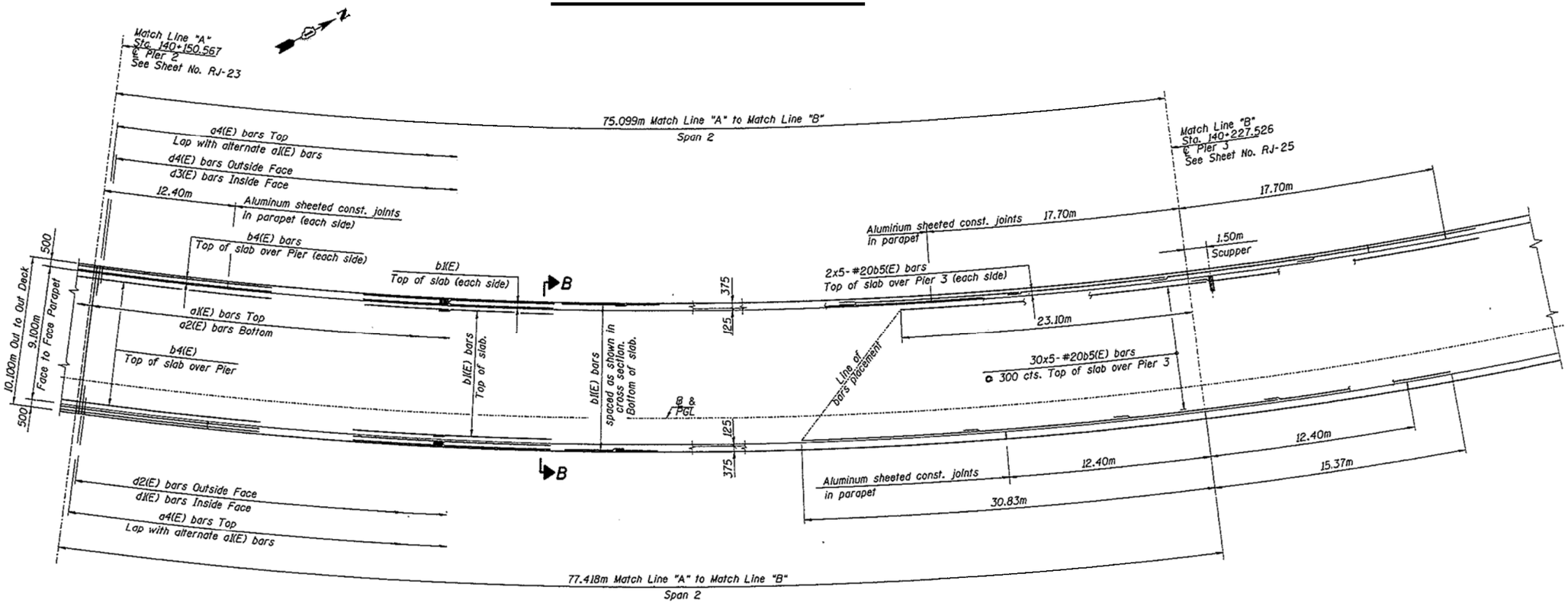

DECK PLAN - UNIT 1 - SPAN 2

(Showing Top Reinforcement over Pier 3 & Conc. Match Lines)

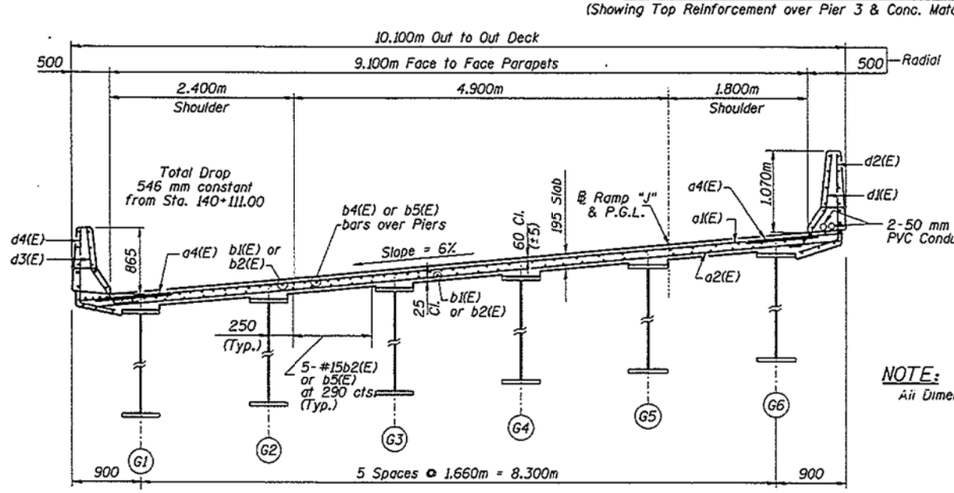

CROSS SECTION B-B

(Looking Upstation)

NOTE:

All Longit. Dimensions are given along inside Face of Parapet.

NOTES:

See Sheet RJ-27 for Superstructure Details.
See Sheet RJ-28 for Bill of Material.
Reinforcement bars designated (E) shall be Epoxy coated.
Bars indicated thus 30x5-#20 etc. indicates 30 lines of bars with 5 lengths per line.
See Sheet No. RJ-26 for Parapet Reinforcement.
All dimensions are in millimeters (mm) except as noted.

NOTE:

All Dimensions are radial.

MODEL: Default
FILE NAME: pw:\\ulanroom.dot.illinois.gov:PWIDOT\Documents\IDOT Offices\District 1\Projects\D132320\CADData\Design\D132320-ereplr.dgn

USER NAME = diazia	DESIGNED -	REVISED -	STATE OF ILLINOIS DEPARTMENT OF TRANSPORTATION	EXISTING DECK PLAN SN: 016-2805	VAR. RTE.	SECTION	COUNTY	TOTAL SHEETS	SHEET NO.
	DRAWN -	REVISED -			VAR.	2019-155-BR	VARIOUS	107	80
PLOT SCALE = 100.0000 ' / in.	CHECKED -	REVISED -					CONTRACT NO. 62K32		
PLOT DATE = 12/6/2019	DATE -	REVISED -		SCALE: SHEET OF SHEETS STA. TO STA.			ILLINOIS FED. AID PROJECT		

FOR INFORMATION ONLY

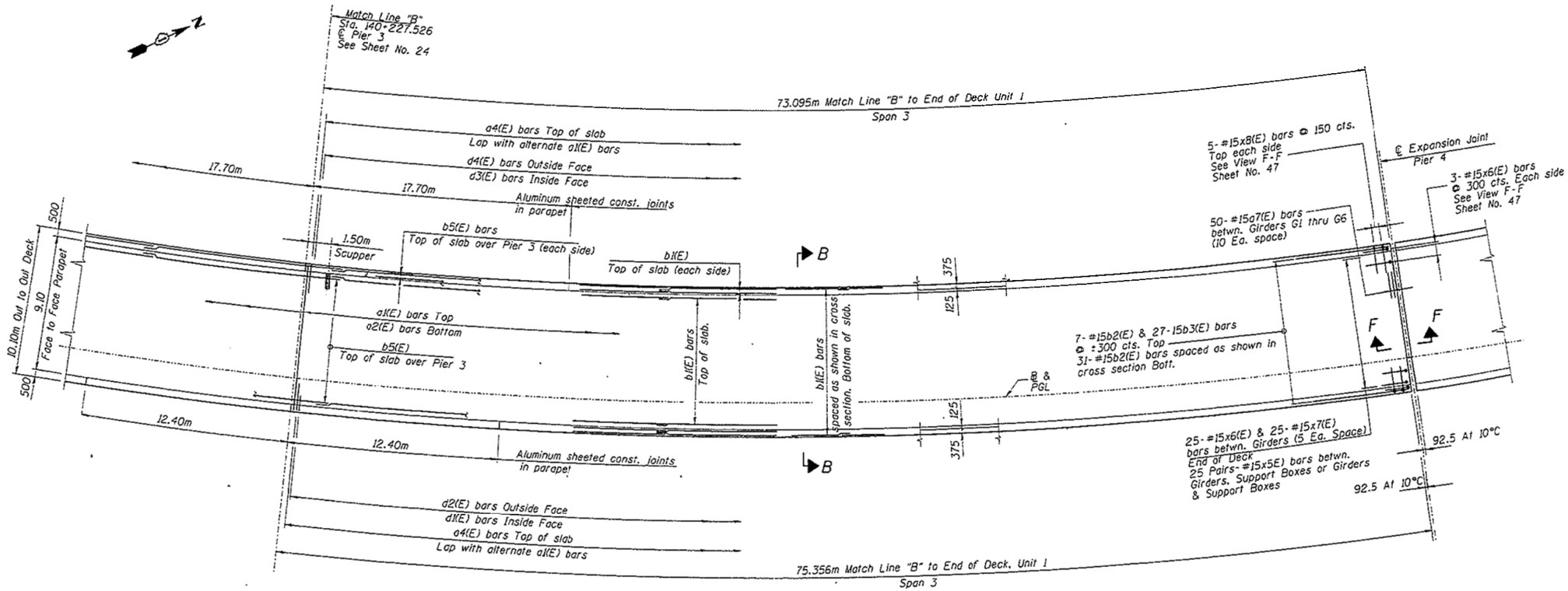

DECK PLAN - UNIT 1 - SPAN 3

(Showing Joint & Longit. Reinforcement & Conc. Match Lines)

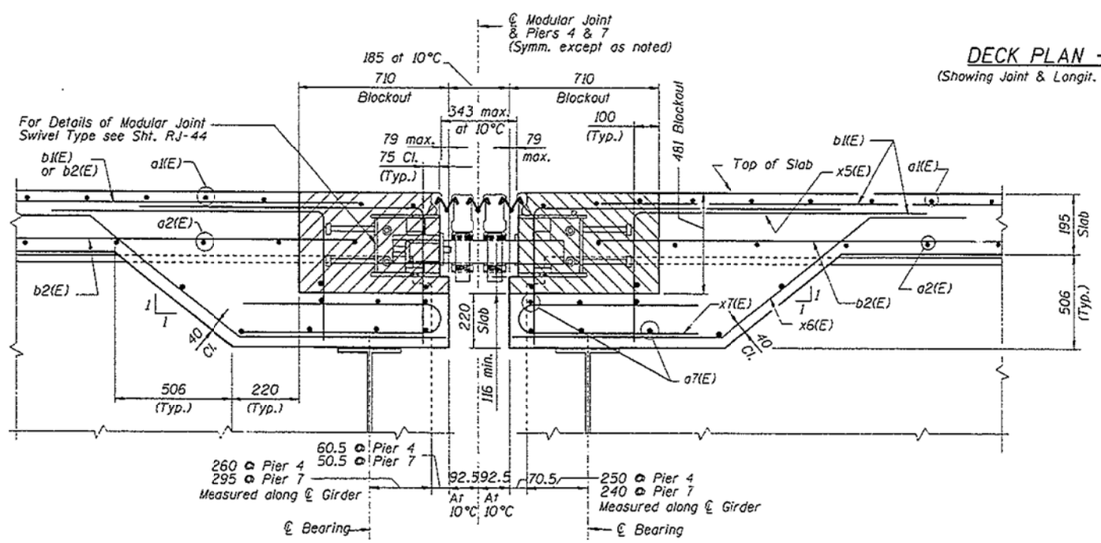

SECTION F-F

NOTE:

All Longit. Dimensions are given along inside Face of Parapet.

NOTES:

See Sheet RJ-27 for Superstructure Details.
See Sheet RJ-28 for Bill of Material.
Reinforcement bars designated (E) shall be Epoxy coated.
See Sheet No. RJ-26 for Parapet Reinforcement.
See Sheet No. RJ-24 for Section B-B.
All dimensions are in millimeters (mm) except as noted.

MODEL: Default
FILE NAME: pw:\\pbnaeom.dot.illinois.gov:PWIDOT\Documents\IDOT Offices\District 1\Projects\D132320\CADData\Design\D132320-eepair.dgn

USER NAME = diazia	DESIGNED -	REVISED -	
	DRAWN -	REVISED -	
PLOT SCALE = 100.0000 ' / in.	CHECKED -	REVISED -	
PLOT DATE = 12/6/2019	DATE -	REVISED -	

STATE OF ILLINOIS
DEPARTMENT OF TRANSPORTATION

EXISTING DECK PLAN
SN: 016-2805

SCALE: | SHEET OF SHEETS | STA. TO STA.

VAR. RTE.	SECTION	COUNTY	TOTAL SHEETS	SHEET NO.
VAR.	2019-155-BR	VARIOUS	107	81

CONTRACT NO. 62K32

ILLINOIS | FED. AID PROJECT

FOR INFORMATION ONLY

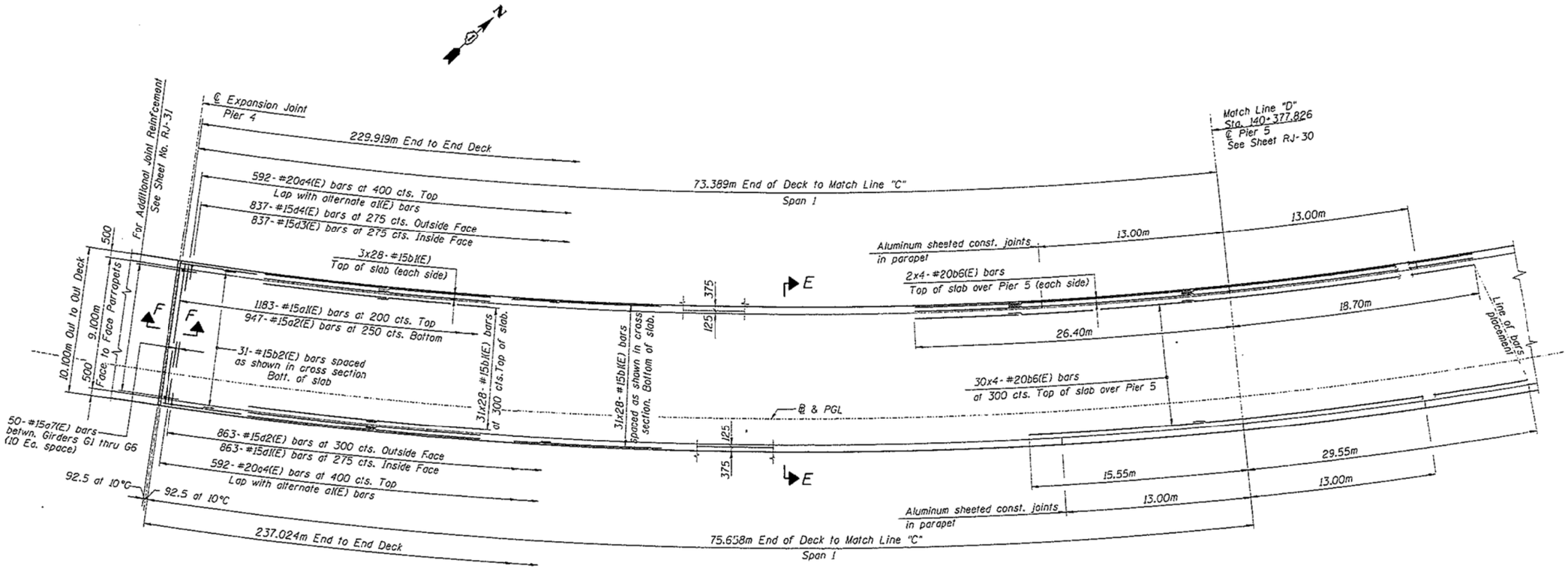

DECK PLAN - UNIT 2

(Showing Transv. & Longit. Reinforcement)

SPAN 1

(Showing Top Reinforcement over Pier 5)

NOTES:

All Transverse Bars should be spaced radially along ℄ Girder G6.
All Longit. Dimensions are given along inside Face of Parapet.

NOTES:

See Sheet RJ-33 for Superstructure Details.
See Sheet RJ-34 for Bill of Material.
Reinforcement bars designated (E) shall be Epoxy coated.
Bars indicated thus 31x28-#15 etc. indicates 31 lines of bars with 28 lengths per line.
See Sheet No. RJ-25 for Section F-F.
See Sheet No. RJ-32 for Parapet Reinforcement.
See Sheet No. 30 for Section E-E.
All dimensions are in millimeters (mm) except as noted.

MODEL: Default
FILE NAME: pw:\\urbanroom.dot.illinois.gov:PWIDOT\Documents\IDOT Offices\District 1\Projects\D132320\CADData\Design\D132320-erepair.dgn

USER NAME = diazia	DESIGNED -	REVISED -	STATE OF ILLINOIS DEPARTMENT OF TRANSPORTATION	EXISTING DECK PLAN SN: 016-2805	VAR. RTE.	SECTION	COUNTY	TOTAL SHEETS	SHEET NO.
	DRAWN -	REVISED -			VAR.	2019-155-BR	VARIOUS	107	82
PLOT SCALE = 100.0000 ' / in.	CHECKED -	REVISED -			CONTRACT NO. 62K32				
PLOT DATE = 12/6/2019	DATE -	REVISED -		SCALE: SHEET OF SHEETS STA. TO STA.	ILLINOIS	FED. AID PROJECT			

FOR INFORMATION ONLY

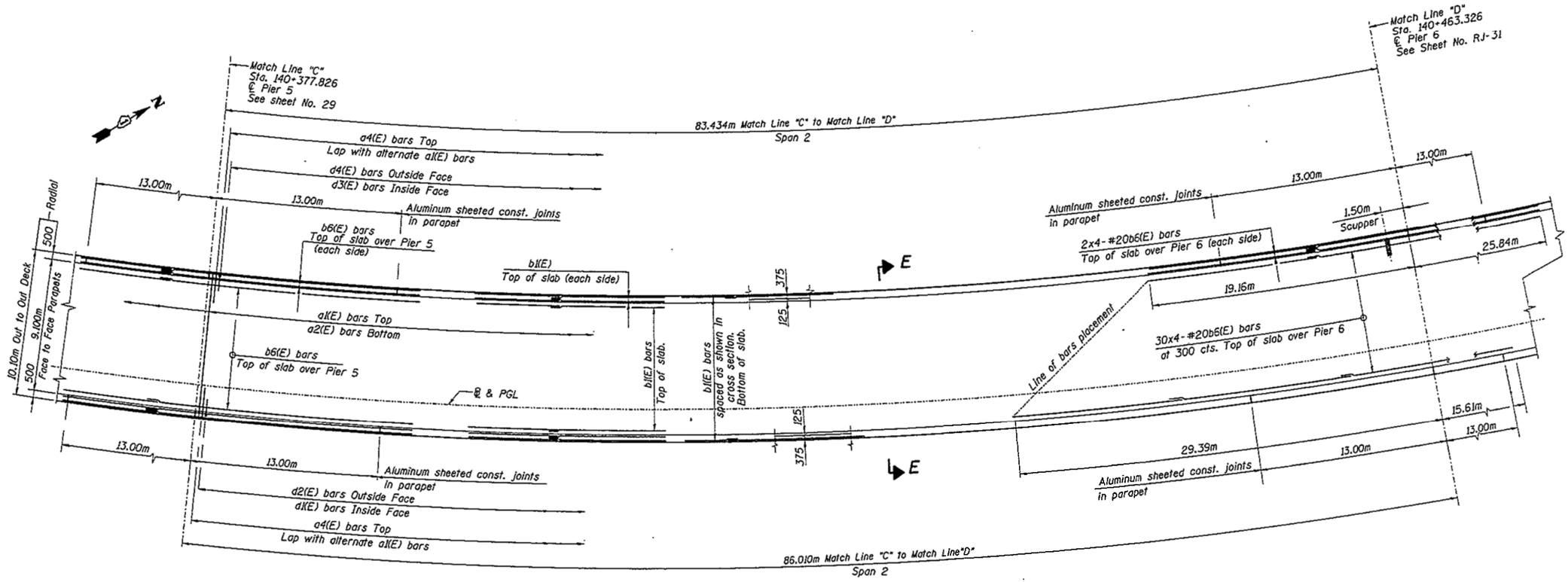

DECK PLAN - UNIT 2 - SPAN 2

(Showing Top Reinforcement over Pier 6 & Conc. Match Lines)

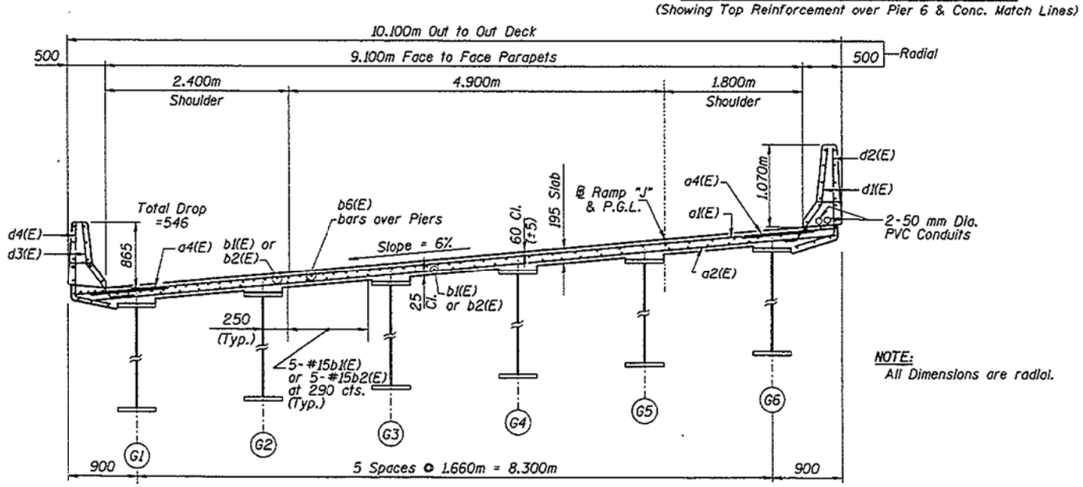

CROSS SECTION E-E

(Looking Upstation)

NOTE:
All Longit. Dimensions are given along inside Face of Parapet.

NOTES:
See Sheet RJ-33 for Superstructure Details.
See Sheet RJ-34 for Bill of Material.
Reinforcement bars designated (E) shall be Epoxy coated.
Bars indicated thus 30x4-#20 etc. indicates 30 lines of bars with 4 lengths per line.
See Sheet No. RJ-32 for Parapet Reinforcement.
All dimensions are in millimeters (mm) except as noted.

NOTE:
All Dimensions are radial.

MODEL: Default
FILE NAME: pw:\\bhnroom.dot.illinois.gov:PWIDOT\Documents\IDOT Offices\District 1\Projects\D132320\CADData\Design\D132320-ereport.dgn

USER NAME = diazia	DESIGNED -		REVISED -
	DRAWN -		REVISED -
PLOT SCALE = 100.0000 ' / in.	CHECKED -		REVISED -
PLOT DATE = 12/6/2019	DATE -		REVISED -

STATE OF ILLINOIS
DEPARTMENT OF TRANSPORTATION

EXISTING DECK PLAN
SN: 016-2805

SCALE: | SHEET OF SHEETS | STA. TO STA.

VAR. RTE.	SECTION	COUNTY	TOTAL SHEETS	SHEET NO.
VAR.	2019-155-BR	VARIOUS	107	83

CONTRACT NO. 62K32

ILLINOIS | FED. AID PROJECT

FOR INFORMATION ONLY

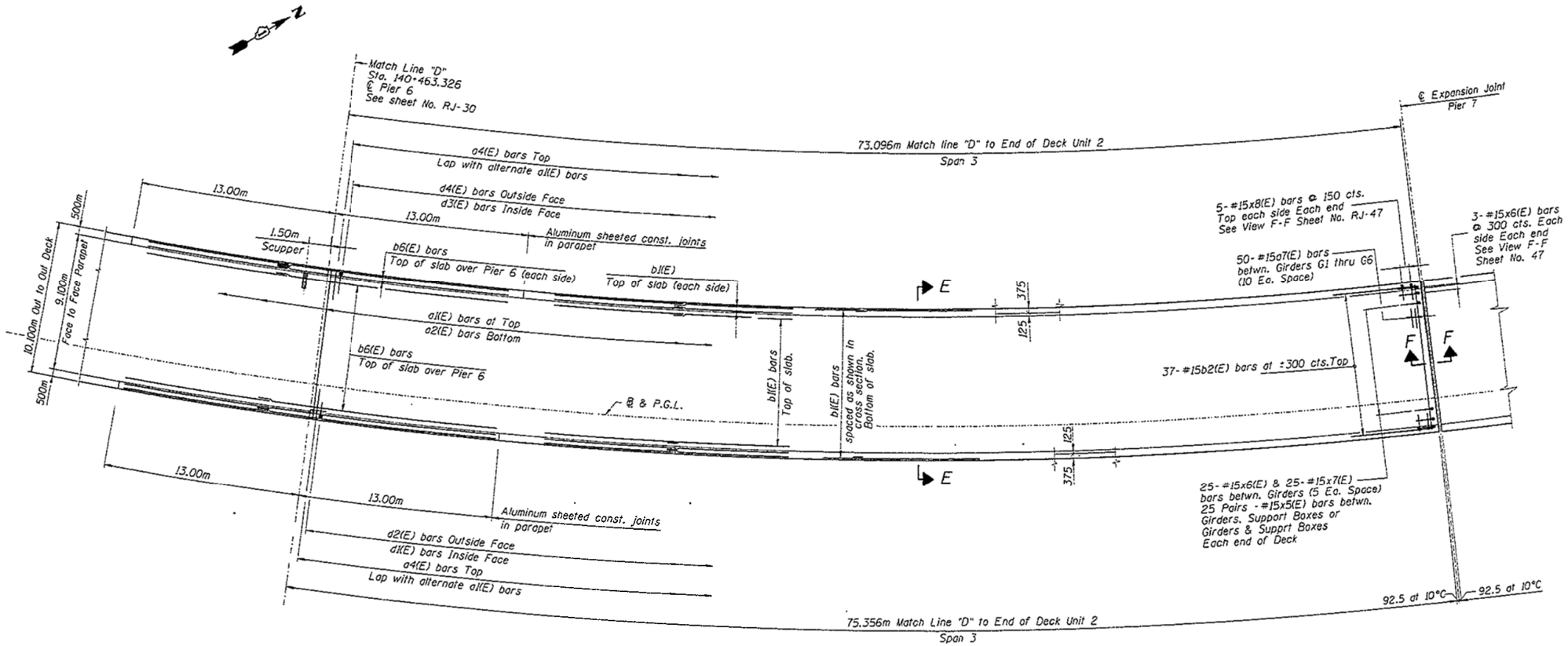

DECK PLAN - UNIT 2 - SPAN 3

(Showing Joint & Longit. Reinforcement & Conc. Match Lines)

NOTE:
All Longit. Dimensions are given along inside Face of Parapet.

All dimensions are in millimeters (mm) except as noted.

MODEL: Default
FILE NAME: pw:\\planroom.dot.illinois.gov:PWIDOT\Documents\IDOT Offices\District 1\Projects\D132320\CADData\Design\D132320-ersplr.dgn

USER NAME = diazia	DESIGNED -	REVISED -	
	DRAWN -	REVISED -	
PLOT SCALE = 100.0000 ' / in.	CHECKED -	REVISED -	
PLOT DATE = 12/6/2019	DATE -	REVISED -	

STATE OF ILLINOIS
DEPARTMENT OF TRANSPORTATION

EXISTING DECK PLAN
SN: 016-2805

SCALE: | SHEET OF SHEETS | STA. TO STA.

VAR. RTE.	SECTION	COUNTY	TOTAL SHEETS	SHEET NO.
VAR.	2019-155-BR	VARIOUS	107	84

CONTRACT NO. 62K32

ILLINOIS | FED. AID PROJECT

FOR INFORMATION ONLY

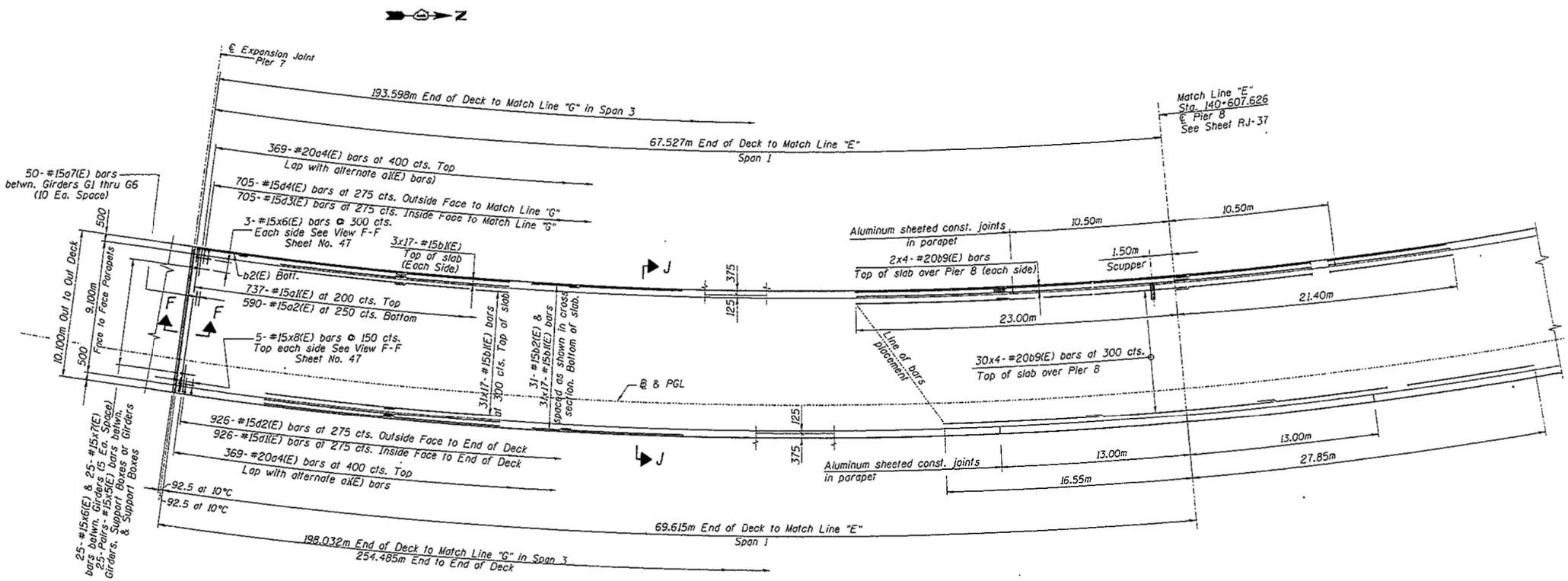

DECK PLAN - UNIT 3

(Showing Trans. & Longit. Reinforcement
to PT @ Sta. 140+685.231 except as noted)

SPAN 1

(Showing Top Reinforcement over Pier 8))

NOTES:

All Transverse Bars should be spaced radially along ℄ Girder G6.
All Longit. Dimensions are given along inside Face of Parapet.

All dimensions are in millimeters (mm) except as noted.

MODEL: Default
FILE NAME: pw:\\ildanrdm.dot.illinois.gov:PWIDOT\Documents\IDOT Offices\District 1\Projects\D132320\CADData\Design\D132320-ereslr.dgn

USER NAME = diazia	DESIGNED -	REVISED -	STATE OF ILLINOIS DEPARTMENT OF TRANSPORTATION	EXISTING DECK PLAN SN: 016-2805	VAR. RTE.	SECTION	COUNTY	TOTAL SHEETS	SHEET NO.
	DRAWN -	REVISED -			VAR.	2019-155-BR	VARIOUS	107	85
PLOT SCALE = 100.0000 ' / in.	CHECKED -	REVISED -					CONTRACT NO. 62K32		
PLOT DATE = 12/6/2019	DATE -	REVISED -		SCALE: SHEET OF SHEETS STA. TO STA.		ILLINOIS	FED. AID PROJECT		

FOR INFORMATION ONLY

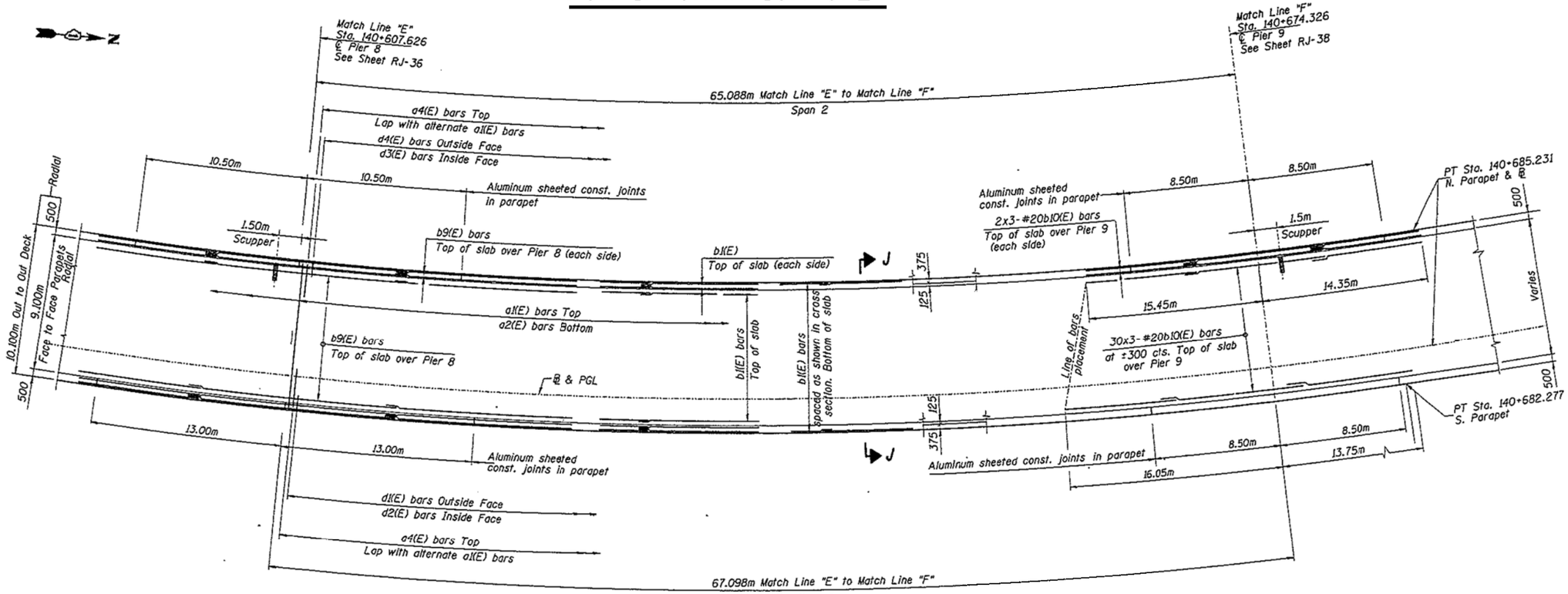

DECK PLAN - UNIT 3 - SPAN 2

(Showing Top Reinforcement over Pier 9 & Conc. Match Lines)

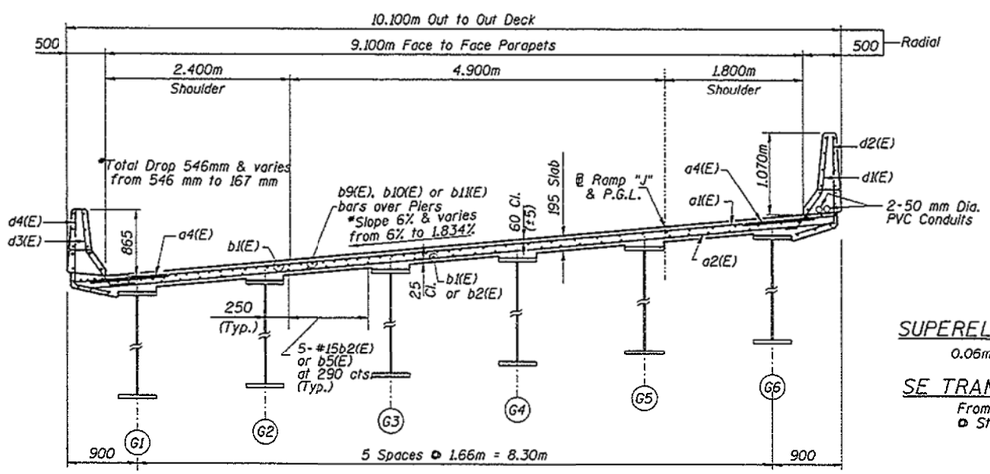

NEAR PIER

NEAR MIDSPAN

CROSS SECTION J-J

(From Sta. 140+538.326 to Sta. 140+682.277)
(Looking Upstation)

NOTE:

All Dimensions are radial.

SUPERELEVATON

0.06m/m @ Sta. 140+090.00 to Sta. 140+625.00

SE TRANSITION

From 0.06m/m @ Sta. 140+625.00 to 0.00m/m @ Sta. 140+707.50

NOTES:

All Transverse Bars should be spaced radially along ℄ Girder G6.
All Longit. Dimensions are given along inside Face of Parapet.

NOTES:

See Sheet RJ-41 for Superstructure Details.
See Sheet RJ-42 for Bill of Material.
Reinforcement bars designated (E) shall be Epoxy coated.
Bars indicated thus 30x3-#20 etc. Indicates 30 lines of bars with 3 lengths per line.
See Sheet No. RJ-40 for Parapet Reinforcement.
All dimensions are in millimeters (mm) except as noted.

MODEL: Default
FILE NAME: pw:\\ubancoom.dot.illinois.gov:PWIDOT\Documents\IDOT Offices\District 1\Projects\D132320\CADData\Design\D132320-repair.dgn

USER NAME = diazia	DESIGNED -	REVISED -	
	DRAWN -	REVISED -	
PLOT SCALE = 100.0000 ' / in.	CHECKED -	REVISED -	
PLOT DATE = 12/6/2019	DATE -	REVISED -	

STATE OF ILLINOIS
DEPARTMENT OF TRANSPORTATION

EXISTING DECK PLAN
SN: 016-2805

SCALE: | SHEET OF SHEETS | STA. TO STA.

VAR. RTE.	SECTION	COUNTY	TOTAL SHEETS	SHEET NO.
VAR.	2019-155-BR	VARIOUS	107	86
		CONTRACT NO. 62K32		
	ILLINOIS	FED. AID PROJECT		

FOR INFORMATION ONLY

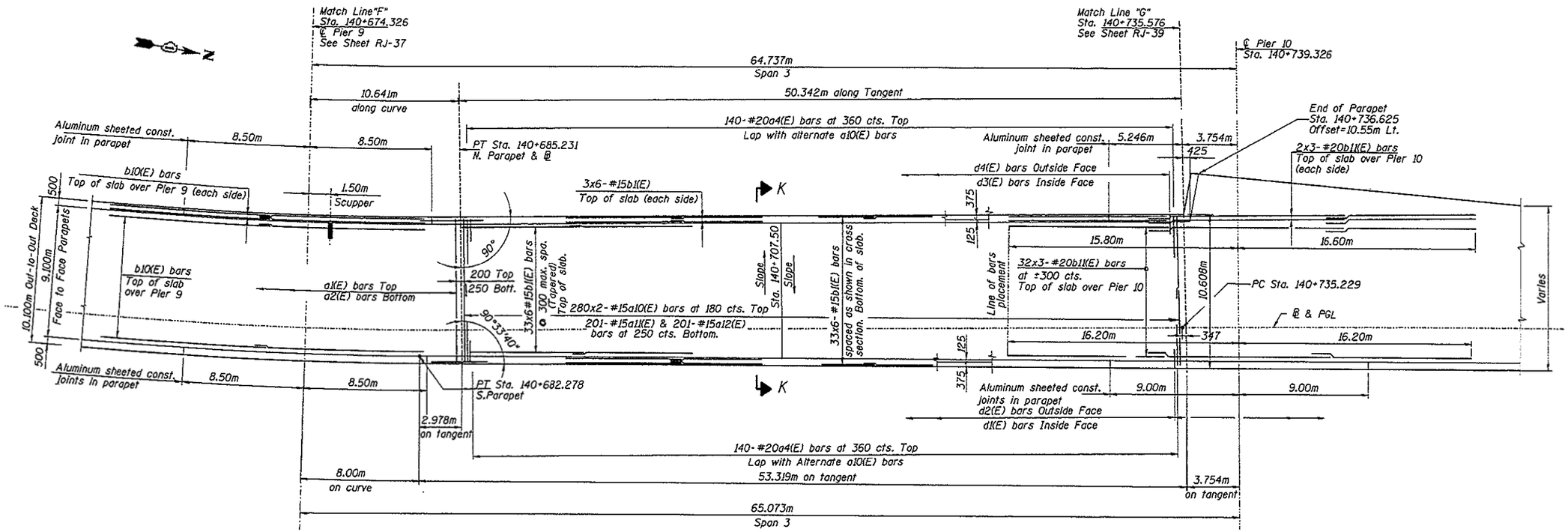

DECK PLAN - UNIT 3 - SPAN 3

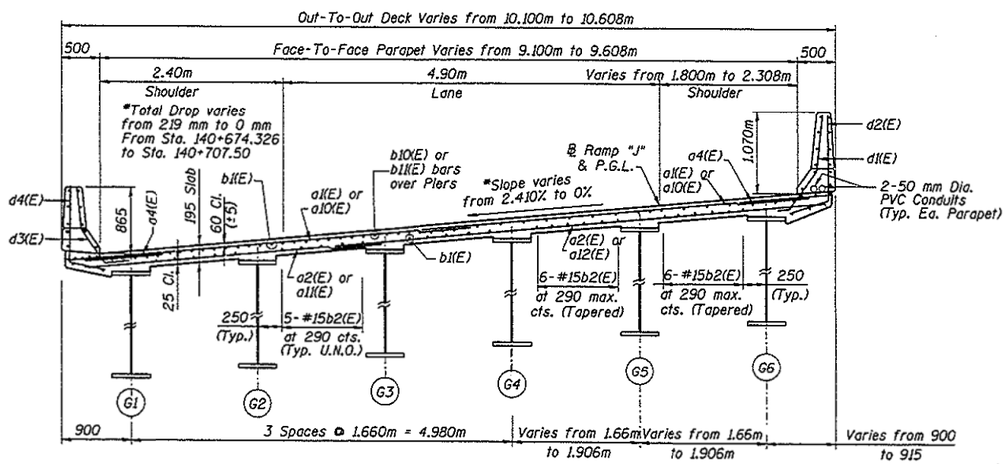

NEAR PIER

CROSS SECTION K-K

From Sta. 140+674.326 To Sta. 140+735.576
(Looking Upstation)

NEAR MIDSPAN

* Total drop varies from 0 mm to 192 mm & slope varies from 0% to 2% right @ Sta. 140+707.50 to Sta. 140+735.00 Constant slope 2% from Sta. 140+735.00 to Sta. 140+735.576

NOTES:

All Transverse Bars should be spaced @ Rt. L's. along ℄ Girder G6.
All Longit. Dimensions are given along inside Face of Parapet.

NOTES:

See Sheet for RJ-35 for Deck Geometry-Unit 3.
See Sheet RJ-41 for Superstructure Details.
See Sheet RJ-42 for Bill of Material.
Reinforcement bars designated (E) shall be Epoxy coated.
Bars indicated thus 32x3-#20 etc. indicates 32 lines of bars with 3 lengths per line.
See Sheet No. RJ-40 for Parapet Reinforcement.
All dimensions are in millimeters (mm) except as noted.

MODEL: Default
FILE NAME: pw:\\pbnaeom.dot.illinois.gov:PWIDOT\Documents\IDOT Offices\District 1\Projects\D132320\CADData\Design\D132320-repair.dgn

USER NAME = diazia	DESIGNED -	REVISED -	
	DRAWN -	REVISED -	
PLOT SCALE = 100.0000 ' / in.	CHECKED -	REVISED -	
PLOT DATE = 12/6/2019	DATE -	REVISED -	

STATE OF ILLINOIS
DEPARTMENT OF TRANSPORTATION

EXISTING DECK PLAN
SN: 016-2805

SCALE: | SHEET OF SHEETS | STA. TO STA.

VAR. RTE.	SECTION	COUNTY	TOTAL SHEETS	SHEET NO.
VAR.	2019-155-BR	VARIOUS	107	87

CONTRACT NO. 62K32

ILLINOIS FED. AID PROJECT

FOR INFORMATION ONLY

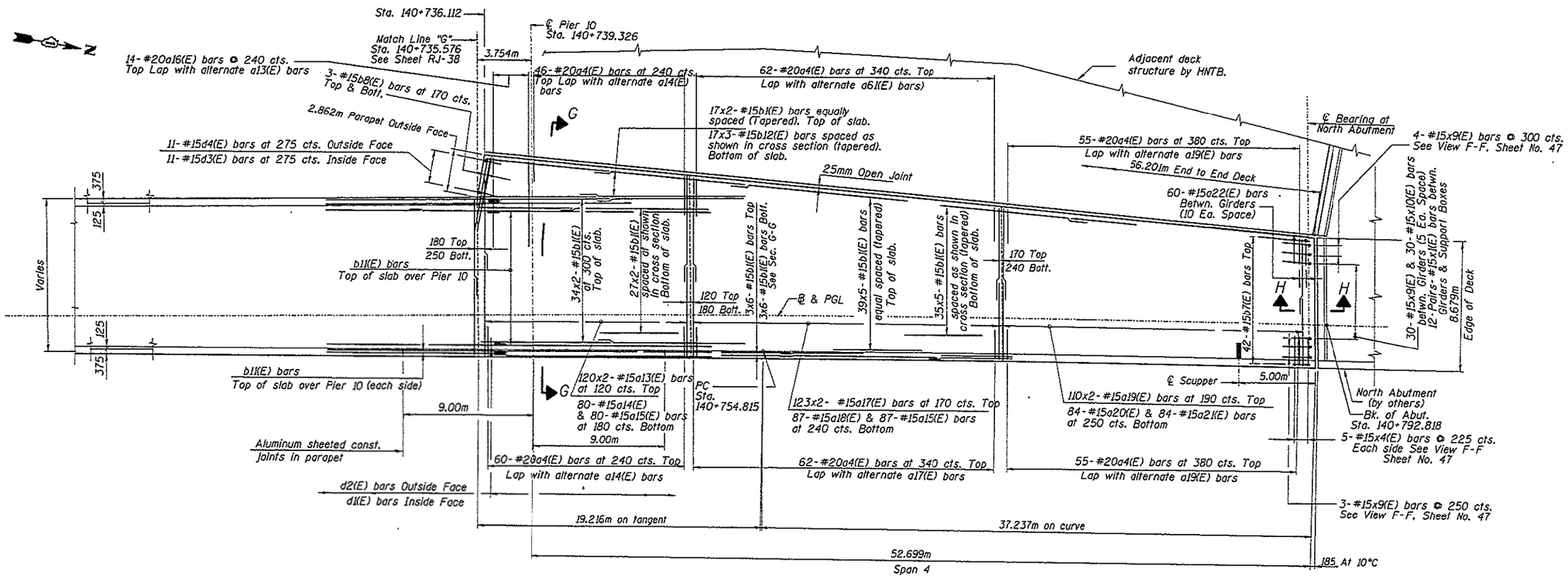

DECK PLAN - UNIT 3 - SPAN 4

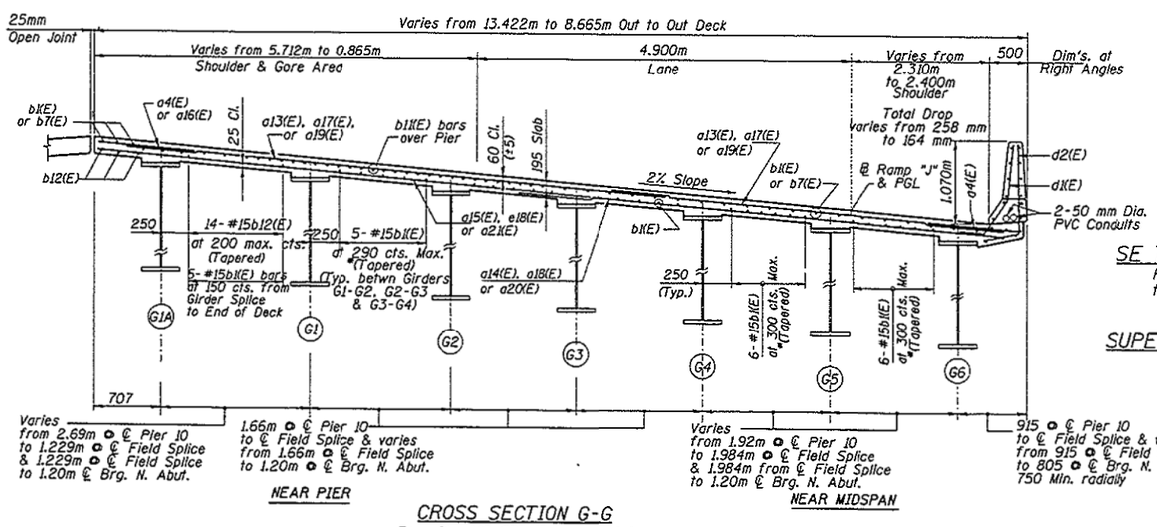

CROSS SECTION G-G

From Sta. 140+736.112 to End of Deck
(Looking Upstation)

*Bars uniformly tapered from ℄ Girder splice to End of Deck.

SE TRANSITION

From 0.00m/m @ Sta. 140+707.50
to 0.02m/m @ Sta. 140+735.00

SUPERELEVATION

0.02m/m @ Sta. 735.00
to Sta. 140+792.818

NOTES:

All Transverse Bars should be spaced @ Rt. L's. along ℄ Girder G6.
All Longit. Dimensions are given along inside Face of Parapet except as noted.

NOTES:

See Sheet for RJ-35 for Deck Geometry-Unit 3.
See Sheet RJ-41 for Superstructure Details.
See Sheet RJ-42 for Sec. H-H & Bill of Material.
Reinforcement bars designated (E) shall be Epoxy coated.
Bars indicated thus 39x4-#15 etc. indicates 39 lines of bars with 4 lengths per line.
See Sheet No. RJ-40 for Parapet Reinforcement.
All dimensions are in millimeters (mm) except as noted.

MODEL: Default
FILE NAME: pw:\\ahnroom.dot.illinois.gov:PWIDOT\Documents\IDOT Offices\District 1\Projects\D132320\CADData\Design\D132320-ersslr.dgn

USER NAME = diazia	DESIGNED -	REVISED -	
	DRAWN -	REVISED -	
PLOT SCALE = 100.0000 ' / in.	CHECKED -	REVISED -	
PLOT DATE = 12/6/2019	DATE -	REVISED -	

STATE OF ILLINOIS
DEPARTMENT OF TRANSPORTATION

EXISTING DECK PLAN
SN: 016-2805

SCALE: | SHEET OF SHEETS | STA. | TO STA.

VAR. RTE.	SECTION	COUNTY	TOTAL SHEETS	SHEET NO.
VAR.	2019-155-BR	VARIOUS	107	88
		CONTRACT NO. 62K32		
		ILLINOIS FED. AID PROJECT		

FOR INFORMATION ONLY

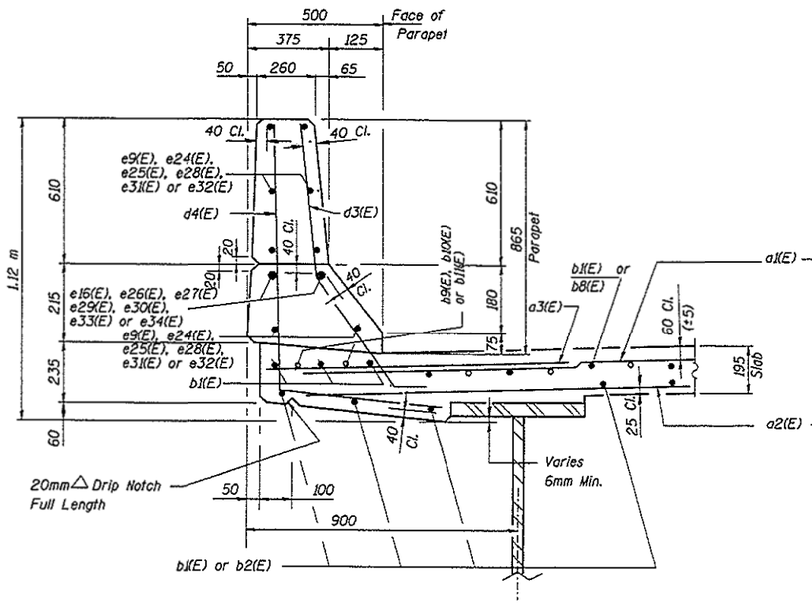

SECTION THRU NORTH PARAPET

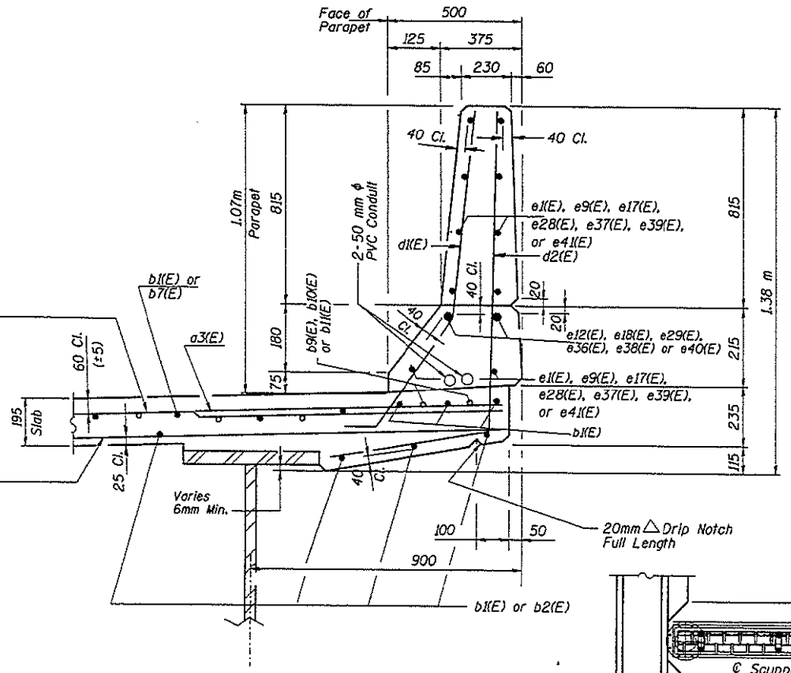

SECTION THRU SOUTH PARAPET

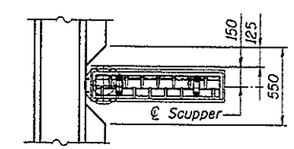

VIEW J-J

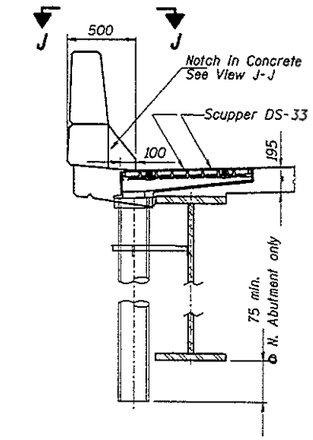

SECTION G-G

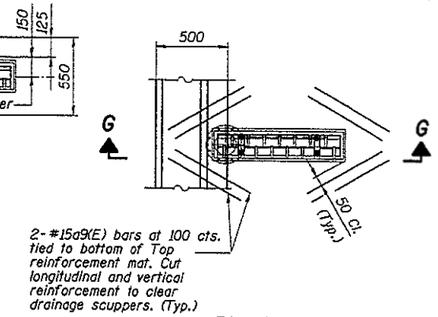

PLAN
(Showing Reinforcement)
DRAINAGE SCUPPER DETAILS

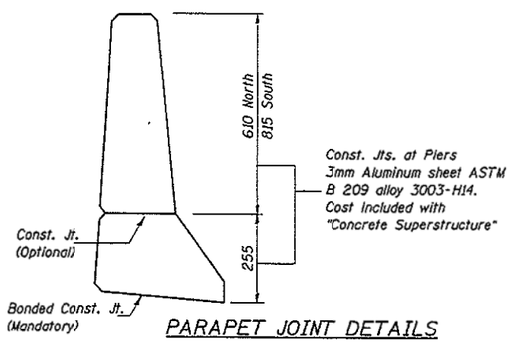

PARAPET JOINT DETAILS

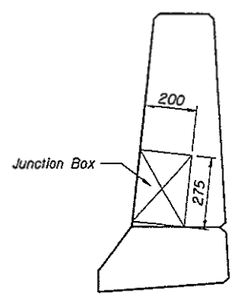

PARAPET DETAILS AT JUNCTION BOX

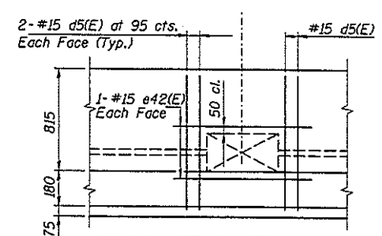

DETAIL AT JUNCTION BOX
(4 Required)

Notes: See Roadway Lighting Plans, Plans for Details of the embedded conduit and junction boxes.
Space horizontal e bars to miss Junction Box.
Cut vertical d bars as required to clear Junction Box.
Junction Box

NOTES:

See Sheet No. RJ-42 for Superstructure Bill of Material.
Reinforcement bars designated (E) shall be Epoxy Coated
See Sheet No. RJ-40 for Parapet Reinforcement.
All dimensions are in millimeters (mm) except as noted.
Cut longitudinal reinforcement in order to clear drainage scupper.
See Sheets No. RJ-36 thru RJ-39 for location of Drainage Scupper.
See Sheet No. RJ-48 for Drainage Scupper details.

MODEL: Default
FILE NAME: pw:\\dalnxcom.dot.illinois.gov:PWIDOT\Documents\IDOT Offices\District 1\Projects\D132320\CADData\Design\D132320-exrepair.dgn

USER NAME = diazia	DESIGNED -	REVISED -	
	DRAWN -	REVISED -	
PLOT SCALE = 100.0000 ' / in.	CHECKED -	REVISED -	
PLOT DATE = 12/6/2019	DATE -	REVISED -	

STATE OF ILLINOIS
DEPARTMENT OF TRANSPORTATION

EXISTING DECK PLAN
SN: 016-2805

SCALE: | SHEET OF SHEETS | STA. TO STA.

VAR. RTE.	SECTION	COUNTY	TOTAL SHEETS	SHEET NO.
VAR.	2019-155-BR	VARIOUS	107	89
		CONTRACT NO. 62K32		
	ILLINOIS	FED. AID PROJECT		

FOR INFORMATION ONLY

BENCH MARKS:

TBM #49–CHISELED SQUARE "□" E. LEG OF SIGN @ W. SIDE OFF RAMP I–55 SOUTH. O–S RAMP STA. 39+51±, 14'± LT. ELEV. 757.06

TBM #50–N.E. CORNER OF ELECT. VAULT W. SIDE OF OFF RAMP TO I–55 SOUTH. O–S RAMP STA. 25+94±, 173'+_RT. ELEV. 764.82

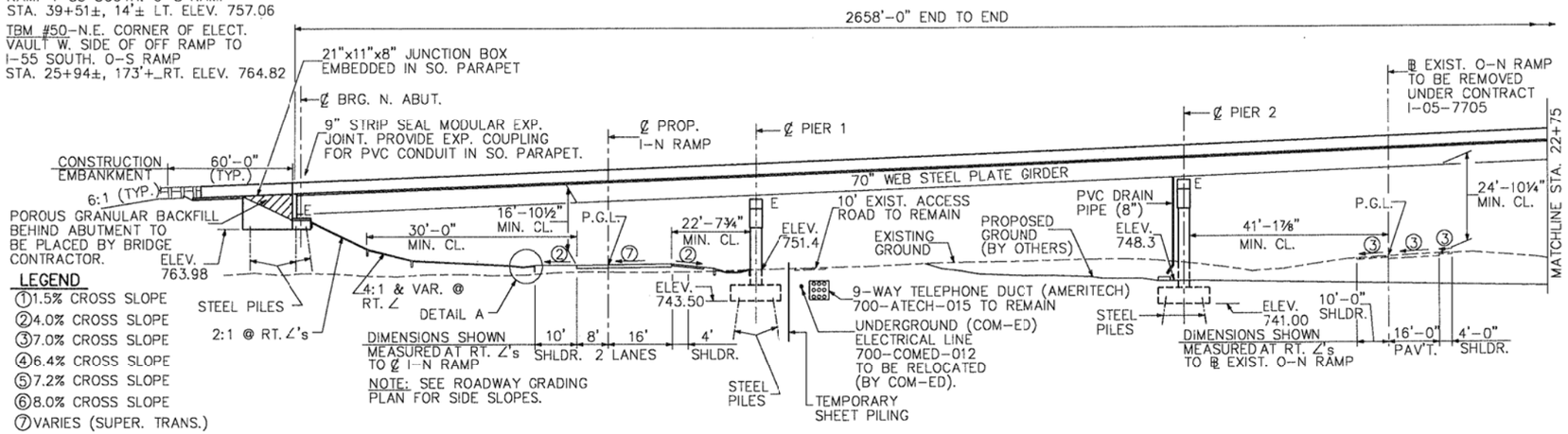

NOTE: SEE ROADWAY GRADING PLAN FOR SIDE SLOPES.

LEGEND

1. 1.5% CROSS SLOPE
2. 4.0% CROSS SLOPE
3. 7.0% CROSS SLOPE
4. 6.4% CROSS SLOPE
5. 7.2% CROSS SLOPE
6. 8.0% CROSS SLOPE
7. VARIES (SUPER. TRANS.)

SOIL BORING LOCATION

ELEVATION

SCALE 1"=20' HORIZ.
1"=20' VERT.

20' 0 20' 40'
SCALE: 1" = 20'

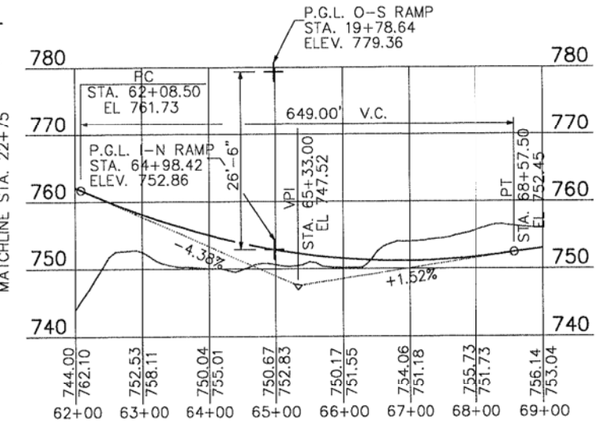

I–N RAMP PROFILE

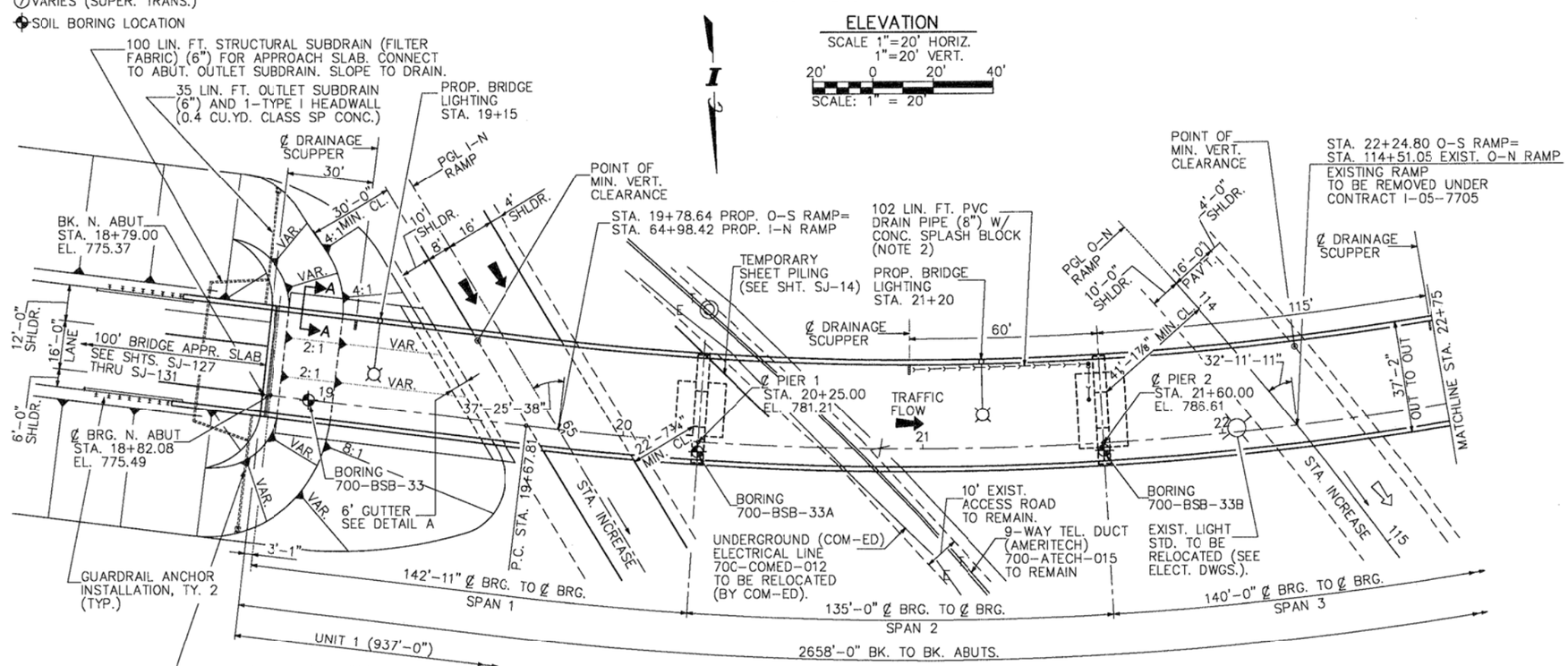

PLAN

SCALE 1"=20'

NOTE:
INSTALL 3'–1"x7½" DRAINAGE SCUPPERS AT LOCATIONS SHOWN.

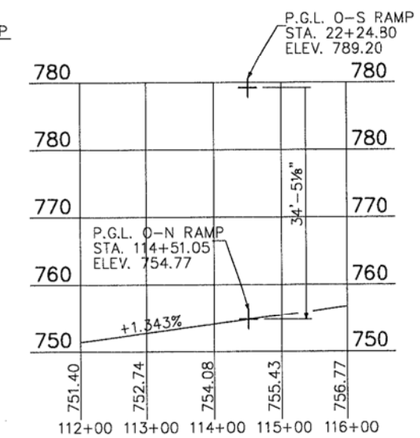

O–N RAMP PROFILE (EXISTING)

MODEL: Default
FILE NAME: pw:\\dhanroom.dot.illinois.gov:PWIDOT\Documents\IDOT Offices\District 1\Projects\D132320\CADData\Design\D132320-exgpln.dgn

USER NAME = diazia	DESIGNED -	REVISED -	STATE OF ILLINOIS DEPARTMENT OF TRANSPORTATION
	DRAWN -	REVISED -	
PLOT SCALE = 100.0000 ' / in.	CHECKED -	REVISED -	
PLOT DATE = 12/6/2019	DATE -	REVISED -	

EXISTING GENERAL PLAN
SN: 099–3013

SCALE: SHEET OF SHEETS STA. TO STA.

VAR. RTE.	SECTION	COUNTY	TOTAL SHEETS	SHEET NO.
VAR.	2019-155-BR	VARIOUS	107	90

CONTRACT NO. 62K32

ILLINOIS FED. AID PROJECT

FOR INFORMATION ONLY

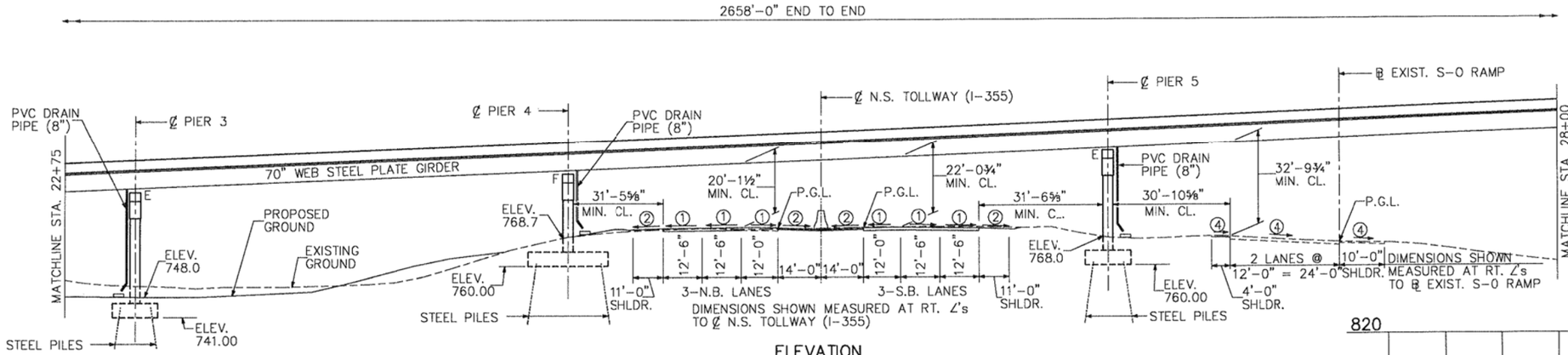

ELEVATION

SCALE 1"=20' HORIZ.
1"=20' VERT.

20' 0 20' 40'
SCALE: 1" = 20'

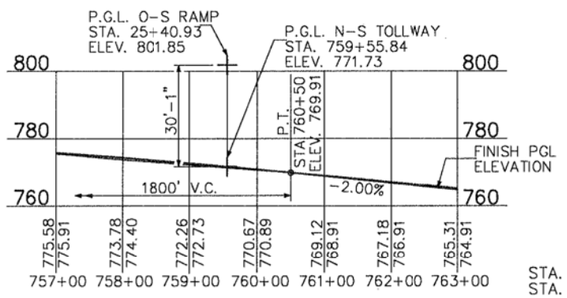

N-S TOLLWAY PROFILE

LEGEND

1. 1.5% CROSS SLOPE
2. 4.0% CROSS SLOPE
3. 7.0% CROSS SLOPE
4. 6.4% CROSS SLOPE
5. 7.2% CROSS SLOPE
6. 8.0% CROSS SLOPE

SOIL BORING LOCATION

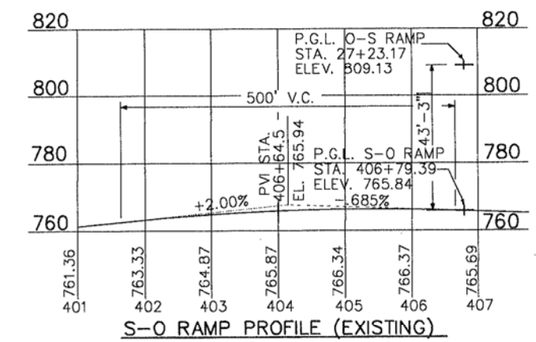

S-O RAMP PROFILE (EXISTING)

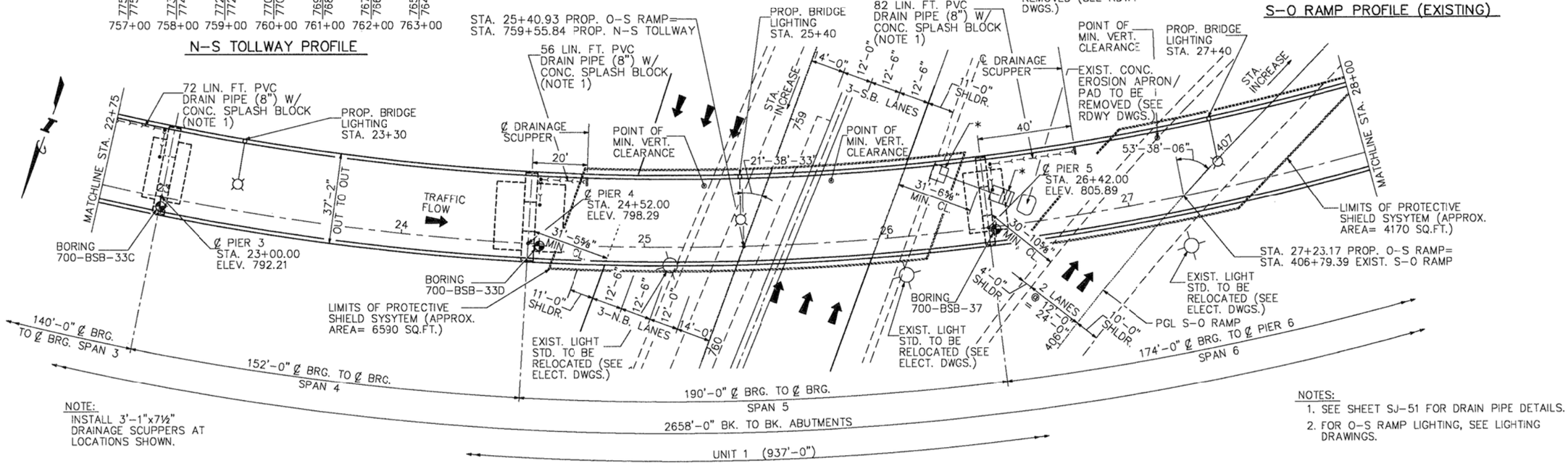

NOTE:
INSTALL 3'-1"x7½" DRAINAGE SCUPPERS AT LOCATIONS SHOWN.

NOTES:
1. SEE SHEET SJ-51 FOR DRAIN PIPE DETAILS.
2. FOR O-S RAMP LIGHTING, SEE LIGHTING DRAWINGS.

PLAN

SCALE 1"=20'

USER NAME = diazia	DESIGNED -	REVISED -	STATE OF ILLINOIS DEPARTMENT OF TRANSPORTATION	EXISTING GENERAL PLAN SN: 099-3013	VAR. RTE.	SECTION	COUNTY	TOTAL SHEETS / SHEET NO.
	DRAWN -	REVISED -			VAR.	2019-155-BR	VARIOUS	107 / 91
PLOT SCALE = 100.0000 ' / in.	CHECKED -	REVISED -					CONTRACT NO. 62K32	
PLOT DATE = 12/6/2019	DATE -	REVISED -		SCALE: SHEET OF SHEETS STA. TO STA.			ILLINOIS FED. AID PROJECT	

MODEL: Default
FILE NAME: pw:\\ildarroom.dot.illinois.gov:PWIDOT\Documents\IDOT Offices\District 1\Projects\D132320\CADData\Design\D132320-ergsalt.dgn

FOR INFORMATION ONLY

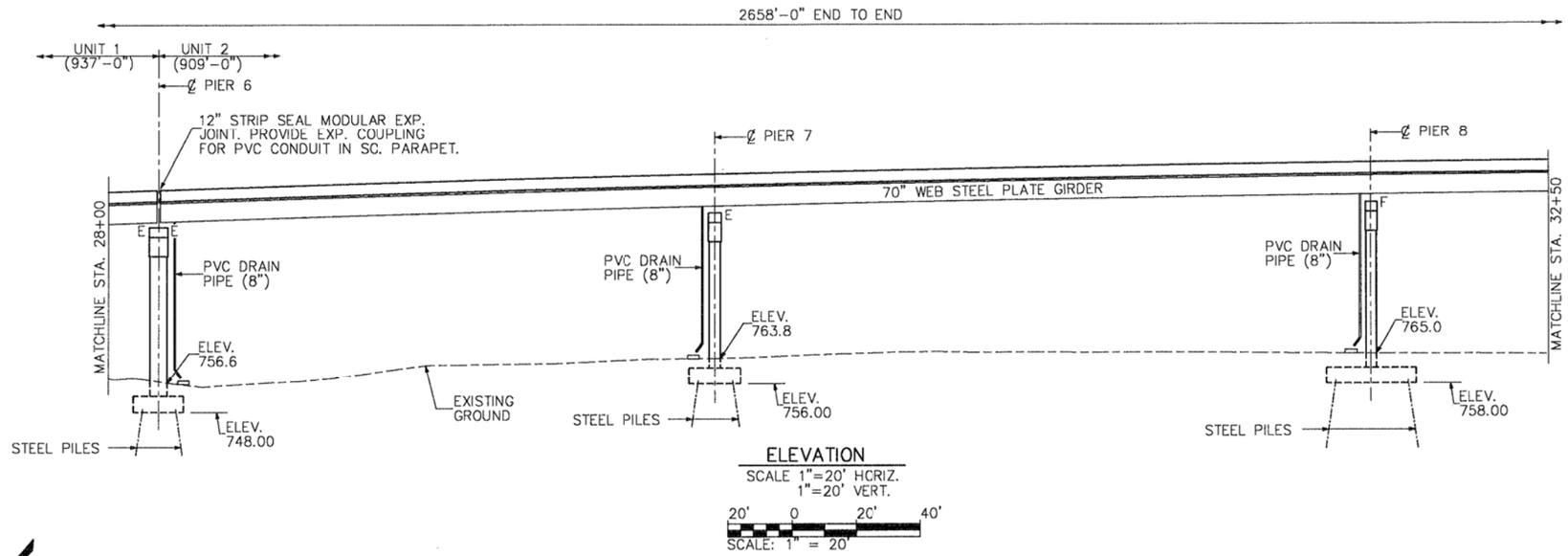

ELEVATION

SCALE 1"=20' HORIZ.
1"=20' VERT.

20' 0 20' 40'
SCALE: 1" = 20'

LEGEND

SOIL BORING LOCATION

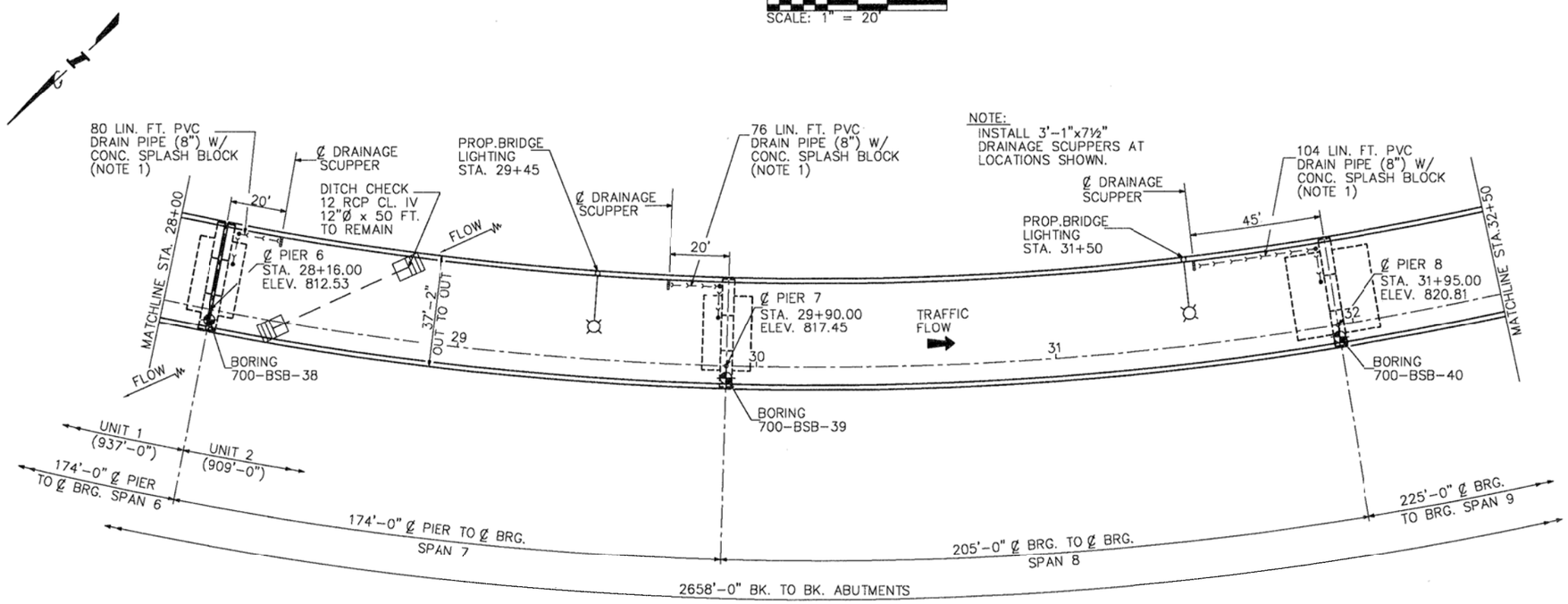

PLAN

USER NAME = diazia	DESIGNED -	REVISED -	STATE OF ILLINOIS DEPARTMENT OF TRANSPORTATION	EXISTING GENERAL PLAN SN: 099-3013	VAR. RTE.	SECTION	COUNTY	TOTAL SHEETS	SHEET NO.
	DRAWN -	REVISED -			VAR.	2019-155-BR	VARIOUS	107	92
PLOT SCALE = 100.0000 ' / in.	CHECKED -	REVISED -					CONTRACT NO. 62K32		
PLOT DATE = 12/6/2019	DATE -	REVISED -		SCALE: SHEET OF SHEETS STA. TO STA.		ILLINOIS	FED. AID PROJECT		

MODEL: Default
FILE NAME: pw:\\uhanroom.dot.illinois.gov:PWIDOT\Documents\IDOT Offices\District 1\Projects\D132320\CADData\Design\D132320-erosalt.dgn

FOR INFORMATION ONLY

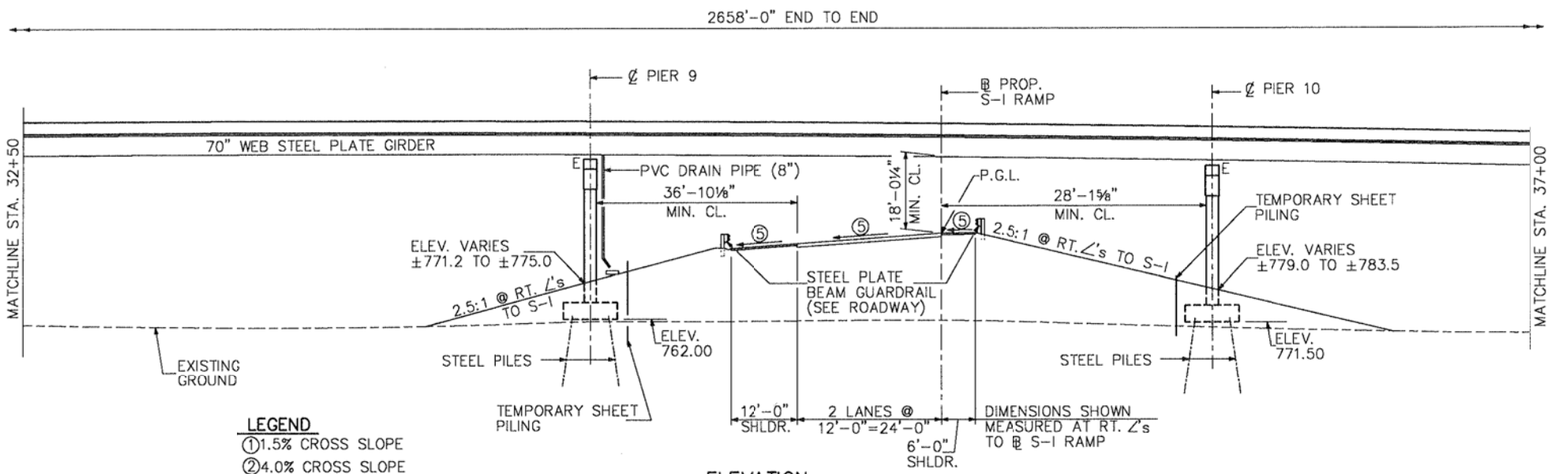

LEGEND
1. 1.5% CROSS SLOPE
2. 4.0% CROSS SLOPE
3. 7.0% CROSS SLOPE
4. 6.4% CROSS SLOPE
5. 7.2% CROSS SLOPE
6. 8.0% CROSS SLOPE
- SOIL BORING LOCATION

ELEVATION
SCALE 1"=20' HORIZ.
1"=20' VERT.
20' 0 20' 40'
SCALE: 1" = 20'

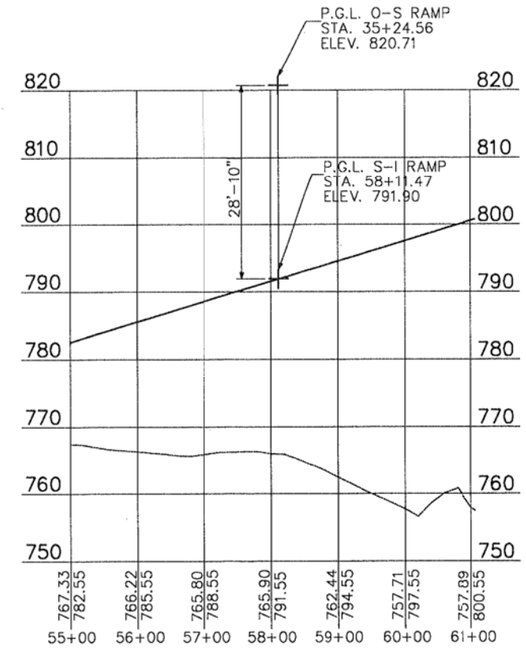

S-I RAMP PROFILE

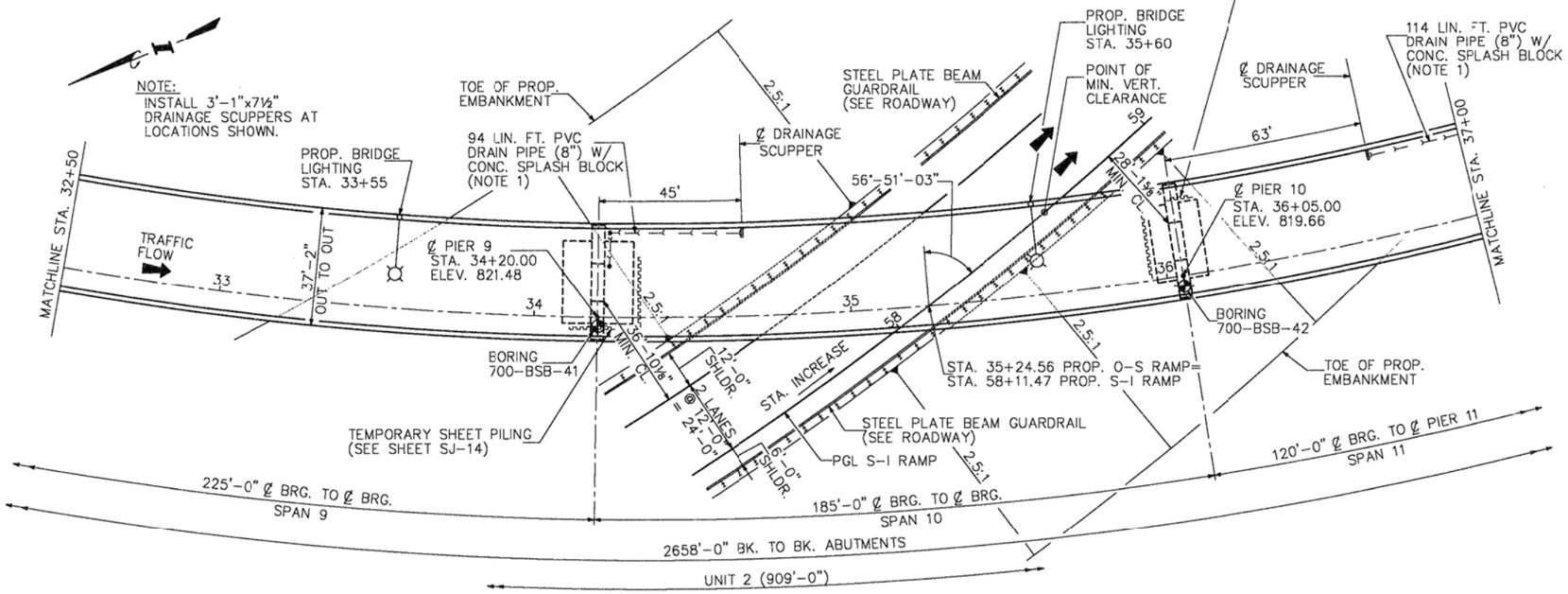

PLAN

USER NAME = diazia	DESIGNED -	REVISED -	
	DRAWN -	REVISED -	
PLOT SCALE = 100.0000 ' / in.	CHECKED -	REVISED -	
PLOT DATE = 12/6/2019	DATE -	REVISED -	

STATE OF ILLINOIS
DEPARTMENT OF TRANSPORTATION

EXISTING GENERAL PLAN
SN: 099-3013

SCALE: | SHEET OF SHEETS | STA. TO STA.

VAR. RTE.	SECTION	COUNTY	TOTAL SHEETS	SHEET NO.
VAR.	2019-155-BR	VARIOUS	107	93
		CONTRACT NO. 62K32		
	ILLINOIS	FED. AID PROJECT		

MODEL: Default
FILE NAME: pw:\\ubinoom.dot.illinois.gov:PWIDOT\Documents\IDOT Offices\District 1\Projects\D132320\CADData\Design\D132320-ereplan.dgn

FOR INFORMATION ONLY

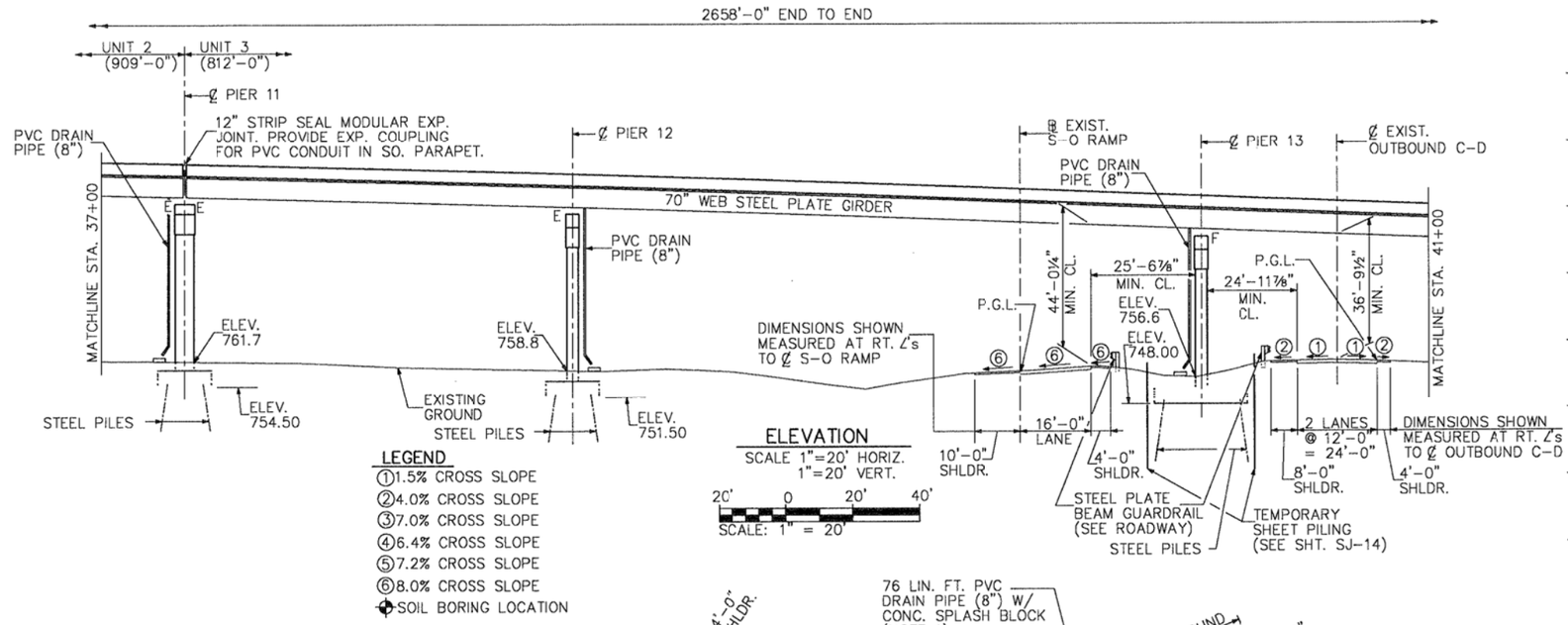

ELEVATION

SCALE 1"=20' HORIZ.
1"=20' VERT.

SCALE: 1" = 20'

LEGEND

1. 1.5% CROSS SLOPE
2. 4.0% CROSS SLOPE
3. 7.0% CROSS SLOPE
4. 6.4% CROSS SLOPE
5. 7.2% CROSS SLOPE
6. 8.0% CROSS SLOPE

SOIL BORING LOCATION

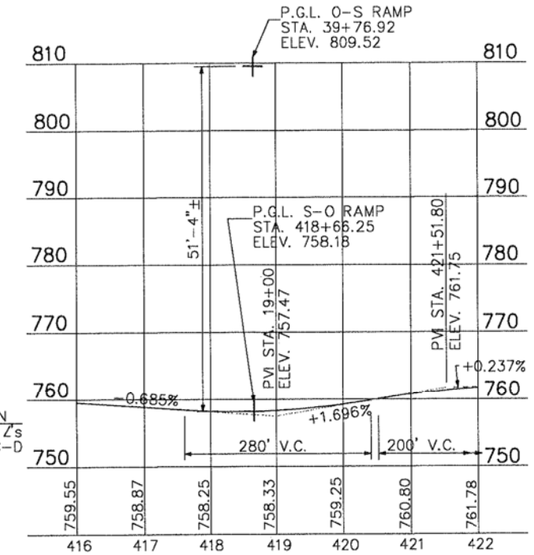

S-O RAMP PROFILE (EXISTING)

NOTE:
INSTALL 3'-1"x7½" DRAINAGE SCUPPERS AT LOCATIONS SHOWN.

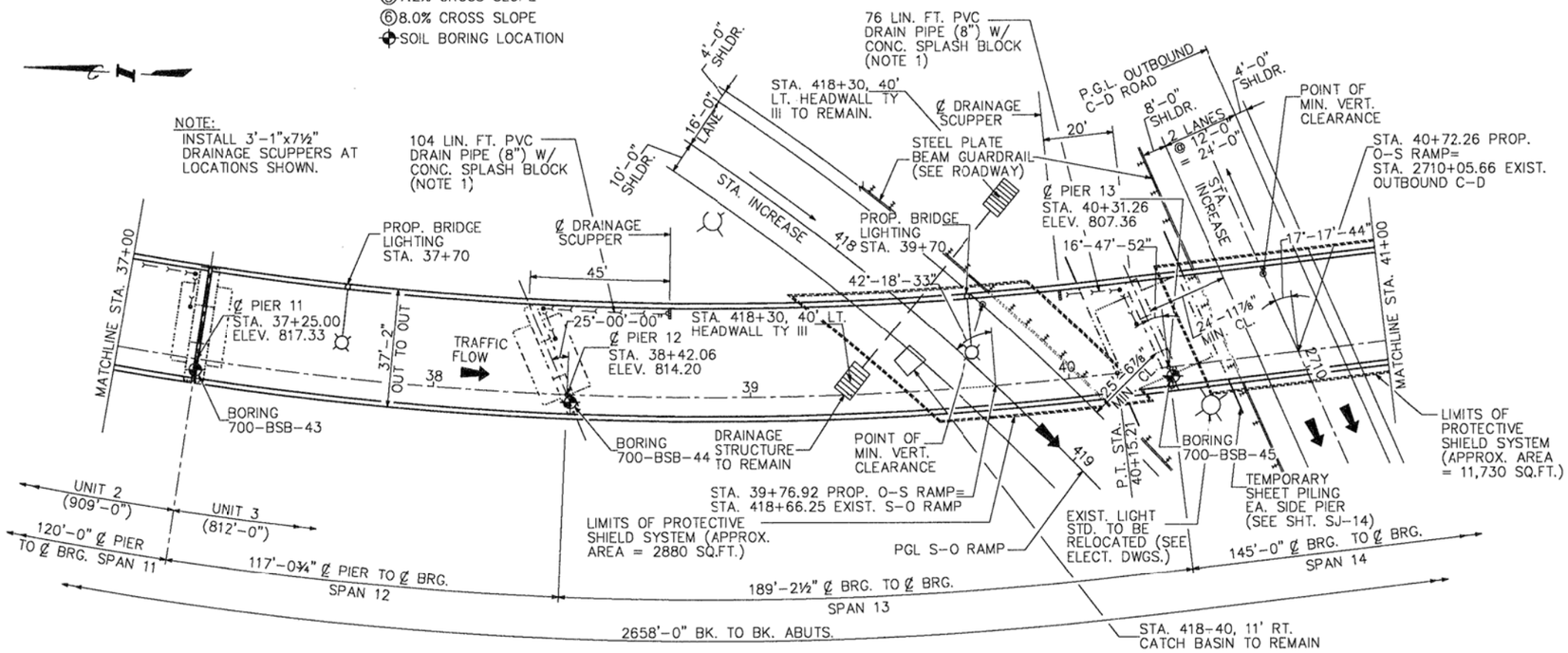

PLAN

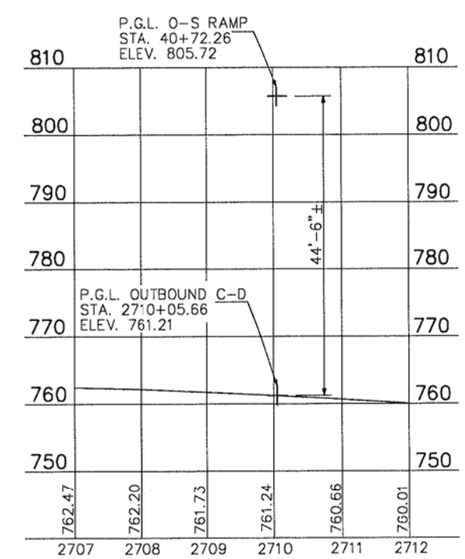

OUTBOUND C-D PROFILE (EXISTING)

MODEL: Default
FILE NAME: pw:\\ahnroom.dot.illinois.gov:PWIDOT\Documents\IDOT Offices\District 1\Projects\D132320\CADData\Design\D132320-ereslr.dgn

USER NAME = diazia	DESIGNED -	REVISED -	
	DRAWN -	REVISED -	
PLOT SCALE = 100.0000 ' / in.	CHECKED -	REVISED -	
PLOT DATE = 12/6/2019	DATE -	REVISED -	

STATE OF ILLINOIS
DEPARTMENT OF TRANSPORTATION

EXISTING GENERAL PLAN
SN: 099-3013

SCALE: | SHEET OF SHEETS | STA. TO STA.

VAR. RTE.	SECTION	COUNTY	TOTAL SHEETS	SHEET NO.
VAR.	2019-155-BR	VARIOUS	107	94

CONTRACT NO. 62K32

ILLINOIS | FED. AID PROJECT

FOR INFORMATION ONLY

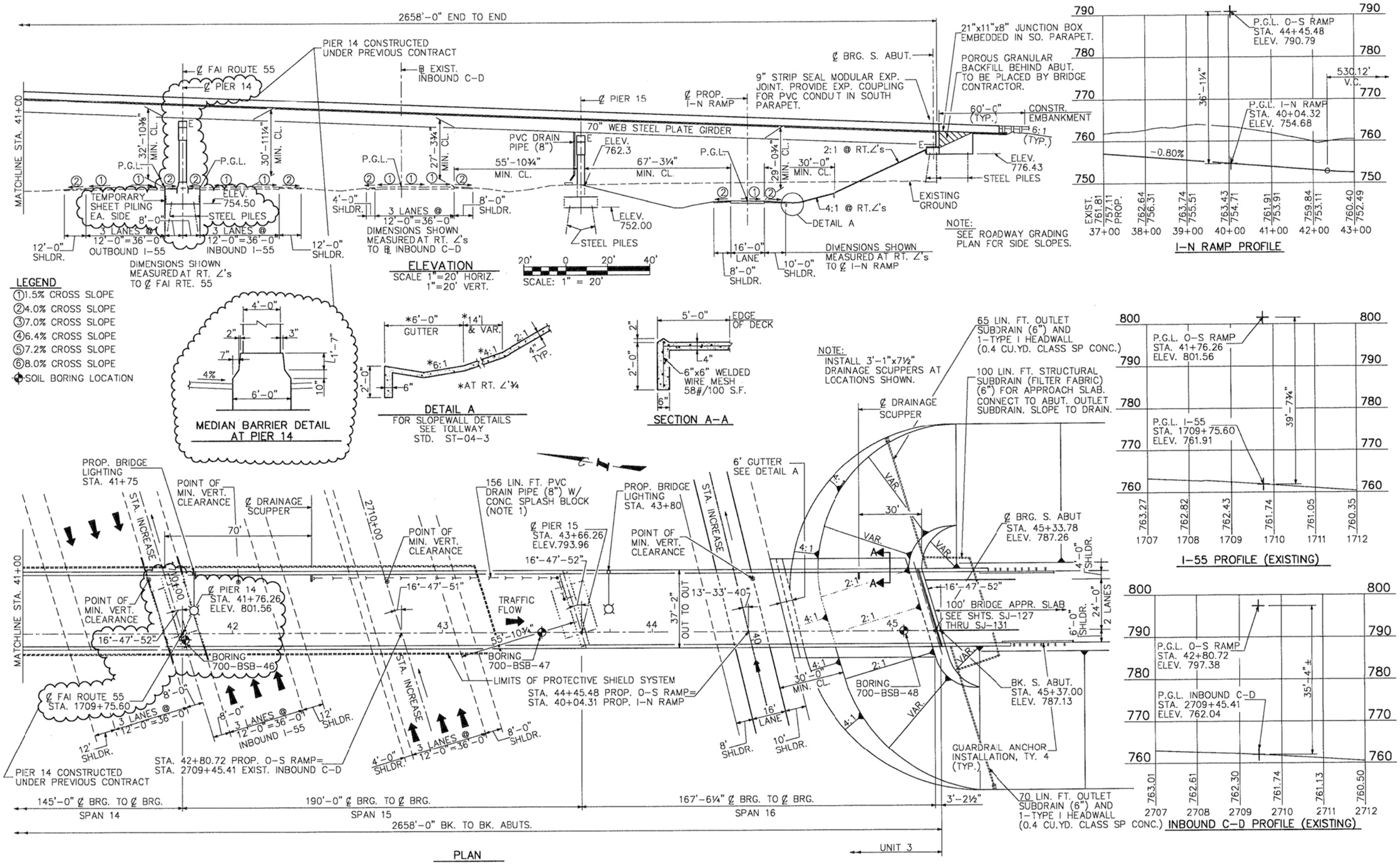

USER NAME = diazia	DESIGNED -	REVISED -
	DRAWN -	REVISED -
PLOT SCALE = 100.0000 ' / in.	CHECKED -	REVISED -
PLOT DATE = 12/6/2019	DATE -	REVISED -

STATE OF ILLINOIS
DEPARTMENT OF TRANSPORTATION

EXISTING GENERAL PLAN
SN: 099-3013

SCALE: | SHEET OF SHEETS | STA. TO STA.

VAR. RTE.	SECTION	COUNTY	TOTAL SHEETS	SHEET NO.
VAR.	2019-155-BR	VARIOUS	107	95

CONTRACT NO. 62K32

ILLINOIS | FED. AID PROJECT

MODEL: Default
FILE NAME: pw:\\ahnroom.dot.illinois.gov:PWIDOT\Documents\IDOT Offices\District 1\Projects\D132320\CADData\Design\D132320-ep-alr.dgn

FOR INFORMATION ONLY

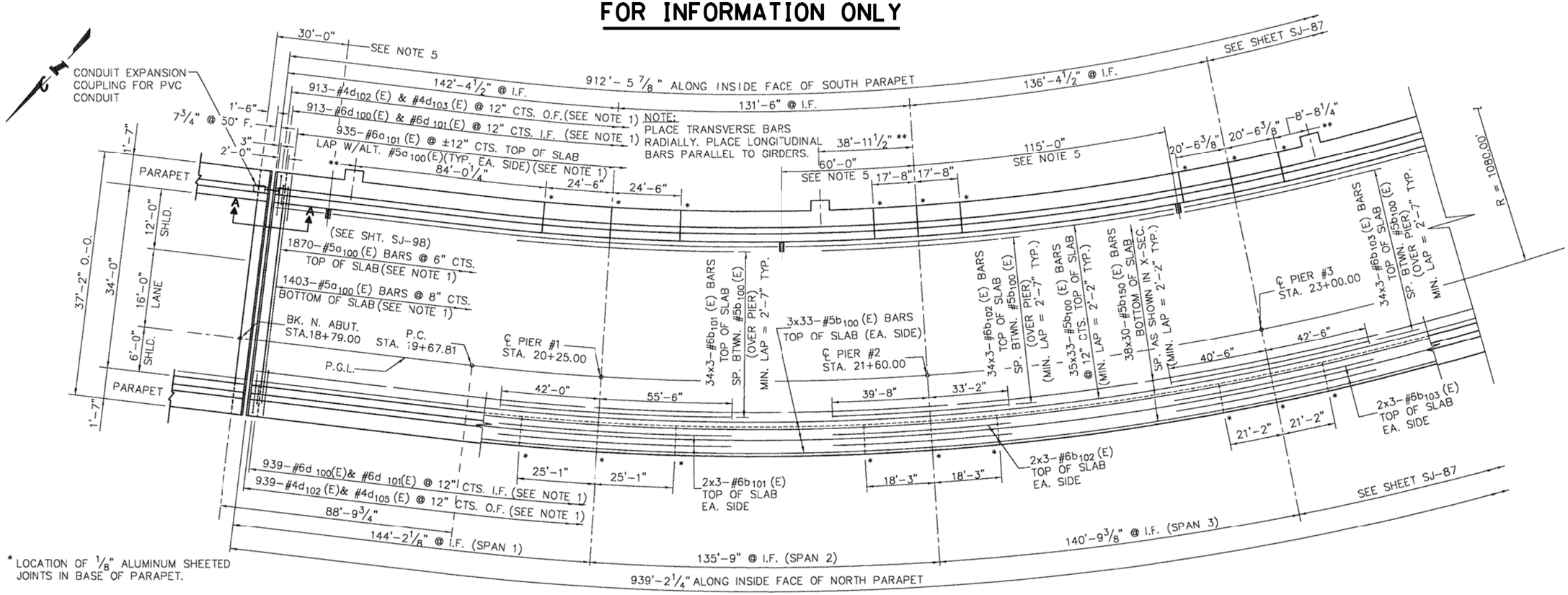

PLAN VIEW
N.T.S.

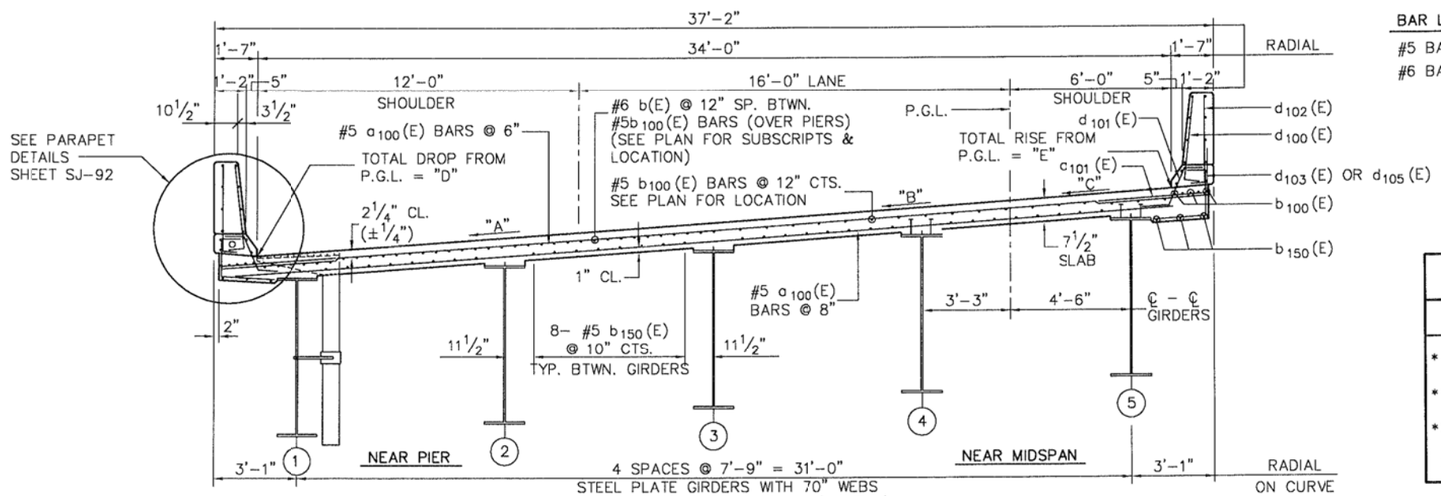

TYPICAL CROSS SECTION (UNIT 1)
N.T.S.

BAR LAPS (MIN.)

#5 BAR = 2'-2"
#6 BAR = 2'-7"

NOTES:

1.) THE NUMBER OF a(E), b(E), c(E), d(E) BARS SHOWN IN DECK PLAN INDICATE TOTAL REQUIRED FOR UNIT 1.

2.) REINFORCEMENT BARS DESIGNATED (E) SHALL BE EPOXY COATED.

3.) BARS INDICATED THUS 35x33-#5 ETC. INDICATES 35 LINES OF BARS W/33 LENGTHS PER LINE.

4.) SEE SHEET SJ-98 FOR SUPERSTRUCTURE DETAILS & SHEET SJ-105 FOR BILL OF MATERIALS.

5.) LOCATION OF DRAINAGE SCUPPER. SEE SHEET SJ-98 FOR DETAILS.

6.) FOR PARAPET DETAILS, SEE SHEET SJ-92.

UNIT 1 DECK CROSS SLOPES

STATION	"A"	"B"	"C"	"D"	"E"
*18+79.00	0.04 FT./FT.	0.02460 FT./FT.	0.01760 FT./FT.	10 1/2"	1 1/4"
*19+53.33	0.04 FT./FT.	0.04 FT./FT.	0.04 FT./FT.	1'-1 1/2"	2 7/8"
*21+07.81	0.072 FT./FT.	0.072 FT./FT.	0.072 FT./FT.	2'-0 1/8"	5 1/8"
28+16.00	0.072 FT./FT.	0.072 FT./FT.	0.072 FT./FT.	2'-0 1/8"	5 1/8"

* WITHIN SUPERELEVATION TRANSITION

MODEL: Default
FILE NAME: pw:\\ubanroom.dot.illinois.gov:PWIDOT\Documents\IDOT Offices\District 1\Projects\D132320\CADData\Design\D132320-ergsdf.dgn

USER NAME = diazia	DESIGNED -	REVISED -	
	DRAWN -	REVISED -	
PLOT SCALE = 100.0000 ' / in.	CHECKED -	REVISED -	
PLOT DATE = 12/6/2019	DATE -	REVISED -	

STATE OF ILLINOIS
DEPARTMENT OF TRANSPORTATION

EXISTING DECK PLAN
SN: 099-3013

SCALE: SHEET OF SHEETS STA. TO STA.

VAR. RTE.	SECTION	COUNTY	TOTAL SHEETS	SHEET NO.
VAR.	2019-155-BR	VARIOUS	107	96
		CONTRACT NO. 62K32		
		ILLINOIS FED. AID PROJECT		

FOR INFORMATION ONLY

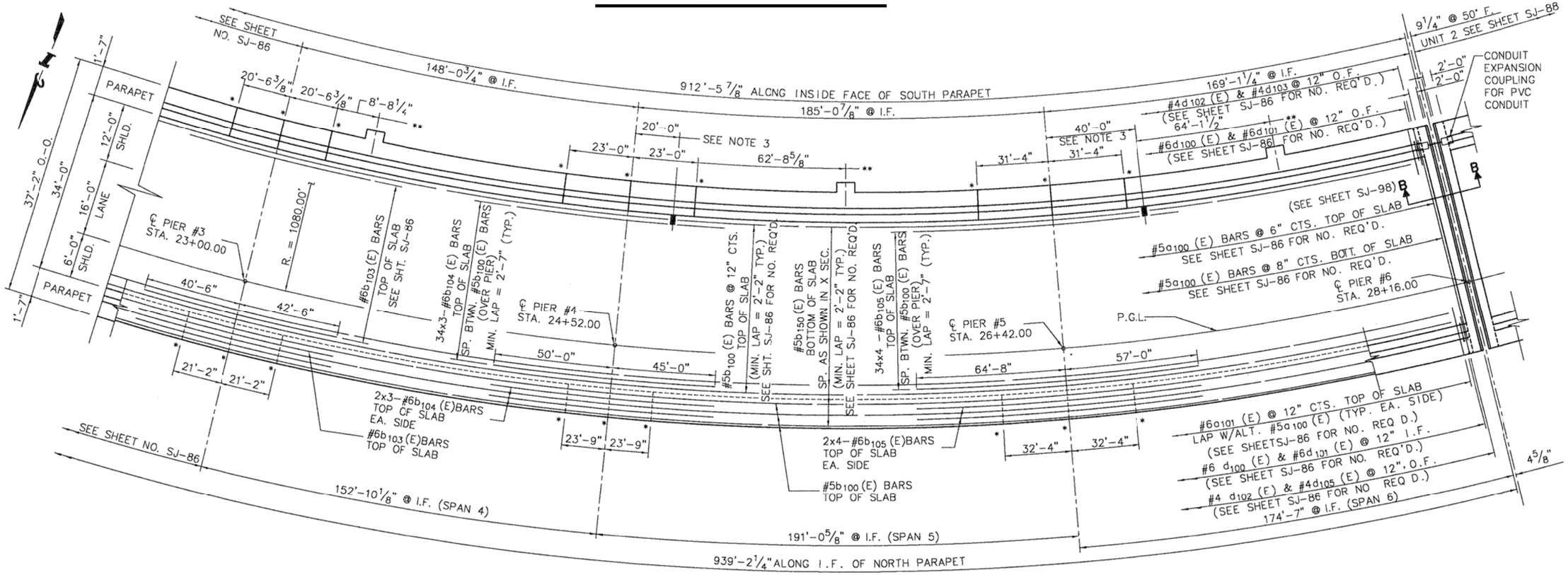

PLAN VIEW
N.T.S.

* LOCATION OF 1/8" ALUMINUM SHEETED JOINTS IN BASE OF PARAPET.

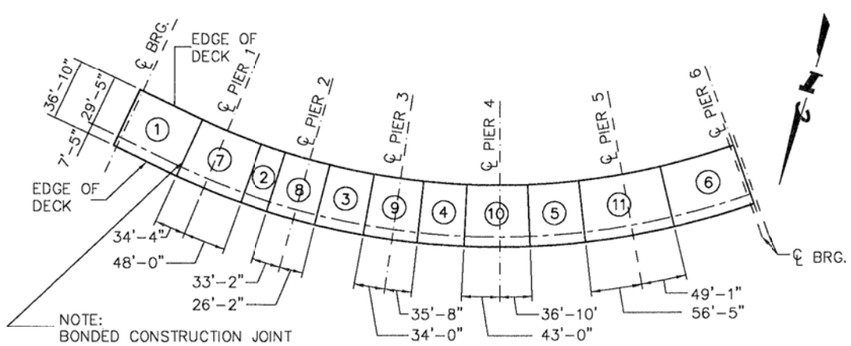

UNIT 1
LOCATION OF CONSTRUCTION JOINTS
(1) INDICATES POURING SEQUENCE
N.T.S.

CONTRACTOR MAY PROPOSE ALTERNATE POURING SEQUENCE. COORDINATE WITH AUTHORITY PRIOR TO CONSTRUCTION.

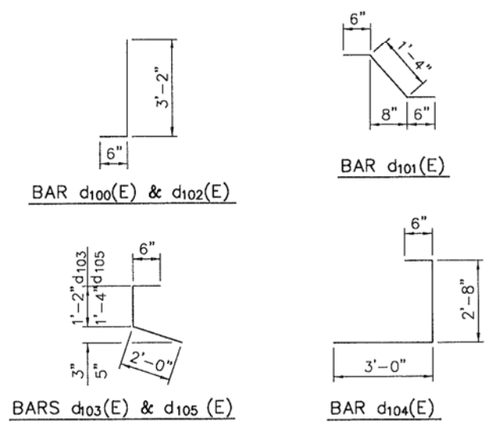

BAR LAPS (MIN.)

#5 BAR = 2'-2"
#6 BAR = 2'-7"

NOTES:

1.) PLACE TRANSVERSE BARS RADIALLY. PLACE LONGITUDINAL BARS PARALLEL TO GIRDERS.

2.) SEE SHEET SJ-86 FOR TOTAL NUMBER OF a(E), b(E) & d(E) BARS REQUIRED FOR UNIT 1.

3.) LOCATION OF DRAINAGE SCUPPER. SEE SHEET SJ-98 FOR DETAILS.

4.) FOR PARAPET DETAILS, SEE SHEET SJ-93.

MODEL: Default
FILE NAME: pw:\\dlanroom.dot.illinois.gov:PWIDOT\Documents\IDOT Offices\District 1\Projects\D132320\CADData\Design\D132320-ereplat.dgn

USER NAME = diazia	DESIGNED -	REVISED -	
	DRAWN -	REVISED -	
PLOT SCALE = 100.0000 ' / in.	CHECKED -	REVISED -	
PLOT DATE = 12/6/2019	DATE -	REVISED -	

STATE OF ILLINOIS
DEPARTMENT OF TRANSPORTATION

EXISTING DECK PLAN
SN: 099-3013

SCALE: | SHEET OF SHEETS | STA. TO STA.

VAR. RTE.	SECTION	COUNTY	TOTAL SHEETS	SHEET NO.
VAR.	2019-155-BR	VARIOUS	107	97
		CONTRACT NO. 62K32		
	ILLINOIS	FED. AID PROJECT		

FOR INFORMATION ONLY

NOTE:
PLACE TRANSVERSE BARS RADIALLY. PLACE LONGITUDINAL BARS PARALLEL TO GIRDERS.

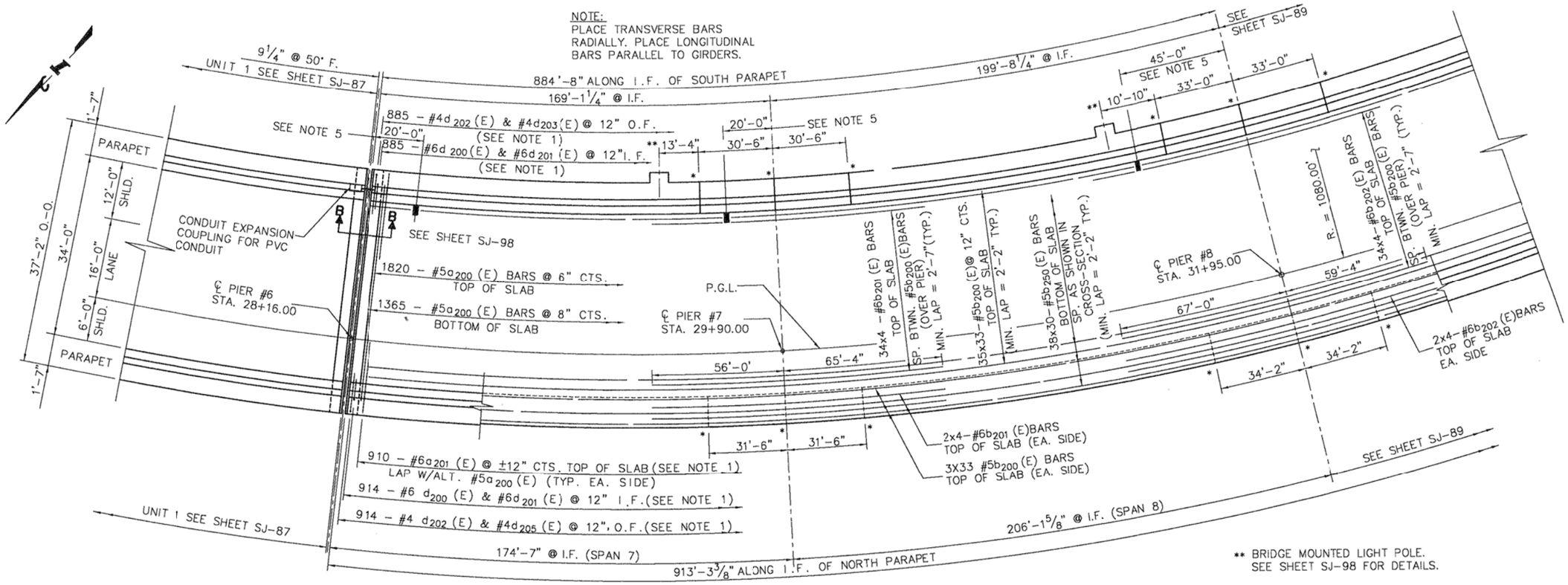

PLAN VIEW
N.T.S.

** BRIDGE MOUNTED LIGHT POLE. SEE SHEET SJ-98 FOR DETAILS.

* LOCATION OF 1/8" ALUMINUM SHEETED JOINTS IN BASE OF PARAPET.

BAR LAPS (MIN.)

#5 BAR = 2'-2"
#6 BAR = 2'-7"

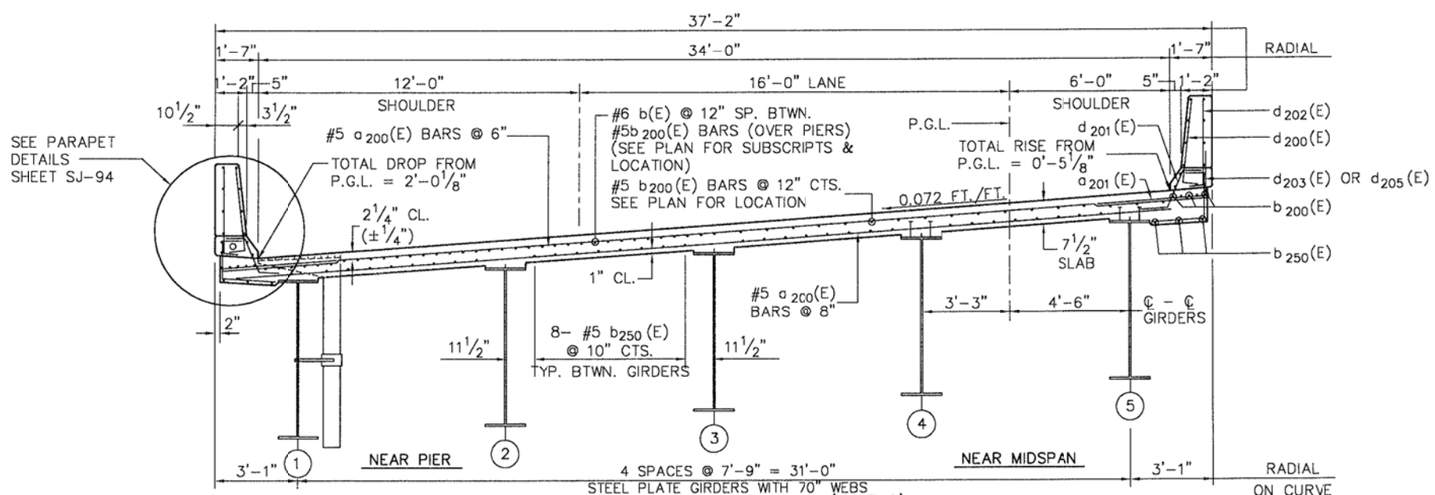

TYPICAL CROSS SECTION (UNIT 2)
(LOOKING AHEAD STATION)
N.T.S.

NOTES:

1.) THE NUMBER OF a(E), b(E), c(E), d(E) BARS SHOWN IN DECK PLAN INDICATE TOTAL NEEDED FOR UNIT 2.

2.) REINFORCEMENT BARS DESIGNATED (E) SHALL BE EPOXY COATED.

3.) BARS INDICATED THUS 35x33-#5 ETC. INDICATES 35 LINES OF BARS W/33 LENGTHS PER LINE.

4.) SEE SHEET SJ-98 FOR SUPERSTRUCTURE DETAILS & SHEET SJ-105 FOR BILL OF MATERIALS.

5.) LOCATION OF DRAINAGE SCUPPER. SEE SHEET SJ-98 FOR DETAILS.

6.) FOR PARAPET DETAILS, SEE SHEET SJ-94.

MODEL: Default
FILE NAME: pw:\\ullanroom.dot.illinois.gov:PWIDOT\Documents\IDOT Offices\District 1\Projects\D132320\CADData\Design\D132320-ecresalt.dgn

USER NAME = diazia	DESIGNED -	REVISED -	STATE OF ILLINOIS DEPARTMENT OF TRANSPORTATION	EXISTING DECK PLAN SN: 099-3013	VAR. RTE.	SECTION	COUNTY	TOTAL SHEETS	SHEET NO.
	DRAWN -	REVISED -			VAR.	2019-155-BR	VARIOUS	107	98
PLOT SCALE = 100.0000 ' / in.	CHECKED -	REVISED -					CONTRACT NO. 62K32		
PLOT DATE = 12/6/2019	DATE -	REVISED -		SCALE: SHEET OF SHEETS STA. TO STA.		ILLINOIS	FED. AID PROJECT		

FOR INFORMATION ONLY

NOTE:
PLACE TRANSVERSE BARS RADIALLY. PLACE LONGITUDINAL BARS PARALLEL TO GIRDERS.

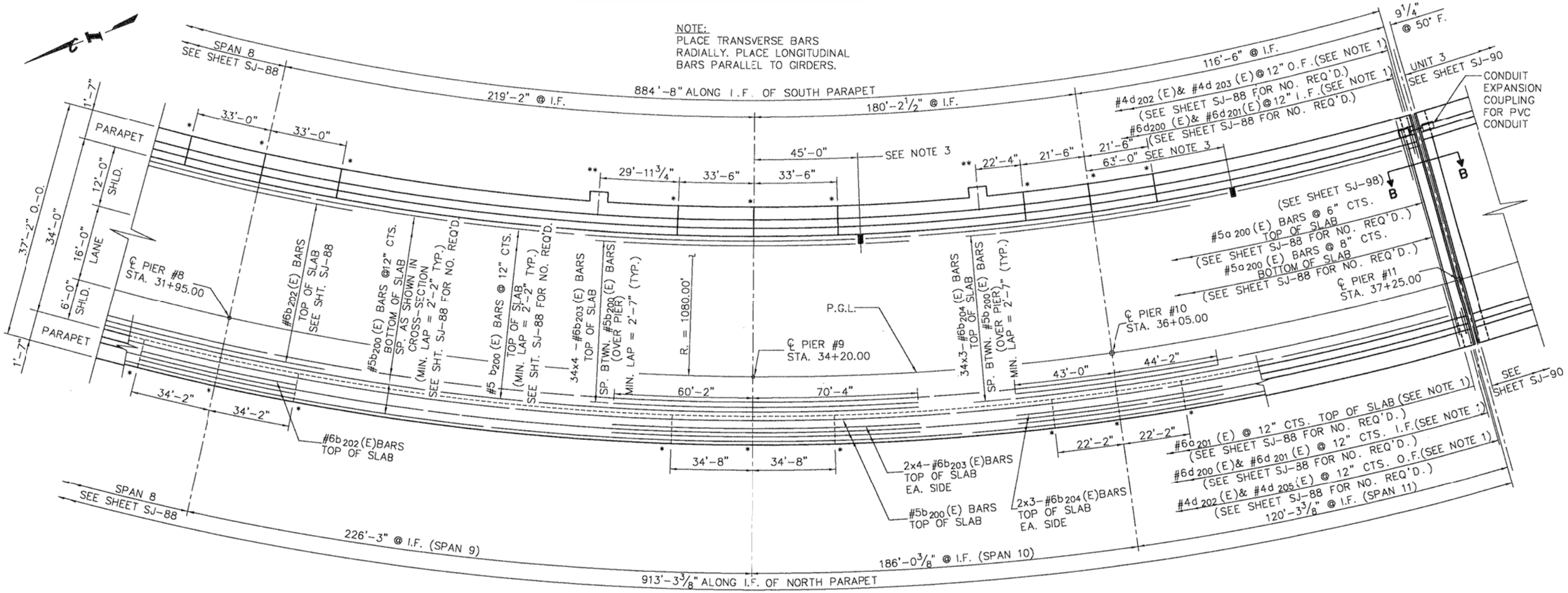

PLAN VIEW
N.T.S.

* LOCATION OF 1/8" ALUMINUM SHEETED JOINTS IN BASE OF PARAPET.

BAR LAPS (MIN.)

#5 BAR = 2'-2"
#6 BAR = 2'-7"

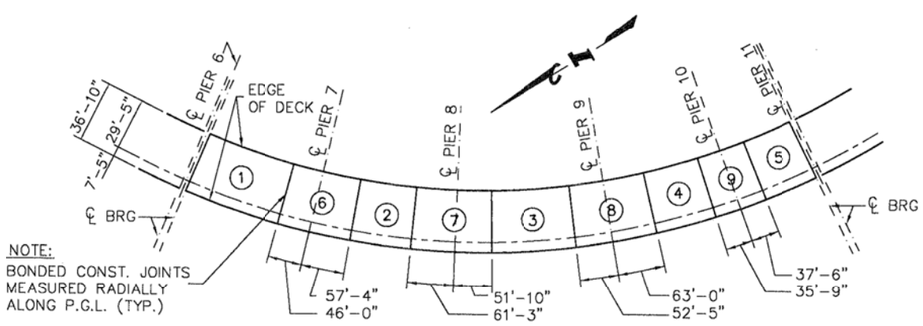

NOTE:
BONDED CONST. JOINTS MEASURED RADIALLY ALONG P.G.L. (TYP.)

UNIT 2
LOCATION OF CONSTRUCTION JOINTS
(1) INDICATES POURING SEQUENCE
N.T.S.

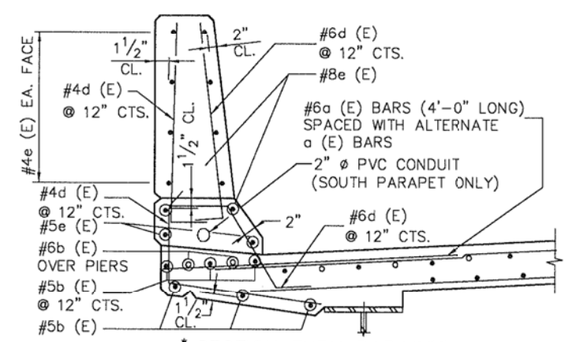

* SECTION THRU PARAPET
SHOWING REINFORCEMENT – N.T.S.

NOTES:

1.) SEE SHEET SJ-88 FOR TOTAL NUMBER OF a(E), b(E) & d(E) BARS REQUIRED FOR UNIT 2.

2.) PLACE TRANSVERSE BARS RADIALLY. PLACE LONGITUDINAL BARS PARALLEL TO GIRDERS.

3.) LOCATION OF DRAINAGE SCUPPER. SEE SHEET SJ-98 FOR DETAILS.

4.) FOR PARAPET DETAILS, SEE SHEET SJ-95.

MODEL: Default
FILE NAME: pw:\\ubinroom.dot.illinois.gov:PWIDOT\Documents\IDOT Offices\District 1\Projects\D132320\CADData\Design\D132320-ex-sulr.dgn

USER NAME = diazia	DESIGNED -	REVISED -	
	DRAWN -	REVISED -	
PLOT SCALE = 100.0000 ' / in.	CHECKED -	REVISED -	
PLOT DATE = 12/6/2019	DATE -	REVISED -	

STATE OF ILLINOIS
DEPARTMENT OF TRANSPORTATION

EXISTING DECK PLAN
SN: 099-3013

SCALE: | SHEET OF SHEETS | STA. TO STA.

VAR. RTE.	SECTION	COUNTY	TOTAL SHEETS	SHEET NO.
VAR.	2019-155-BR	VARIOUS	107	99
		CONTRACT NO. 62K32		
		ILLINOIS	FED. AID PROJECT	

FOR INFORMATION ONLY

NOTE:
PLACE TRANSVERSE BARS RADIALLY. PLACE LONGITUDINAL BARS PARALLEL TO GIRDERS.

** BRIDGE MOUNTED LIGHT POLE. SEE SHEET SJ-98 FOR DETAILS.

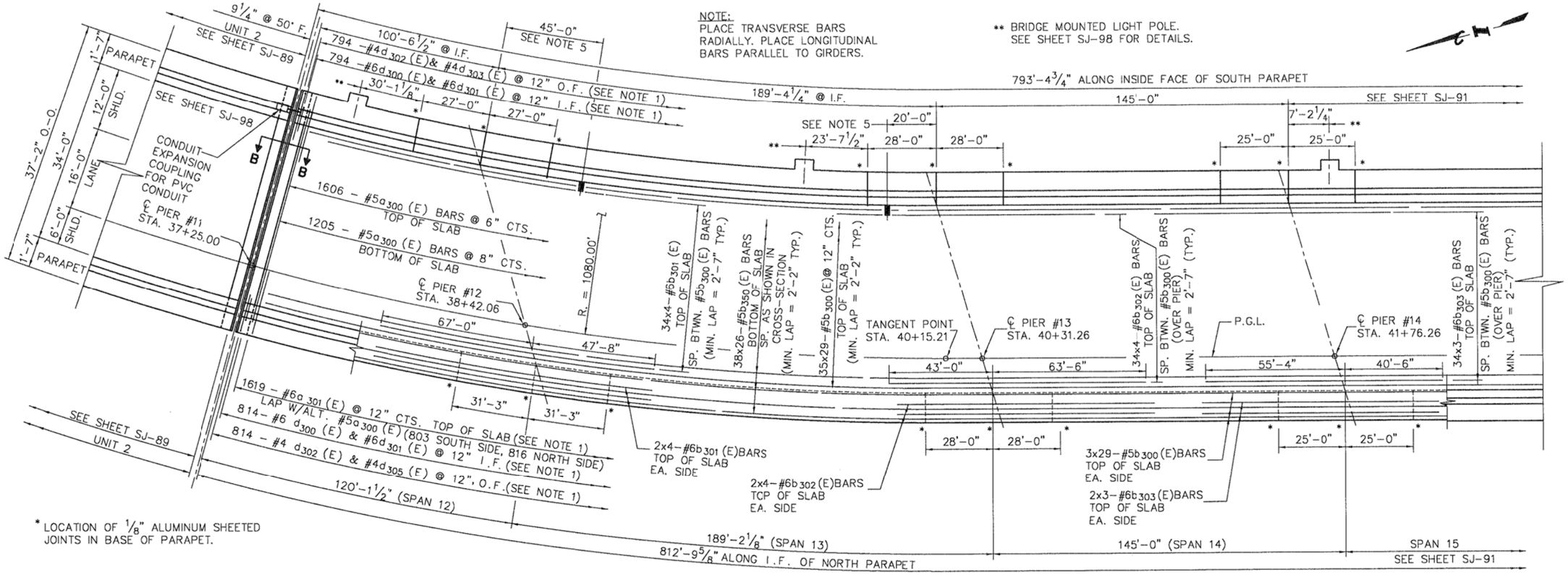

* LOCATION OF 1/8" ALUMINUM SHEETED JOINTS IN BASE OF PARAPET.

PLAN VIEW
N.T.S.

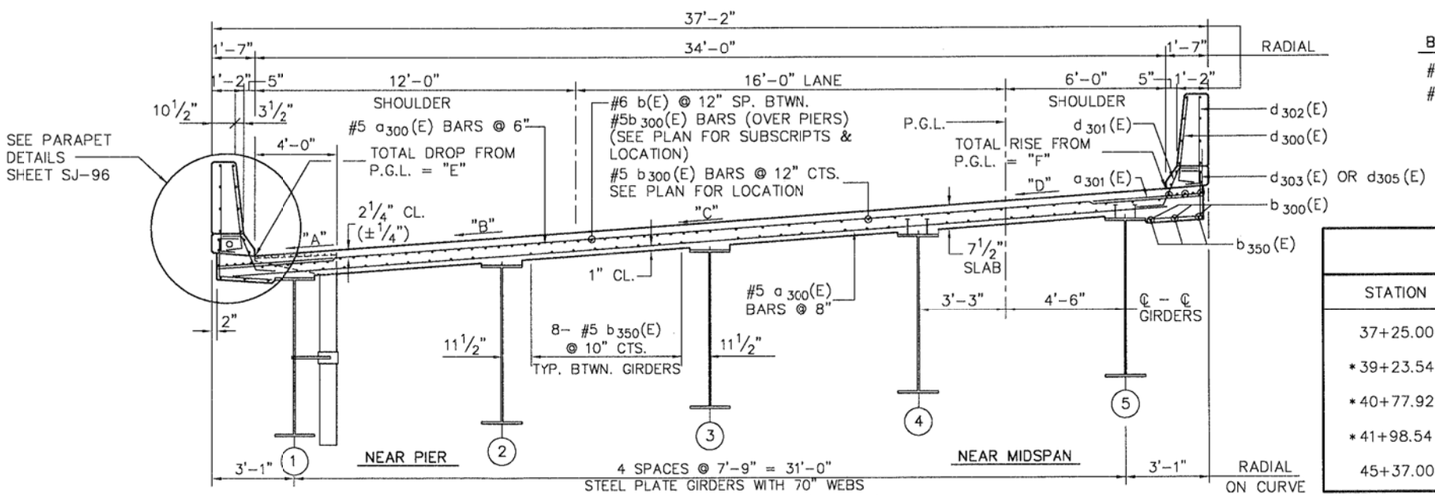

TYPICAL CROSS SECTION (UNIT 3)
(LOOKING AHEAD STATION)
N.T.S.

BAR LAPS (MIN.)

#5 BAR = 2'-2"
#6 BAR = 2'-7"

NOTES:

1.) THE NUMBER OF a(E), b(E), c(E), d(E) BARS SHOWN IN DECK PLAN INDICATE TOTAL NEEDED FOR UNIT 3.
2.) REINFORCEMENT BARS DESIGNATED (E) SHALL BE EPOXY COATED.
3.) BARS INDICATED THUS 35x33-#5 ETC. INDICATES 35 LINES OF BARS W/33 LENGTHS PER LINE.
4.) SEE SHEET SJ-98 FOR SUPERSTRUCTURE DETAILS & SHEET SJ-105 FOR BILL OF MATERIALS.
5.) LOCATION OF DRAINAGE SCUPPER. SEE SHEET SJ-98 FOR DETAILS.
6.) FOR PARAPET DETAILS, SEE SHEET SJ-95.

UNIT 3 DECK CROSS SLOPES

STATION	"A"	"B"	"C"	"D"	"E"	"F"
37+25.00	0.072 FT./FT.	0.072 FT./FT.	0.072 FT./FT.	0.072 FT./FT.	2'-0 1/8"	5 1/8"
*39+23.54	0.072 FT./FT.	0.072 FT./FT.	0.072 FT./FT.	0.072 FT./FT.	2'-0 1/8"	5 1/8"
*40+77.92	0.04 FT./FT.	0.04 FT./FT.	0.04 FT./FT.	0.04 FT./FT.	1'-1 1/2"	2 7/8"
*41+98.54	0.04 FT./FT.	0.015 FT./FT.	0.015 FT./FT.	0.015 FT./FT.	6 1/4"	1 1/8"
45+37.00	0.04 FT./FT.	0.015 FT./FT.	0.015 FT./FT.	0.015 FT./FT.	6 1/4"	1 1/8"

* WITHIN SUPERELEVATION TRANSITION

FOR INFORMATION ONLY

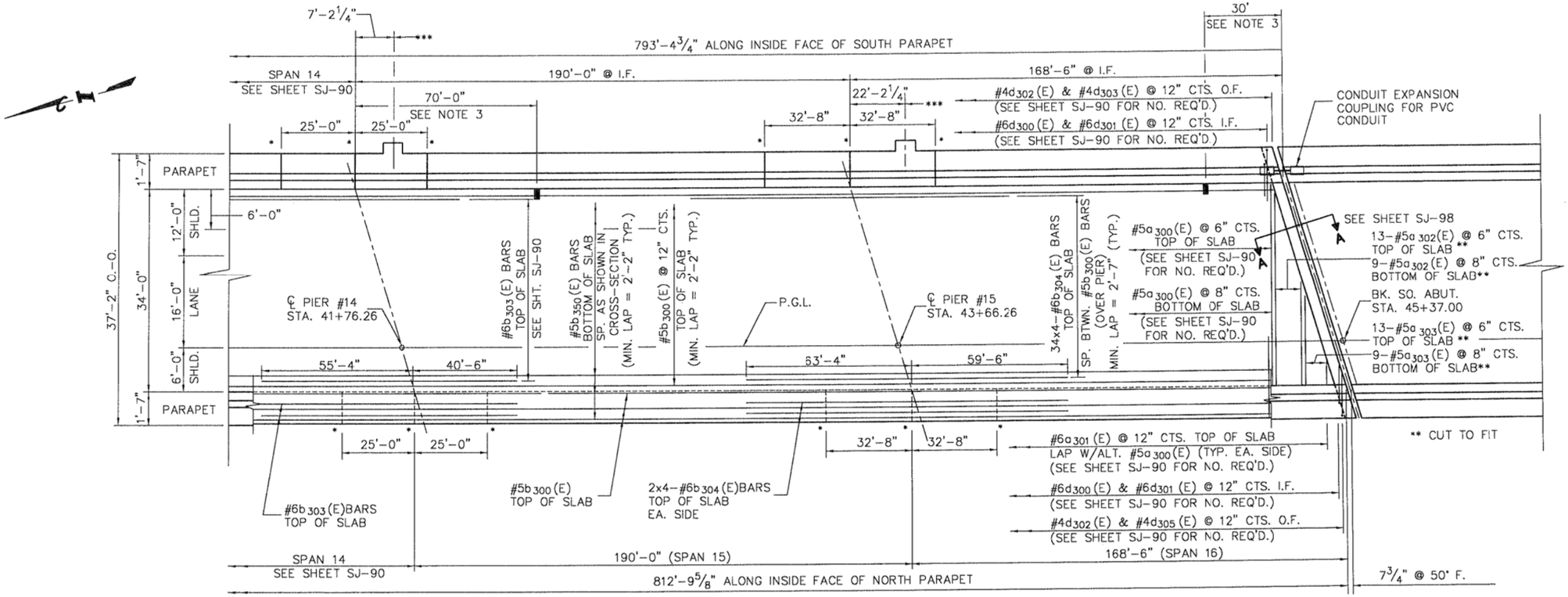

PLAN VIEW
N.T.S.

* LOCATION OF 1/8" ALUMINUM SHEETED JOINTS IN BASE OF PARAPET.

BAR LAPS (MIN.)

#5 BAR = 2'-2"
#6 BAR = 2'-7"

NOTES:

1.) PLACE TRANSVERSE BARS RADIALLY. PLACE LONGITUDINAL BARS PARALLEL TO GIRDERS.

2.) SEE SHEET SJ-90 FOR TOTAL NUMBER OF a(E), b(E) & d(E) BARS REQUIRED FOR UNIT 3.

3.) LOCATION OF DRAINAGE SCUPPER. SEE SHEET SJ-98 FOR DETAILS.

4.) FOR PARAPET DETAILS, SEE SHEET SJ-97.

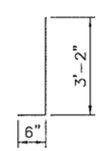

BAR d_{300}(E) & d_{302}(E)

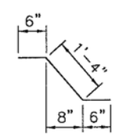

BAR d_{301}(E)

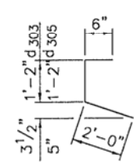

BARS d_{303}(E) & d_{305} (E)

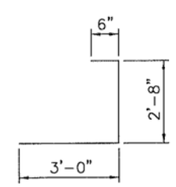

BAR d_{304}(E)

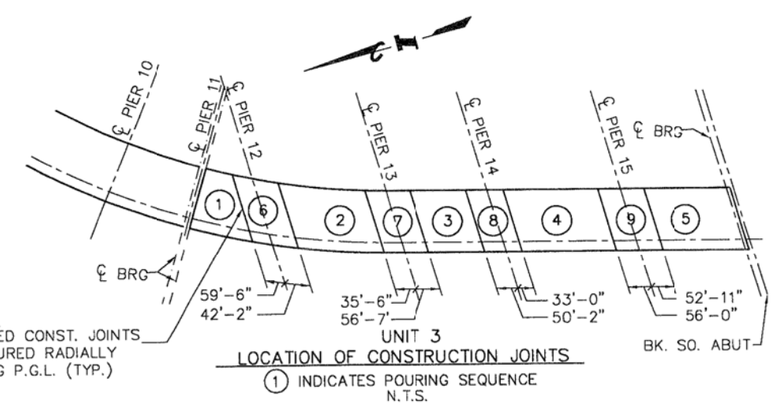

NOTE:
BONDED CONST. JOINTS MEASURED RADIALLY ALONG P.G.L. (TYP.)

UNIT 3
LOCATION OF CONSTRUCTION JOINTS
(1) INDICATES POURING SEQUENCE
N.T.S.

MODEL: Default
FILE NAME: pw:\\planroom.dot.illinois.gov:PWIDOT\Documents\IDOT Offices\District 1\Projects\D132320\CADData\Design\D132320-ergsplr.dgn

USER NAME = diazia	DESIGNED -	REVISED -	STATE OF ILLINOIS DEPARTMENT OF TRANSPORTATION
	DRAWN -	REVISED -	
PLOT SCALE = 100.0000 ' / in.	CHECKED -	REVISED -	
PLOT DATE = 12/6/2019	DATE -	REVISED -	

EXISTING DECK PLAN
SN: 099-3013

SCALE: SHEET OF SHEETS STA. TO STA.

VAR. RTE.	SECTION	COUNTY	TOTAL SHEETS	SHEET NO.
VAR.	2019-155-BR	VARIOUS	107	101
		CONTRACT NO. 62K32		
		ILLINOIS	FED. AID PROJECT	

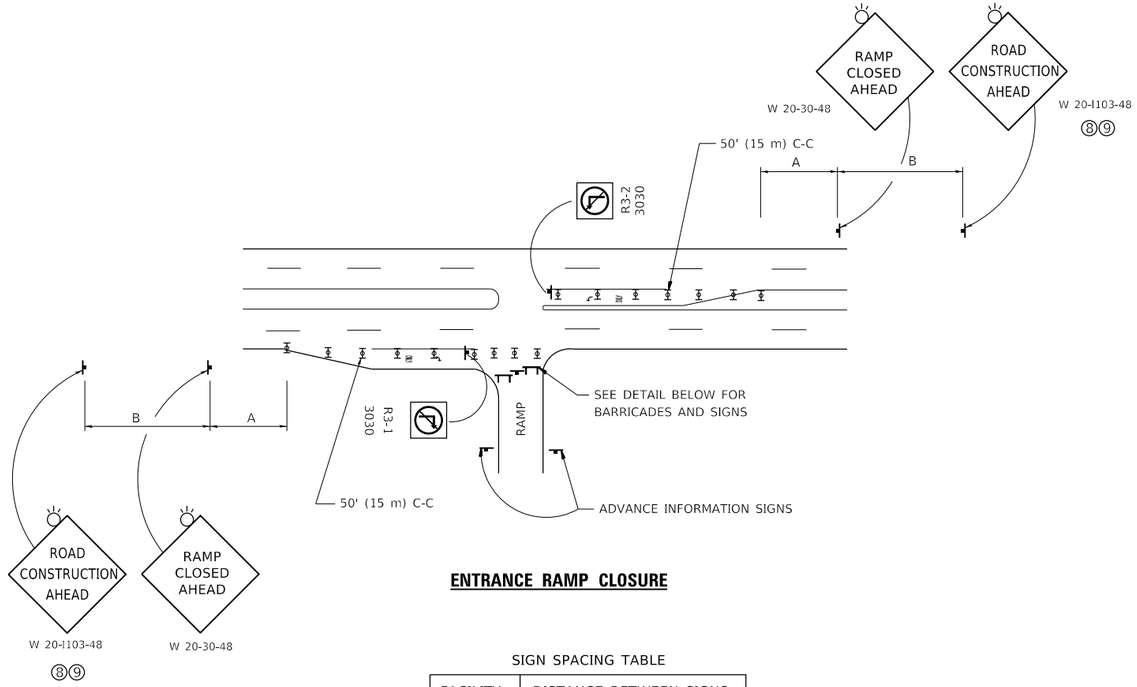

ENTRANCE RAMP CLOSURE

SIGN SPACING TABLE

FACILITY	DISTANCE BETWEEN SIGNS	
	A	B
EXPRESSWAY >24 HOURS	1000' (300 m)	1500' (450 m)
EXPRESSWAY ≤24 HOURS	500' (150 m)	500' (150 m)
ARTERIAL 55 MPH	500' (150 m)	500' (150 m)
ARTERIAL 50-45 MPH	350' (100 m)	350' (100 m)
ARTERIAL <45 MPH	200' (60 m)	200' (60 m)

DISTANCES MAY BE SHORTENED DEPENDING UPON THE PROXIMITY OF ADJACENT RAMPS OR INTERSECTIONS.

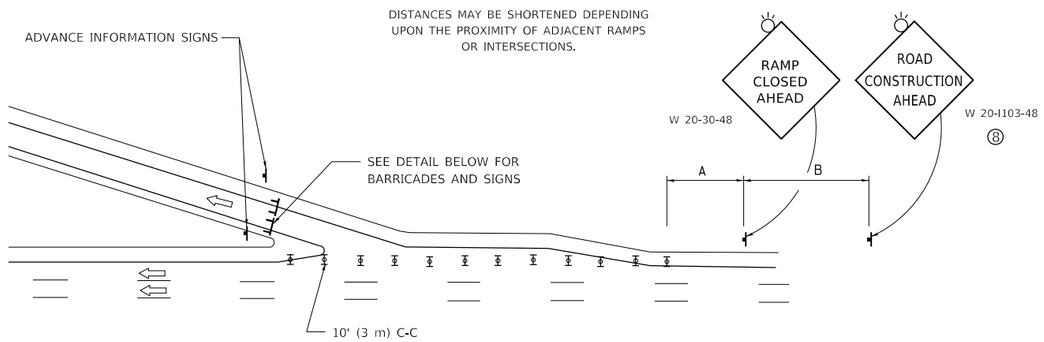

EXIT RAMP CLOSURE

SYMBOLS

TYPE II BARRICADE OR DRUM

TYPE III BARRICADE WITH 2 FLASHING LIGHTS

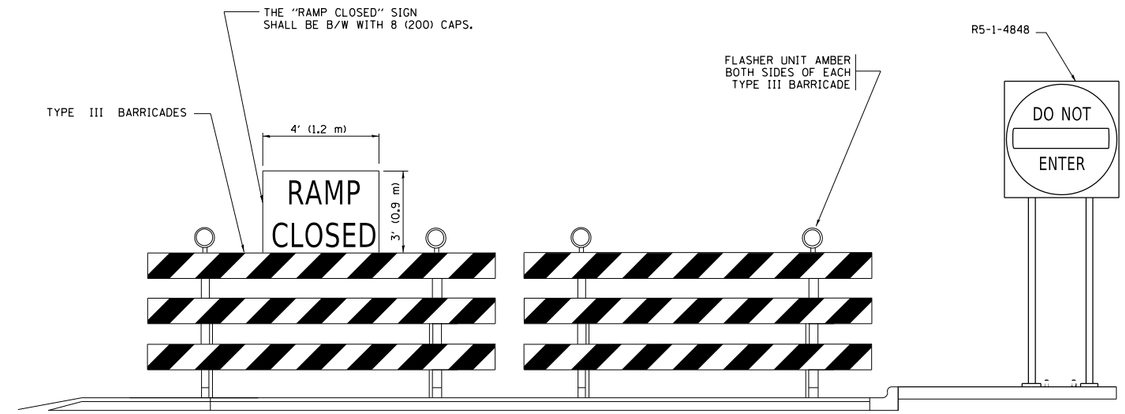

DETAIL FOR REQUIRED BARRICADES & SIGNS

RAMP CLOSURE ADVANCE WARNING SIGN

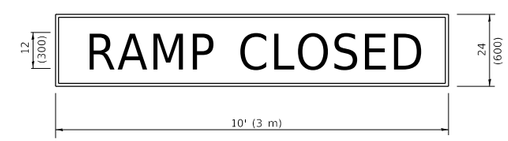

BLACK LEGEND ON ORANGE BACKGROUND MOUNTED DIAGONALLY
E MOD FONT
1 (25) BORDER
THESE SIGNS ARE REQUIRED ON ALL THE EXIT GUIDE SIGNS FOR EXIT RAMPS THAT WILL BE CLOSED FOR MORE THAN FOUR (4) CONSECUTIVE DAYS.

RAMP CLOSURE ADVANCE INFORMATION SIGN

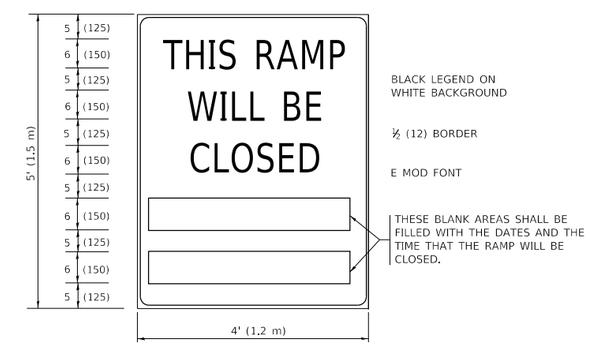

THESE SIGNS ARE REQUIRED ON BOTH SIDES OF THE RAMP, MINIMUM OF 1 WEEK IN ADVANCE OF THE CLOSURE.

THESE SIGNS SHALL BE FABRICATED AND PAID FOR ACCORDING TO THE TEMPORARY INFORMATION SIGNING SPECIAL PROVISION

GENERAL NOTES:

1. CONES MAY BE SUBSTITUTED FOR DRUMS OR TYPE II BARRICADES DURING DAY OPERATIONS. CONES SHALL BE A MINIMUM OF 28 (700) HIGH.
2. VERTICAL BARRICADES SHALL NOT BE USED FOR RAMP CLOSURES.
3. A FLAGGER SHALL BE POSITIONED AT EACH CLOSED RAMP THAT IS OPEN TO CONSTRUCTION VEHICLES, PRECEEDED BY A W20-7 FLAGGER WARNING SIGN.
4. ALL ROUTE MARKERS AND TRAILBLAZER ASSEMBLIES WHICH DIRECT MOTORISTS TO A CLOSED ENTRANCE RAMP SHALL BE COVERED WHEN THE RAMP IS CLOSED FOR MORE THAN FOUR (4) DAYS.
5. THE SIGNING AND BARRICADING WHICH IS REQUIRED BY THIS DETAIL SHALL BE INCLUDED IN THE COST OF TRAFFIC CONTROL AND PROTECTION (EXPRESSWAYS).
6. AUTHORIZATION FROM THE DISTRICT'S BUREAU OF TRAFFIC IS REQUIRED FOR ALL RAMP CLOSURES.
7. THE RAMP CLOSURE ADVANCE INFORMATION SIGNS SHALL BE ERECTED IF THE CLOSURE TIME EXCEEDS TWENTY-FOUR (24) HOURS. ADDITIONAL ADVANCE WARNING SIGNS ON EXIT GUIDE SIGNING WILL BE REQUIRED FOR EXIT RAMP CLOSURES THAT EXCEED FOUR (4) DAYS IN LENGTH
8. ROAD CONSTRUCTION AHEAD SIGNS MAY BE OMITTED WHEN THIS DETAIL IS USED IN CONJUNCTION WITH OTHER TRAFFIC CONTROL THAT ALREADY INCLUDES A ROAD CONSTRUCTION AHEAD SIGN.
9. ARTERIAL ROAD CONSTRUCTION AHEAD SIGNS SHALL BE INSTALLED ON THE LEFT SIDE OF TRAFFIC IF THE MEDIAN IS MORE THAN 10 FT WIDE.

ALL DIMENSIONS ARE IN INCHES (MILLIMETERS) UNLESS OTHERWISE SHOWN.

MODEL: Default
FILE NAME: pw:\\ahnroom.dot.illinois.gov:PWIDOT\Documents\IDOT Offices\District 1\Projects\D132320\CADData\Design\DetSts.dgn

USER NAME = diazia	DESIGNED - D.W.S.	REVISED - S.P.B._01-07	STATE OF ILLINOIS DEPARTMENT OF TRANSPORTATION
	DRAWN -	REVISED - S.P.B._12-09	
PLOT SCALE = 100.0000 ' / in.	CHECKED -	REVISED - M.D._06-13	
PLOT DATE = 12/5/2019	DATE - 02-83	REVISED - M.D._01-18	

ENTRANCE_AND_EXIT_RAMP CLOSURE_DETAILS

SCALE: NONE | SHEET 1 OF 1 SHEETS | STA. TO STA.

F.A. RTE.	SECTION	COUNTY	TOTAL SHEETS	SHEET NO.
VAR.	2019-155-BR	VARIOUS	107	102
	TC-08	CONTRACT NO. 62K32		
		ILLINOIS	FED. AID PROJECT	

SINGLE LANE WEAVE

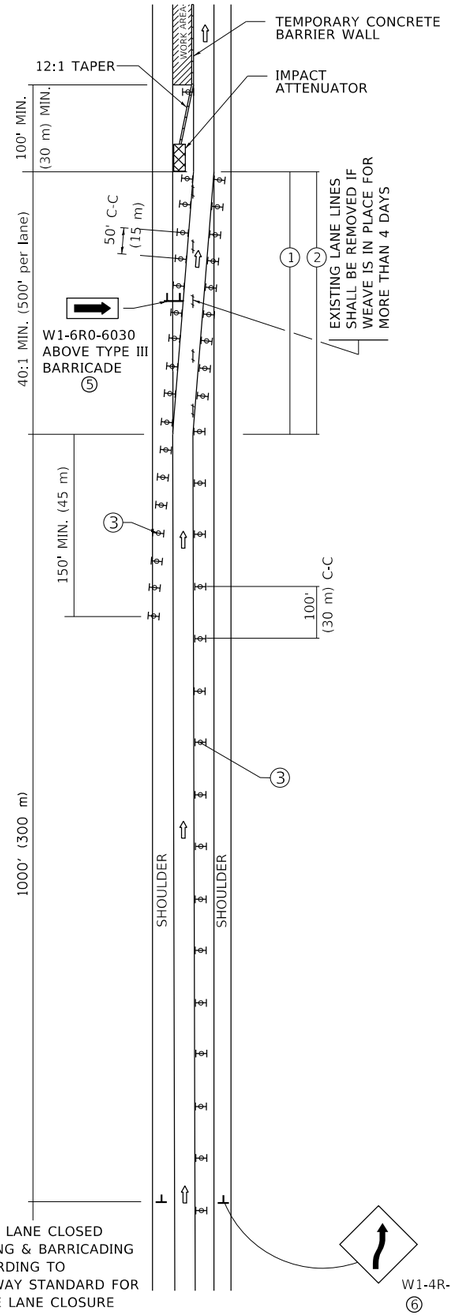

MULTI–LANE WEAVE

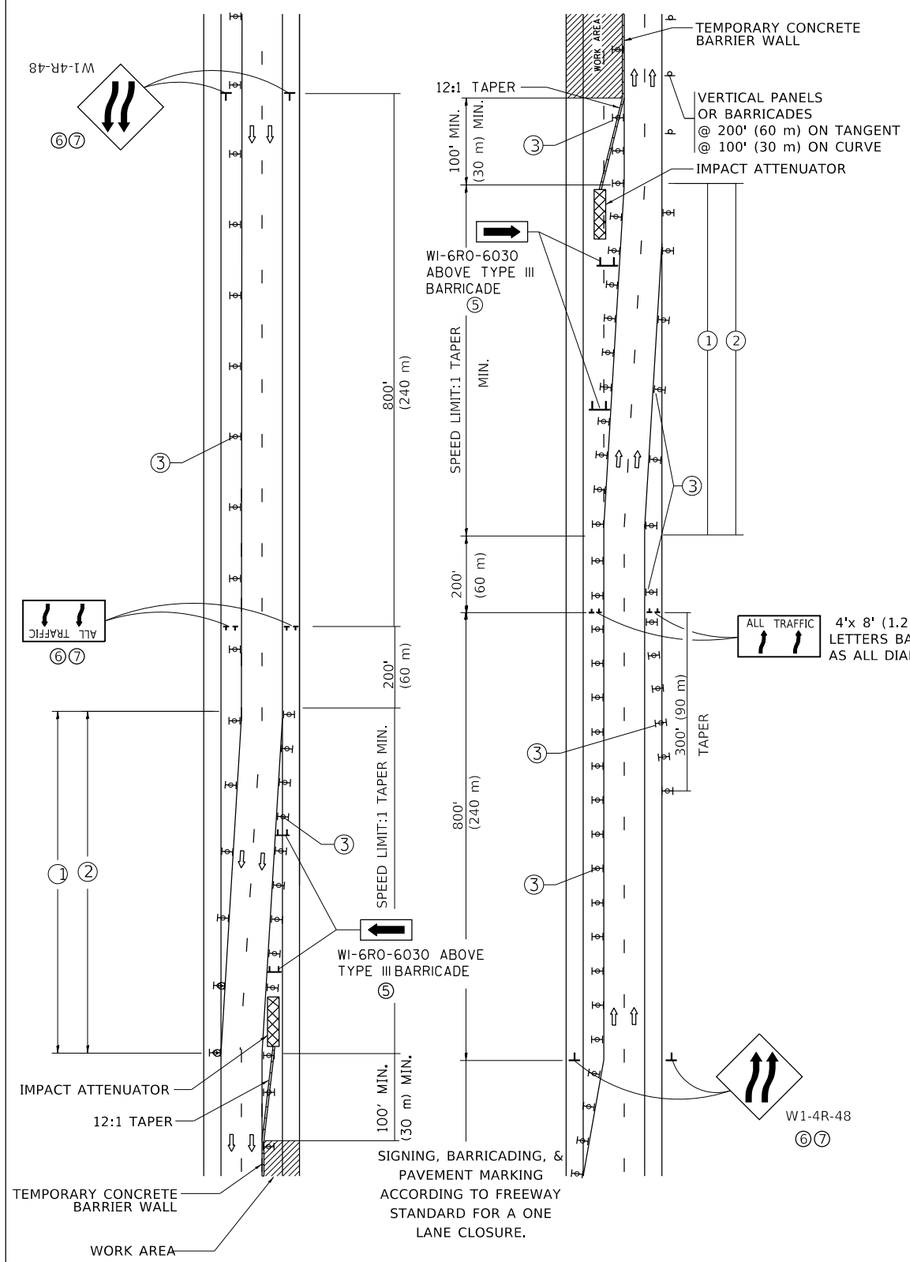

GENERAL NOTES:

1. EXISTING CONFLICTING PAVEMENT MARKING LINES SHALL BE REMOVED. PAVEMENT MARKING REMOVAL SHALL NOT BE REQUIRED FOR SINGLE LANE WEAVES UNDER 4 DAYS IN DURATION.
2. CONTINOUS REFLECTIVE TEMPORARY PAVEMENT MARKING TAPE SHALL BE PLACED THROUGHOUT THE TAPER AND FOR 300' (90 m) ALONG SIDE THE WORK AREA WHERE THE CLOSURE TIME IS GREATER THAN FOURTEEN DAYS. THE LEFT EDGE LINE SHALL BE YELLOW AND THE RIGHT EDGE LINE SHALL BE WHITE. FOR MULTI-LANE WEAVES LANE LINES SHALL BE 5 INCH, 10'-30' (3 m-9 m) SKIP DASH, WHITE.
3. PLASTIC DRUMS WITH STEADY BURN LIGHTS AT 50' (15 m) C-C SPACING IN TAPERS AND 100' (30 m) C-C SPACING IN TANGENTS.
4. ALL SIGNS SHALL BE POST MOUNTED IF THE CLOSURE TIME EXCEEDS FOUR DAYS.
5. TYPE III BARRICADES MAY BE OMMITTED FOR SINGLE-LANE WEAVES UNDER 24-HOURS IN DURATION. W1-6 SIGNS WILL STILL BE REQUIRED. IF THE WIDTH OF OFFSET IS LESS THAN 6' THEN THE TYPE III BARRICADE WITH ATTACHED ARROW SIGN PANEL CAN BE ELIMINATED IN THE TAPER AREAS.
6. WHEN THE LENGTH OF THE SHIFTED SEGMENT (DISTANCE BETWEEN WEAVE POINTS) IS LESS THAN 1500', DOUBLE REVERSE CURVE SIGNS (W24-1) SHOULD BE USED INSTEAD OF THE REVERSE CURVE (W1-4) SIGNS. ARROWS ON THE 4'X8' "ALL TRAFFIC" SIGNS SHALL BE THE SAME SHAPE.
7. THE NUMBER OF ARROWS ON THESE SIGNS SHALL MATCH THE NUMBER OF LANES OPEN TO TRAFFIC.

SYMBOLS

- DIRECTION OF TRAFFIC
- WORK AREA
- SIGN ON PORTABLE OR PERMANENT SUPPORT
- TYPE II BARRICADE OR DRUM WITH MONO-DIRECTIONAL STEADY BURNING LIGHT
- TEMPORARY CONCRETE BARRIER WALL
- IMPACT ATTENUATOR
- W24-1-48

ALL DIMENSIONS ARE IN INCHES (MILLIMETERS) UNLESS OTHERWISE SHOWN

MODEL: Default
FILE NAME: pw:\\planroom.dot.illinois.gov:PWIDOT\Documents\IDOT Offices\District 1\Projects\D132320\CADData\Design\OtherStd.dgn

USER NAME = diazia	DESIGNED - D.W.S.	REVISED - J.A.F. 02-06	
	DRAWN -	REVISED - S.P.B. 01-07	
PLOT SCALE = 100.0000 ' / in.	CHECKED -	REVISED - S.P.B. 12-09	
PLOT DATE = 12/5/2019	DATE - 02-87	REVISED - M.D. 06-13	

STATE OF ILLINOIS
DEPARTMENT OF TRANSPORTATION

TRAFFIC CONTROL DETAILS FOR FREEWAY SINGLE & MULTI–LANE WEAVE

SCALE: NONE | SHEET 1 OF 1 SHEETS | STA. TO STA.

F.A. RTE.	SECTION	COUNTY	TOTAL SHEETS	SHEET NO.
VAR.	2019-155-BR	VARIOUS	107	103
TC-09		CONTRACT NO. 62K32		
		ILLINOIS	FED. AID PROJECT	

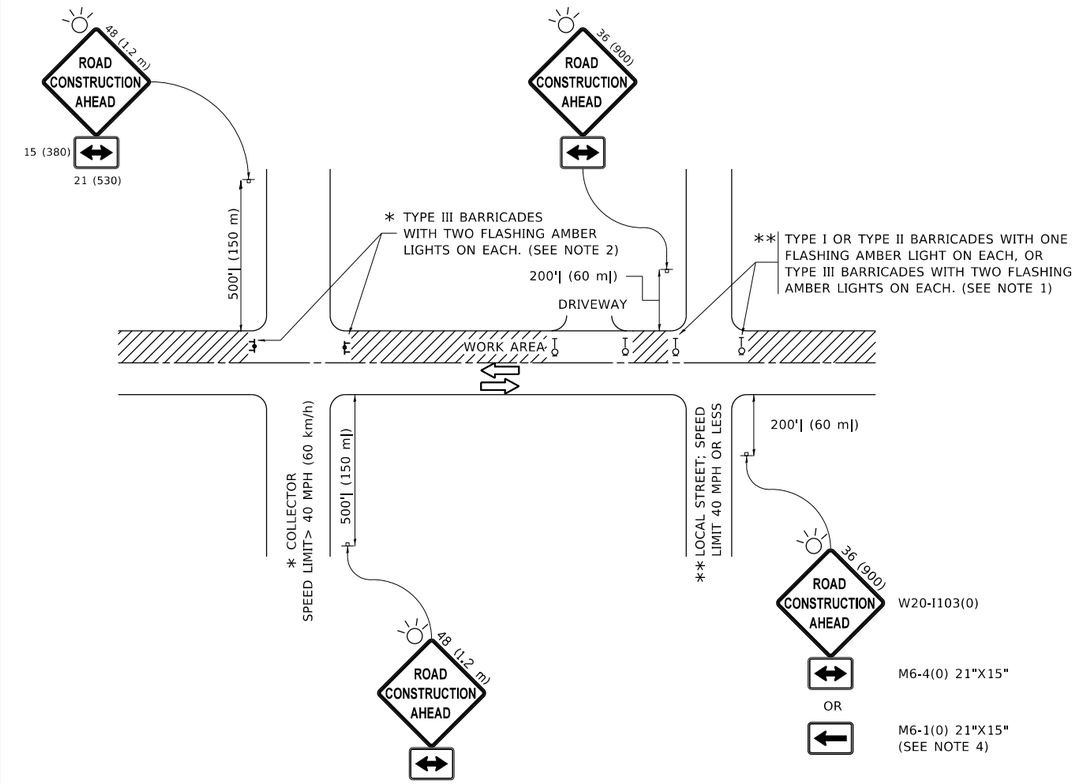

NOTES:

1. SIDE ROAD WITH A SPEED LIMIT OF 40 MPH (60 km/h) OR LESS AS SHOWN ON THE DRAWING AND AS DIRECTED BY THE ENGINEER:

   a) ONE "ROAD CONSTRUCTION AHEAD" SIGN 36 x 36 (900x900) WITH A FLASHER MOUNTED ON IT APPROXIMATELY 200' (60 m) IN ADVANCE OF THE MAIN ROUTE.

   b) THE CLOSED PORTION OF THE MAIN ROUTE SHALL BE PROTECTED BY BLOCKING WITH TYPE I, TYPE II OR TYPE III BARRICADES, 1/3 OF THE CROSS SECTION OF THE CLOSED PORTION.

2. SIDE ROAD WITH A SPEED LIMIT GREATER THAN 40 MPH (60 km/h) AS SHOWN ON THE DRAWING AND AS DIRECTED BY THE ENGINEER:

   a) ONE "ROAD CONSTRUCTION AHEAD" SIGN 48 x 48 (1.2 m x 1.2 m) WITH A FLASHER MOUNTED ON IT APPROXIMATELY 500' (150 m) IN ADVANCE OF THE MAIN ROUTE.

   b) THE CLOSED PORTION OF THE MAIN ROUTE SHALL BE PROTECTED BY BLOCKING WITH TYPE III BARRICADES, 1/2 OF THE CROSS SECTION OF THE CLOSED PORTION.

3. CONES MAY BE SUBSTITUTED FOR BARRICADES OR DRUMS AT HALF THE SPACING DURING DAY OPERATIONS. CONES SHALL BE A MINIMUM OF 28 (710) IN HEIGHT.

4. WHEN THE SIDE ROAD LIES BETWEEN THE BEGINNING OF THE MAINLINE SIGNING AND THE WORK ZONE, A SINGLE HEADED ARROW (M6-1) SHALL BE USED IN LIEU OF THE DOUBLE HEADED ARROW (M6-4).

5. WHEN WORK IS BEING PERFORMED ON A SIDE ROAD OR DRIVEWAY, FOLLOW THE APPLICABLE STANDARD(S). THE DIRECTIONAL ARROW (M6-1 OR M6-4) SHALL BE COVERED OR REMOVED WHEN NO LONGER CONSISTENT WITH THE TRAFFIC CONTROL SET-UP.

6. ADVANCE WARNING SIGNS ARE TO BE OMITTED ON DRIVEWAYS UNLESS OTHERWISE SPECIFIED IN THE PLANS OR BY THE ENGINEER.

7. THE TRAFFIC CONTROL AND PROTECTION FOR SIDE ROADS, INTERSECTIONS, AND DRIVEWAYS SHALL BE INCLUDED IN THE COST OF SPECIFIED TRAFFIC CONTROL STANDARDS OR ITEMS.

All dimensions are in inches (millimeters) unless otherwise shown.

MODEL: Default
FILE NAME: pw:\\ubanroom.dot.illinois.gov:PWIDOT\Documents\IDOT Offices\District 1\Projects\D132320\CADData\Design\IbrSt2.dgn

USER NAME = diazia	DESIGNED - L.H.A.	REVISED - A. HOUSEH 10-15-96	STATE OF ILLINOIS DEPARTMENT OF TRANSPORTATION
	DRAWN -	REVISED - T. RAMMACHER 01-06-00	
PLOT SCALE = 100.0000 ' / in.	CHECKED -	REVISED - A. SCHUETZE 07-01-13	
PLOT DATE = 12/5/2019	DATE - 06-89	REVISED - A. SCHUETZE 09-15-16	

TRAFFIC CONTROL AND PROTECTION FOR SIDE ROADS, INTERSECTIONS, AND DRIVEWAYS

SCALE: NONE | SHEET 1 OF 1 SHEETS | STA. TO STA.

F.A. RTE.	SECTION	COUNTY	TOTAL SHEETS	SHEET NO.
VAR.	2019-155-BR	VARIOUS	107	104
	TC-10	CONTRACT NO. 62K32		
	ILLINOIS	FED. AID PROJECT		

TURN BAY ENTRANCE AT START OF LANE CLOSURE TAPER

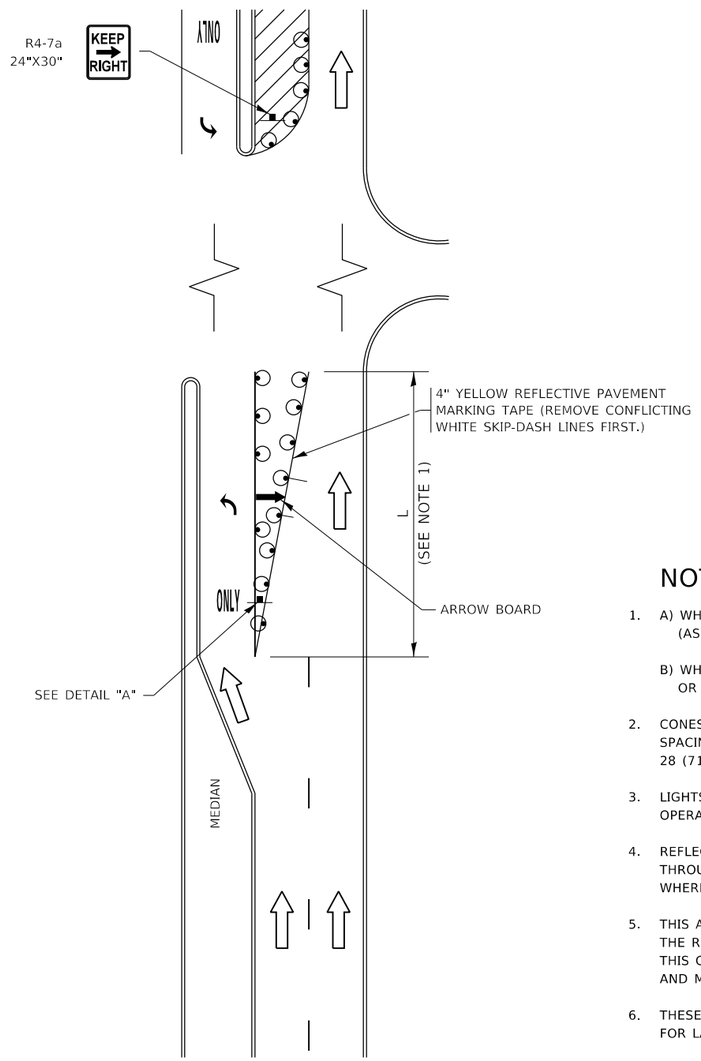

FIGURE 1

LEGEND

- WORK AREA
- LANE OPEN TO TRAFFIC
- ARROW BOARD
- TYPE I OR II BARRICADE OR DRUM WITH STEADY BURN LIGHT
- DRUM WITH STEADY BURN LIGHT
- SIGN ASSEMBLY
- TYPE I OR II CHECK BARRICADE WITH FLASHING LIGHT

NOTES:

1. A) WHEN "L" IS ≤ THE STORAGE LENGTH OF THE TURN LANE (AS SHOWN IN FIG. 1), USE FIGURE 1.

   B) WHEN "L" IS > THE STORAGE LENGTH OF THE TURN LANE OR THE TURN LANE IS WITHIN THE LANE CLOSURE, USE FIGURE 2.

2. CONES MAY BE SUBSTITUTED FOR BARRICADES OR DRUMS AT HALF THE SPACING DURING DAY OPERATIONS. CONES SHALL BE A MINIMUM OF 28 (710) IN HEIGHT.

3. LIGHTS WILL NOT BE REQUIRED ON BARRICADES OR DRUMS FOR DAY OPERATIONS. ALL LIGHTS SHALL BE MONODIRECTIONAL.

4. REFLECTIVE TEMPORARY PAVEMENT MARKINGS SHALL BE PLACED THROUGHOUT THE BARRICADED AREAS OF EACH TURN BAY AS SHOWN WHERE THE CLOSURE TIME IS GREATER THAN FOURTEEN (14) DAYS.

5. THIS APPLICATION ALSO APPLIES WHEN WORK IS BEING PERFORMED IN THE RIGHT LANE(S) AND THE RIGHT TURN BAY IS TO REMAIN OPEN. UNDER THIS CONDITION, "RIGHT TURN LANE" R3-I100R 24 x 24 (600 x 600) AND M6-2R 21 x 15 (530 x 380) SHALL BE USED.

6. THESE CONTROLS SHALL SUPPLEMENT MAINLINE TRAFFIC CONTROL FOR LANE CLOSURES.

7. THE SIGNS SHALL BE MOUNTED ABOVE THE BARRICADES/DRUMS ON SEPARATE SIGN SUPPORTS THAT MEET NCHRP 350 OR MASH PREQUIREMENTS.

8. TRAFFIC CONTROL AND PROTECTION AT TURN BAYS (TO REMAIN OPEN TO TRAFFIC) SHALL BE INCLUDED IN THE COST OF SPECIFIED TRAFFIC CONTROL STANDARDS OR ITEMS.

TURN BAY ENTRANCE WITHIN A LANE CLOSURE

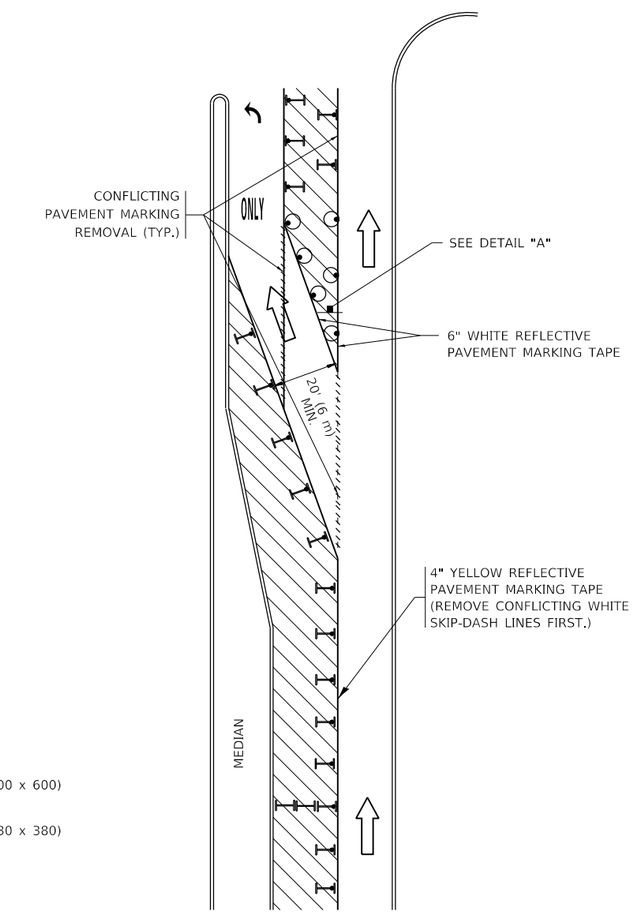

FIGURE 2

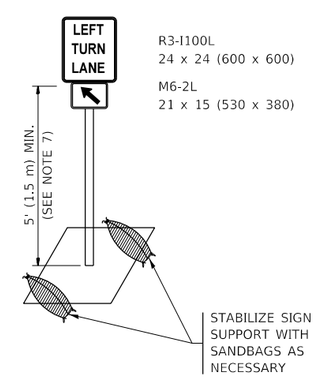

DETAIL A

All dimensions are in inches (millimeters) unless otherwise shown.

MODEL: Default
FILE NAME: pw:\\planroom.dot.illinois.gov:PWIDOT\Documents\IDOT Offices\District 1\Projects\D132320\CADData\Design\Dist5Std.dgn

USER NAME = diazia	DESIGNED - T. RAMMACHER 09-08-94	REVISED - R. BORO 09-14-09	STATE OF ILLINOIS DEPARTMENT OF TRANSPORTATION
	DRAWN - A. HOUSEH 11-07-95	REVISED - A. SCHUETZE 07-01-13	
PLOT SCALE = 100.0000 ' / in.	CHECKED - A. HOUSEH 10-12-96	REVISED - A. SCHUETZE 09-15-16	
PLOT DATE = 12/5/2019	DATE - T. RAMMACHER 01-06-00	REVISED -	

TRAFFIC CONTROL AND PROTECTION AT TURN BAYS (TO REMAIN OPEN TO TRAFFIC)

SCALE: NONE | SHEET 1 OF 1 SHEETS | STA. TO STA.

F.A. RTE.	SECTION	COUNTY	TOTAL SHEETS	SHEET NO.
VAR.	2019-155-BR	VARIOUS	107	105
	TC-14	CONTRACT NO. 62K32		
	ILLINOIS	FED. AID PROJECT		

PARTIAL RAMP CLOSURE DETAILS

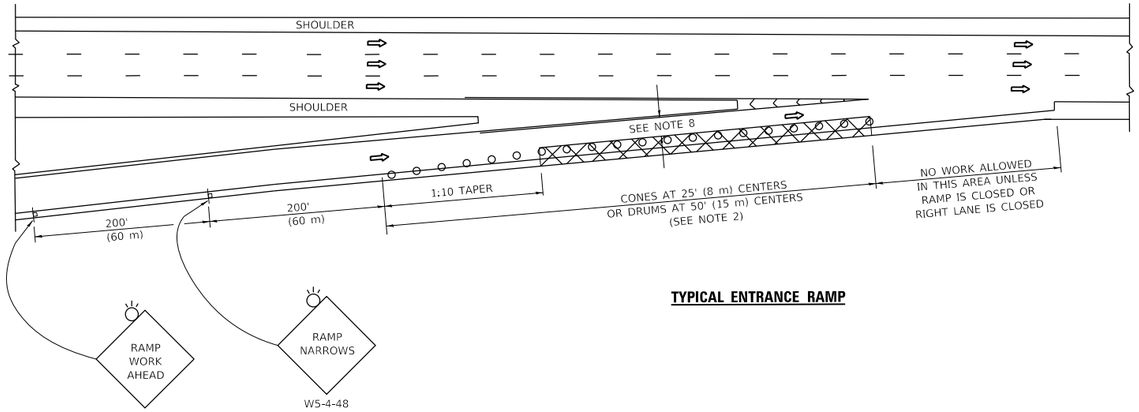

TYPICAL ENTRANCE RAMP

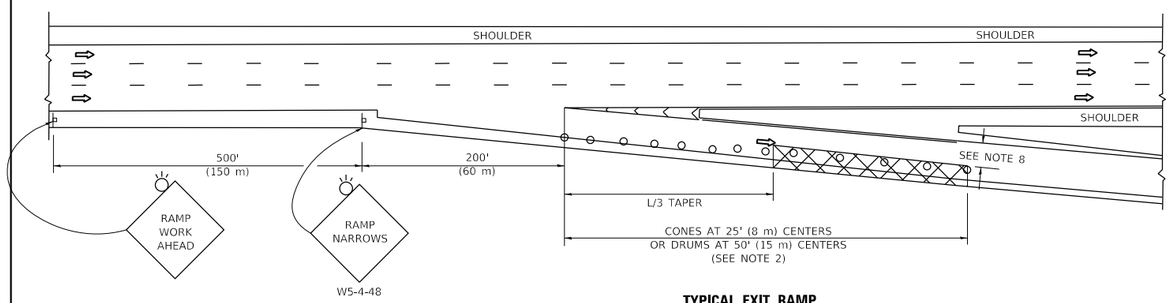

TYPICAL EXIT RAMP

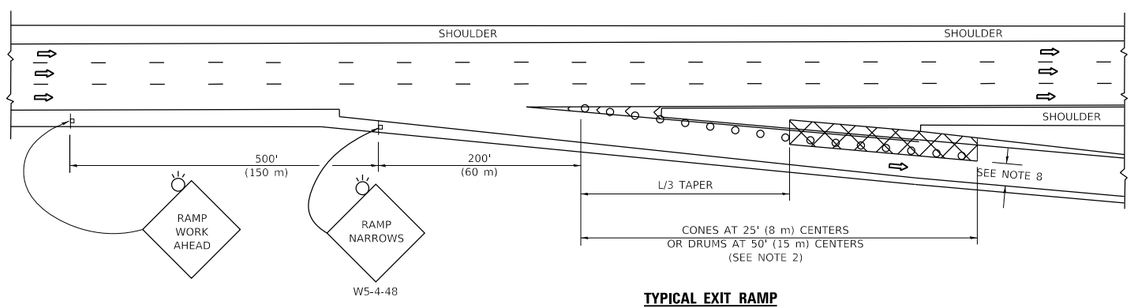

TYPICAL EXIT RAMP

SHOULDER CLOSURE DETAILS

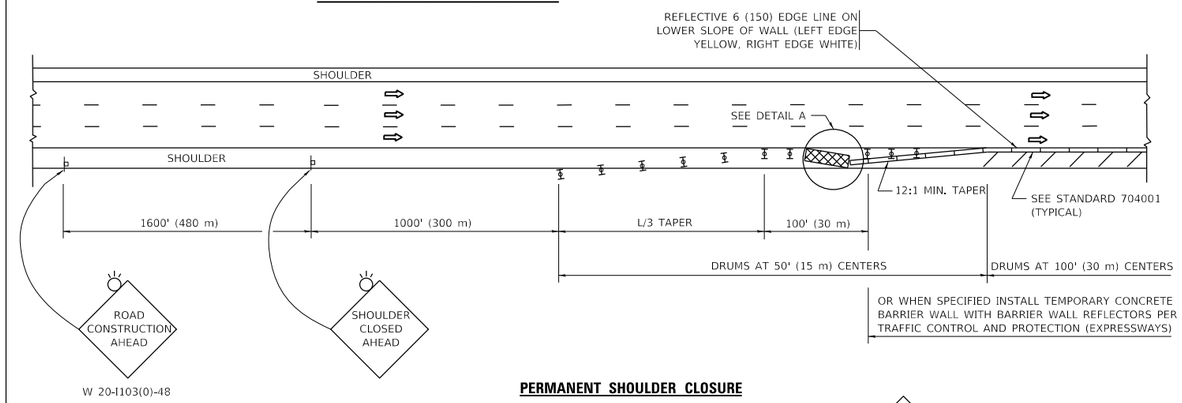

PERMANENT SHOULDER CLOSURE

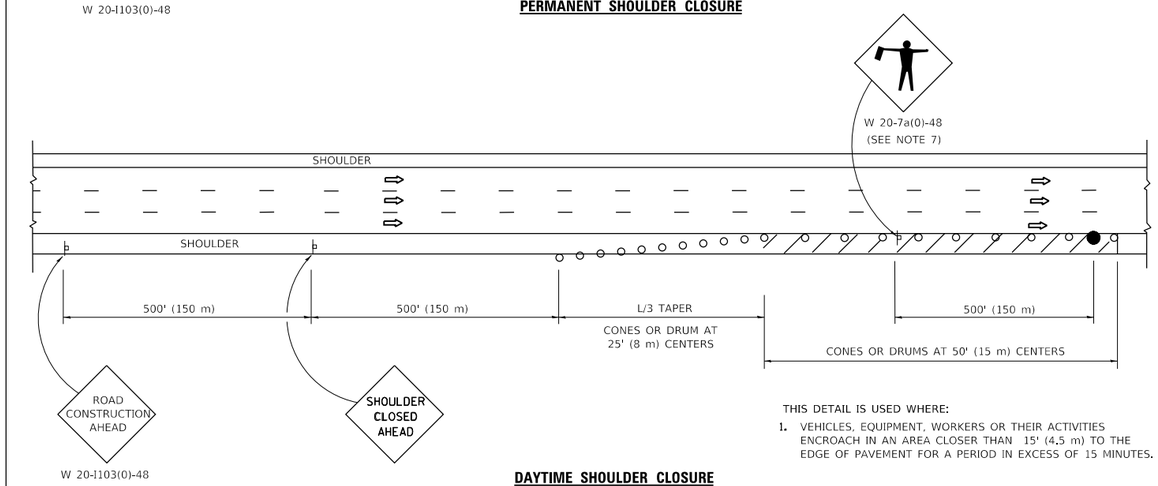

DAYTIME SHOULDER CLOSURE

THIS DETAIL IS USED WHERE:

1. VEHICLES, EQUIPMENT, WORKERS OR THEIR ACTIVITIES ENCROACH IN AN AREA CLOSER THAN 15' (4.5 m) TO THE EDGE OF PAVEMENT FOR A PERIOD IN EXCESS OF 15 MINUTES.

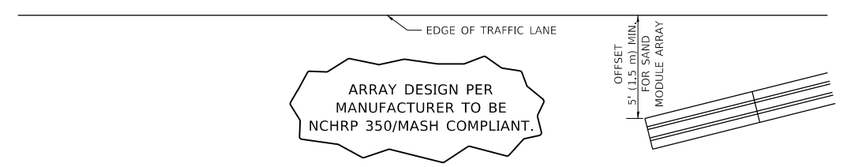

DETAIL "A"
IMPACT ATTENTUATOR, TEMPORARY
(SEE NOTE 5)

SYMBOLS

- ACTIVE WORK AREA
- SIGN ON PORTABLE OR PERMANENT SUPPORT
- FLAGGER WITH CONTROL SIGN
- TYPE II BARRICADE OR DRUM
- CONE, DRUM OR BARRICADE
- IMPACT ATTENUATOR OF TYPE AND TEST LEVEL SPECIFIED

GENERAL NOTES:

1. THE "L" DISTANCE EQUALS:

SPEED LIMIT	FORMULAS	
45 mph (80 km/h) OR GREATER:	METRIC	ENGLISH
	L=0.65(W)(S)	L=(W)(S)

W = WIDTH OF OFFSET IN FEET (METERS)
S = NORMAL POSTED SPEED MPH (KM/H)

2. TYPE II BARRICADES OR DRUMS ARE REQUIRED FOR ALL NIGHTTIME CLOSURES. TYPE II BARRICADES OR DRUMS WITH MONODIRECTIONAL STEADY BURN LIGHTS ARE REQUIRED FOR DELINEATING OBSTICLES, EXCAVATIONS, OR HAZARDS EXCEEDING 100 FT (30m) IN LENGTH AT NIGHT.
3. ALL SIGNS SHALL BE POST MOUNTED IF THE CLOSURE TIME EXCEEDS FOUR DAYS.
4. FLASHING LIGHTS SHALL BE USED DURING THE HOURS OF DARKNESS AND SHALL BE INSTALLED ABOVE THE FIRST TWO SETS OF SIGNS.
5. THE IMPACT ATTENTUATOR, TEMPORARY IS NOT REQUIRED WHEN THE TEMPORARY CONCRETE BARRIER WALL IS PROTECTED BY OR IS TIED INTO THE EXISTING GUARDRAIL. IF OFFSET IS LESS THAN 5 FEET USE NARROW USE TYPE DEVICE TO MEET NCHRP350/MASH.
6. AUTHORIZATION FROM THE DISTRICT'S BUREAU OF TRAFFIC IS REQUIRED FOR ALL FREEWAY CLOSURES.
7. THE FLAGGER AND FLAGGER SIGN ARE REQUIRED AT THE ABOVE WORK SITES WHEN:
   a. FOUR OR MORE WORK VEHICLES ENTER THE TRAFFIC LANES IN A ONE HOUR PERIOD.
   b. THE WORK AVTIVITY REQUIRES FREQUENT ENCROACHMENT INTO THE LANE OPEN TO TRAFFIC.

   THE FLAGGER SHALL BE STATIONED APPROXIMATELY 100' (30 m) TO 200' (60 m) IN ADVANCE OF THE WORKERS.
8. 12' MIN. WIDTH TANGENT SECTION
   16' MIN. WIDTH CURVE SECTION.

ALL DIMENSIONS ARE IN INCHES (MILLIMETERS) UNLESS OTHERWISE SHOWN.

MODEL: Default
FILE NAME: pw:\\ulanroom.dot.illinois.gov:PWIDOT\Documents\IDOT Offices\District 1\Projects\D132320\CADdata\Design\Dist50.dgn

USER NAME = diazia	DESIGNED -	REVISED -	S.P.B. 01-07	STATE OF ILLINOIS DEPARTMENT OF TRANSPORTATION
	DRAWN - D.W.S.	REVISED -	S.P.B. 12-09	
PLOT SCALE = 100.0000 ' / in.	CHECKED -	REVISED -	M.D. 06-13	
PLOT DATE = 12/5/2019	DATE - 11-96	REVISED -	M.D. 01-18	

TRAFFIC CONTROL DETAILS FOR FREEWAY SHOULDER CLOSURES AND PARTIAL RAMP CLOSURES

SCALE: NONE | SHEET 1 OF 1 SHEETS | STA. TO STA.

F.A. RTE.	SECTION	COUNTY	TOTAL SHEETS	SHEET NO.
VAR.	2019-155-BR	VARIOUS	107	106
	TC-17	CONTRACT NO. 62K32		
		ILLINOIS	FED. AID PROJECT	

SIGNING FOR FLAGGING OPERATIONS AT WORK ZONE OPENINGS

WORK ZONE EXIT OPENING

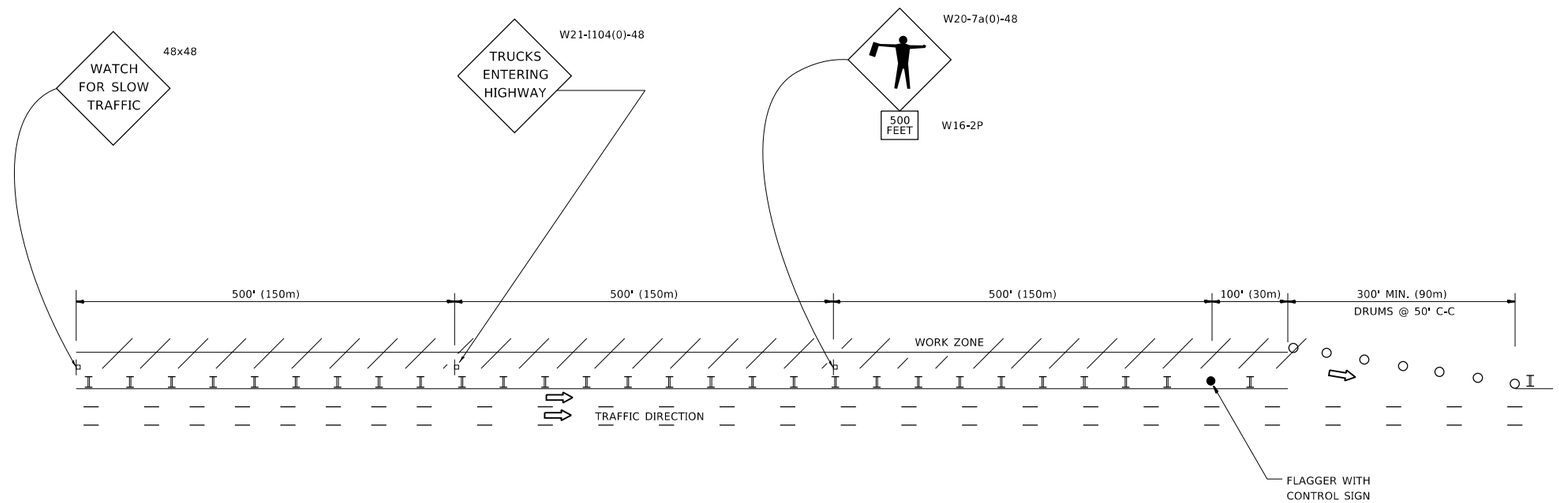

WORK ZONE ENTRY OPENING

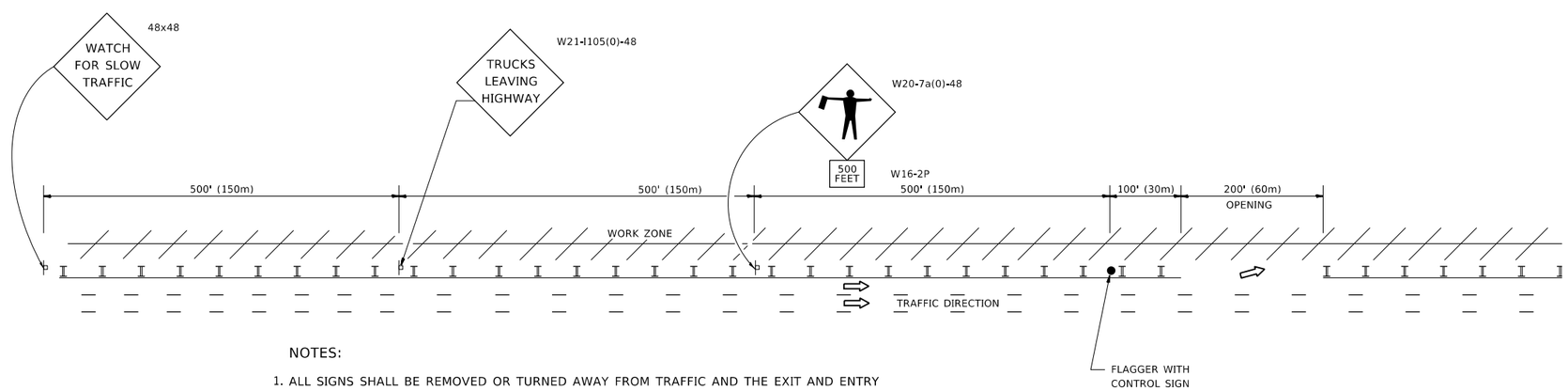

NOTES:

1. ALL SIGNS SHALL BE REMOVED OR TURNED AWAY FROM TRAFFIC AND THE EXIT AND ENTRY OPENINGS SHALL BE CLOSED WHEN THE FLAGGING OPERATION CEASES. NON OPERATING EQUIPMENT SHALL COMPLY WITH ARTICLE 701.11
2. WORK ZONE OPENINGS SHALL BE A MINIMUM OF ONE HALF MILE APART AND A MINIMUM OF ONE QUARTER MILE FROM ALL ENTRANCE AND EXIT RAMPS.
3. EXITING THE WORK ZONE AT ANY PLACE OTHER THAN AT A WORK ZONE EXIT OPENING WILL BE PROHIBITED.
4. ALL VEHICLES SHALL ENTER THE WORK ZONE AT ENTRY OPENINGS, USING THEIR TURN SIGNALS TO WARN MOTORISTS
5. FLAGGERS SHALL NOT STOP TRAFFIC OR DIRECT TRAFFIC INTO AN ADJACENT LANE.

ALL DIMENSIONS ARE IN INCHES (MILLIMETERS) UNLESS OTHERWISE SHOWN

USER NAME = diazia	DESIGNED -	REVISED - J.A.F. 02-06	STATE OF ILLINOIS DEPARTMENT OF TRANSPORTATION	FREEWAY /EXPRESSWAY SIGNING FOR FLAGGING OPERATIONS AT WORK ZONE OPENINGS ON FREEWAYS /EXPRESSWAYS	
	DRAWN -	REVISED - S.P.B. 01-07			
PLOT SCALE = 100.0000 ' / in.	CHECKED -	REVISED - S.P.B. 12-09			
PLOT DATE = 12/5/2019	DATE -	REVISED - M.D.06-13		SCALE: NONE SHEET 1 OF 1 SHEETS STA. TO STA.	

F.A. RTE.	SECTION	COUNTY	TOTAL SHEETS	SHEET NO.
VAR.	2019-155-BR	VARIOUS	107	107
TC–18		CONTRACT NO. 62K32		
		ILLINOIS FED. AID PROJECT		

MODEL: Default
FILE NAME: pw:\\dbarroom.dot.illinois.gov:PWIDOT\Documents\IDOT Offices\District 1\Projects\D132320\CADData\Design\Dist50.dgn