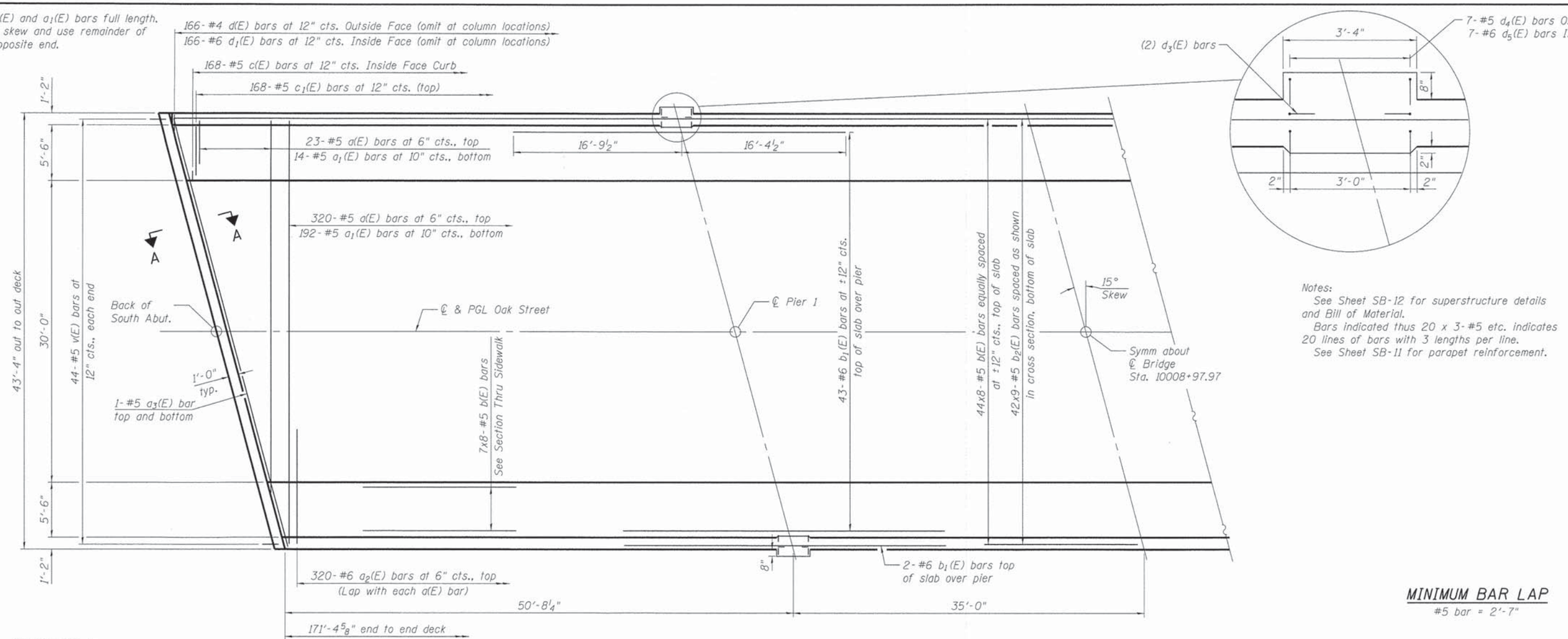

MINIMUM BAR LAP

#5 bar = 2'-7"

COMPANY NAME: HR GREEN
PROJECT CONTACT: T. SCOTT CREECH, P.E.
CLIENT: VILLAGE OF HINSDALE
DATE PLOTTED: 12/15/2014 1:52:33 PM
FILE NAME: D32_STR_SB_Super.dgn
PLOT SCALE: 24" x 36"
PEN TABLE: standard-trans.tbl

HRGreen.com
Illinois Professional Design Firm # 184-001322

USER NAME = whood	DESIGNED - JMW	REVISED -	
	CHECKED - RDG	REVISED -	
PLOT SCALE =	DRAWN - WJH	REVISED -	
PLOT DATE = 12/15/2014	CHECKED - 12/15/14	REVISED -	

STATE OF ILLINOIS
DEPARTMENT OF TRANSPORTATION

SUPERSTRUCTURE DETAILS
STRUCTURE NO. 022-6404

SHEET NO. SB-10 OF SB-29 SHEETS

F.A.U. RTE.	SECTION	COUNTY	TOTAL SHEETS	SHEET NO.
2999	10-00089-00-BR	DUPAGE	157	101
		CONTRACT NO. 61B11		
	ILLINOIS	FED. AID PROJECT	BRM-9003(699)	

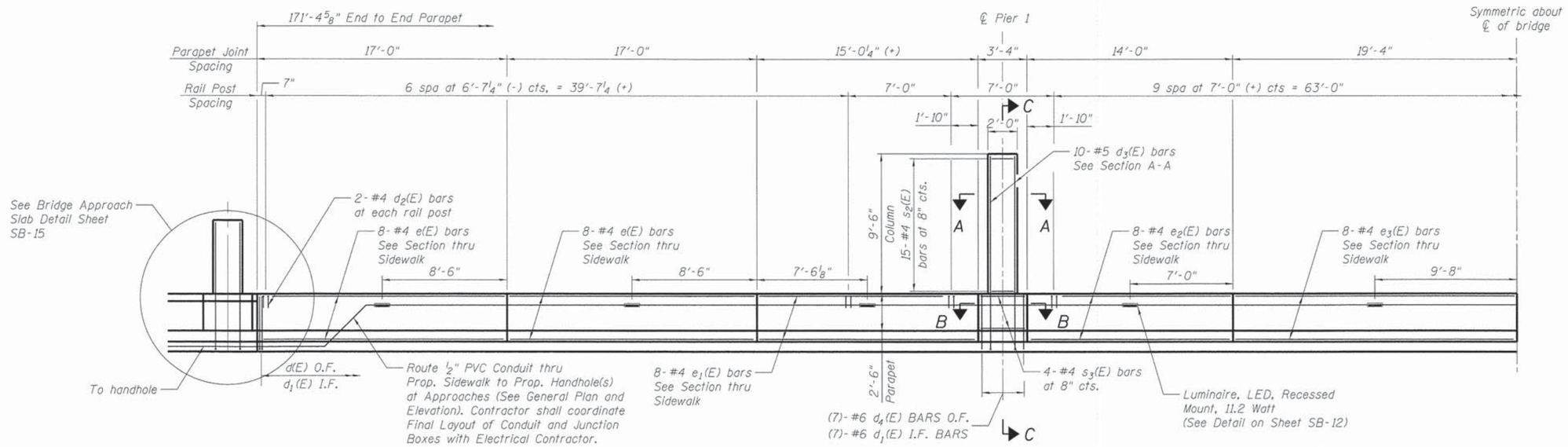

INSIDE ELEVATION OF PARAPET

O.F. = Outside Face
I.F. = Inside Face

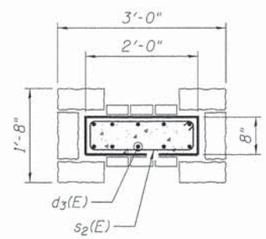

SECTION A-A

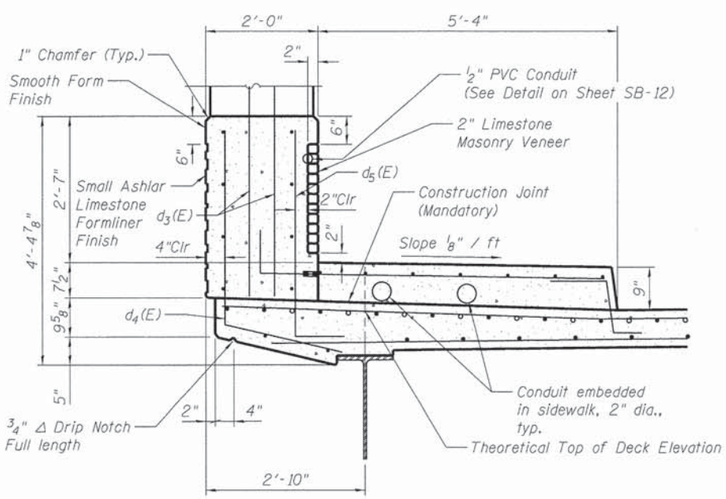

SECTION C-C

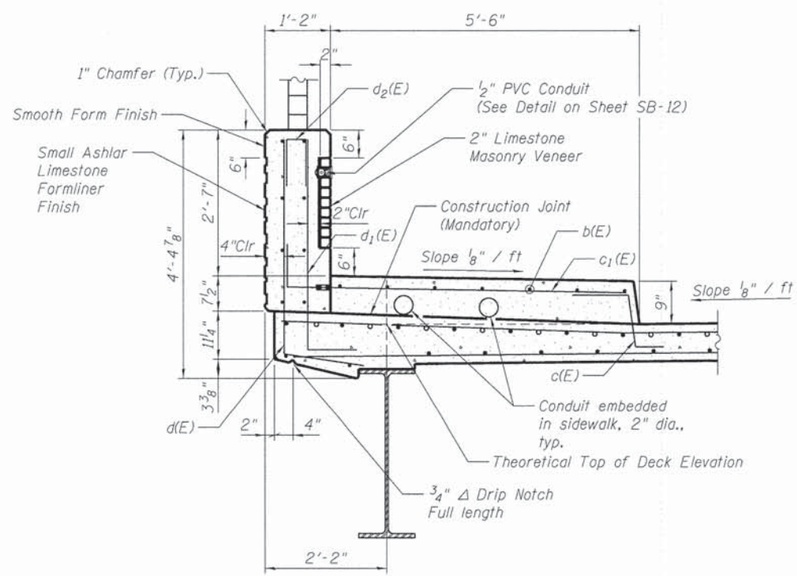

SECTION THRU SIDEWALK

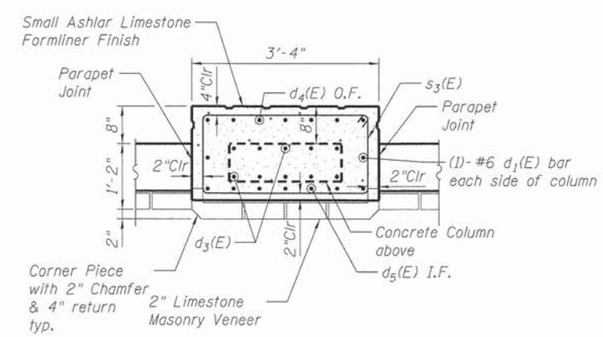

SECTION B-B

COMPANY NAME: HR GREEN
PROJECT CONTACT: T. SCOTT CREECH, P.E.
CLIENT: VILLAGE OF HINSDALE
DATE PLOTTED: 12/15/2014 1:52:36 PM
PLOT SCALE: 0.012 PTS.:30.:super-detail01.dgn
PLOT DRIVER: pdf.pltr
PEN TABLE: standard-trans.tbl

HRGreen.com Illinois Professional Design Firm # 184-001322	USER NAME = whood	DESIGNED - JMW	REVISED -	STATE OF ILLINOIS DEPARTMENT OF TRANSPORTATION	SUPERSTRUCTURE DETAILS STRUCTURE NO. 022-6404	F.A.U. RTE.	SECTION	COUNTY	TOTAL SHEETS / SHEET NO.
HRGreen		CHECKED - RDG	REVISED -			2999	10-00089-00-BR	DUPAGE	157 / 102
	PLOT SCALE =	DRAWN - WJH	REVISED -					CONTRACT NO. 61B11	
	PLOT DATE = 12/15/2014	CHECKED - 12/15/14	REVISED -		SHEET NO. SB-11 OF SB-29 SHEETS			ILLINOIS FED. AID PROJECT BRM-9003(699)	

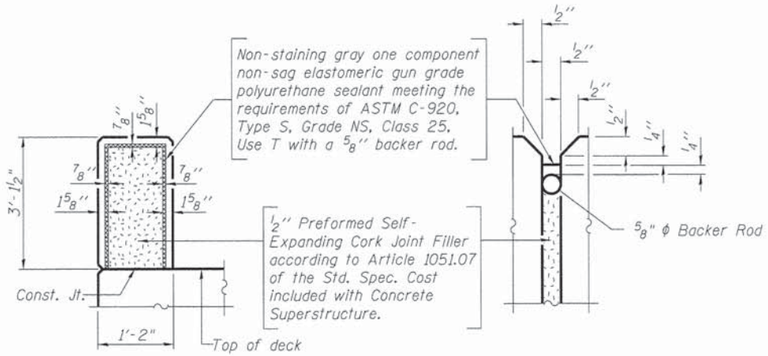

PARAPET JOINT DETAILS

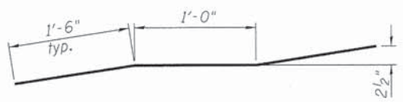

BAR m3(E)

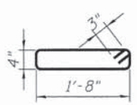

BAR s2(E)

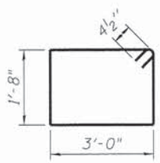

BAR s3(E)

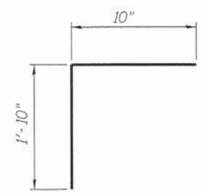

BAR v(E)

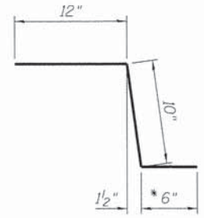

BAR c(E)

* In lieu of bottom leg, c(E) bars may be cored and set according to Article 509.06 of the Standard Specifications. Cored holes shall be roughned or scored per manufacturer's recommendations. Maximum depth of cored hole shall not exceed 6".

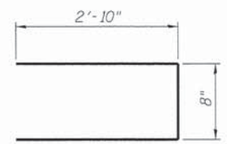

BAR s(E)

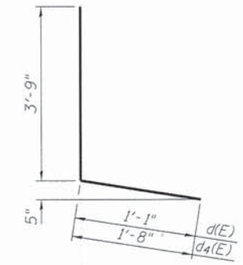

BAR d(E) AND d4(e)

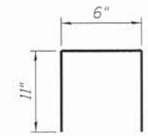

BAR d2(E)

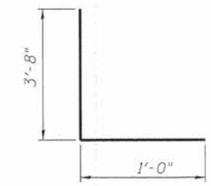

BAR d1(E)

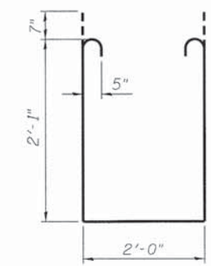

BAR s1(E)

SUPERSTRUCTURE BILL OF MATERIAL

Bar	No.	Size	Length	Shape
a (E)	343	#5	42'- 8"	
a1(E)	206	#5	40'- 0"	
a2(E)	640	#6	6'- 6"	
a3(E)	4	#5	44'- 10"	
b (E)	464	#5	23'- 8"	
b1(E)	94	#6	33'- 2"	
b2(E)	378	#5	21'- 4"	
c (E)	336	#5	2'- 5"	
c1(E)	336	#5	6'- 4"	
d (E)	332	#4	4'- 10"	
d1(E)	368	#6	4'- 8"	
d2(E)	104	#4	2'- 4"	
d3(E)	40	#5	12'- 0"	
d4(E)	28	#6	4'- 8"	
e (E)	64	#4	16'- 8"	
e1(E)	32	#4	14'- 8"	
e2(E)	32	#4	13'- 8"	
e3(E)	32	#4	19'- 0"	
m (E)	12	#6	24'- 3"	
m1(E)	24	#6	6'- 2"	
m2(E)	8	#6	1'- 10"	
m3(E)	28	#5	4'- 0"	
s (E)	84	#5	6'- 4"	
s1(E)	84	#5	7'- 4"	
s2(E)	60	#4	4'- 6"	
s3(E)	16	#4	10'- 1"	
v(E)	88	#5	2'- 8"	
Concrete Superstructure			Cu. Yd.	325.5
Bridge Deck Grooving			Sq. Yd.	572
Protective Coat			Sq. Yd.	921
Reinforcement Bars, Epoxy Coated			Pound	66,670
Bar Splicers			Each	336

Bars indicated thus 1 x 2-#5 etc. indicates 1 line of bars with 2 lengths per line.

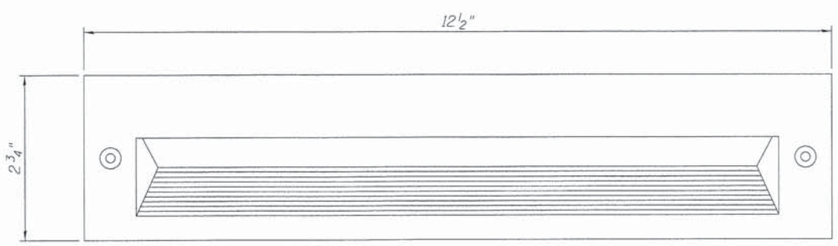

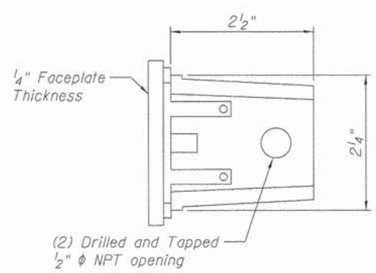

LUMINAIRE DETAIL

BEGA Recessed Wall Luminaire # 2384LED
Paid for as Luminaire, LED, Recessed Mount, 11.2 Watt

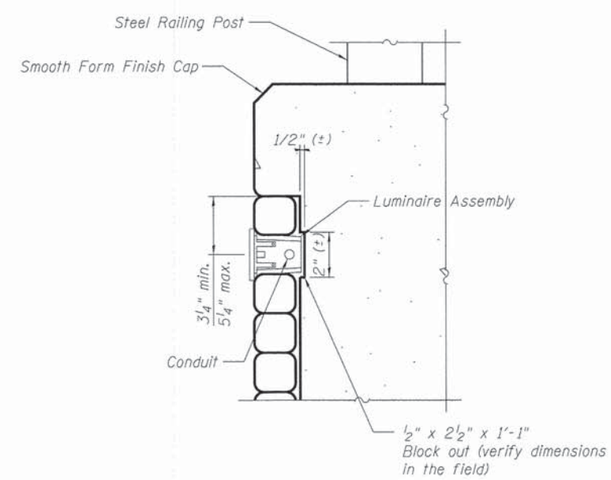

COMPANY NAME: HR GREEN
PROJECT CONTACT: T. SCOTT CREECH, P.E.
CLIENT: VILLAGE OF HINSDALE
DATE PLOTTED: 12/15/2014 1:50:39 PM
FILE NAME: 022_STR_SB_Super-Detail02.dgn
PLOT DRIVER: pdf.pltr
PEN TABLES: standard-trans.tbl

HRGreen.com
Illinois Professional Design Firm # 184-001322

USER NAME = whood	DESIGNED - JMW	REVISED -	
	CHECKED - RDG	REVISED -	
PLOT SCALE =	DRAWN - WJH	REVISED -	
PLOT DATE = 12/15/2014	CHECKED - 12/15/14	REVISED -	

STATE OF ILLINOIS
DEPARTMENT OF TRANSPORTATION

SUPERSTRUCTURE DETAILS
STRUCTURE NO. 022-6404

SHEET NO. SB-12 OF SB-29 SHEETS

F.A.U. RTE.	SECTION	COUNTY	TOTAL SHEETS	SHEET NO.
2999	10-00089-00-BR	DUPAGE	157	103
		CONTRACT NO. 61B11		
	ILLINOIS	FED. AID PROJECT	BRM-9003(699)	

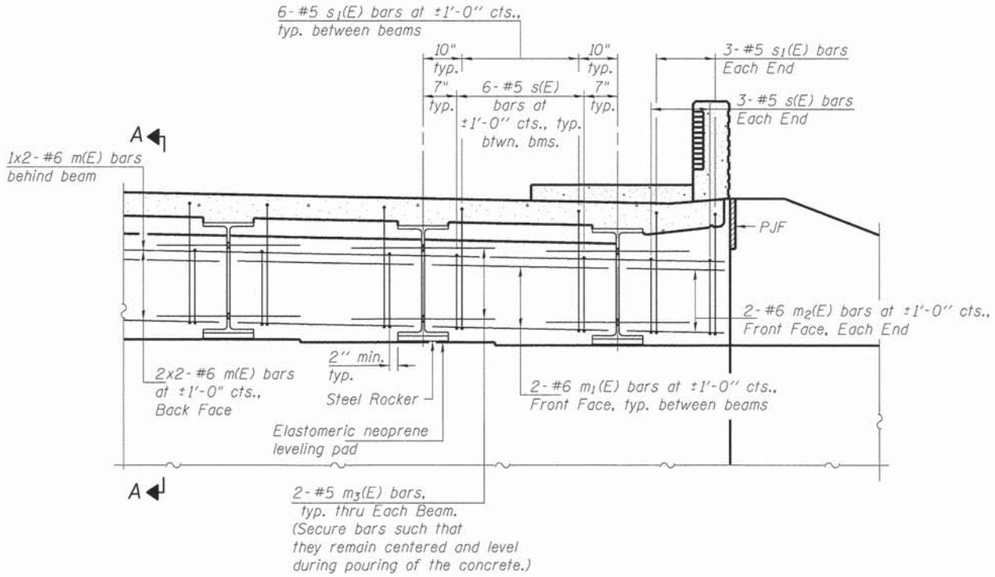

DIAPHRAGM ELEVATION AT ABUTMENT

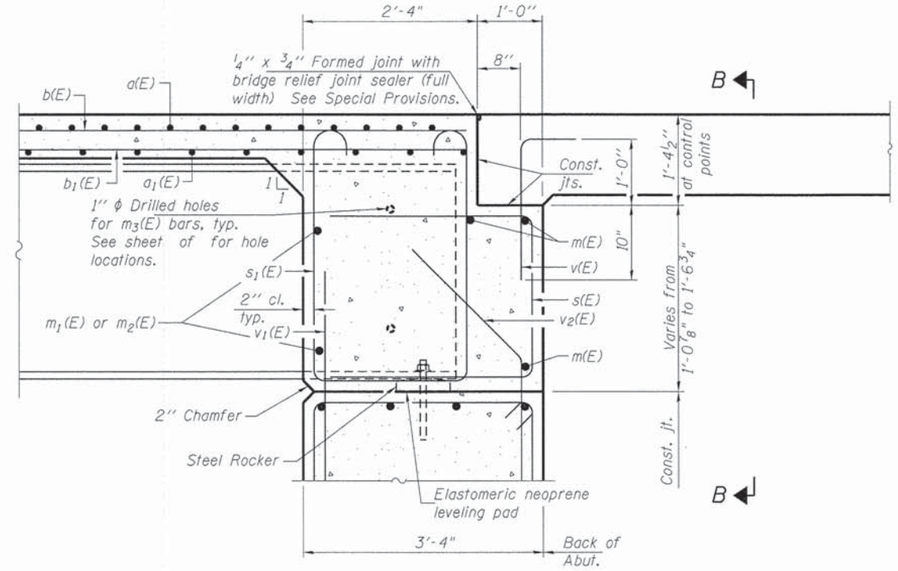

SECTION A-A

(at Rt. L's)

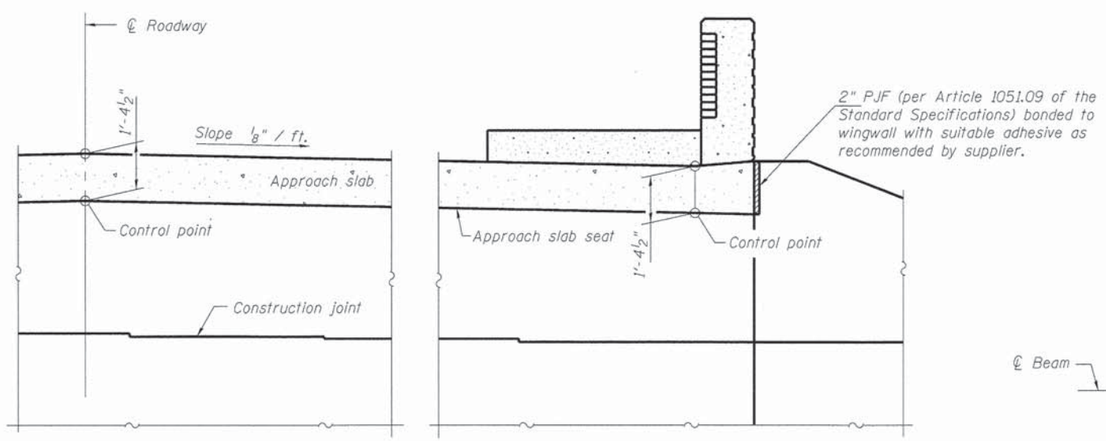

SECTION B-B

MIN. BAR LAP

#6 bar = 3'-10"

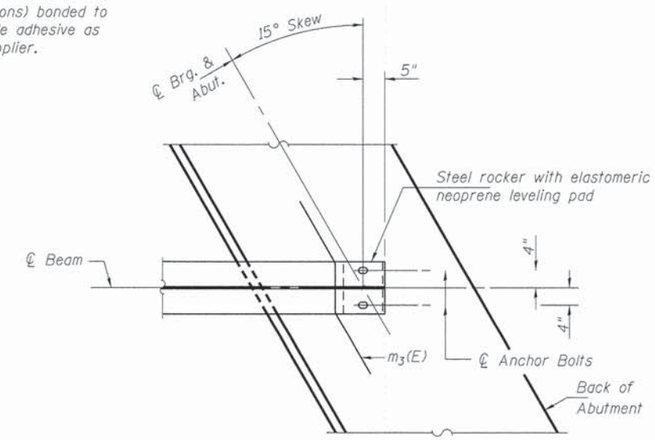

PARTIAL PLAN AT ABUTMENT

(Showing bottom flange of beam)

Notes:

Reinforcement bars in diaphragm are billed with superstructure on sheet SB-12.

Concrete in diaphragm is included with Concrete Superstructure on sheet SB-12.

For details of bars s(E), s_1(E) and v(E) see sheet SB-12.

The s(E) and s_1(E) bars shall be placed parallel to the beams. Spacing for these bars shall be at right angles to the beams.

The approach slab seat shall have a constant slope determined from the control points shown.

For bearing details see sheet SB-18.

COMPANY NAME: HR GREEN
PROJECT CONTACT: T. SCOTT GREECH, P.E.
CLIENT: VILLAGE OF HINSDALE
DATE PLOTTED: 12/15/2014 12:24:41 PM
FILE NAME: D32_STR_SB_Diaphragm-Details01.dgn
PLOT TOOL: pw1.pltr
PEN TABLE: standard-trans.tbl

HRGreen.com Illinois Professional Design Firm # 184-001322	USER NAME = whood	DESIGNED - JMW	REVISED -	STATE OF ILLINOIS DEPARTMENT OF TRANSPORTATION	INTEGRAL ABUTMENT DIAPHRAGM DETAILS STRUCTURE NO. 022-6404	F.A.U. RTE.	SECTION	COUNTY	TOTAL SHEETS / SHEET NO.
		CHECKED - RDG	REVISED -			2999	10-00089-00-BR	DUPAGE	157 / 104
	PLOT SCALE =	DRAWN - WJH	REVISED -			CONTRACT NO. 61B11			
	PLOT DATE = 12/15/2014	CHECKED - 12/15/14	REVISED -		SHEET NO. SB-13 OF SB-29 SHEETS	ILLINOIS FED. AID PROJECT BRM-9003(699)			

Notes:
See sheet SB-15 for Sections C-C & D-D and View E-E.
a_{10}(E) and a_{11}(E) bar spacings measured along ℄ Rdwy.
The joint opening shall be determined per Article 520.04 except that on jointless structures, the distance described as the bridge length between the nearest fixed bearings each way from the joint shall be taken as half the bridge length plus the approach slab length. The minimum dimension shall be 1½" for installation purposes.

*** Cost included with Concrete Superstructure.

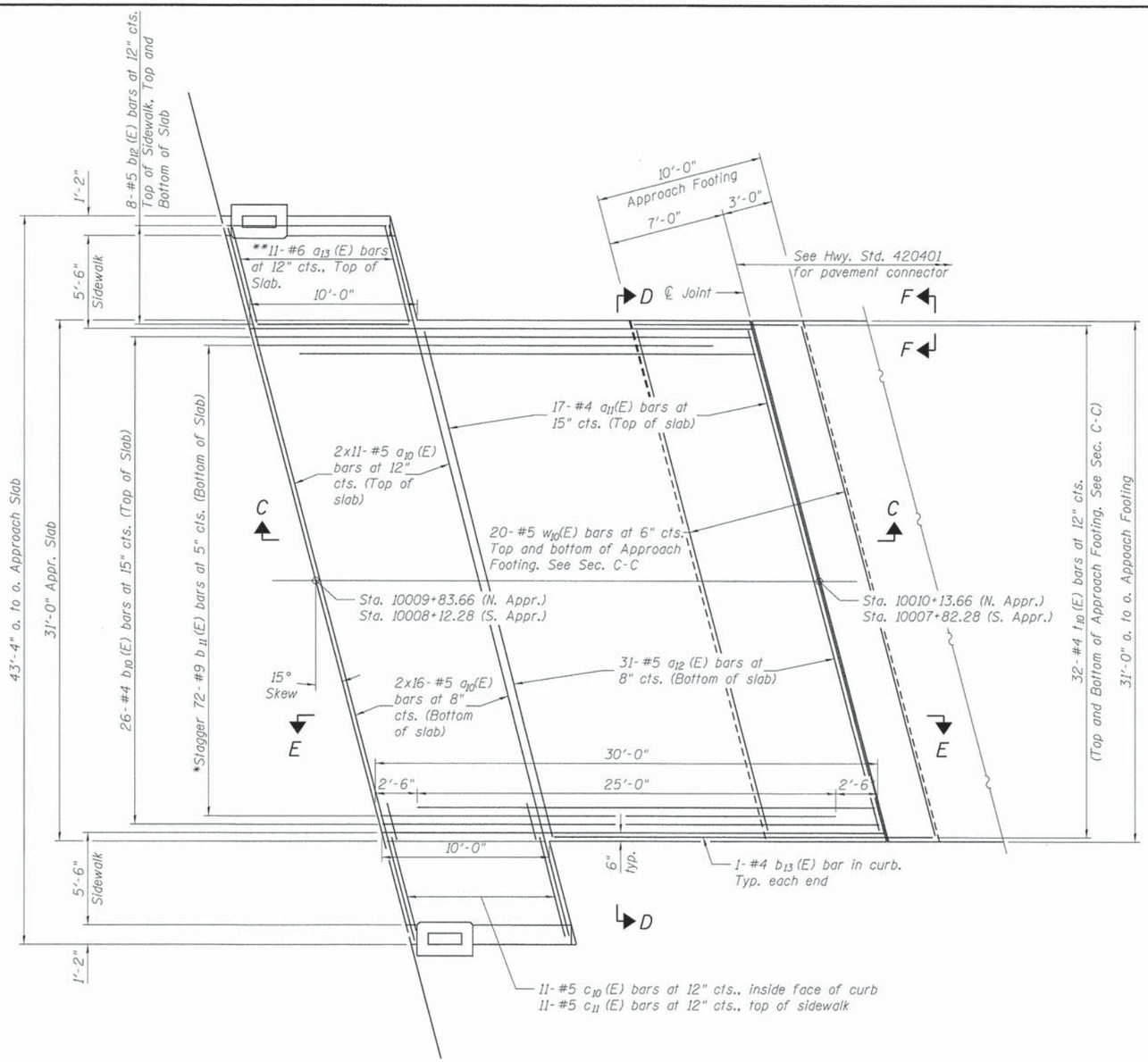

PLAN

* Tilt #9 b_1(E) bars as required to maintain clearance.
** Space between a(E) bars, typ. each parapet.

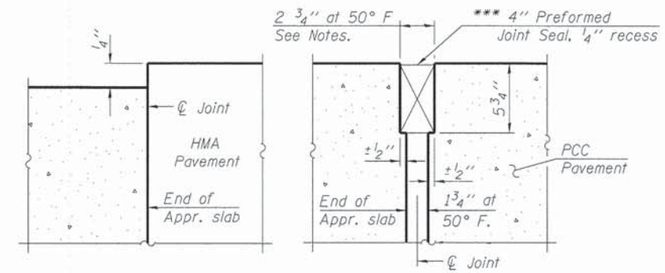

FLEXIBLE PAVEMENT

RIGID PAVEMENT

DETAIL A

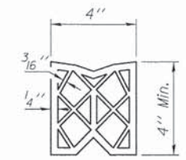

PREFORMED JOINT SEAL

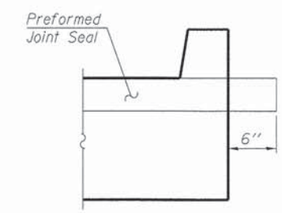

VIEW F-F

MIN. BAR LAP
#5 bar = 3'-3"

(North Approach) (South Approach)

(Sheet 1 of 2)

COMPANY NAME: HR GREEN
PROJECT CONTACT: T. SCOTT GREEN, P.E.
CLIENT: VILLAGE OF WOODDALE
DATE PLOTTED: 12/15/2014 10:05:14 AM
FILE NAME: 032_STR_SB_App01.dgn
PLOT DRIVER: pdf.pltr
PEN TABLE: standard-trans.tbl

HRGreen.com
Illinois Professional Design Firm # 184-001322

USER NAME = whood	DESIGNED - JMW	REVISED -	
	CHECKED - RDG	REVISED -	
PLOT SCALE =	DRAWN - WJH	REVISED -	
PLOT DATE = 12/15/2014	CHECKED - 12/15/14	REVISED -	

STATE OF ILLINOIS
DEPARTMENT OF TRANSPORTATION

BRIDGE APPROACH SLAB DETAILS
STRUCTURE NO. 022-6404

SHEET NO. SB-14 OF SB-29 SHEETS

F.A.U. RTE.	SECTION	COUNTY	TOTAL SHEETS	SHEET NO.
2999	10-00089-00-BR	DUPAGE	157	105
		CONTRACT NO. 61B11		
		ILLINOIS FED. AID PROJECT	BRM-9003(699)	

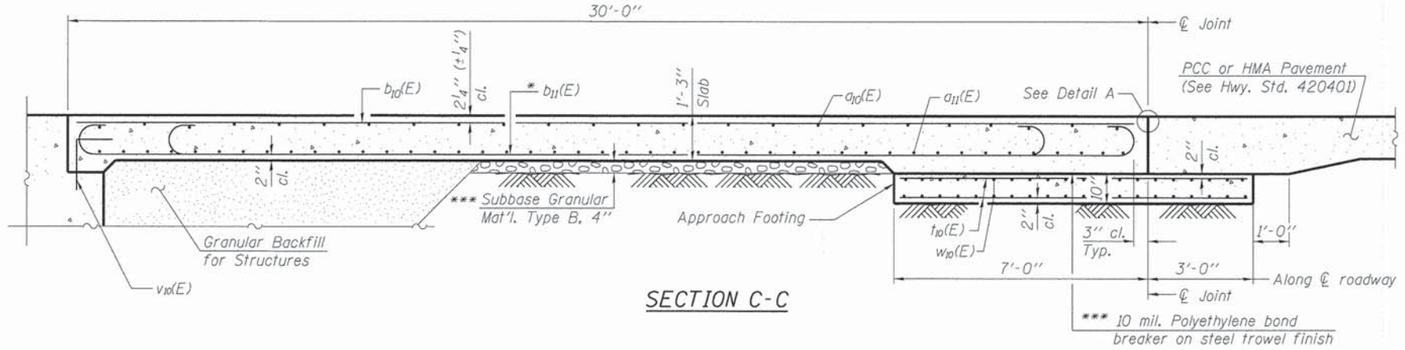

SECTION C-C

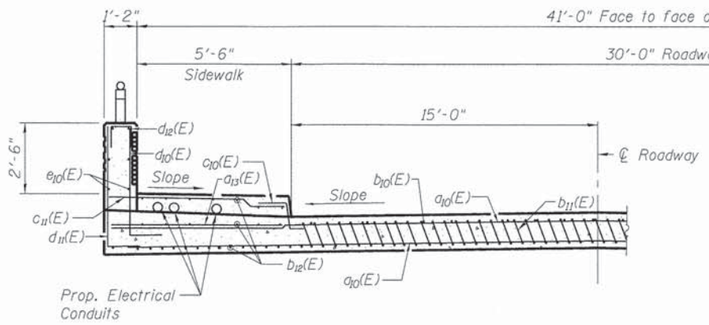

NEAR ABUTMENT

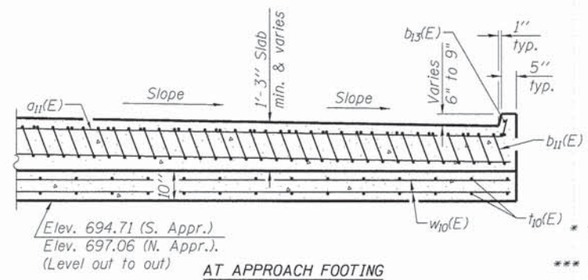

AT APPROACH FOOTING

SECTION D-D

(See Plan for dimensions not shown)

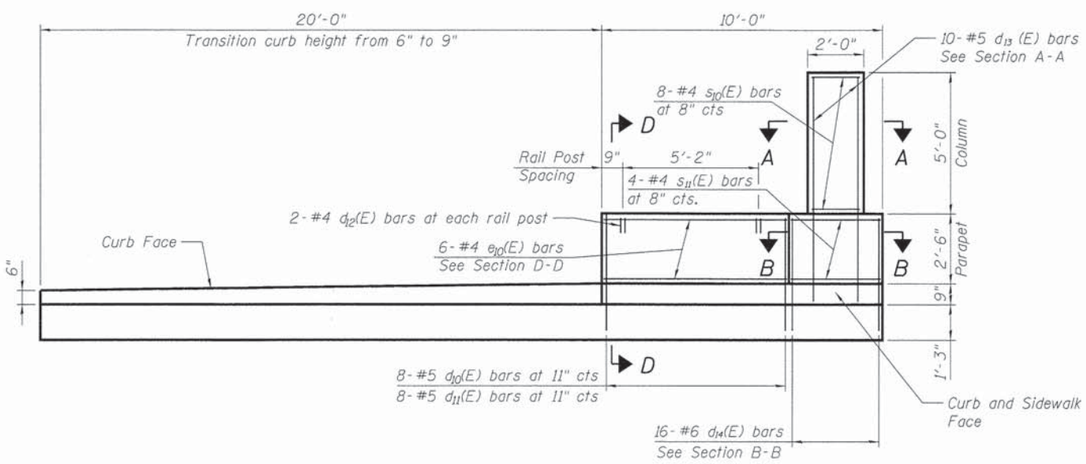

VIEW E-E

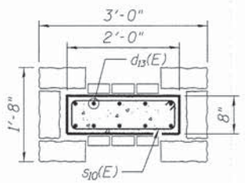

SECTION A-A

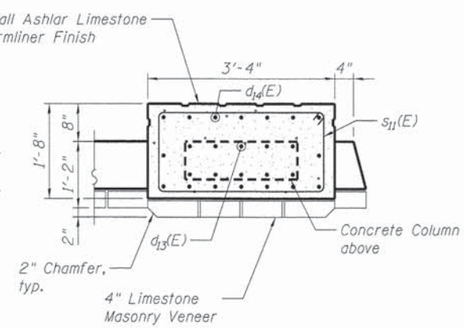

SECTION B-B

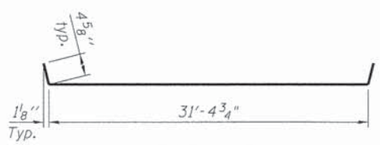

BAR $a_{11}(E)$

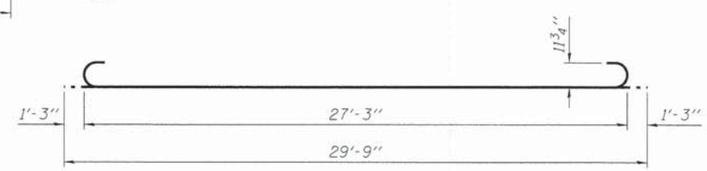

BAR $b_{11}(E)$

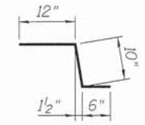

BAR $c_{10}(E)$

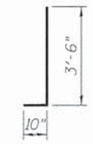

BAR $d_{10}(E)$

BAR $d_{12}(E)$

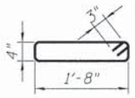

BAR $s_{10}(E)$

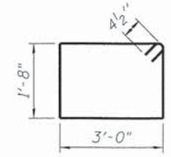

BAR $s_{11}(E)$

BAR $d_{11}(E)$

BAR $d_{14}(E)$

Notes:

Approach slab and parapet concrete shall be paid for as Concrete Superstructure.
Approach footing concrete shall be paid for as Concrete Structures.
Reinforcement shall be paid for as Reinforcement Bars, Epoxy Coated.
For $v_{10}(E)$ bar details, see sheet SB-12 and SB-13.
The approach footing maximum applied service bearing pressure (Qmax) = 2.0 ksf.
Cost of excavation for approach footing included with Concrete Structures.
For Granular Backfill for Structures and drainage treatment details, see sheet SB-04.
For additional parapet details, see sheet SB-11.

* Tilt #9 $b_{11}(E)$ bars as required to maintain clearance.

*** Cost included with Concrete Superstructure.

TWO APPROACHES BILL OF MATERIAL

Bar	No.	Size	Length	Shape
$a_{10}(E)$	108	#5	23'- 11"	
$a_{11}(E)$	34	#4	32'- 2"	
$a_{12}(E)$	62	#5	31'- 9"	
$a_{13}(E)$	44	#6	6'- 6"	
$b_{10}(E)$	52	#4	29'- 8"	
$b_{11}(E)$	144	#9	29'- 9"	
$b_{12}(E)$	96	#5	9'- 8"	
$b_{13}(E)$	4	#4	19'- 8"	
$c_{10}(E)$	44	#5	2'- 4"	
$c_{11}(E)$	44	#5	6'- 4"	
$d_{10}(E)$	32	#5	4'- 4"	
$d_{11}(E)$	32	#5	5'- 3"	
$d_{12}(E)$	16	#4	2'- 4"	
$d_{13}(E)$	40	#5	7'- 11"	
$d_{14}(E)$	64	#6	5'- 0"	
$e_{10}(E)$	24	#4	6'- 0"	
$s_{10}(E)$	32	#4	4'- 6"	
$s_{11}(E)$	16	#4	10'- 1"	
$t_{10}(E)$	128	#4	10'- 0"	
$w_{10}(E)$	80	#5	31'- 9"	
Concrete Superstructure			Cu. Yd.	119.1
Concrete Structures			Cu. Yd.	19.8
Bridge Deck Grooving			Sq. Yd.	200
Protective Coat			Sq. Yd.	249
Reinforcement Bars, Epoxy			Pound	27,880
Bar Splicers			Each	44

(Sheet 2 of 2)

COMPANY NAME: HR GREEN
PROJECT CONTACT: T. SCOTT CREECH, P.E.
CLIENT: VILLAGE OF HINSDALE
DATE PLOTTED: 12/15/2014 1:52:46 PM
FILE NAME: 022_STR_SB_App02.dgn
PLOT DRIVER: pdf.pltr
PEN TABLE: standard-fr-ons.tbl

HRGreen.com
Illinois Professional Design Firm # 184-001322

USER NAME = whood	DESIGNED - JMW	REVISED -	
	CHECKED - RDG	REVISED -	
PLOT SCALE =	DRAWN - WJH	REVISED -	
PLOT DATE = 12/15/2014	CHECKED - 12/15/14	REVISED -	

STATE OF ILLINOIS
DEPARTMENT OF TRANSPORTATION

BRIDGE APPROACH SLAB DETAILS
STRUCTURE NO. 022-6404

SHEET NO. SB-15 OF SB-29 SHEETS

F.A.U. RTE.	SECTION	COUNTY	TOTAL SHEETS	SHEET NO.
2999	10-00089-00-BR	DUPAGE	157	106

CONTRACT NO. 61B11

ILLINOIS FED. AID PROJECT BRM-9003(699)

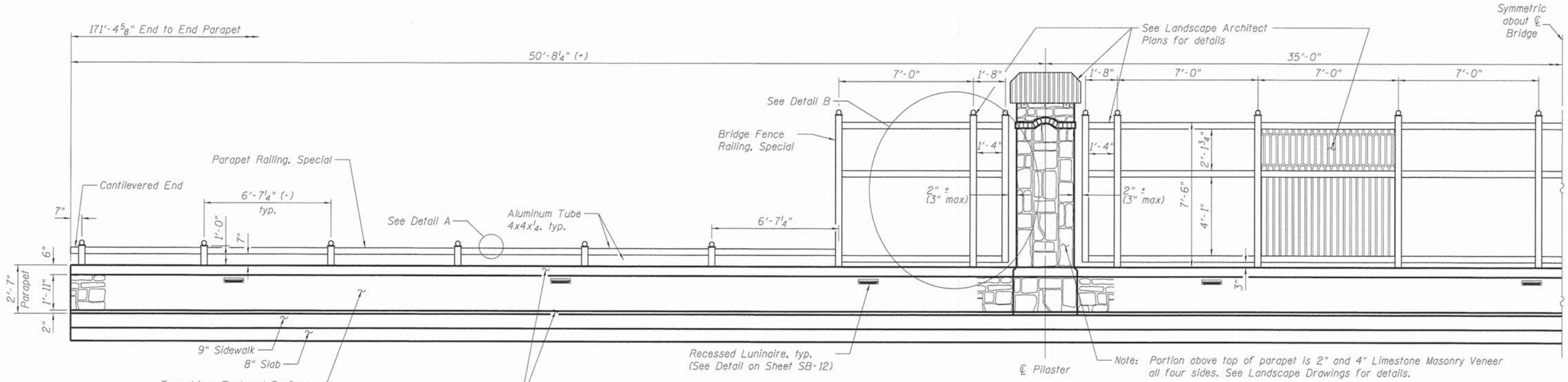

INSIDE ELEVATION BRIDGE RAILING DETAILS

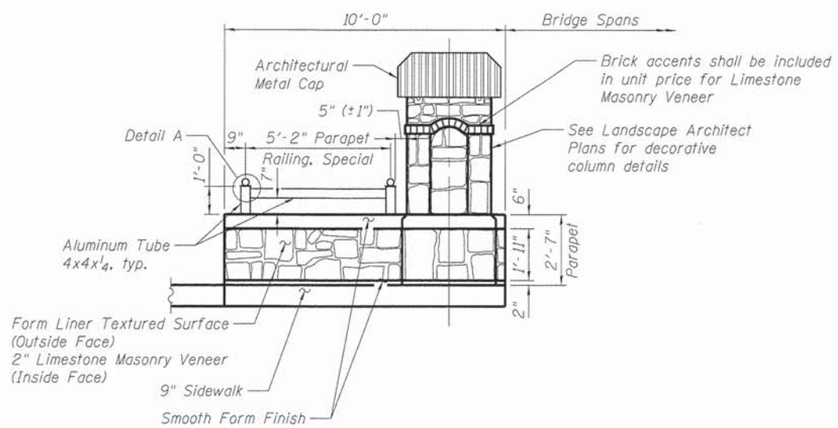

APPROACH SLAB RAILING DETAILS

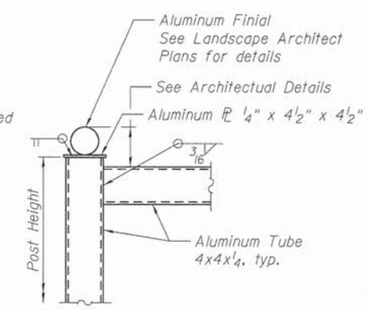

DETAIL A

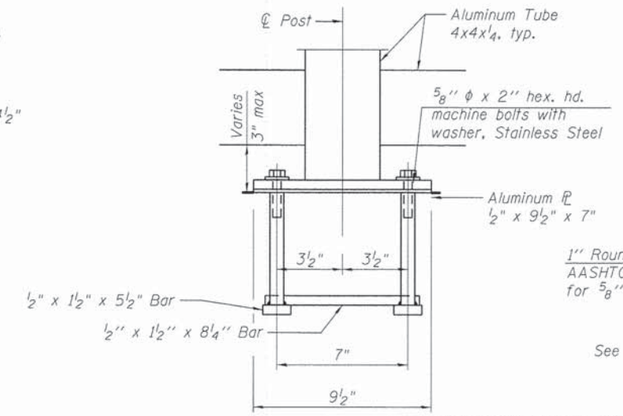

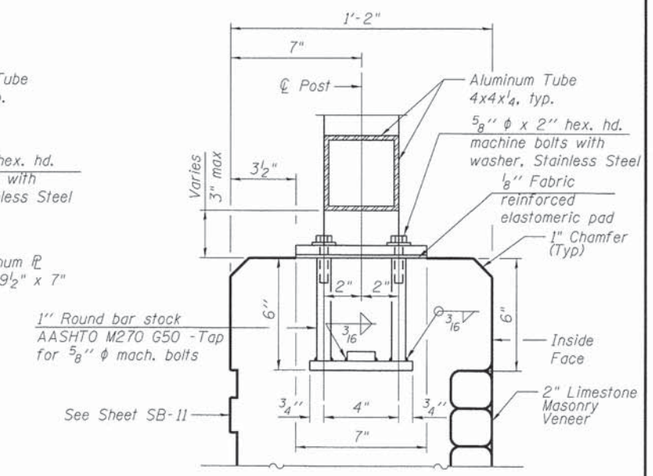

ANCHOR BOLT DETAILS

Anchor device must be cast-in-place as shown.
Drilling and setting anchor rods in not allowed.

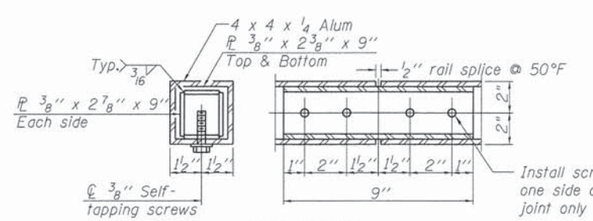

RAIL SPLICE

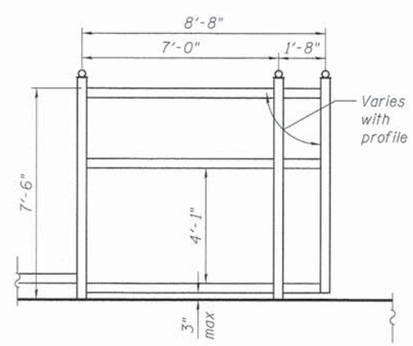

DETAIL B

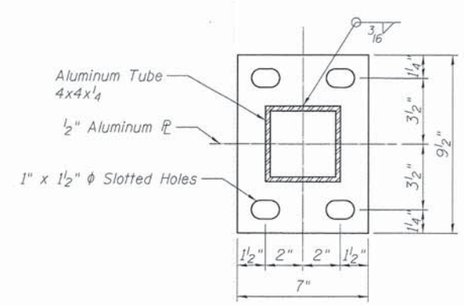

BASE PL

BILL OF MATERIAL

Item	Unit	Quantity
Form Liner Textured Surface	Sq. Ft.	1.036
Limestone Masonry Veneer	Sq. Ft.	1.274
Staining Concrete Structures	Sq. Ft.	1.036
Bridge Fence Railing (Special)	Foot	168
Parapet Railing, Special	Foot	182
Architectural Cap, Metal	Each	4
Luminaire, LED, Recessed Mount, 11.2 Watt	Each	20

COMPANY NAME: HR GREEN
PROJECT CONTACT: T. SCOTT CREECH, P.E.
CLIENT: VILLAGE OF HINSDALE
DATE PLOTTED: 12/15/2014 1:52:49 PM
FILE NAME: 022-6404_SB_Railign.pltcfg
PLOT DRAWER: standard-trans.tbl
PEN TABLE:

HRGreen.com
Illinois Professional Design Firm # 184-001322

USER NAME = whood	DESIGNED - JMW	REVISED -	
	CHECKED - RDG	REVISED -	
PLOT SCALE =	DRAWN - WJH	REVISED -	
PLOT DATE = 12/15/2014	CHECKED - 12/15/14	REVISED -	

STATE OF ILLINOIS
DEPARTMENT OF TRANSPORTATION

BRIDGE RAILING DETAILS
STRUCTURE NO. 022-6404

SHEET NO. SB-16 OF SB-29 SHEETS

F.A.U. RTE.	SECTION	COUNTY	TOTAL SHEETS	SHEET NO.
2999	10-00089-00-BR	DUPAGE	157	107
		CONTRACT NO. 61B11		
		ILLINOIS FED. AID PROJECT	BRM-9003(699)	

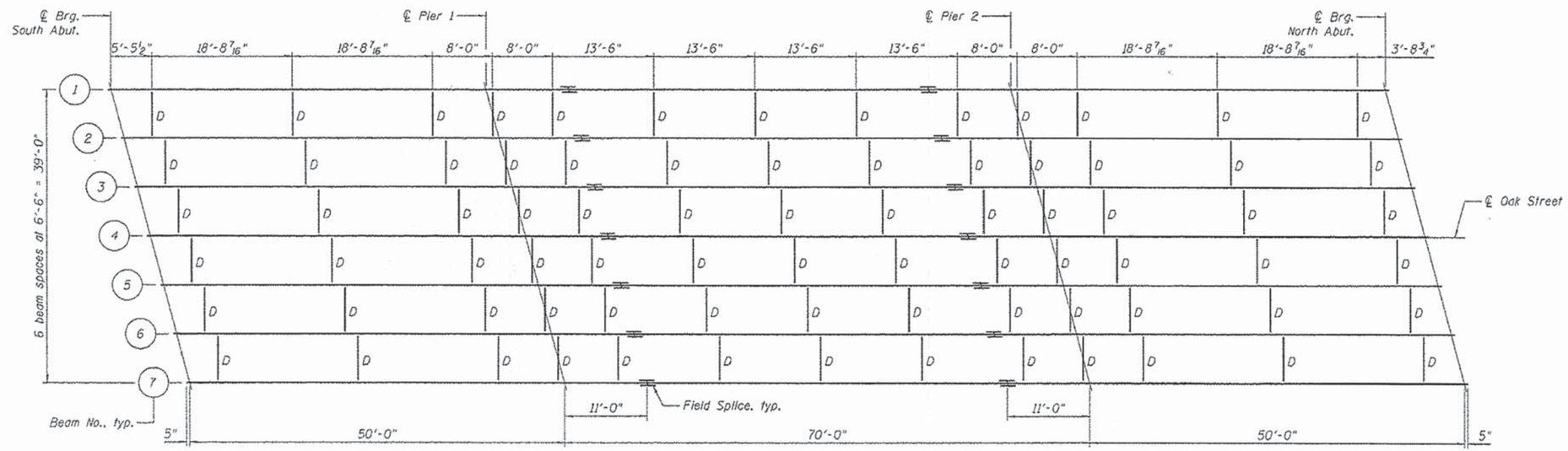

FRAMING PLAN

All structural steel for plate girders and splice plate is AASHTO M270, Grade 50 (NTR)

—N—

INTERIOR GIRDER MOMENT TABLE				
		0.4 Sp. 1 or 0.6 Sp. 3	Pier	0.5 Sp. 2
Is	(in^4)	3,134	3,134	3,134
Ic (n)	(in^4)	9,300	---	9,300
Ic (3n)	(in^4)	6,581	---	6,581
Ic (cr)	(in^4)	---	4,527	---
Ss	(in^3)	313	313	313
Sc (n)	(in^3)	479	---	479
Sc (3n)	(in^3)	427	---	427
Sc (cr)	(in^3)	---	371	---
DC1	(k/ft.)	0.84	0.84	0.84
M_{DC1}	('k)	125	316	197
DC2	(k/ft.)	0.60	0.60	0.60
M_{DC2}	('k)	97	207	161
DW	(k/ft.)	0.33	0.33	0.33
M_{DW}	('k)	53	112	87
M_{LL+IM}	('k)	450	346	570
M_u (Strength I)	('k)	1,143	1,426	1,575
$\phi_f M_n$	('k)	2,108	1,818	2,108
fs DC1	(k.s.i.)	4.8	12.1	7.5
fs DC2	(k.s.i.)	2.7	6.7	4.5
fs DW	(k.s.i.)	1.5	3.6	2.4
fs (LL+IM)	(k.s.i.)	11.3	11.2	14.3
fs (Service II)	(k.s.i.)	23.6	36.9	33.1
0.95RhFyf	(k.s.i.)	47.5	47.5	47.5
fs (Total)(Strength I)	(k.s.i.)	31.3	48.5	43.7
$\phi_f F_n$	(k.s.i.)	50.0	50.0	50.0
Vf	(k)	10.8	31.1	11.2

TOP OF WEB ELEVATIONS For Fabrication Only						
Beam No.	CL Brg. S. Abut.	CL Pier 1	Splice 1	Splice 2	CL Pier 2	CL Brg. N. Abut.
1	699.10	702.25	702.34	702.75	702.84	700.52
2	699.26	702.34	702.41	702.75	702.82	700.43
3	699.46	702.47	702.53	702.79	702.85	700.39
4	699.66	702.59	702.64	702.83	702.87	700.34
5	699.72	702.58	702.61	702.73	702.76	700.15
6	699.78	702.57	702.58	702.63	702.65	699.97
7	699.88	702.60	702.60	702.58	702.57	699.82

INTERIOR GIRDER REACTION TABLE			
		Abut.	Pier
R DC1	(k)	14.6	56.5
R DC2	(k)	10.9	40.2
R DW	(k)	5.9	21.7
R LL+I	(k)	69	103.4
R Total	(k)	100.4	221.8

I_s, S_s: Non-composite moment of inertia and section modulus of the steel section used for computing f_s (Total-Strength I, and Service II) due to non-composite dead loads ($in.^4$ and $in.^3$).

$I_c(n)$, $S_c(n)$: Composite moment of inertia and section modulus of the steel and deck based upon the modular ratio, "n", used for computing f_s (Total-Strength I, and Service II) in uncracked sections due to short-term composite live loads ($in.^4$ and $in.^3$).

$I_c(3n)$, $S_c(3n)$: Composite moment of inertia and section modulus of the steel and deck based upon 3 times the modular ratio, "3n", used for computing f_s (Total-Strength I, and Service II) in uncracked sections, due to long-term composite (superimposed) dead loads ($in.^4$ and $in.^3$).

DC1: Un-factored non-composite dead load (kips/ft.).

M_{DC1}: Un-factored moment due to non-composite dead load (kip-ft.).

DC2: Un-factored long-term composite (superimposed excluding future wearing surface) dead load (kips/ft.).

M_{DC2}: Un-factored moment due to long-term composite (superimposed excluding future wearing surface) dead load (kip-ft.).

DW: Un-factored long-term composite (superimposed future wearing surface only) dead load (kips/ft.).

M_{DW}: Un-factored moment due to long-term composite (superimposed future wearing surface only) dead load (kip-ft.).

M_{LL+IM}: Un-factored live load moment plus dynamic load allowance (impact) (kip-ft.).

M_u (Strength I): Factored design moment (kip-ft.).
$1.25\ (M_{DC1} + M_{DC2}) + 1.5\ M_{DW} + 1.75\ M_{LL+IM}$

$\phi_f M_n$: Compact composite positive moment capacity computed according to Article 6.10.7.1 or non-slender negative moment capacity according to Article A6.1.1 or A6.1.2 (kip-ft).

f_s DC1: Un-factored stress at edge of flange for controlling steel flange due to vertical non-composite dead loads as calculated below (ksi).
M_{DC1} / S_{nc}

f_s DC2: Un-factored stress at edge of flange for controlling steel flange due to vertical composite dead loads as calculated below (ksi).
$M_{DC2} / S_c(3n)$ or $M_{DC2} / S_c(cr)$ as applicable.

f_s DW: Un-factored stress at edge of flange for controlling steel flange due to vertical composite future wearing surface loads as calculated below (ksi).
$M_{DW} / S_c(3n)$ or $M_{DW} / S_c(cr)$ as applicable.

f_s (LL+IM): Un-factored stress at edge of flange for controlling steel flange due to vertical composite live load plus impact loads as calculated below (ksi).
$M_{LL+IM} / S_c(n)$.

f_s (Service II): Sum of stresses as computed below (ksi).
$f_{sDC1} + f_{sDC2} + f_{sDW} + 1.3\ f_s(LL+IM)$

$0.95R_hF_yf$: Composite stress capacity for Service II loading according to Article 6.10.4.2 (ksi).

f_s (Total)(Strength I): Sum of stresses as computed below on non-compact section (ksi).
$1.25\ (f_{sDC1} + f_{sDC2}) + 1.5\ f_{sDW} + 1.75\ f_s(LL+IM)$

$\phi_f F_n$: Non-Compact composite positive or negative stress capacity for Strength I loading according to Article 6.10.7 or 6.10.8 (ksi).

V_f: Maximum factored shear range in span computed according to Article 6.10.10.

Notes:

1. Load carrying components designated "NTR" shall conform to the Impact Testing Requirements, Zone 2.

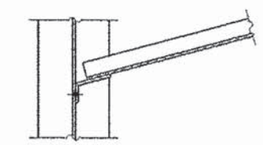

SECTION A-A

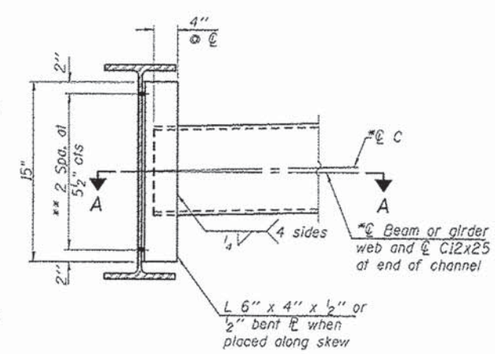

INTERIOR DIAPHRAGM, D

Note:
Two hardened washers required for each set of oversized holes.
*Alternate channels C12x30 are permitted to facilitate material acquisition. Calculated weight of structural steel is based on the lighter section. The alternate, if utilized, shall be provided at no additional cost to the Department.
**¾" ϕ HS bolts, 15/16" ϕ holes

COMPANY NAME: HR GREEN
PROJECT CONTACT: T. SCOTT ERBECK, P.E.
CLIENT: VILLAGE OF HINSDALE
DATE PLOTTED: 1/29/2015 3:38:15 PM
FILE NAME: C:\PW_WORK\pwdefault\d1915\proj\erbes0001\standard-transom.dgn
PLOT DRIVER: pltFull.pltcfg
PEN TABLES: standard-transom.tbl

HRGreen
HRGreen.com
Illinois Professional Design Firm # 184-001322

USER NAME = whood	DESIGNED - JMW	REVISED -
	CHECKED - RDG	REVISED -
PLOT SCALE =	DRAWN - WJH	REVISED -
PLOT DATE = 1/29/2015	CHECKED - 1/29/15	REVISED -

STATE OF ILLINOIS
DEPARTMENT OF TRANSPORTATION

STEEL GIRDER FRAMING PLAN
STRUCTURE NO. 022-6404

SHEET NO. SB-17 OF SB-29 SHEETS

F.A.U. RTE.	SECTION	COUNTY	TOTAL SHEETS	SHEET NO.
2999	10-00089-00-BR	DUPAGE	157	108
		CONTRACT NO. 61B11		
		(ILLINOIS) FED. AID PROJECT BRM-9003(699)		

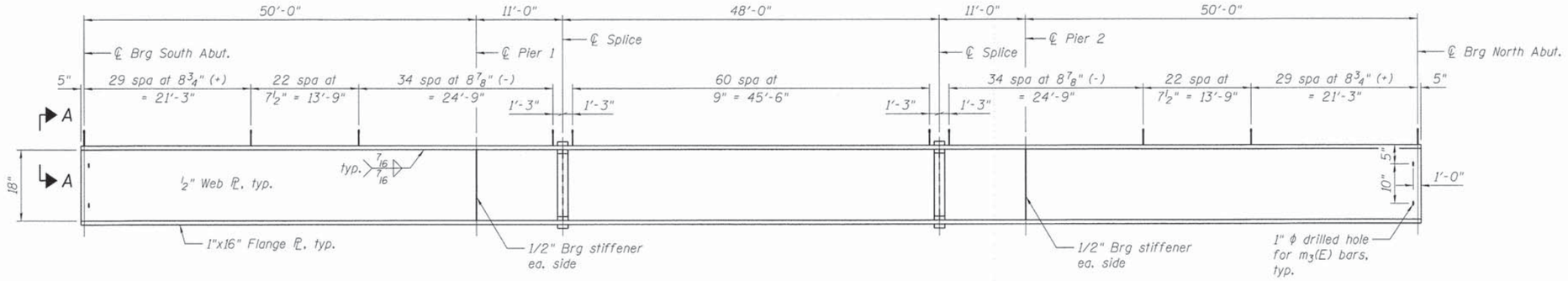

GIRDER ELEVATION

All structural steel for plate girders and splice plate is AASHTO M270, Grade 50 (NTR)

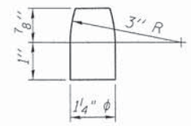

PINTLE

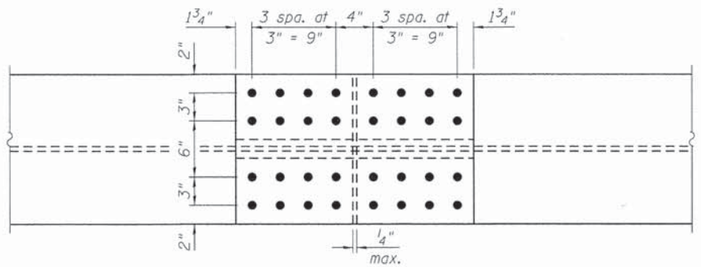

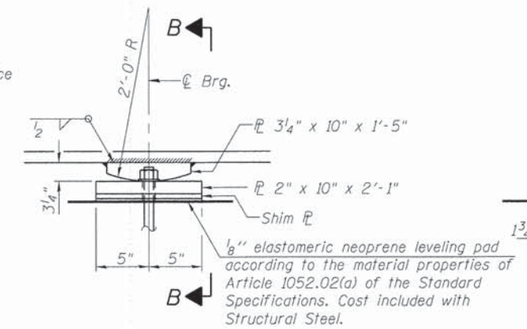

ELEVATION AT PIER

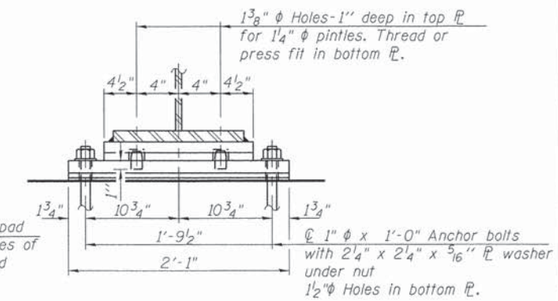

SECTION B-B

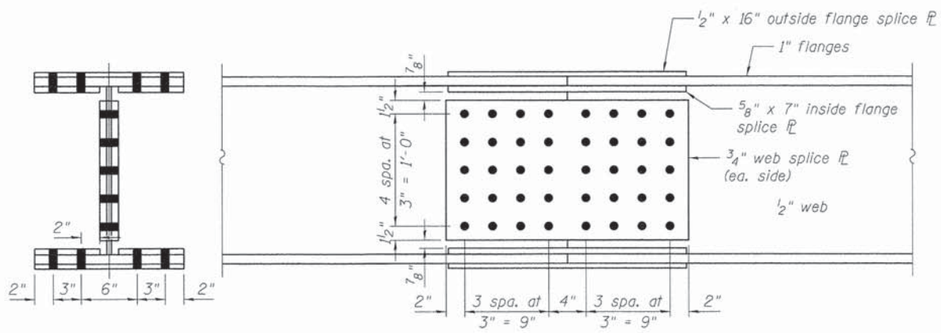

FIELD SPLICE DETAIL

(14 Required)

FIXED BEARING

at Piers 1 and 2
(14 Required)

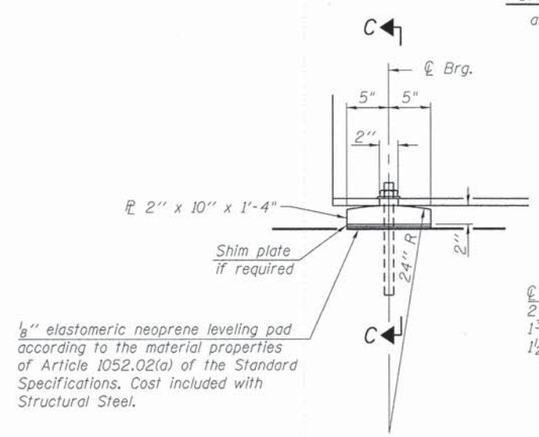

ELEVATION AT ABUTMENT

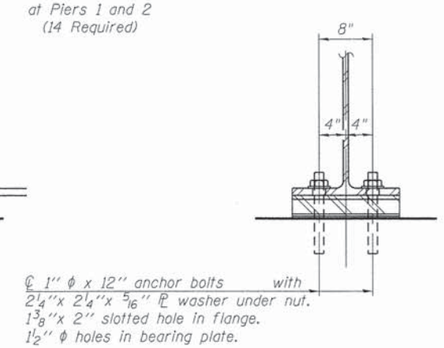

SECTION C-C

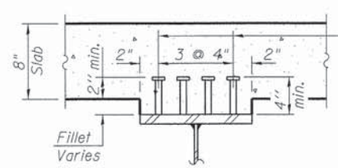

¾" ϕ Granular or solid flux filled headed studs, automatically end welded to flange. (6524 Required)

SECTION A-A

Notes:

Anchor bolts shall be ASTM F1554 all-thread (or an Engineer-approved alternate material) of the grade(s) and diameter(s) specified. The corresponding specified grade of AASHTO M314 anchor bolts may be used in lieu of ASTM F1554.

Anchor bolts at fixed bearings may be either cast in place or installed in holes drilled after the supported member is in place.

Drilled and set anchor bolts shall be installed according to Article 521.06 of the Standard Specifications.

Two ⅛ in adjusting shims shall be provided for each bearing in addition to all other plates or shims and placed as shown on bearing details.

Load carrying components designated "NTR" shall conform to the Impact Testing Requirements, Zone 2.

FIXED BEARING

at Abutments
(14 Required)

BILL OF MATERIAL

Item	Unit	Quantity
Furnishing & Erecting Structural Steel	L. Sum	1
Stud Shear Connectors	Each	6,524
Anchor Bolts, 1"	Each	56

COMPANY NAME: HR GREEN
PROJECT CONTACT: T. SCOTT GREEN, P.E.
CLIENT: VILLAGE OF HINSDALE
DATE PLOTTED: 12/15/2014 1:55:55 PM
FILE NAME: 032_STR_SB_Girder.dgn
PLOT DRIVER: pdf.pltr
PEN TABLE: standard-trans.tbl

HRGreen.com
Illinois Professional Design Firm # 184-001322
HRGreen

USER NAME = whood	DESIGNED - JMW	REVISED -	
	CHECKED - RDG	REVISED -	
PLOT SCALE =	DRAWN - WJH	REVISED -	
PLOT DATE = 12/15/2014	CHECKED - 12/15/14	REVISED -	

STATE OF ILLINOIS
DEPARTMENT OF TRANSPORTATION

STEEL GIRDER ELEVATION AND DETAILS
STRUCTURE NO. 022-6404

SHEET NO. SB-18 OF SB-29 SHEETS

F.A.U. RTE.	SECTION	COUNTY	TOTAL SHEETS	SHEET NO.
2999	10-00089-00-BR	DUPAGE	157	109

CONTRACT NO. 61B11

ILLINOIS FED. AID PROJECT BRM-9003(699)

When cantilever forming brackets are used, the work shall be done according to Article 503.06(b) of the Standard Specifications, except as modified below and in the details shown on this sheet.

The finishing machine rails shall be placed on the top flange of the exterior beams.

The beams or girders, supporting cantilever forming brackets, shall be tied together at 4 foot intervals.

For Standard construction, or Stage Construction the Hardwood bracing materials shall be placed as shown between webs of beams in each bay.

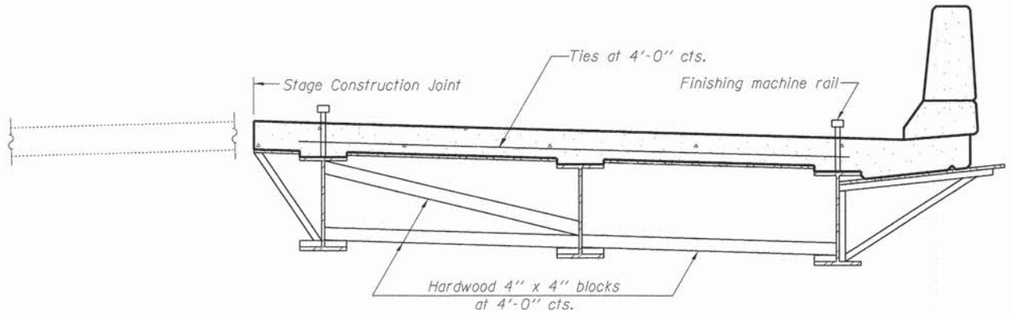

FORM BRACES FOR
STAGE CONSTRUCTION

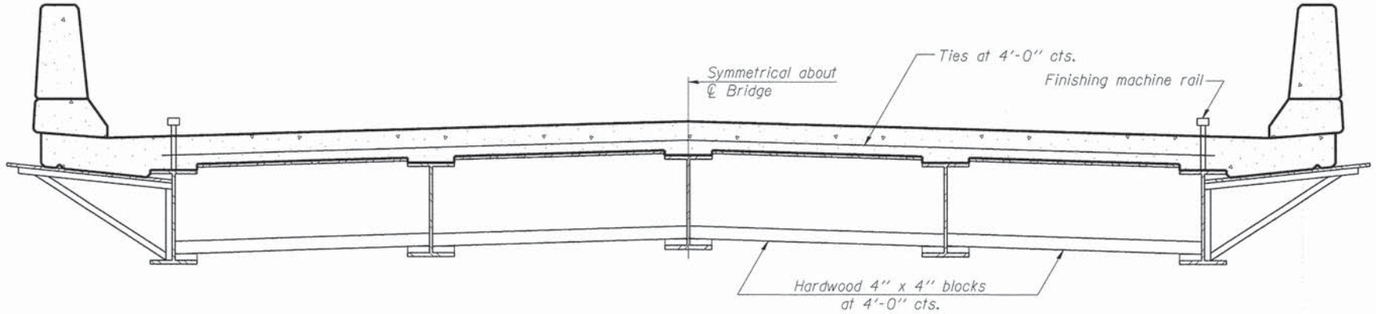

FORM BRACES FOR
STANDARD CONSTRUCTION

SB-1

7-1-10

HRGreen.com Illinois Professional Design Firm # 184-001322	USER NAME = whood	DESIGNED - JMW	REVISED -	STATE OF ILLINOIS DEPARTMENT OF TRANSPORTATION	CANTILEVER FORMING BRACKETS FOR SUPERSTRUCTURES WITH W27 BEAMS AND SMALLER STRUCTURE NO. 022-6404
		CHECKED - RDG	REVISED -		
	PLOT SCALE =	DRAWN - WJH	REVISED -		
	PLOT DATE = 12/15/2014	CHECKED - 12/15/14	REVISED -		SHEET NO. SB-19 OF SB-29 SHEETS

F.A.U. RTE.	SECTION	COUNTY	TOTAL SHEETS	SHEET NO.
2999	10-00089-00-BR	DUPAGE	157	110
		CONTRACT NO. 61B11		
		ILLINOIS FED. AID PROJECT BRM-9003(699)		

COMPANY NAME: HR GREEN
PROJECT CONTACT: T. SCOTT CREECH, P.E.
CLIENT: VILLAGE OF HINSDALE
DATE PLOTTED: 12/15/2014 03:57 PM
FILE NAME: 022-6404_STR_SB_CFB-01.dgn
PLOT DRIVER: pdf.pltcfg
PEN TABLE: standard-trans.tbl

Notes:
Pour steps monolithically with cap.

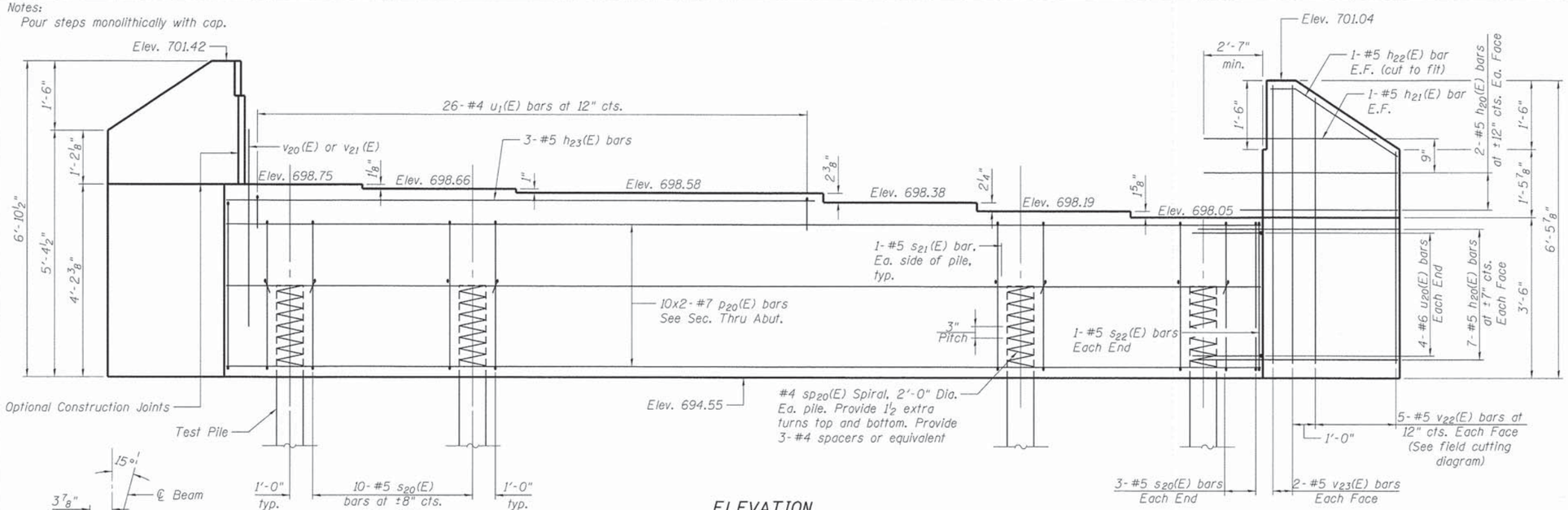

ELEVATION

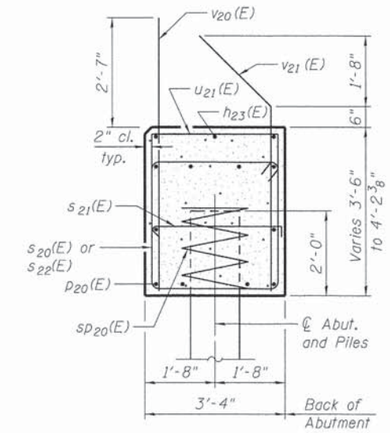

SECTION THRU ABUT.

Dimensions at right angles to abutment.

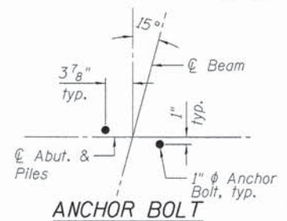

ANCHOR BOLT LAYOUT

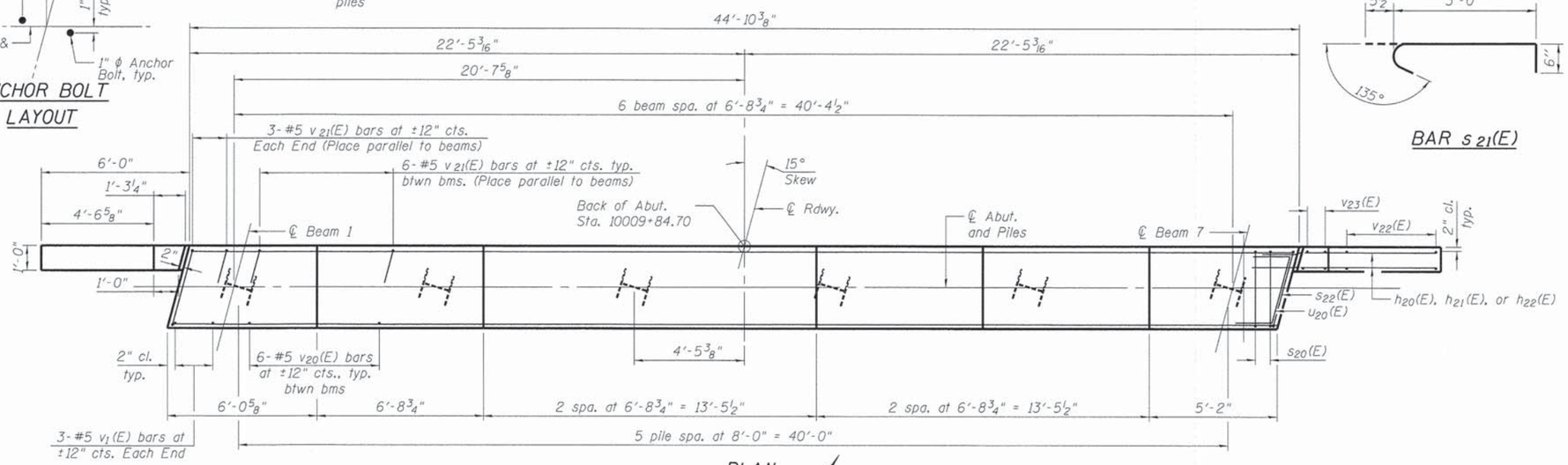

PLAN

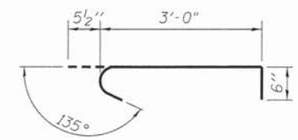

BAR s_{21}(E)

BILL OF MATERIAL

Bar	No.	Size	Length	Shape
h_{20} (E)	36	#5	8'- 5"	
h_{21}(E)	4	#5	6'- 1"	
h_{22}(E)	4	#5	5'- 3"	
h_{23}(E)	3	#5	25'- 4"	
p_{20} (E)	20	#7	24'- 10"	
s_{20} (E)	56	#5	13'- 3"	
s_{21} (E)	12	#5	4'- 0"	
s_{22} (E)	2	#5	13'- 5"	
* sp_{20} (E)	6	#4	2'- 0"	
u_{20}(E)	8	#6	10'- 9"	
u_{21}(E)	26	#4	6'- 2"	
v_{20} (E)	42	#5	5'- 11"	
v_{21} (E)	42	#5	6'- 2"	
v_{22} (E)	10	#5	10'- 5"	
v_{23} (E)	8	#5	6'- 3"	
Concrete Structures			Cu. Yd.	24.3
Reinforcement Bars, Epoxy Coated			Pound	3,240
Furnishing Steel Piles HP14x73			Foot	185
Test Pile Steel HP14x73			Each	1
Driving Piles			Foot	185

* Length is height of spiral.

For details of piles see sheet SB-23

PILE DATA

Type: Steel HP 14x73
Nominal Required Bearing: 259k
Factored Resistance Available: 143k
Est. Length: 37'
No. Production Piles: 5
No. Test Piles: 1

Piles shall be driven through 18" diameter precored holes extending to elevation 680.00 according to Article 512.09(c) of the Standard Specifications. Cost included in driving piles.

MINIMUM BAR LAP

#7 bar = 5'-2"

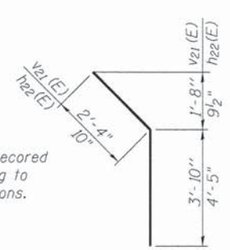

BAR v_{21}(E) & h_{22}(E)

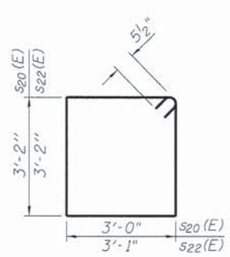

BAR s_{20}(E) & s_{22}(E)

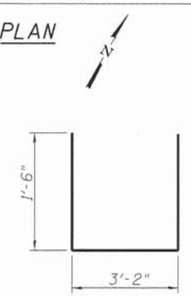

BAR u_{21}(E)

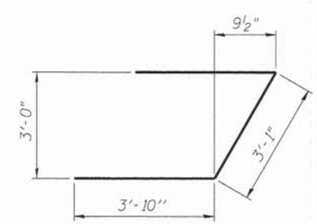

BAR u_{20}(E)

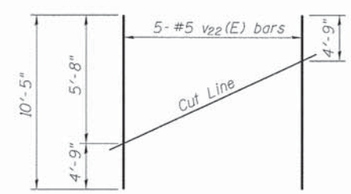

FIELD CUTTING DIAGRAM

Order v_{22}(E) full length. Cut as shown and use remainder of bars in opposite face.

COMPANY NAME: HR GREEN
PROJECT CONTACT: T. SCOTT CREECH, P.E.
CLIENT: VILLAGE OF HINSDALE
DATE PLOTTED: 12/15/2014 03:00 PM
FILE NAME: 022_S1R_SB_Abut_N.dgn
PLOT SCALE: pw\Jim
PEN TABLE: standard-trans.tbl

HRGreen.com
Illinois Professional Design Firm # 184-001322

USER NAME = whood	DESIGNED - JMW	REVISED -	
	CHECKED - RGD	REVISED -	
PLOT SCALE =	DRAWN - WJH	REVISED -	
PLOT DATE = 12/15/2014	CHECKED - 12/15/14	REVISED -	

STATE OF ILLINOIS
DEPARTMENT OF TRANSPORTATION

NORTH ABUTMENT
STRUCTURE NO. 022-6404

SHEET NO. SB-20 OF SB-29 SHEETS

F.A.U. RTE.	SECTION	COUNTY	TOTAL SHEETS	SHEET NO.
2999	10-00089-00-BR	DUPAGE	157	111

CONTRACT NO. 61B11

ILLINOIS FED. AID PROJECT BRM-9003(699)

Notes:
Pour steps monolithically with cap.

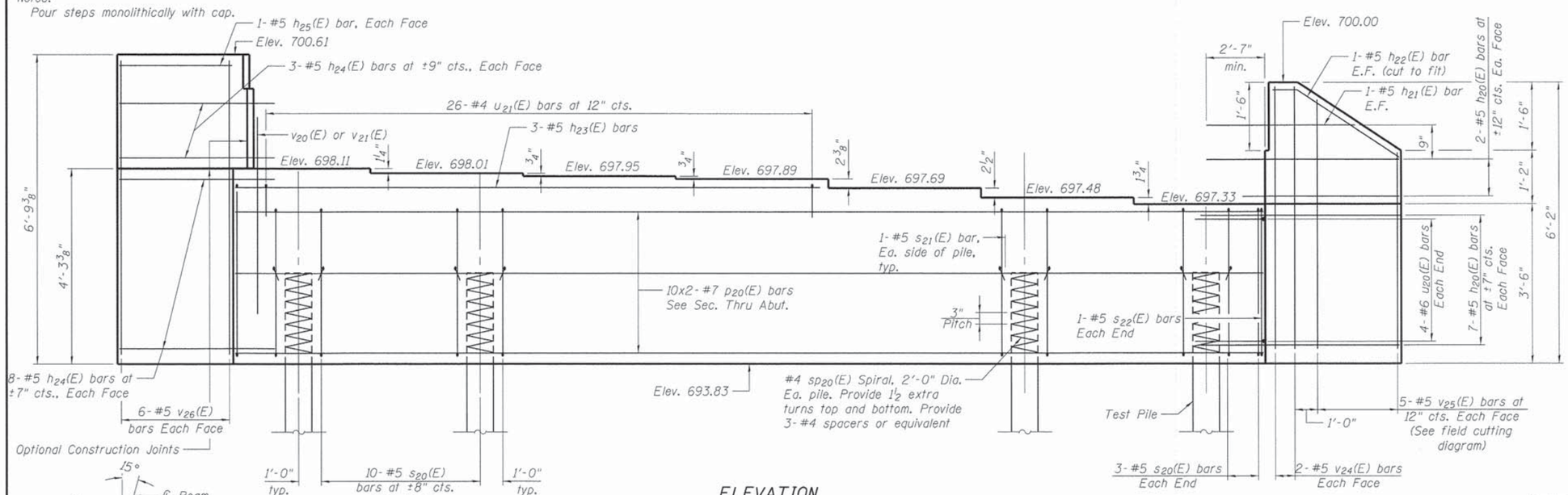

ELEVATION

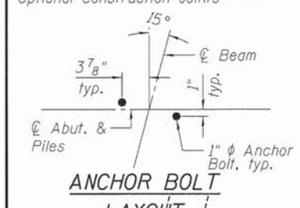

ANCHOR BOLT LAYOUT

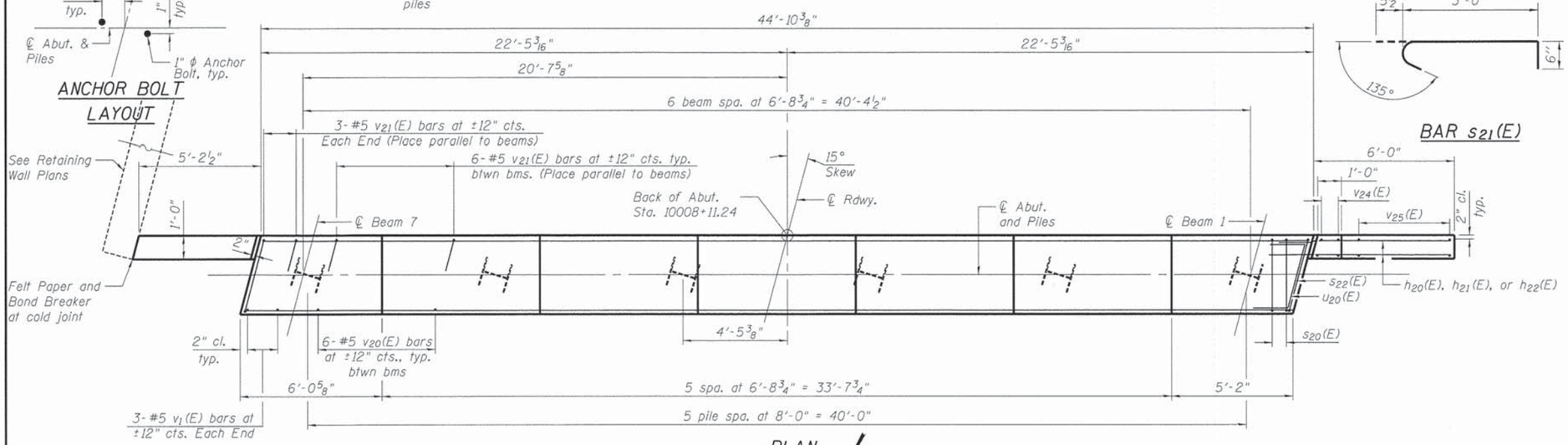

PLAN

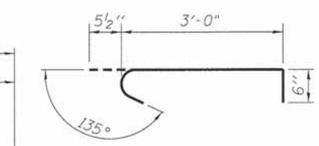

BAR s21(E)

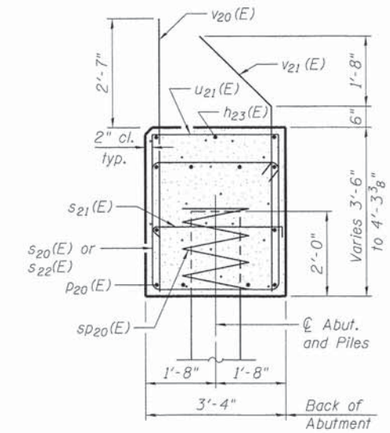

SECTION THRU ABUT.

Dimensions at right angles to abutment.

BILL OF MATERIAL

Bar	No.	Size	Length	Shape
h20(E)	18	#5	8'- 5"	
h21(E)	2	#5	6'- 1"	
h22(E)	2	#5	5'- 3"	
h23(E)	3	#5	25'- 4"	
h24(E)	22	#5	7'- 8"	
h25(E)	2	#5	4'- 8"	
p20 (E)	20	#7	24'- 10"	
s20 (E)	56	#5	13'- 3"	
s21 (E)	12	#5	4'- 0"	
s22 (E)	2	#5	13'- 5"	
* sp20 (E)	6	#4	2'- 0"	
u20 (E)	8	#6	10'- 9"	
u21 (E)	26	#4	6'- 2"	
v20 (E)	42	#5	5'- 11"	
v21 (E)	42	#5	6'- 2"	
v24 (E)	4	#5	5'- 10"	
v25 (E)	5	#5	10'- 0"	
v26 (E)	12	#5	6'- 5"	
Structure Excavation			Cu. Yd.	30.5
Concrete Structures			Cu. Yd.	24.3
Reinforcement Bars, Epoxy Coated			Pound	3,240
Furnishing Steel Piles HP14x73			Foot	180
Test Pile Steel HP14x73			Each	1
Driving Piles			Foot	180

* Length is height of spiral.
For details of piles see sheet SB-23

PILE DATA

Type: Steel HP 14x73
Nominal Required Bearing: 231k
Factored Resistance Available: 115k
Est. Length: 36'
No. Production Piles: 5
No. Test Piles: 1

Piles shall be driven through 18" diameter precored holes extending to elevation 680.00 according to Article 512.09(c) of the Standard Specifications. Cost included in driving piles.

MINIMUM BAR LAP

#5 bar = 3'-3"
#7 bar = 5'-2"

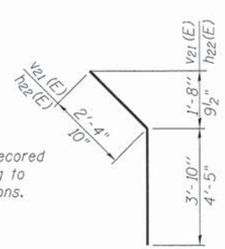

BAR v21(E) & h22(E)

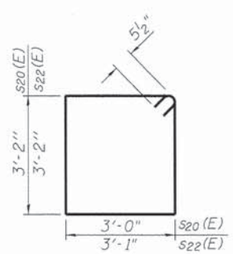

BAR s20(E) & s22(E)

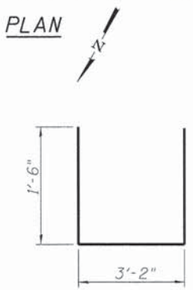

BAR u21(E)

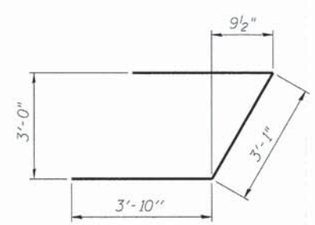

BAR u20(E)

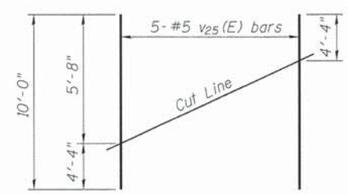

FIELD CUTTING DIAGRAM

Order v25(E) full length. Cut as shown and use remainder of bars in opposite face.

COMPANY NAME: HR GREEN
PROJECT CONTACT: I. SCOTT GREECH, P.E.
CLIENT: VILLAGE OF HINSDALE
DATE PLOTTED: 12/15/2014 1:53:02 PM
FILE NAME: 022_STR_SB_Abut_S-dgn
PLOT DRIVER: pdf.pltr
PEN TABLE: standard-trans.tbl

HRGreen.com Illinois Professional Design Firm # 184-001322	USER NAME = whood	DESIGNED - JMW	REVISED -	STATE OF ILLINOIS DEPARTMENT OF TRANSPORTATION	SOUTH ABUTMENT STRUCTURE NO. 022-6404
HRGreen		CHECKED - RGD	REVISED -		
	PLOT SCALE =	DRAWN - WJH	REVISED -		
	PLOT DATE = 12/15/2014	CHECKED - 12/15/14	REVISED -		SHEET NO. SB-21 OF SB-29 SHEETS

F.A.U. RTE.	SECTION	COUNTY	TOTAL SHEETS	SHEET NO.
2999	10-00089-00-BR	DUPAGE	157	112
		CONTRACT NO. 61B11		
	ILLINOIS FED. AID PROJECT	BRM-9003(699)		

PILE DATA

Type: Steel HP 14x73
Nominal Required Bearing: 531k
Factored Resistance Available: 292k
Est. Length: 3 at 59', 4 at 83'
No. Production Piles: 6
No. Test Piles: 1

Piles shall be driven through 18" diameter precored holes extending to elevation 660.00 according to Article 512.09(c) of the Standard Specifications. Cost included in driving piles.

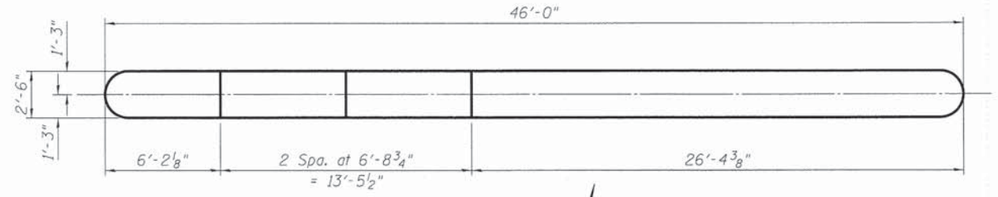

PLAN

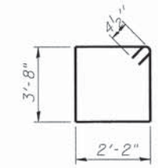

BAR $s_{30}(E)$

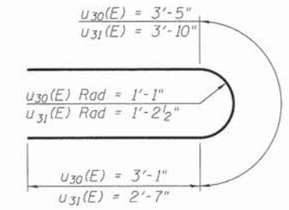

BARS $u_{30}(E)$ & $u_{31}(E)$

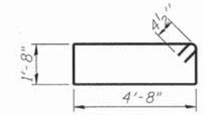

BAR $s_{31}(E)$

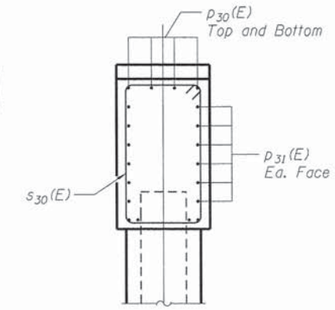

SECTION C-C

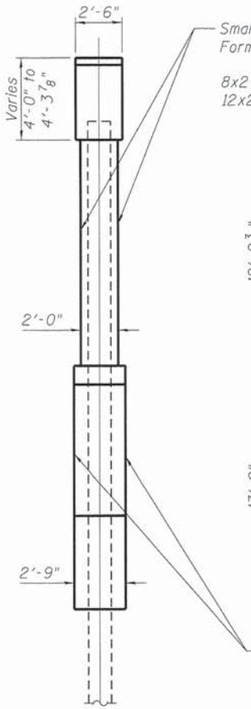

END VIEW

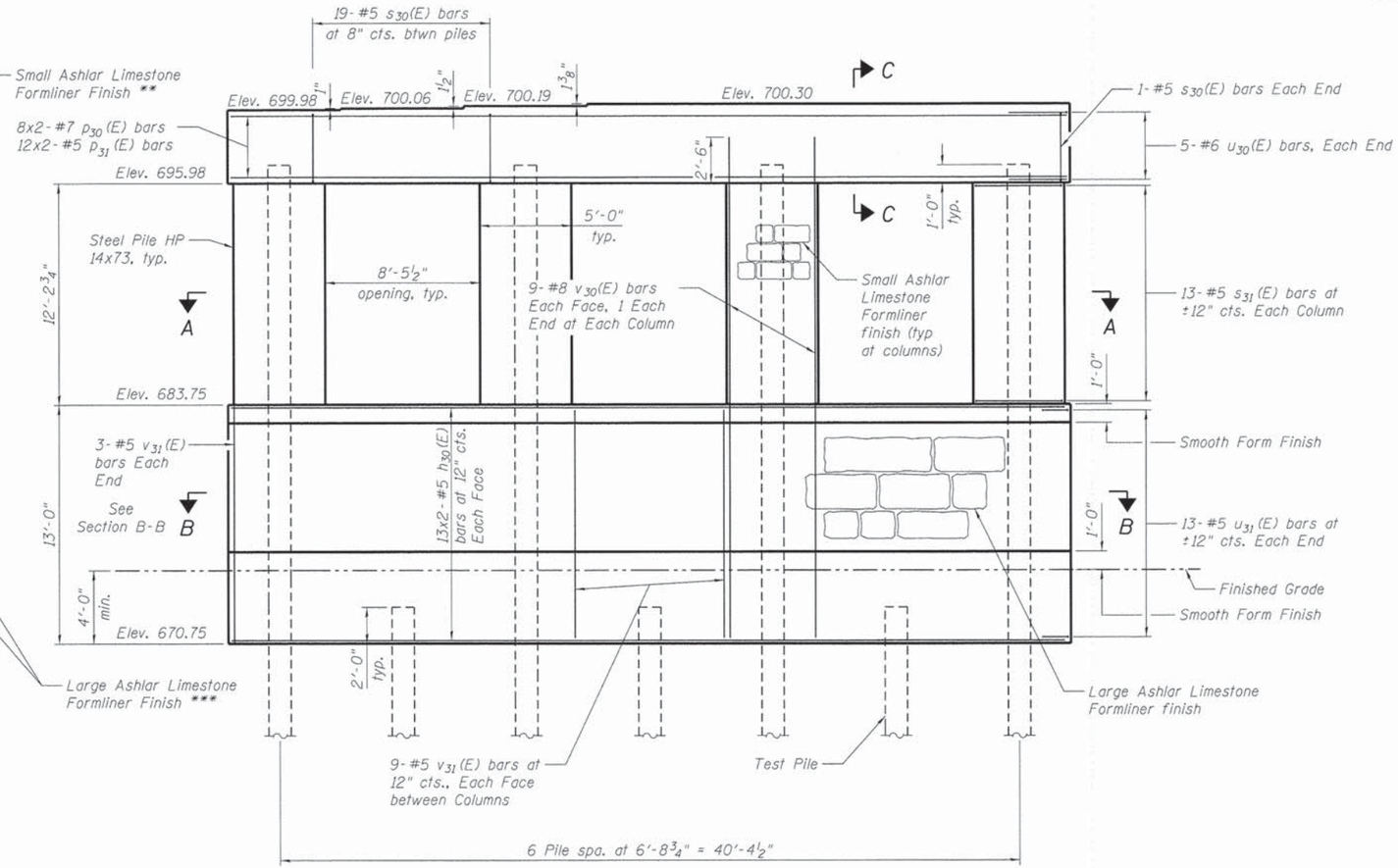

PIER 1 ELEVATION
(looking North)

** Ashlar Limestone Small (4"-6" x 10"-18") pattern, 1/2" relief
*** Ashlar Limestone Large (6"-8" x 18"-30") pattern, 1" relief

BILL OF MATERIALS

Bar	No.	Size	Length	Shape
$h_{30}(E)$	52	#5	24'-8"	
$p_{30}(E)$	16	#7	25'-5"	
$p_{31}(E)$	24	#5	23'-5"	
$s_{30}(E)$	59	#5	12'-5"	
$s_{31}(E)$	52	#5	13'-5"	
$u_{30}(E)$	10	#6	9'-7"	
$u_{31}(E)$	26	#5	9'-0"	
$v_{30}(E)$	80	#8	27'-7"	
$v_{31}(E)$	60	#5	12'-8"	

Structure Excavation	Cu. Yd.	148.5
Concrete Structures	Cu. Yd.	96.7
Form Liner Textured Surface	Sq. Ft.	1,550
Reinforcement Bars, Epoxy Coated	Pound	11,320
Furnishing Steel Piles HP14x73	Foot	450
Test Pile HP14x73	Each	1
Driving	Foot	450
Staining Concrete Structures	Sq. Ft.	1,550

For details of piles see sheet SB-23

MIN. BAR LAP

#5 bar = 3'-3"
#7 bar = 5'-2"

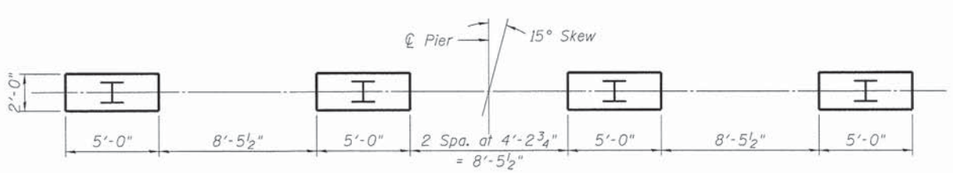

SECTION A-A

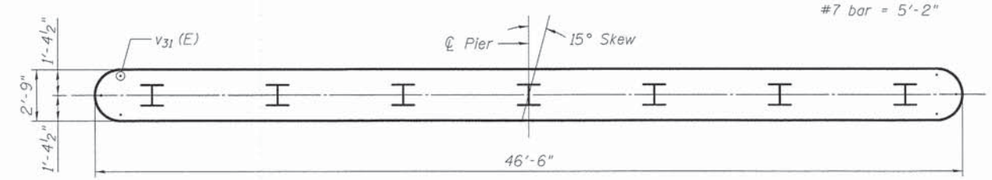

SECTION B-B

COMPANY NAME: HR GREEN
PROJECT CONTACT: T. SCOTT CREECH, P.E.
CLIENT: VILLAGE OF HINSDALE
DATE PLOTTED: 12/15/2014 13:36:05 PM
FILE NAME: 022_STR_SB_Pier1.dgn
PLOT DRIVER: pdf.pltt
PEN TABLE: standard-trans.tbl

HRGreen.com
Illinois Professional Design Firm # 184-001322
HRGreen

USER NAME = whood	DESIGNED - JMW	REVISED -	
	CHECKED - RDG	REVISED -	
PLOT SCALE =	DRAWN - WJH	REVISED -	
PLOT DATE = 12/15/2014	CHECKED - 12/15/14	REVISED -	

STATE OF ILLINOIS
DEPARTMENT OF TRANSPORTATION

PIER 1 DETAILS
STRUCTURE NO. 022-6404

F.A.U. RTE.	SECTION	COUNTY	TOTAL SHEETS	SHEET NO.
2999	10-00089-00-BR	DUPAGE	157	113

CONTRACT NO. 61B11
ILLINOIS FED. AID PROJECT BRM-9003(699)

PILE DATA

Type: Steel HP 14x73
Nominal Required Bearing: 412k
Factored Resistance Available: 226k
Est. Length: 3 at 52', 4 at 76'
No. Production Piles: 6
No. Test Piles: 1

Piles shall be driven through 18" diameter precored holes extending to elevation 660.00 according to Article 512.09(c) of the Standard Specifications. Cost included in driving piles.

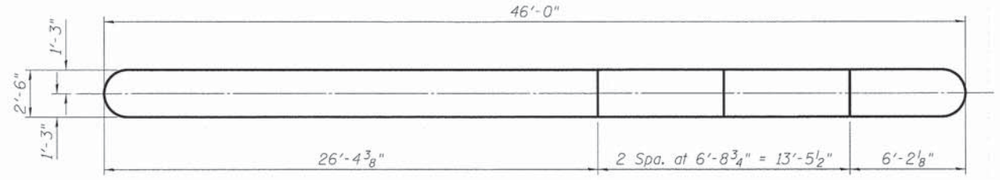

PLAN

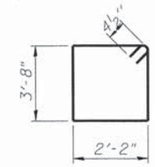

BAR $s_{30}(E)$

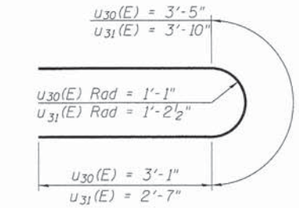

BARS $u_{30}(E)$ & $u_{31}(E)$

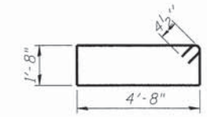

BAR $s_{31}(E)$

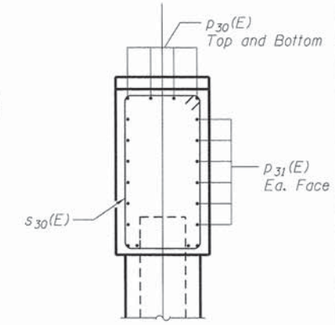

SECTION C-C

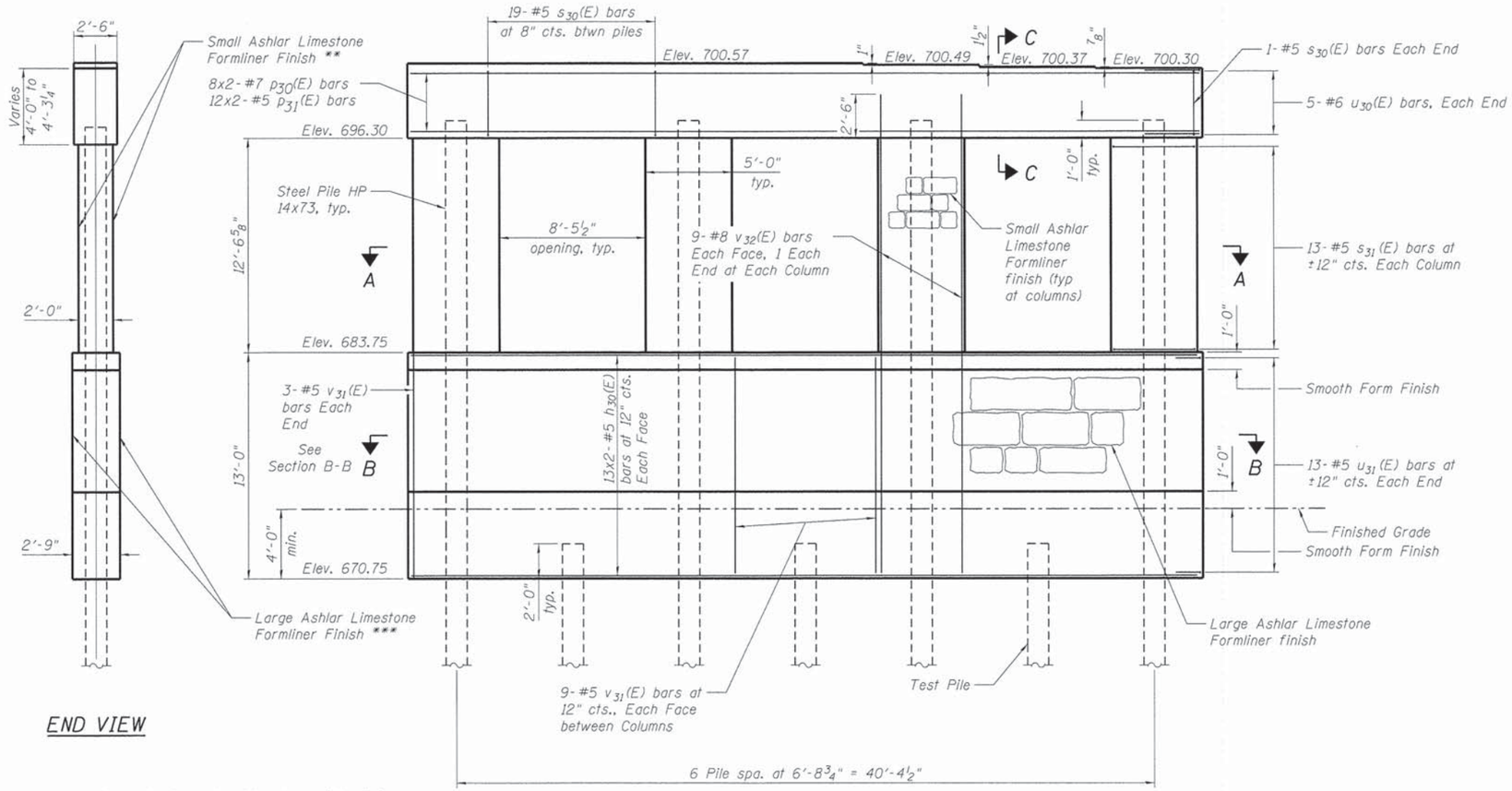

END VIEW

PIER 2 ELEVATION
(looking North)

** Ashlar Limestone Small (4"-6" x 10"-18") pattern, 1/2" relief
*** Ashlar Limestone Large (6"-8" x 18"-30") pattern, 1" relief

BILL OF MATERIALS

Bar	No.	Size	Length	Shape
$h_{30}(E)$	52	#5	24'- 8"	
$p_{30}(E)$	16	#7	25'- 5"	
$p_{31}(E)$	24	#5	23'- 5"	
$s_{30}(E)$	59	#5	12'- 5"	
$s_{31}(E)$	52	#5	13'- 5"	
$u_{30}(E)$	10	#6	9'- 7"	
$u_{31}(E)$	26	#5	9'- 0"	
$v_{31}(E)$	60	#5	12'- 8"	
$v_{32}(E)$	80	#8	27'- 11"	
Structure Excavation			Cu. Yd.	148.5
Concrete Structures			Cu. Yd.	97.0
Form Liner Textured Surface			Sq. Ft.	1,550
Reinforcement Bars, Epoxy Coated			Pound	11,390
Furnishing Steel Piles HP14x73			Foot	408
Test Pile HP14x73			Each	1
Driving			Foot	408
Staining Concrete Structures			Sq. Ft.	1,550

For details of piles see sheet SB-23

MIN. BAR LAP

#5 bar = 3'-3"
#7 bar = 5'-2"

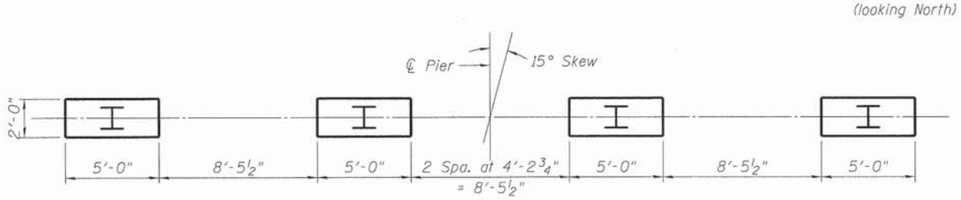

SECTION A-A

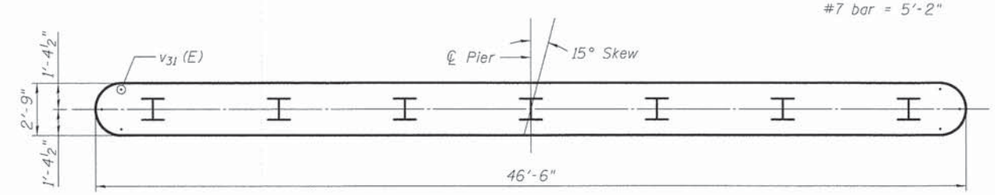

SECTION B-B

COMPANY NAME: HR GREEN
PROJECT CONTACT: T. SCOTT CREECH, P.E.
CLIENT: VILLAGE OF HINSDALE
DATE PLOTTED: 12/15/2014 10:30:07 PM
FILE NAME: 022-STR_SB_Pier2.dgn
PLOT DRIVER: pwl.pltr
PEN TABLE: standard-trans.tbl

HRGreen
HRGreen.com
Illinois Professional Design Firm # 184-001322

USER NAME = whood	DESIGNED - JMW	REVISED -	
	CHECKED - RDG	REVISED -	
PLOT SCALE =	DRAWN - WJH	REVISED -	
PLOT DATE = 12/15/2014	CHECKED - 12/15/14	REVISED -	

STATE OF ILLINOIS
DEPARTMENT OF TRANSPORTATION

PIER 2 DETAILS
STRUCTURE NO. 022-6404

SHEET NO. SB-23 OF SB-29 SHEETS

F.A.U. RTE.	SECTION	COUNTY	TOTAL SHEETS	SHEET NO.
2999	10-00089-00-BR	DUPAGE	157	114
		CONTRACT NO. 61B11		
	ILLINOIS	FED. AID PROJECT	BRM-9003(699)	

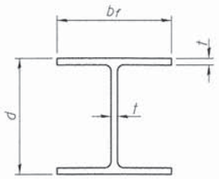

STEEL PILE TABLE

Designation	Depth d	Flange width b_f	Web and Flange thickness t	~~Encasement diameter A~~
HP 14x117	14 1/4"	14 7/8"	13/16"	~~30"~~
x102	14"	14 3/4"	11/16"	~~30"~~
x89	13 7/8"	14 3/4"	5/8"	~~30"~~
x73	13 5/8"	14 5/8"	1/2"	~~30"~~
HP 12x84	12 1/4"	12 1/4"	11/16"	~~24"~~
x74	12 1/8"	12 1/4"	5/8"	~~24"~~
x63	12"	12 1/8"	1/2"	~~24"~~
x53	11 3/4"	12"	7/16"	~~24"~~
HP 10x57	10"	10 1/4"	9/16"	~~24"~~
x42	9 3/4"	10 1/8"	7/16"	~~24"~~
HP 8x36	8"	8 1/8"	7/16"	~~18"~~

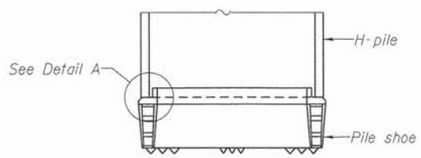

ELEVATION

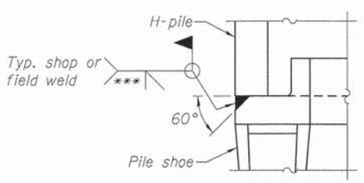

DETAIL A

H-PILE SHOE ATTACHMENT

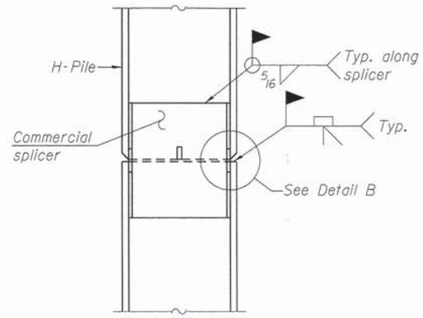

ELEVATION

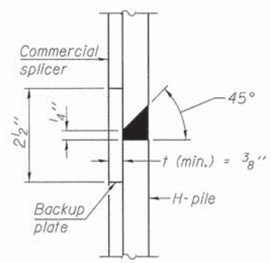

DETAIL "B"

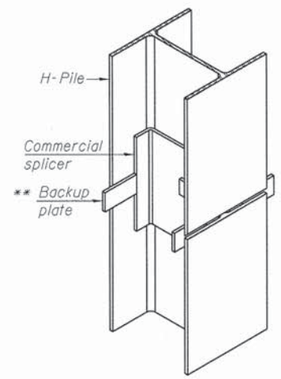

ISOMETRIC VIEW

WELDED COMMERCIAL SPLICE

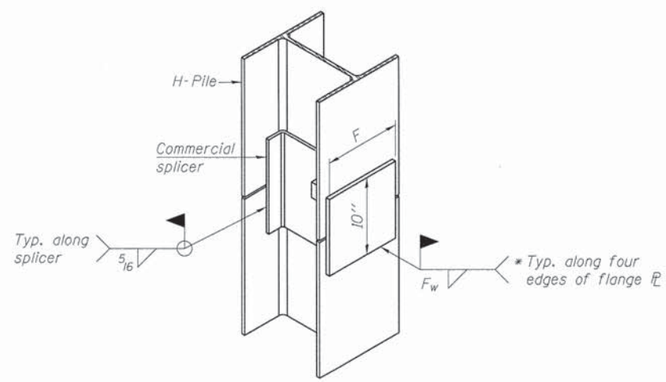

ISOMETRIC VIEW

WELDED COMMERCIAL SPLICE ALTERNATE

* Interrupt welds 1/4" from end of web and/or each flange.

** Remove portions of backup plates that extend outside the flanges.

*** Weld size per pile shoe manufacturer (5/16" min.).

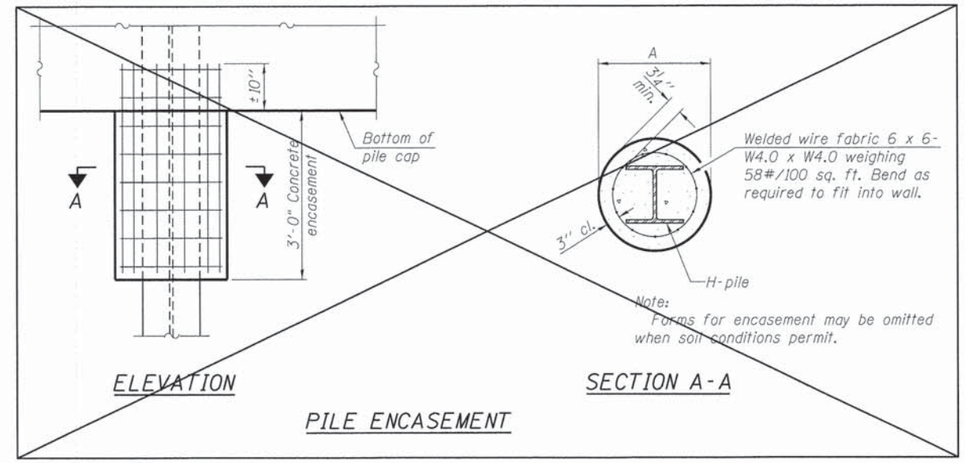

ELEVATION

SECTION A-A

PILE ENCASEMENT

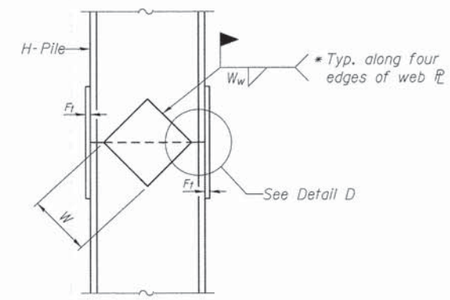

ELEVATION

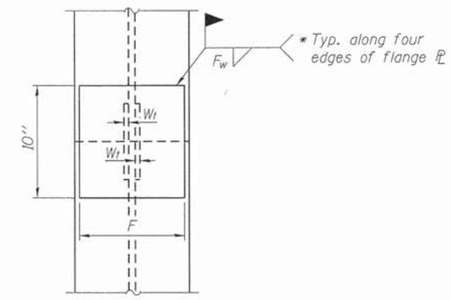

END VIEW

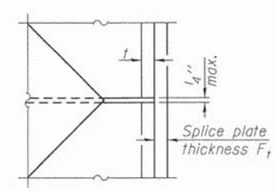

DETAIL D

Designation	F	F_t	F_w	W	W_t	W_w
HP 14x117	12 1/2"	1"	7/8"	7 3/4"	5/8"	1/2"
x102	12 1/2"	7/8"	3/4"	7 3/4"	5/8"	1/2"
x89	12 1/2"	3/4"	11/16"	7 3/4"	5/8"	1/2"
x73	12 1/2"	5/8"	9/16"	7 3/4"	5/8"	1/2"
HP 12x84	10"	7/8"	11/16"	6 1/2"	5/8"	1/2"
x74	10"	7/8"	11/16"	6 1/2"	5/8"	1/2"
x63	10"	5/8"	1/2"	6 1/2"	1/2"	3/8"
x53	10"	5/8"	1/2"	6 1/2"	1/2"	3/8"
HP 10x57	8"	3/4"	9/16"	5 1/4"	1/2"	3/8"
x42	8"	5/8"	9/16"	5 1/4"	1/2"	3/8"
HP 8x36	7"	5/8"	7/16"	4 1/4"	1/2"	3/8"

WELDED PLATE FIELD SPLICE

Note:
The steel H-piles shall be according to AASHTO M270 Grade 50.

F-HP 1-27-12

HRGreen.com
Illinois Professional Design Firm # 184-001322

USER NAME = whood	DESIGNED - JMW	REVISED -	
	CHECKED - RDG	REVISED -	
PLOT SCALE =	DRAWN - WJH	REVISED -	
PLOT DATE = 12/15/2014	CHECKED - 12/15/14	REVISED -	

STATE OF ILLINOIS
DEPARTMENT OF TRANSPORTATION

HP PILE DETAILS
STRUCTURE NO. 022-6404

SHEET NO. SB-24 OF SB-29 SHEETS

F.A.U. RTE.	SECTION	COUNTY	TOTAL SHEETS	SHEET NO.
2999	10-00089-00-BR	DUPAGE	157	115

CONTRACT NO. 61B11

ILLINOIS FED. AID PROJECT BRM-9003(699)

COMPANY NAME: HR GREEN
PROJECT CONTACT: T. SCOTT GREEN, P.E.
CLIENT: VILLAGE OF HINSDALE
DATE PLOTTED: 12/15/2014 15:30:9 PM
FILE NAME: 032_STR_SB_Piles.dgn
PLOT DRIVER: pdf.pltr
PEN TABLE: standard-trans.tbl

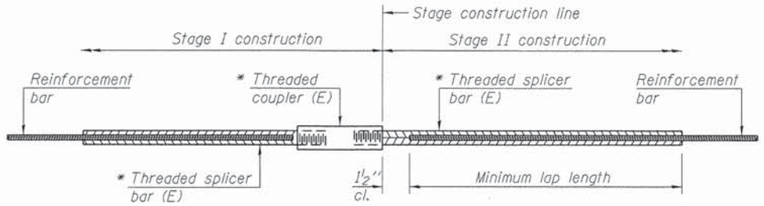

STANDARD BAR SPLICER ASSEMBLY

Minimum Lap Lengths						
Bar size to be spliced	Table 1	Table 2	Table 3	Table 4	Table 5	Table 6
3, 4	1'-5"	1'-11"	2'-1"	2'-4"	2'-7"	2'-11"
5	1'-9"	2'-5"	2'-7"	2'-11"	3'-3"	3'-8"
6	2'-1"	2'-11"	3'-1"	3'-6"	3'-10"	4'-5"
7	2'-9"	3'-10"	4'-2"	4'-8"	5'-2"	5'-10"
8	3'-8"	5'-1"	5'-5"	6'-2"	6'-9"	7'-8"
9	4'-7"	6'-5"	6'-10"	7'-9"	8'-7"	9'-8"

Table 1: Black bar, 0.8 Class C
Table 2: Black bar, Top bar lap, 0.8 Class C
Table 3: Epoxy bar, 0.8 Class C
Table 4: Epoxy bar, Top bar lap, 0.8 Class C
Table 5: Epoxy bar, Class C
Table 6: Epoxy bar, Top bar top, Class C

Threaded splicer bar length = min. lap length + 1½" + thread length

* Epoxy not required on Bar Splicer Assembly components used in conjunction with black bars.

Location	Bar size	No. assemblies required	Table for minimum lap length

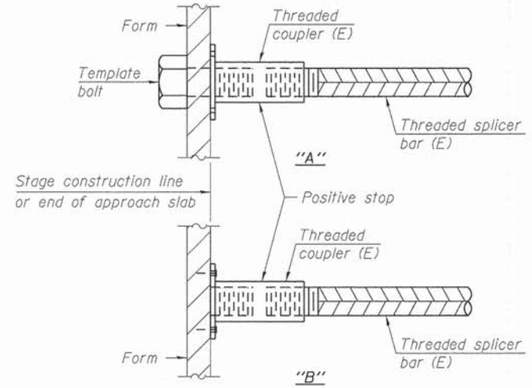

INSTALLATION AND SETTING METHODS

"A" : Set bar splicer assembly by means of a template bolt.
"B" : Set bar splicer assembly by nailing to wood forms or cementing to steel forms.
(E) : Indicates epoxy coating.

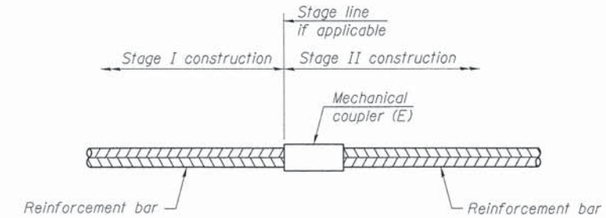

STANDARD MECHANICAL SPLICER

Location	Bar size	No. assemblies required

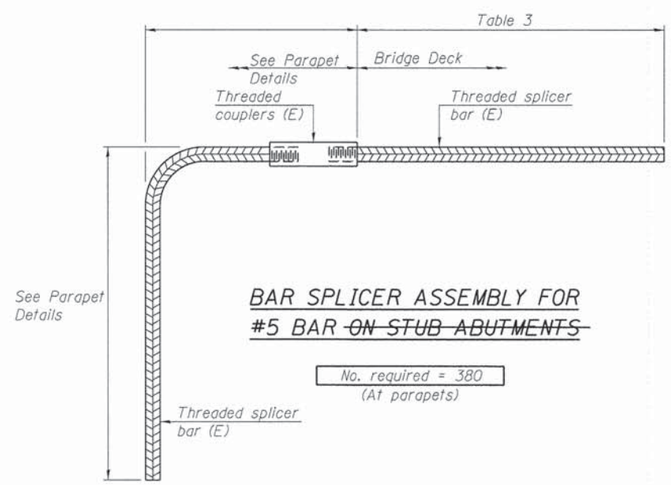

BAR SPLICER ASSEMBLY FOR #5 BAR ~~ON STUB ABUTMENTS~~

No. required = 380
(At parapets)

NOTES

Splicer bars shall be deformed with threaded ends and have a minimum 60 ksi yield strength.

All reinforcement shall be lapped and tied to the splicer bars.

Bar splicer assemblies shall be epoxy coated according to the requirements for reinforcement bars. See Section 508 of the Standard Specifications.

See approved list of bar splicer assemblies and mechanical splicers for alternatives.

BSD-1

8-31-12

COMPANY NAME: HR GREEN
PROJECT CONTACT: T. SCOTT CREECH, P.E.
CLIENT: VILLAGE OF HINSDALE
DATE PLOTTED: 12/16/2014 9:29:25 AM
FILE NAME: 032-STR-SB-Bar-Splicer.dgn
PLOT DRIVER: pdf.pltr
PEN TABLE: standard-trans.tbl

HRGreen.com
Illinois Professional Design Firm # 184-001322
HRGreen

USER NAME = dstancz	DESIGNED - JMW	REVISED -	
	CHECKED - RDG	REVISED -	
PLOT SCALE =	DRAWN - WJH	REVISED -	
PLOT DATE = 12/16/2014	CHECKED - 12/16/14	REVISED -	

STATE OF ILLINOIS
DEPARTMENT OF TRANSPORTATION

BAR SPLICER ASSEMBLY AND MECHANICAL SPLICER DETAILS
STRUCTURE NO. 022-6404

SHEET NO. SB-25 OF SB-29 SHEETS

F.A.U. RTE.	SECTION	COUNTY	TOTAL SHEETS	SHEET NO.
2999	10-00089-00-BR	DUPAGE	157	116

CONTRACT NO. 61B11
ILLINOIS FED. AID PROJECT BRM-9003(699)

Wang Engineering
wangeng@wangeng.com
1145 N Main Street
Lombard, IL 60148
Telephone: 630 953-9928
Fax: 630 953-9938

BORING LOG BB-01

WEI Job No.: 373-19-01

Client: Clark Dietz, Inc.
Project: Oak Street Bridge Replacement
Location: Hinsdale, DuPage Co., IL

Datum: NAV88
Elevation: 692.70 ft
North: 1871657.75 ft
East: 1096944.74 ft
Station: 10008+16.0
Offset: 7.8 RT

Elevation (ft)	SOIL AND ROCK DESCRIPTION	Depth (ft)	Sample Type / recovery	Sample No.	SPT Values (blw/6 in)	Qu (tsf)	Moisture Content (%)
692.4	3-inch thick ASPHALT --PAVEMENT--						
691.8	8-inch thick CRUSHED STONE --AGGREGATE BASE--						
	Medium stiff, brown and gray CLAY LOAM, trace gravel --FILL--			1	2 3 3	0.50 P	21
		5		2	1 3 4	0.82 B	24
687.2	Very stiff to hard, SILTY CLAY LOAM, trace gravel			3	6 10 13	5.74 B	16
		10		4	5 6 8	3.44 B	20
		15		5	5 7 9	4.18 B	17
				6	5 5 6	2.05 B	16
		20		7	5 7 8	3.69 B	16
674.7	Medium dense, brown SANDY LOAM, little gravel			8	4 6 6	NP	13
672.2	Stiff, gray SILTY LOAM, little to some gravel, possible cobbles			9	8 9 8	1.48 B	11
	--HARD DRILLING--	25		10	7 13 12	1.25 P	12
		30		11	11 6 7	1.50 P	11
		35		12	2 3 4	1.31 B	15
660.7	Medium dense to dense, gray SANDY LOAM to SAND, little to some gravel and cobbles			13	8 12 8	NP	11
	--ROCK FRAGMENTS-- --Moisture Content NA--	40		14	12 21 14	NP	

GENERAL NOTES

Begin Drilling: 03-01-2012 Complete Drilling: 03-01-2012
Drilling Contractor: Wang Testing Services Drill Rig: D-50 ATV
Driller: K&K Logger: F. Bozga Checked by: M. Snider
Drilling Method: 3.25 IDA HSA; Boring backfilled upon completion

WATER LEVEL DATA

While Drilling: DRY
At Completion of Drilling: MUD
Time After Drilling: NA
Depth to Water: NA

The stratification lines represent the approximate boundary between soil types; the actual transition may be gradual.

WANGENGINC 373191.GPJ WANGENG.GDT 4/26/12

Wang Engineering
wangeng@wangeng.com
1145 N Main Street
Lombard, IL 60148
Telephone: 630 953-9928
Fax: 630 953-9938

BORING LOG BB-01

WEI Job No.: 373-19-01

Client: Clark Dietz, Inc.
Project: Oak Street Bridge Replacement
Location: Hinsdale, DuPage Co., IL

Datum: NAV88
Elevation: 692.70 ft
North: 1871657.75 ft
East: 1096944.74 ft
Station: 10008+16.0
Offset: 7.8 RT

Elevation (ft)	SOIL AND ROCK DESCRIPTION	Depth (ft)	Sample Type / recovery	Sample No.	SPT Values (blw/6 in)	Qu (tsf)	Moisture Content (%)
	--HARD DRILLING--	45		15	13 17 11	NP	9
645.7	Dense, gray SILTY LOAM, little gravel	50		16	7 18 28	NP	9
641.2	Very dense, brown GRAVELLY SAND	55		17	48 40 42	NP	7
636.2	Weathered dolostone fragments --WEATHERED BEDROCK-- --HARD DRILLING--						
633.7	RUN #1 - 59' to 64' Strong, very poor rock quality,	60		18	50/3 C	NP	
	light brownish to light gray, vuggy, thinly banded, moderately to slightly weathered, very intensely to intensely fractured, cherty DOLOSTONE RECOVERY = 100% RQD = 0%			1	CORE		
	RUN #2 - 64' to 69' Strong, poor rock quality, light gray, thinly banded, fresh, intensely fractured, cherty DOLOSTONE RECOVERY = 100% RQD = 33%	65		2	CORE		
623.7	Boring terminated at 69.00 ft	70					
		75					
		80					

GENERAL NOTES

Begin Drilling: 03-01-2012 Complete Drilling: 03-01-2012
Drilling Contractor: Wang Testing Services Drill Rig: D-50 ATV
Driller: K&K Logger: F. Bozga Checked by: M. Snider
Drilling Method: 3.25 IDA HSA; Boring backfilled upon completion

WATER LEVEL DATA

While Drilling: DRY
At Completion of Drilling: MUD
Time After Drilling: NA
Depth to Water: NA

The stratification lines represent the approximate boundary between soil types; the actual transition may be gradual.

WANGENGINC 373191.GPJ WANGENG.GDT 4/26/12

COMPANY NAME: HR GREEN
PROJECT CONTACT: T. SCOTT OREEN, P.E.
CLIENT: VILLAGE OF HINSDALE
DATE PLOTTED: 12/15/2014 1:53:14 PM
FILE NAME: 022-2798-38-3801.dgn
PLOT DRIVER: pdf.pltf
PEN TABLE: standard-trans.tbl

HRGreen.com
Illinois Professional Design Firm # 184-001322
HRGreen

USER NAME = whood	DESIGNED - JMW	REVISED -	
	CHECKED - RDG	REVISED -	
PLOT SCALE =	DRAWN - WJH	REVISED -	
PLOT DATE = 12/15/2014	CHECKED - 12/15/14	REVISED -	

STATE OF ILLINOIS
DEPARTMENT OF TRANSPORTATION

SOIL BORING LOGS
STRUCTURE NO. 022-6404

SHEET NO. SB-26 OF SB-29 SHEETS

F.A.U. RTE.	SECTION	COUNTY	TOTAL SHEETS	SHEET NO.
2999	10-00089-00-BR	DUPAGE	157	117

CONTRACT NO. 61B11

ILLINOIS FED. AID PROJECT BRM-9003(699)

Wang Engineering
wangeng@wangeng.com
1145 N Main Street
Lombard, IL 60148
Telephone: 630 953-9928
Fax: 630 953-9938

BORING LOG BB-4A

WEI Job No.: 373-19-01

Client: Clark Dietz, Inc.
Project: Oak Street Bridge Replacement
Location: Hinsdale, DuPage Co., IL

Datum: NAV88
Elevation: 693.82 ft
North: 1871806.19 ft
East: 1096947.71 ft
Station: 10009+64.2
Offset: 16.8 RT

Elev. (ft)	SOIL AND ROCK DESCRIPTION	Depth (ft)	Sample Type / recovery	Sample No.	SPT Values (blw/6 in)	Qu (tsf)	Moisture Content (%)
693.2	7-inch thick ASPHALT --PAVEMENT--						
692.9	5-inch thick CRUSHED STONE --AGGREGATE BASE--						
	Stiff, brown CLAY LOAM, trace gravel --FILL--			1	5 4 6	1.75 P	29
		5		2	2 3 5	1.50 P	20
688.3	Very stiff to hard, brown and gray SILTY CLAY, trace gravel			3	8 9 13	4.92 B	15
		10		4	8 8 12	4.35 B	16
				5	6 8 10	3.28 B	17
		15		6	4 8 10	2.95 B	17
678.3	--HARD DRILLING-- Loose, brown GRAVELLY SAND			7	11 5 4	NA	
	--HARD DRILLING--	20		8	3 5 4	NP	19
673.3	Very stiff to hard, gray SILTY LOAM, little to some gravel			9	3 7 10	1.50 P	13
		25		10	5 10 7	3.00 P	11
				11	11 12 11	4.59 B	12
	--L_L = 20%, P_L = 13% --% Gravel = 17.2%-- --% Sand = 21.9%-- --% Silt = 46.4%-- --% Clay = 14.5%--	30		12	7 6 8	1.58 B	11
		35		13	5 7 8	4.35 B	15
		40		14	5 7 8	2.13 B	14

GENERAL NOTES

Begin Drilling: 03-05-2012 Complete Drilling: 03-05-2012
Drilling Contractor: Wang Testing Services Drill Rig: D-50 ATV
Driller: K&K Logger: F. Bozga Checked by: M. Snider
Drilling Method: 3.25 IDA HSA; Boring backfilled upon completion

WATER LEVEL DATA

While Drilling: 18.00 ft
At Completion of Drilling: 30.00 ft
Time After Drilling: NA
Depth to Water: NA

The stratification lines represent the approximate boundary between soil types; the actual transition may be gradual.

Wang Engineering
wangeng@wangeng.com
1145 N Main Street
Lombard, IL 60148
Telephone: 630 953-9928
Fax: 630 953-9938

BORING LOG BB-4A

WEI Job No.: 373-19-01

Client: Clark Dietz, Inc.
Project: Oak Street Bridge Replacement
Location: Hinsdale, DuPage Co., IL

Datum: NAV88
Elevation: 693.82 ft
North: 1871806.19 ft
East: 1096947.71 ft
Station: 10009+64.2
Offset: 16.8 RT

Elev. (ft)	SOIL AND ROCK DESCRIPTION	Depth (ft)	Sample Type / recovery	Sample No.	SPT Values (blw/6 in)	Qu (tsf)	Moisture Content (%)
651.8	Medium dense, gray SILTY LOAM, some gravel						
	--L_L = NP, P_L = NP --% Gravel = 10.6%-- --% Sand = 23.0%-- --% Silt = 59.6%-- --% Clay = 6.8%--	45		15	7 8 9	NP	11
		50		16	8 13 12	NP	12
642.3	Dense to very dense, SANDY GRAVEL						
		55		17	42 29 14	NP	8
		60		18	23 22 50/2	NP	11
629.8	RUN #1 - 64' to 74' Strong, poor rock quality, light gray and white, fresh, intensely fractured, occasionally vuggy, cherty DOLOSTONE RECOVERY = 97.5% RQD = 12.5%	65	CORE	1			
		70					
619.8	Boring terminated at 74.00 ft	75					
		80					

GENERAL NOTES

Begin Drilling: 03-05-2012 Complete Drilling: 03-05-2012
Drilling Contractor: Wang Testing Services Drill Rig: D-50 ATV
Driller: K&K Logger: F. Bozga Checked by: M. Snider
Drilling Method: 3.25 IDA HSA; Boring backfilled upon completion

WATER LEVEL DATA

While Drilling: 18.00 ft
At Completion of Drilling: 30.00 ft
Time After Drilling: NA
Depth to Water: NA

The stratification lines represent the approximate boundary between soil types; the actual transition may be gradual.

WANGENGINC 373191 GPJ WANGENG GDT 4/24/12

COMPANY NAME: HR GREEN
PROJECT CONTACT: T. SCOTT OREGON, P.E.
CLIENT: VILLAGE OF HINSDALE
DATE PLOTTED: 12/15/2014 15:32:4 PM
FILE NAME: 032_STR_SB_5802.dgn
PLOT DRIVER: pdf.pltl
PEN TABLE: standard-trans.tbl

HRGreen
HRGreen.com
Illinois Professional Design Firm # 184-001322

USER NAME = whood	DESIGNED - JMW	REVISED -	
	CHECKED - RDG	REVISED -	
PLOT SCALE =	DRAWN - WJH	REVISED -	
PLOT DATE = 12/15/2014	CHECKED - 12/15/14	REVISED -	

STATE OF ILLINOIS
DEPARTMENT OF TRANSPORTATION

SOIL BORING LOGS
STRUCTURE NO. 022-6404
SHEET NO. SB-27 OF SB-29 SHEETS

F.A.U. RTE.	SECTION	COUNTY	TOTAL SHEETS	SHEET NO.
2999	10-00089-00-BR	DUPAGE	157	118

CONTRACT NO. 61B11
ILLINOIS FED. AID PROJECT BRM-9003(699)

Wang Engineering
wangeng@wangeng.com
1145 N Main Street
Lombard, IL 60148
Telephone: 630 953-9928
Fax: 630 953-9938

BORING LOG HA-2A Top

WEI Job No.: 373-19-01

Client: Clark Dietz, Inc.
Project: Oak Street Bridge Replacement
Location: Hinsdale, DuPage Co., IL

Datum: NAV88
Elevation: 684.50 ft
North: 1871694.08 ft
East: 1096927.74 ft
Station: 10008+53.0
Offset: 7.7 LT

Profile	Elevation (ft)	SOIL AND ROCK DESCRIPTION	Depth (ft)	Sample Type / recovery	Sample No.	SPT Values (blw/6 in)	Qu (tsf)	Moisture Content (%)
	684.0	6-inch thick, brown SILTY CLAY LOAM --FILL--			1	PUSH	1.00 P	18
		Brown CLAY LOAM --FILL--			2	PUSH	3.50 P	17
			5		3	PUSH	3.00 P	17
					4	PUSH	2.00 P	17
	674.5		10		5	PUSH	2.00 P	15
		Boring terminated at 10.00 ft						
			15					
			20					

GENERAL NOTES

Begin Drilling: 04-17-2012 Complete Drilling: 04-17-2012
Drilling Contractor: Wang Testing Services Drill Rig: Jack
Driller: N&C Logger: N.Boddy Checked by: M. Snider
Drilling Method: Pneumatic Geoprobe 2" Continuous

WATER LEVEL DATA

While Drilling: DRY
At Completion of Drilling: DRY
Time After Drilling: NA
Depth to Water: NA

The stratification lines represent the approximate boundary between soil types; the actual transition may be gradual.

WANGENGINC 373190 1.GPJ WANGENG.GDT 4/24/12

Wang Engineering
wangeng@wangeng.com
1145 N Main Street
Lombard, IL 60148
Telephone: 630 953-9928
Fax: 630 953-9938

BORING LOG HA-3A Top

WEI Job No.: 373-19-01

Client: Clark Dietz, Inc.
Project: Oak Street Bridge Replacement
Location: Hinsdale, DuPage Co., IL

Datum: NAV88
Elevation: 688.00 ft
North: 1871780.93 ft
East: 1096928.71 ft
Station: 10009+349.7
Offset: 3.2 LT

Profile	Elevation (ft)	SOIL AND ROCK DESCRIPTION	Depth (ft)	Sample Type / recovery	Sample No.	SPT Values (blw/6 in)	Qu (tsf)	Moisture Content (%)
		Brown SANDY LOAM --FILL--			1	PUSH	NP	13
	686.0	Brown CLAY LOAM --FILL--			2	PUSH	3.00 P	14
			5		3	PUSH	3.00 P	14
					4	PUSH	4.50 P	16
	678.0		10		5	PUSH	3.50 P	16
		Boring terminated at 10.00 ft						
			15					
			20					

GENERAL NOTES

Begin Drilling: 04-17-2012 Complete Drilling: 04-17-2012
Drilling Contractor: Wang Testing Services Drill Rig: Jack
Driller: N&C Logger: N.Boddy Checked by: M. Snider
Drilling Method: Pneumatic Geoprobe 2" Continuous

WATER LEVEL DATA

While Drilling: DRY
At Completion of Drilling: DRY
Time After Drilling: NA
Depth to Water: NA

The stratification lines represent the approximate boundary between soil types; the actual transition may be gradual.

WANGENGINC 373190 1.GPJ WANGENG.GDT 4/24/12

COMPANY NAME: HR GREEN
PROJECT CONTACT: T. SCOTT CREECH, P.E.
CLIENT: VILLAGE OF HINSDALE
DATE PLOTTED: 12/15/2014 1:53:34 PM
FILE NAME: 022-STR-SB-5803.dgn
PLOT DRIVER: pdf.pltr
PEN TABLES: standard-hrgreen.tbl

HRGreen.com
Illinois Professional Design Firm # 184-001322

USER NAME = whood	DESIGNED - JMW	REVISED -	
	CHECKED - RDG	REVISED -	
PLOT SCALE =	DRAWN - WJH	REVISED -	
PLOT DATE = 12/15/2014	CHECKED - 12/15/14	REVISED -	

STATE OF ILLINOIS
DEPARTMENT OF TRANSPORTATION

SOIL BORING LOGS
STRUCTURE NO. 022-6404

SHEET NO. SB-28 OF SB-29 SHEETS

F.A.U. RTE.	SECTION	COUNTY	TOTAL SHEETS	SHEET NO.
2999	10-00089-00-BR	DUPAGE	157	119

CONTRACT NO. 61B11
ILLINOIS FED. AID PROJECT BRM-9003(699)

Wang Engineering
wangeng@wangeng.com
1145 N Main Street
Lombard, IL 60148
Telephone: 630 953-9928
Fax: 630 953-9938

BORING LOG HA-3A Bottom

WEI Job No.: 373-19-01

Client: Clark Dietz, Inc.
Project: Oak Street Bridge Replacement
Location: Hinsdale, DuPage Co., IL

Datum: NAV88
Elevation: 680.25 ft
North: 1871766.88 ft
East: 1096928.18 ft
Station: 10009+25.7
Offset: 4.3 LT

Profile	Elevation (ft)	SOIL AND ROCK DESCRIPTION	Depth (ft)	Sample Type / Recovery	Sample No.	SPT Values (blw/6 in)	Qu (tsf)	Moisture Content (%)
		18-inch thick; brown SILTY CLAY LOAM --FILL--			1	PUSH	1.50 P	15
	678.8	Brown CLAY LOAM --FILL--			2	PUSH	2.50 P	19
	674.3		5		3	PUSH	4.00 P	15
	674.0	Brown SAND						
	672.8	Brown SANDY LOAM			4	PUSH	NP	16
	670.3	Brown and gray SILTY CLAY LOAM	10		5	PUSH	0.50 P	16
		Boring terminated at 10.00 ft	15					
			20					

GENERAL NOTES

Begin Drilling: 04-17-2012 Complete Drilling: 04-17-2012
Drilling Contractor: Wang Testing Services Drill Rig: Jack
Driller: N&C Logger: N.Boddy Checked by: M. Snider
Drilling Method: Pneumatic Geoprobe 2' Continuous

WATER LEVEL DATA

While Drilling: DRY
At Completion of Drilling: DRY
Time After Drilling: NA
Depth to Water: NA

The stratification lines represent the approximate boundary between soil types; the actual transition may be gradual.

WANGENGINC 373191.GPJ WANGENG.GDT 4/30/12

COMPANY NAME: HR GREEN
PROJECT CONTACT: T. SCOTT CREECH, P.E.
CLIENT: VILLAGE OF HINDSDALE
DATE PLOTTED: 12/15/2014 10:34:43 PM
FILE NAME: D32_STR_38_3804.dgn
PLOT SCALE: 1:40
PLOT TABLES: standard-trans.tbl

HRGreen.com
Illinois Professional Design Firm # 184-001322

USER NAME = whood	DESIGNED - JMW	REVISED -
	CHECKED - RDG	REVISED -
PLOT SCALE =	DRAWN - WJH	REVISED -
PLOT DATE = 12/15/2014	CHECKED - 12/15/14	REVISED -

STATE OF ILLINOIS
DEPARTMENT OF TRANSPORTATION

SOIL BORING LOGS
STRUCTURE NO. 022-6404

SHEET NO. SB-29 OF SB-29 SHEETS

F.A.U. RTE.	SECTION	COUNTY	TOTAL SHEETS	SHEET NO.
2999	10-00089-00-BR	DUPAGE	157	120

CONTRACT NO. 61B11
ILLINOIS FED. AID PROJECT BRM-9003(699)

Benchmark:
Survey disc located at the southeast corner of Oak Street and Chicago Avenue (NGS Marker K53, Elev. 676.86, NAVD 88)

Existing Structure: None

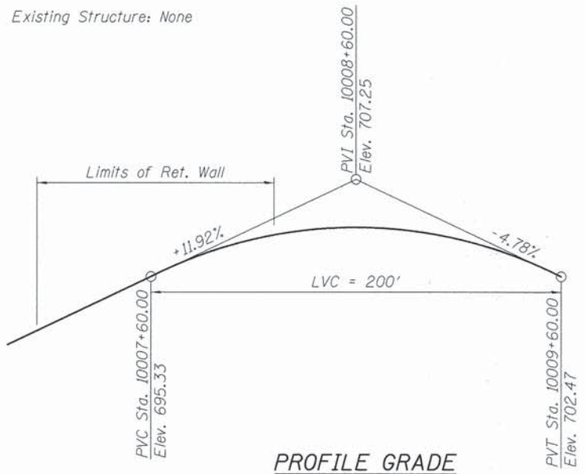

PROFILE GRADE

(along ℄ of Roadway)

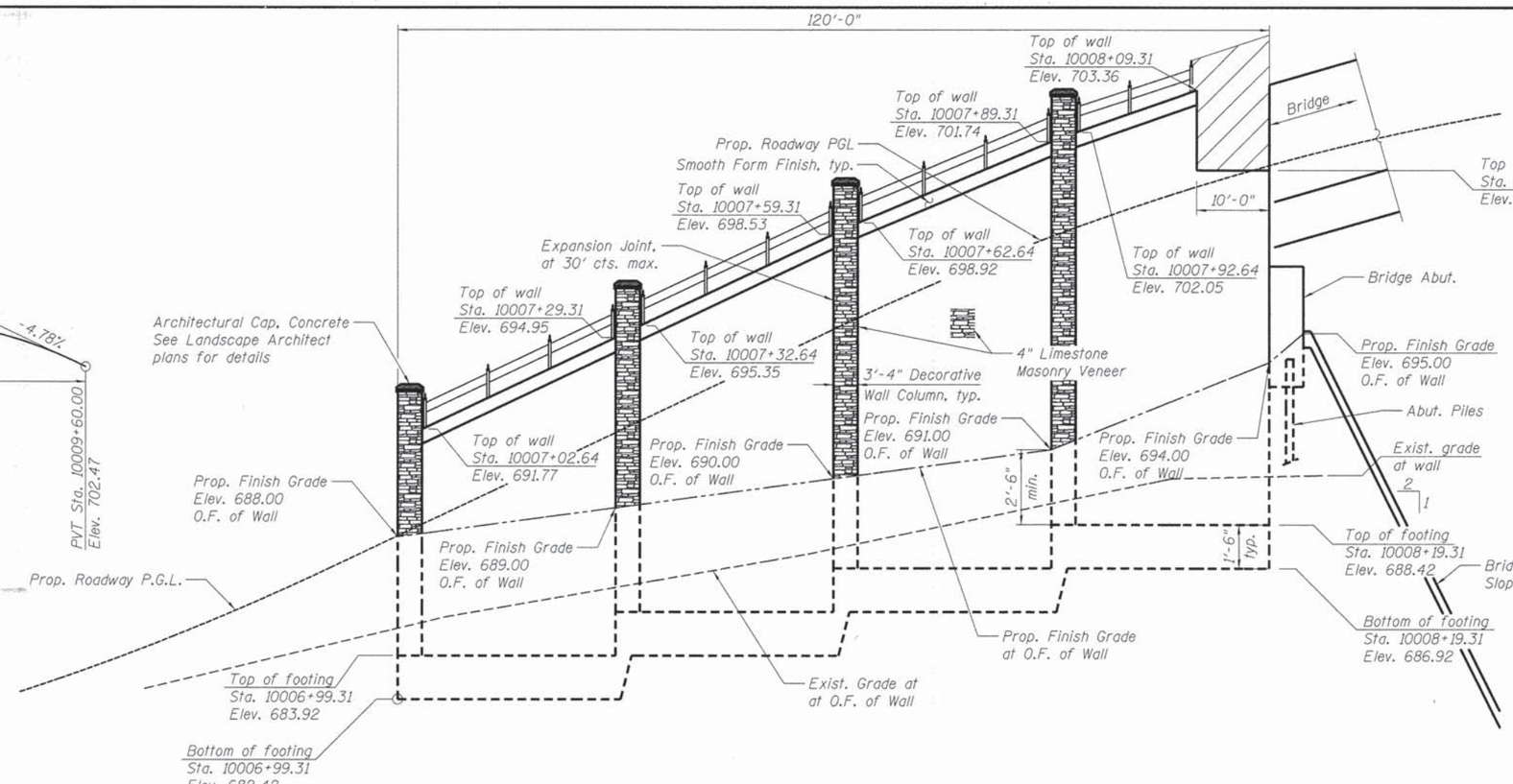

ELEVATION

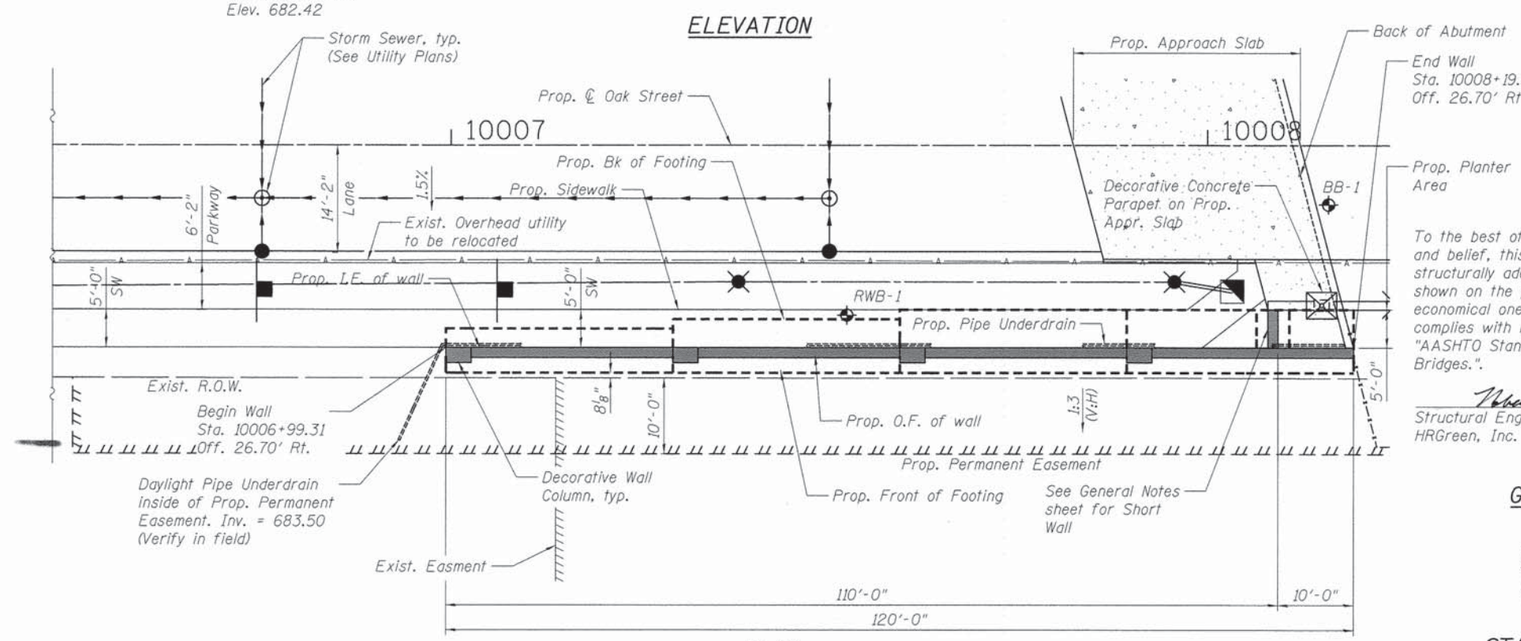

PLAN

N

DESIGN SPECIFICATIONS

2012 AASHTO LRFD Bridge Design Specifications, 6th Edition

DESIGN STRESSES

FIELD UNITS

f'c = 3,500 psi
fy = 60,000 psi (Reinforcement)

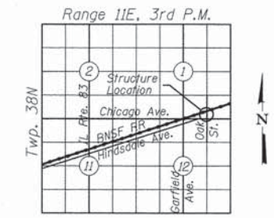

LOCATION SKETCH

LEGEND

- ✦ = Soil Boring Locations
- I.F. = Inside Face
- O.F. = Outside Face
- = Decorative Concrete Parapet on Approach Slab behind wall See Bridge drawings
- = Approach Slab (Plan View)

NOTE:

- Wall offsets are to I.F. of wall

To the best of my knowledge, information and belief, this retaining wall design is structurally adequate for the design loading shown on the plans. The design is an economical one for the style of structure and complies with requirements of the current "AASHTO Standard Specifications for Highway Bridges.".

12/15/2014
Structural Engineer — Expires: 11/30/2016
HRGreen, Inc.

STATE OF ILLINOIS — ROBERT G. DAVIES — 081-004666 — McHENRY, IL — LICENSED STRUCTURAL ENGINEER

GENERAL PLAN AND ELEVATION
RETAINING WALL
OAK STREET (FAU RTE. 2999)
SECTION NO. 10-00089-00-BR
DUPAGE COUNTY
STATION 10006+99.31 TO 10008+19.31

COMPANY NAME: HR GREEN
PROJECT CONTACT: T. SCOTT GREEN, P.E.
CLIENT: VILLAGE OF HINSDALE
DATE PLOTTED: 12/12/2014 11:44:45 AM
FILE NAME: 032.STR.SW.ope-01.dgn
PLOT DRIVER: pdf.pltl
PEN TABLE: standard-trans.tbl

HRGreen — HRGreen.com — Illinois Professional Design Firm # 184-001322

USER NAME = dstanoz	DESIGNED - JMW	REVISED -	
	CHECKED - RGD	REVISED -	
PLOT SCALE =	DRAWN - WJH	REVISED -	
PLOT DATE = 12/12/2014	CHECKED - 12/12/14	REVISED -	

STATE OF ILLINOIS
DEPARTMENT OF TRANSPORTATION

SHEET NO. SW-01 OF SW-05 SHEETS

F.A.U. RTE.	SECTION	COUNTY	TOTAL SHEETS	SHEET NO.
2999	10-00089-00-BR	DUPAGE	157	121
		CONTRACT NO. 61B11		
		ILLINOIS FED. AID PROJECT	BRM-9003(699)	

GENERAL NOTES:

1. Reinforcement bars designated (E) shall be epoxy coated.
2. Over excavation beyond the limits of structure excavation is not measured for payment. Backfill over excavation with same material specified for roadway embankment.
3. "Porous Granular Backfill" and "Removal and Disposal of Unsuitable Material" not included in the Earthwork Schedule have been added for use if Unsuitable Material is encountered in the field as determined by the Engineer. If Unsuitable Material is not encountered, then the quantities shall be deducted and no compensation will be due to the Contractor.

   Additional Quantity:
   Removal and Disposal of Unsuitable Material = 105 CU YD.
   Porous Granular Backfill = 105 CU YD.

TOTAL BILL OF MATERIAL

ITEM	UNIT	TOTAL
REMOVAL AND DISPOSAL OF UNSUITABLE MATERIAL	CU YD	105
POROUS GRANULAR BACKFILL	CU YD	266
STRUCTURE EXCAVATION	CU YD	184
CONCRETE STRUCTURES	CU YD	111
REINFORCEMENT BARS, EPOXY COATED	POUND	16,190
GEOCOMPOSITE WALL DRAIN	SQ YD	121
LIMESTONE MASONRY VENEER	SQ FT	1,138
PARAPET RAILING, SPECIAL	FOOT	100
PIPE UNDERDRAINS FOR STRUCTURES 4"	FOOT	130
ARCHITECTURAL CAP, CONCRETE	EACH	4

INDEX OF SHEETS

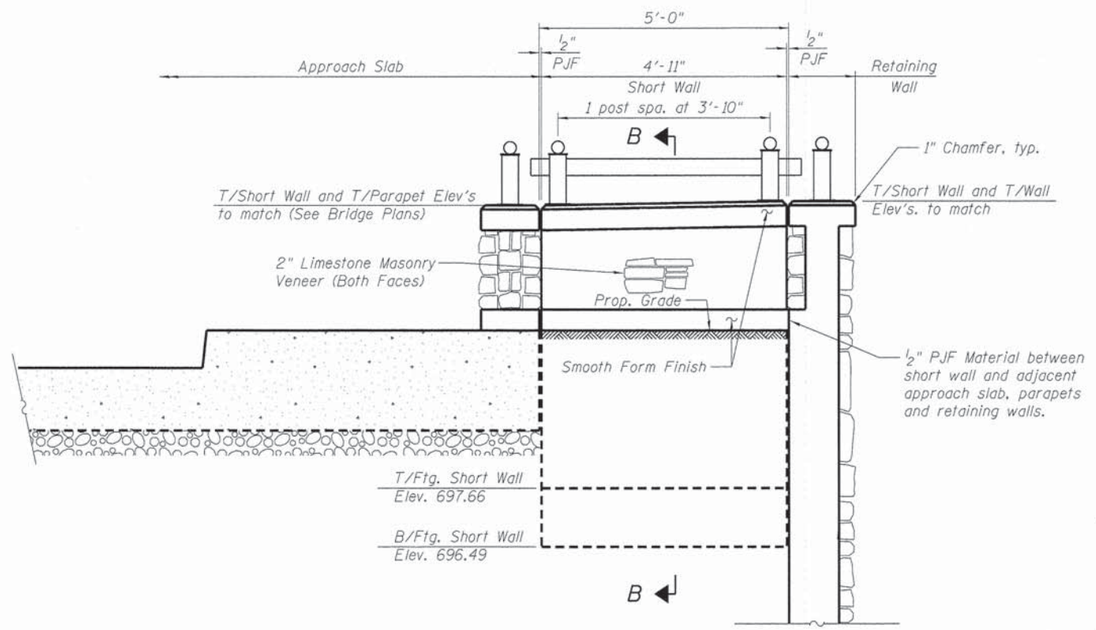

SHORT WALL ELEVATION

Looking North at South Face

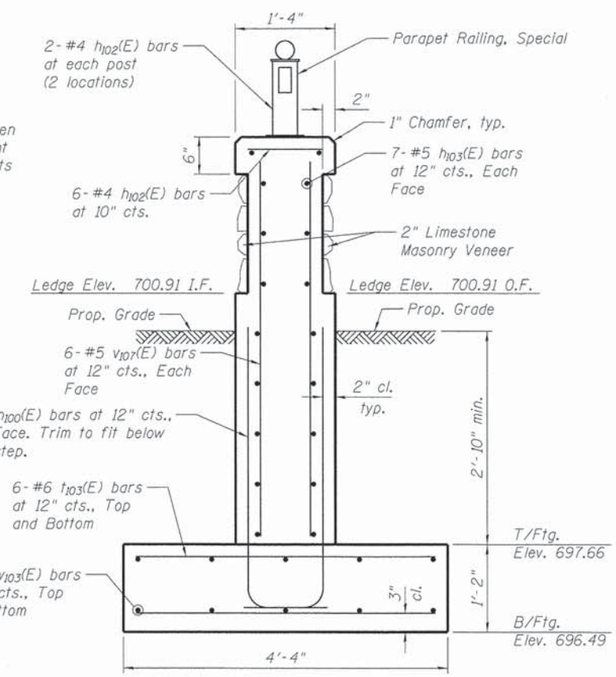

SECTION B-B

See Sheet SW-04 for Bill of Bars

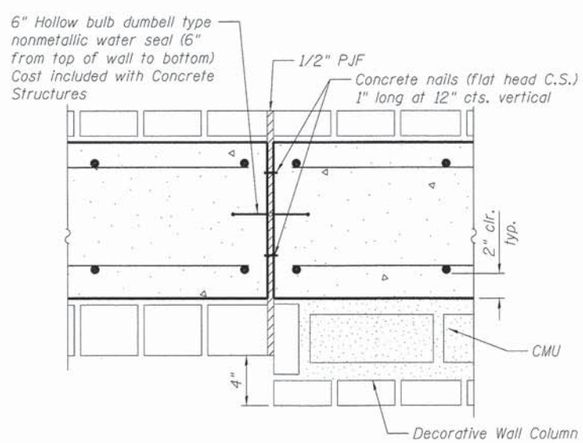

EXPANSION JOINT

Cost included with Concrete Structures

COMPANY NAME: HR GREEN
PROJECT CONTACT: T. SCOTT CREECH, P.E.
CLIENT: VILLAGE OF HINSDALE
DATE PLOTTED: 12/12/2014 11:44:48 AM
FILE NAME: 032_STR_S#_gen.dgn
PLOT DRIVER: pat_pl4
PEN TABLE: standard-trans.tbl

HRGreen.com
Illinois Professional Design Firm # 184-001322

USER NAME = dstancz	DESIGNED - JMW	REVISED -	
	CHECKED - RGD	REVISED -	
PLOT SCALE =	DRAWN - WJH	REVISED -	
PLOT DATE = 12/12/2014	CHECKED - 12/12/14	REVISED -	

STATE OF ILLINOIS
DEPARTMENT OF TRANSPORTATION

GENERAL NOTES AND TOTAL BILL OF MATERIAL

SHEET NO. SW-02 OF SW-05 SHEETS

F.A.U. RTE.	SECTION	COUNTY	TOTAL SHEETS	SHEET NO.
2999	10-00089-00-BR	DUPAGE	157	122

CONTRACT NO. 61B11

ILLINOIS FED. AID PROJECT BRM-9003(699)

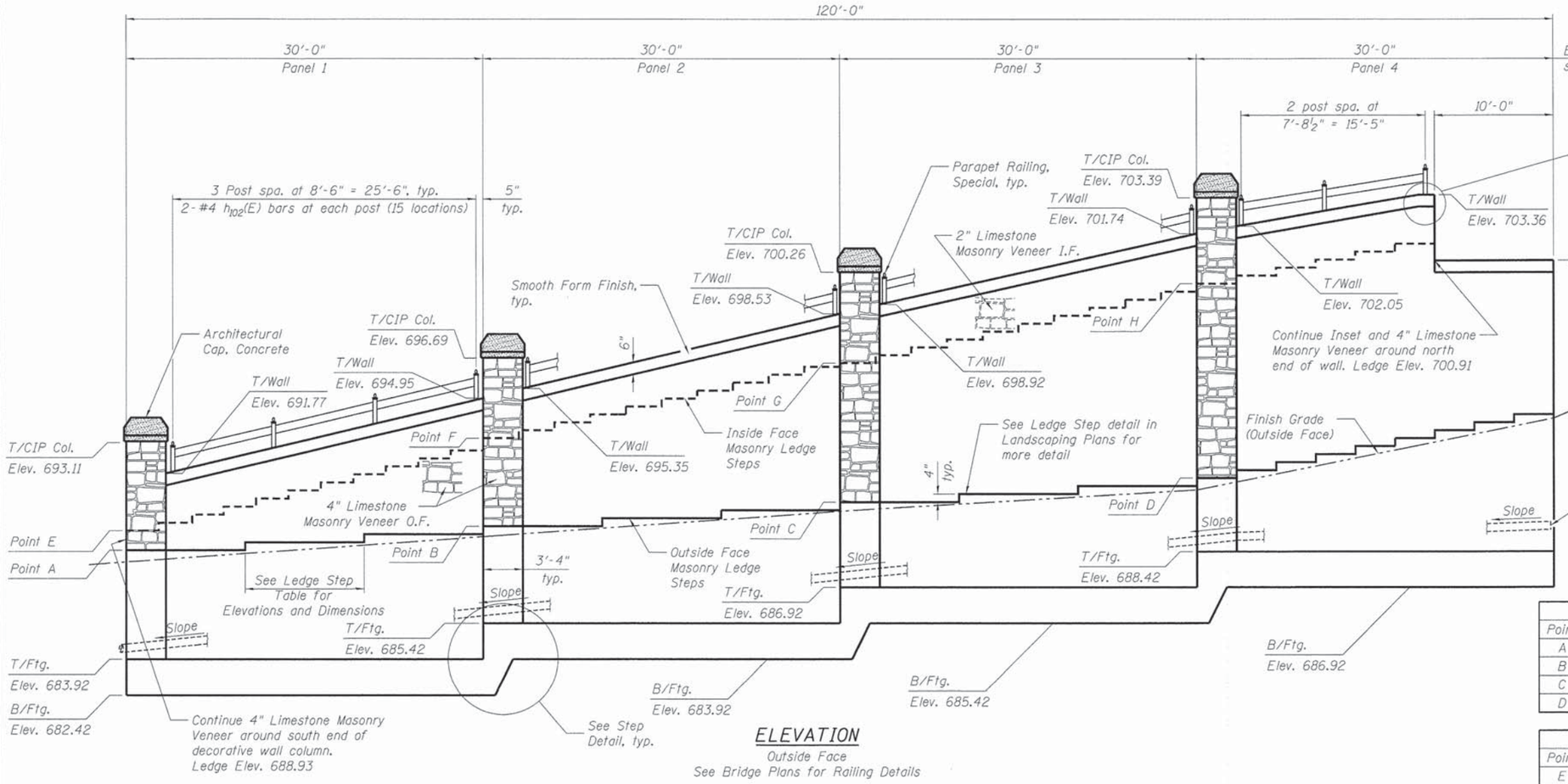

ELEVATION

Outside Face
See Bridge Plans for Railing Details

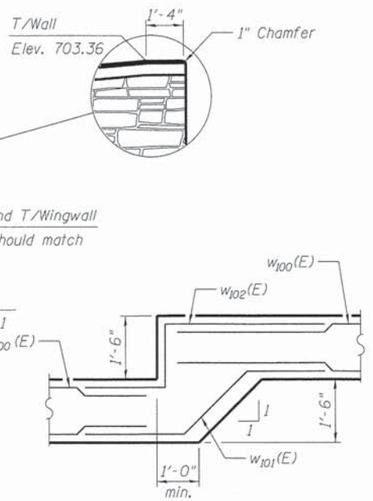

STEP DETAIL

LEDGE STEP TABLE

OUTSIDE FACE OF WALL		
Point	Elev.	Step Spacing
A	688.50	(3) - 4" Steps at 10'-0" Spacing = 30'-0"
B	689.50	(3) - 4" Steps at 10'-0" Spacing = 30'-0"
C	690.50	(3) - 4" Steps at 10'-0" Spacing = 30'-0"
D	691.50	(9) - 4" Steps at 3'-4" Spacing = 30'-0"

INSIDE FACE OF WALL		
Point	Elev.	Step Spacing
E	689.26	(11) - 4" Steps at ± 2'-8 3/4" Spacing = 30'-0"
F	692.76	(11) - 4" Steps at ± 2'-8 3/4" Spacing = 30'-0"
G	696.43	(10) - 4" Steps at 3'-0" Spacing = 30'-0"
H	699.59	(6) - 4" Steps at 3'-4" Spacing = 20'-0"

Step height may vary across Expansion Joints.
Work points control step elevations

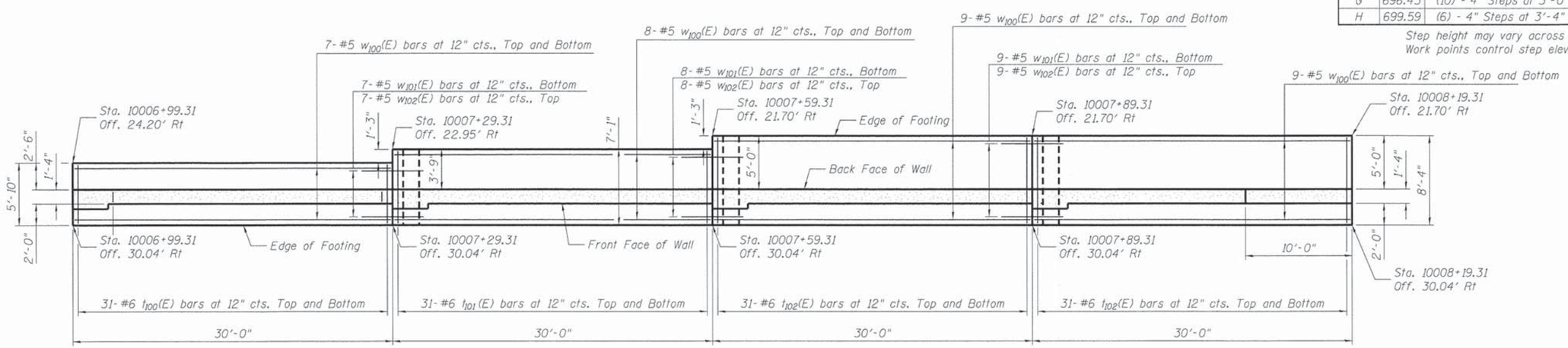

FOOTING PLAN

Short Wall not shown for clarity

COMPANY NAME: HR GREEN
PROJECT CONTACT: T. SCOTT GREECH, P.E.
CLIENT: VILLAGE OF HINSDALE
DATE PLOTTED: 12/12/2014 11:44:50 AM
FILE NAME: 02L3119_SW_tf1001.dgn
PLOT TIME: 0.0 Hrs.
PEN TABLES: standard-trans.tbl

HRGreen.com
Illinois Professional Design Firm # 184-001322

USER NAME = dstancz	DESIGNED - JMW	REVISED -	STATE OF ILLINOIS DEPARTMENT OF TRANSPORTATION
	CHECKED - RGD	REVISED -	
PLOT SCALE =	DRAWN - WJH	REVISED -	
PLOT DATE = 12/12/2014	CHECKED - 12/12/14	REVISED -	

WALL ELEVATION AND FOOTING PLAN

SHEET NO. SW-03 OF SW-05 SHEETS

F.A.U. RTE.	SECTION	COUNTY	TOTAL SHEETS	SHEET NO.
2999	10-00089-00-BR	DUPAGE	157	123

CONTRACT NO. 61B11

ILLINOIS FED. AID PROJECT BRM-9003(699)

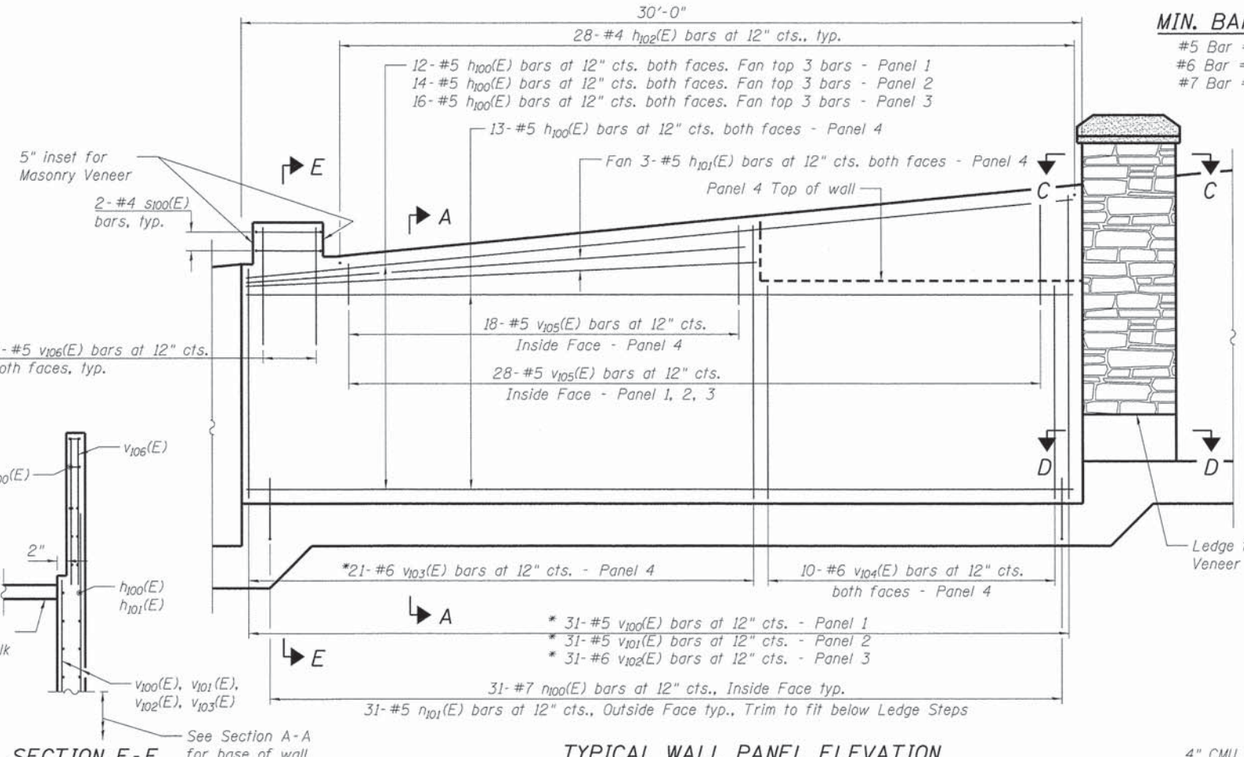

TYPICAL WALL PANEL ELEVATION

Masonry Veneer and Ledge Steps not shown for clarity

SECTION E-E

Masonry Cap not shown for clarity

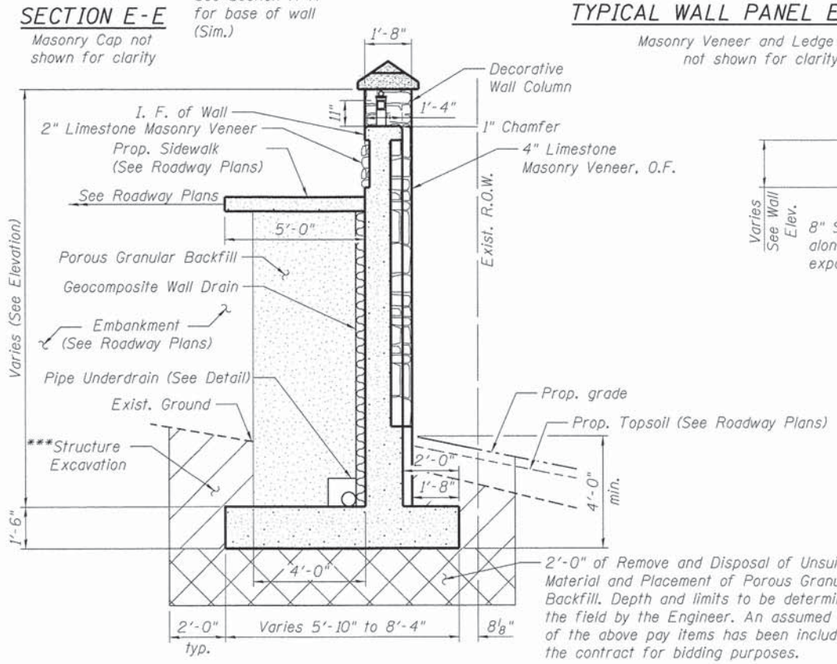

TYPICAL WALL SECTION

*** Backfill remainder of Structure Excavation with same material specified for Roadway Embankment

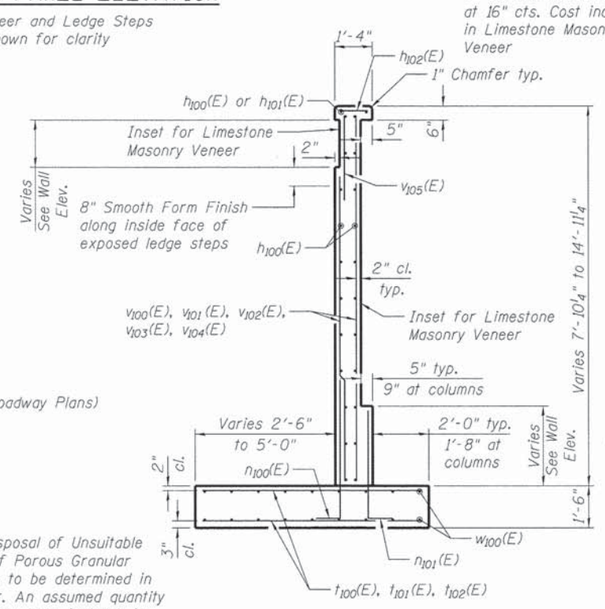

SECTION A-A

MIN. BAR LAP

#5 Bar = 3'-3"
#6 Bar = 3'-10"
#7 Bar = 4'-2"

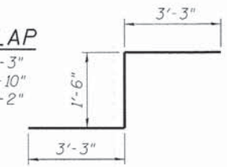

w102(E) BAR

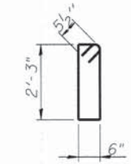

BARS s100(E)

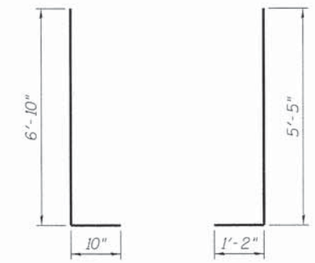

n101(E) BAR n100(E) BAR

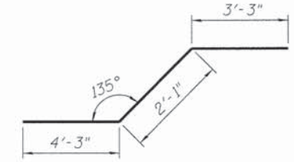

w101(E) BAR

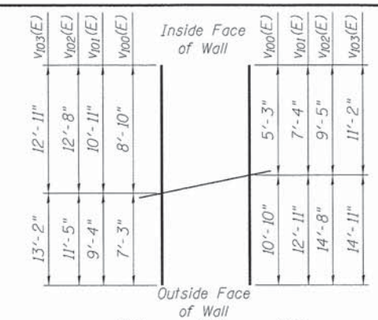

v100(E), v101(E), v102(E), v103(E) BARS

* Order bars full length Cut to fit and use remainder in opposite face in same wall panel. Trim to fit below Ledge Steps at inside face.

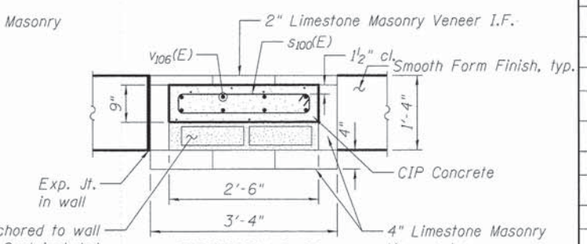

SECTION C-C

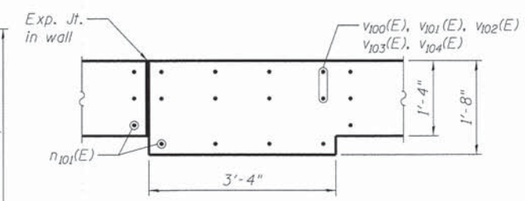

SECTION D-D

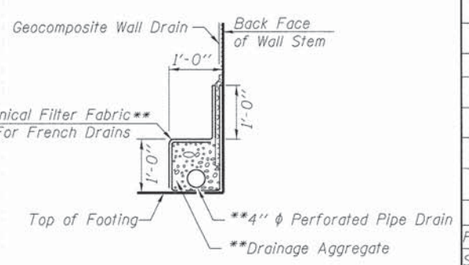

PIPE UNDERDRAIN DETAIL

** Included in the cost of "Pipe Underdrains for Structures"

BILL OF MATERIALS

Bar	No.	Size	Length	Shape
h100(E)	110	#5	29'- 8"	
h101(E)	6	#5	19'- 8"	
h102(E)	152	#4	1'- 0"	
h103(E)	14	#5	4'- 8"	
n100 (E)	136	#7	6'- 7"	
n101 (E)	124	#5	7'- 8"	
s100 (E)	8	#4	6'- 5"	
t100(E)	62	#6	5'- 6"	
t101(E)	62	#6	6'- 9"	
t102(E)	124	#6	8'- 0"	
t103(E)	12	#6	4'- 0"	
v100(E)	31	#5	16'- 1"	
v101(E)	31	#5	20'- 3"	
v102(E)	31	#6	24'- 1"	
v103(E)	21	#6	26'- 1"	
v104(E)	20	#6	12'- 0"	
v105(E)	102	#5	5'- 9"	
v106(E)	32	#5	7'- 2"	
v107(E)	12	#5	5'- 6"	
w100 (E)	66	#5	29'- 8"	
w101 (E)	24	#5	9'- 7"	
w102 (E)	24	#5	8'- 0"	
w103 (E)	10	#5	4'- 8"	
Porous Granular Backfill			Cu. Yd.	266
Structure Excavation			Cu. Yd.	184
Concrete Structures			Cu. Yd.	111
Reinforcement Bars, Epoxy Coated			Pound	16,190
Geocomposite Wall Drain			Sq. Yd.	121
Pipe Underdrains for Structures 4"			Foot	130

COMPANY NAME: HR GREEN
PROJECT CONTACT: T. SCOTT GREECH, P.E.
CLIENT: VILLAGE OF HINSDALE
DATE PLOTTED: 12/12/2014 11:44:52 AM
FILE NAME: 032_STR_SW_tnd02.dgn
PLOT DRAWER: pdf.pltr
PEN TABLE: standard-trans.tbl

HRGreen
HRGreen.com
Illinois Professional Design Firm #184-001322

USER NAME = dstanoz	DESIGNED - JMW	REVISED -	
	CHECKED - RGD	REVISED -	
PLOT SCALE =	DRAWN - WJH	REVISED -	
PLOT DATE = 12/12/2014	CHECKED - 12/12/14	REVISED -	

STATE OF ILLINOIS
DEPARTMENT OF TRANSPORTATION

RETAINING WALL SECTIONS AND DETAILS

SHEET NO. SW-04 OF SW-05 SHEETS

F.A.U. RTE.	SECTION	COUNTY	TOTAL SHEETS	SHEET NO.
2999	10-00089-00-BR	DUPAGE	157	124

CONTRACT NO. 61B11

ILLINOIS FED. AID PROJECT BRM-9003(699)

Wang Engineering
wangeng@wangeng.com
1145 N Main Street
Lombard, IL 60148
Telephone: 630 953-9928
Fax: 630 953-9938

BORING LOG RWB-01

WEI Job No.: 373-19-01

Client: Clark Dietz, Inc.
Project: Oak Street Bridge Replacement
Location: Hinsdale, DuPage Co., IL

Datum: NAV88
Elevation: 687.15 ft
North: 1871594.70 ft
East: 1096961.87 ft
Station: 10007+52.3
Offset: 22.4 RT

Profile	Elevation (ft)	SOIL AND ROCK DESCRIPTION	Depth (ft)	Sample Type / recovery	Sample No.	SPT Values (blw/6 in)	Qu (tsf)	Moisture Content (%)
	686.75	5-inch thick, black CLAY LOAM --TOPSOIL--						
		Medium stiff to very stiff, brown CLAY LOAM --FILL--			1	2 3 5	0.50 P	28
			5		2	2 4 5	3.53 B	22
	681.6	Very stiff, brown SILTY CLAY LOAM, trace gravel			3	6 8 8	3.53 B	18
			10		4	3 3 7	2.71 B	19
					5	6 10 11	3.53 B	16
			15		6	5 10 10	2.54 B	14
	671.6	--HARD DRILLING--						
		Medium dense, gray SILTY LOAM, trace gravel			7	10 10 11	NP	10
	669.1	Stiff, gray SILTY LOAM, trace to little gravel						
			20		8	3 5 8	1.48 B	12
		--L_L = 20%, P_I = 14% --% Gravel = 14.4%-- --% Sand = 23.5%-- --% Silt = 47.2%-- --% Clay = 14.9%--			9	5 6 8	1.48 B	11
			25		10	3 5 6	1.56 B	12
					11	9 10 14	1.25 P	12
			30		12	5 5 7	0.74 B	14
			35		13	5 12 10	1.23 B	12
	652.1	Boring terminated at 35.00 ft						
			40					

GENERAL NOTES

Begin Drilling: 03-02-2012 Complete Drilling: 03-02-2012
Drilling Contractor: Wang Testing Services Drill Rig: D-50 ATV
Driller: K&K Logger: F. Bozga Checked by: M. Snider
Drilling Method: 3.25 IDA HSA; Boring backfilled upon completion

WATER LEVEL DATA

While Drilling: DRY
At Completion of Drilling: DRY
Time After Drilling: NA
Depth to Water: NA

*The stratification lines represent the approximate boundary between soil types; the actual transition may be gradual.

WANGENGINC 373190 GPJ WANGENG.GDT 4/3/12

COMPANY NAME: HR GREEN
PROJECT CONTACT: T. SCOTT CREECH, P.E.
CLIENT: VILLAGE OF HINDSDALE
DATE PLOTTED: 12/12/2014 11:46:54 AM
FILE NAME: 032.STR.SW.SB01.dgn
PLOT DRIVER: pdf.pltr
PEN TABLE: standard-trans.tbl

HRGreen.com Illinois Professional Design Firm # 184-001322	USER NAME = dstencz	DESIGNED - JMW	REVISED -	STATE OF ILLINOIS DEPARTMENT OF TRANSPORTATION	SOIL BORING LOGS	F.A.U. RTE.	SECTION	COUNTY	TOTAL SHEETS	SHEET NO.
		CHECKED - RGD	REVISED -			2999	10-00089-00-BR	DUPAGE	157	125
	PLOT SCALE =	DRAWN - WJH	REVISED -					CONTRACT NO. 61B11		
	PLOT DATE = 12/12/2014	CHECKED - 12/12/14	REVISED -		SHEET NO. SW-05 OF SW-05 SHEETS		ILLINOIS	FED. AID PROJECT	BRM-9003(699)	

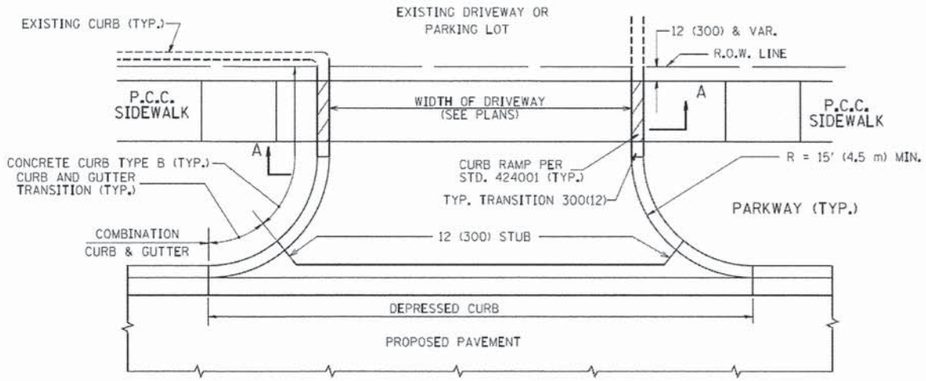

WITH CONCRETE CURB, TYPE B

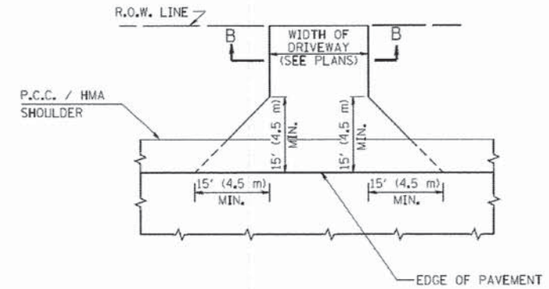

ADJACENT TO P.C.C. / HMA SHOULDER

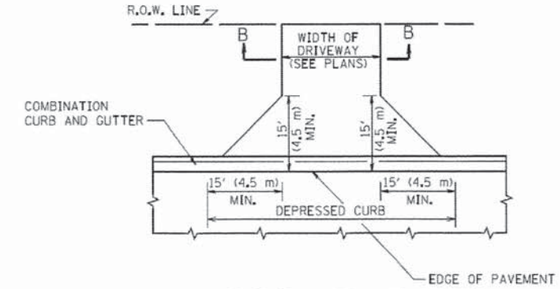

ADJACENT TO CURB AND GUTTER

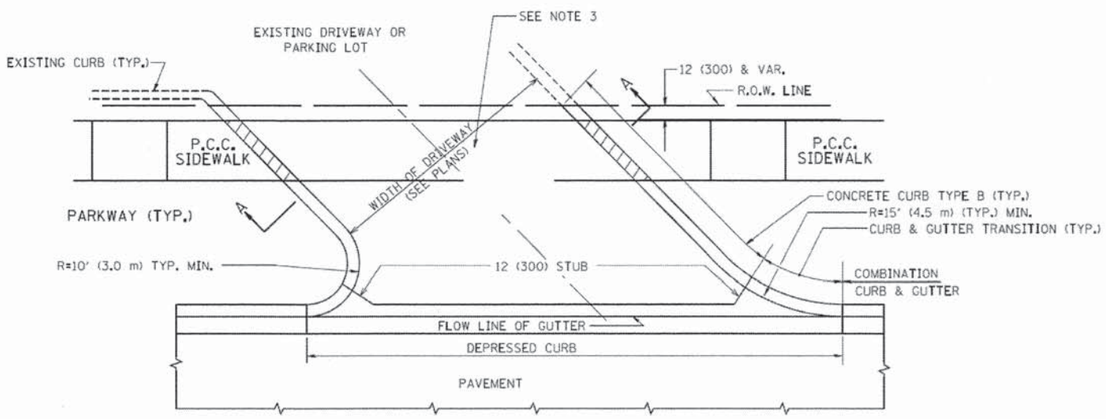

WITH CONCRETE CURB, TYPE B

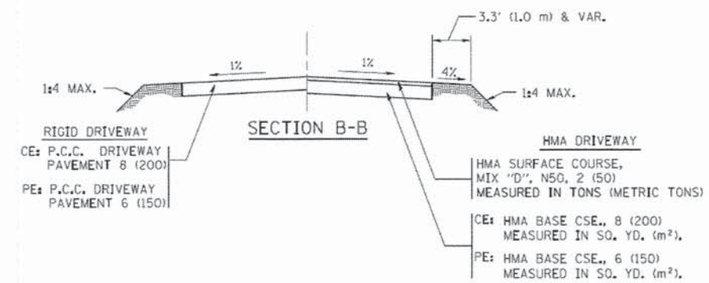

SECTION B-B

RURAL FIELD ENTRANCE (FE)

HMA SURFACE COURSE, MIX "D", N50, 2 (50) MEASURED IN TONS (METRIC TONS)

AGGREGATE BASE CSE., TYPE B, 8 (200) MEASURED IN SQ. YD. (m²).

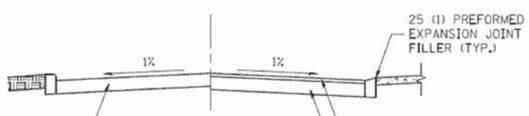

SECTION A-A

RIGID DRIVEWAY

COMMERCIAL ENTRANCE (CE): P.C.C. DRIVEWAY PAVEMENT 8 (200) MEASURED IN SQ. YD. (m²)

NON-COMMERCIAL ENTRANCE (PE): P.C.C. DRIVEWAY PAVEMENT 6 (150 MEASURED IN SQ. YD. (m²)

HMA DRIVEWAY

HMA SURFACE COURSE, MIX "D", N50, 2 (50) MEASURED IN TONS (METRIC TONS)

CE: HMA BASE COURSE, 8 (200) MEASURED IN SQ. YD. (m²).

PE: HMA BASE COURSE, 6 (150) MEASURED IN SQ. YD. (m²).

GENERAL NOTES:

DRIVEWAY SLOPES, LOCATIONS, & GEOMETRIC LAYOUT SHALL BE IN ACCORDANCE WITH THE LATEST EDITION OF THE "HANDBOOK FOR POLICY ON PERMITS FOR ACCESS DRIVEWAYS TO STATE HIGHWAYS". FOR FURTHER LAYOUT REQUIREMENTS, REFER TO ILLUSTRATIONS IN THE PERMIT HANDBOOK. DRIVEWAYS SHALL BE REPLACED IN KIND, UNLESS OTHERWISE NOTED ON THE PLANS.

COMMERCIAL DRIVEWAYS SHALL BE CONSTRUCTED WITH CONCRETE CURB, TYPE B RETURNS EXCEPT WHEN THE SIDEWALK EDGE IS 4 FEET (1.2 METERS) OR LESS FROM THE BACK OF CURB, CONSTRUCT A FLARE DRIVEWAY WITHOUT CURB.

THE RESIDENT ENGINEER SHALL CONTACT THE TRAFFIC PERMIT OFFICE AT 847/ 705-4131 FOR ANY QUESTIONS ON DRIVEWAYS SHOWN IN THE PLANS; SPECIFICALLY IN REFERENCE TO ADDITIONAL AND/OR RELOCATION/REMOVAL OF A DRIVEWAY.

COMBINATION CONCRETE CURB & GUTTER SHALL BE MEASURED STRAIGHT ACROSS THE DRIVEWAY. NO ADDITIONAL COMPENSATION WILL BE ALLOWED FOR THE CURB & GUTTER TRANSITION.

1 (25) PREFORMED EXPANSION JOINT FILLER WILL NOT BE PAID SEPARATELY, BUT SHALL BE CONSIDERED INCLUDED IN THE COST OF THE P.C.C. DRIVEWAY PAVEMENT OR P.C.C. SIDEWALK.

WHEN THE P.C.C. SIDEWALK EXTENDS THROUGH THE DRIVEWAY, THE THICKNESS OF THE SIDEWALK IN THE DRIVEWAY AREA SHALL BE THE SAME AS THE DRIVEWAY THICKNESS. SIDEWALK WILL BE PAID FOR AS P.C.C. SIDEWALK OF THE THICKNESS SPECIFIED. SIDEWALK CROSS SLOPE THRU DRIVEWAY AREA TO BE A MAXIMUM OF 1:50.

COMPANY NAME: HR GREEN
PROJECT CONTACT: T. SCOTT GREEN, P.E.
CLIENT: VILLAGE OF HINSDALE
DATE PLOTTED: 12/11/2014 10:53:31 PM
FILE NAME: D:\PW_work\dupage\d0156_bd01\bd01_pdf.pwpt
PLOT DRIVER: standard-trans-screen-topo.tbl
PEN TABLE:

FILE NAME = ca\pw_work\pwidot\leyso\d0180315\bd01.dgn	USER NAME = leyso	DESIGNED - R. SHAH	REVISED - P. LaFLUER 04-15-03	STATE OF ILLINOIS DEPARTMENT OF TRANSPORTATION	DRIVEWAY DETAILS – DISTANCE BETWEEN R.O.W. AND FACE OF CURB & EDGE OF SHOULDER >= 15' (4.5 m)
		DRAWN -	REVISED - R. BORO 01-01-07		
	PLOT SCALE = 50.0000 ' / in.	CHECKED -	REVISED - R. BORO 06-11-08		
	PLOT DATE = 9/6/2011	DATE - 11-04-95	REVISED - R. BORO 09-06-11		SCALE: NONE · SHEET NO. 1 OF 1 SHEETS · STA. · TO STA.

F.A. RTE.	SECTION	COUNTY	TOTAL SHEETS	SHEET NO.
2999	10-00089-00-BR	DUPAGE	157	126
	BD0156-07 (BD-01)	CONTRACT NO.	61B11	
FED. ROAD DIST. NO. 1	ILLINOIS	FED. AID PROJECT		

032_ce101-bd01.dgn

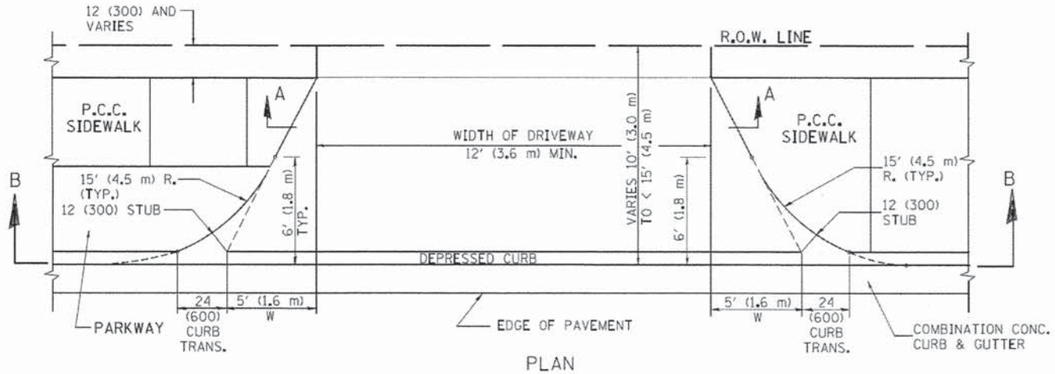

PLAN

10' (3.0 m) TO < 15' (4.5 m)

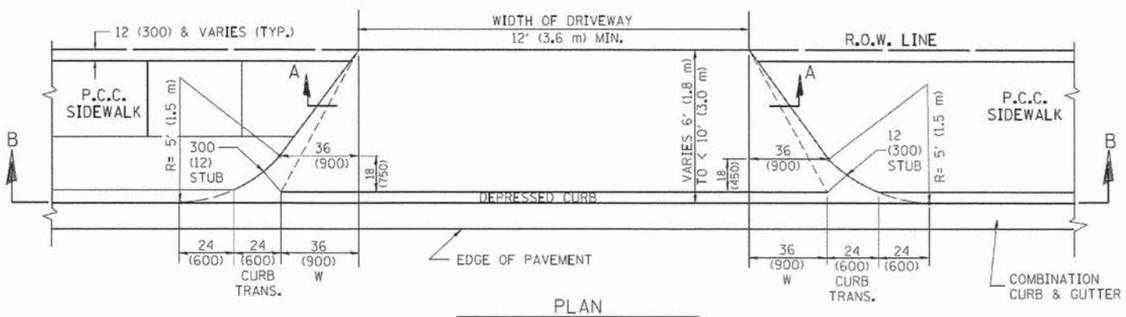

PLAN

6' (1.8 m) TO < 10' (3.0 m)

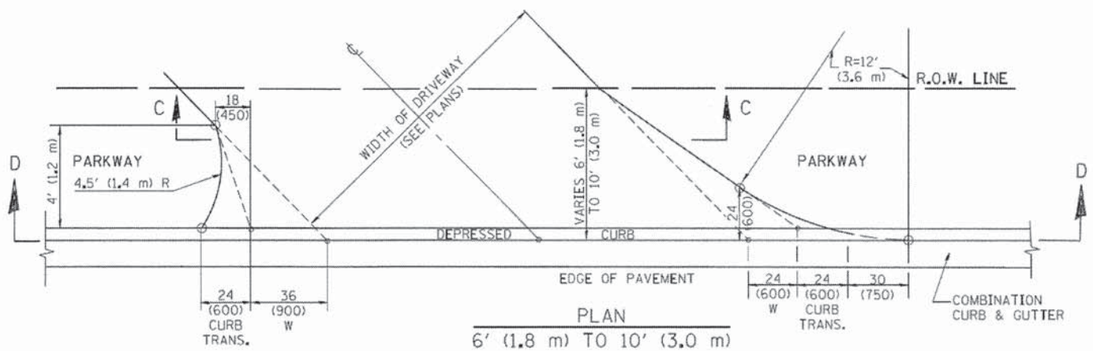

PLAN

6' (1.8 m) TO 10' (3.0 m)

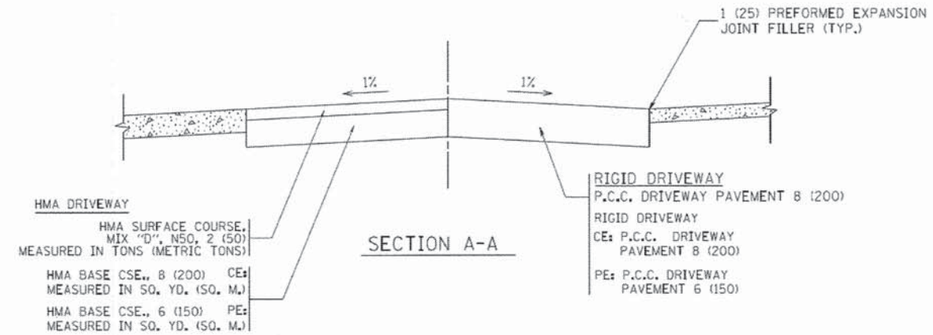

SECTION A-A

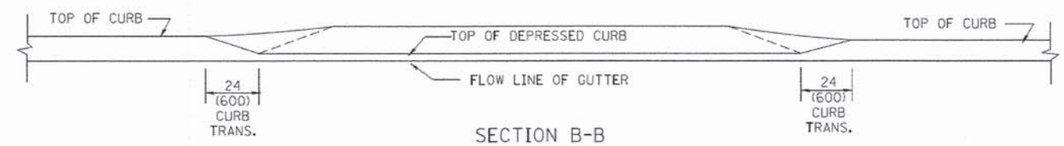

SECTION B-B

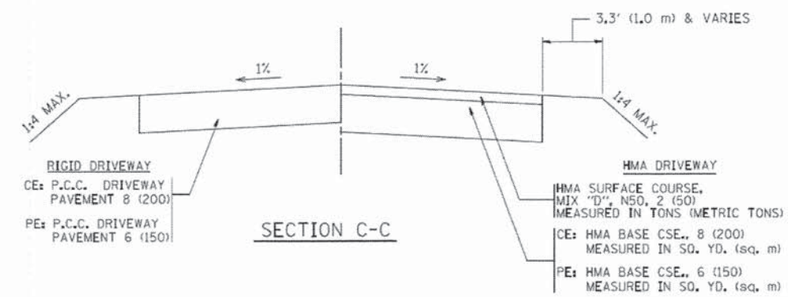

SECTION C-C

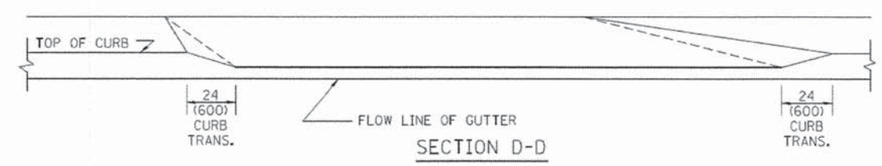

SECTION D-D

GENERAL NOTES

DRIVEWAY SLOPES, LOCATIONS, & GEOMETRIC LAYOUT SHALL BE IN ACCORDANCE WITH THE LATEST EDITION OF THE "HANDBOOK FOR POLICY ON PERMITS FOR ACCESS DRIVEWAYS TO STATE HIGHWAYS". FOR FURTHER LAYOUT REQUIREMENTS, REFER TO ILLUSTRATION 10 IN THE PERMIT HANDBOOK. WHERE SIDEWALKS EXIST, DRIVEWAYS SHALL BE REPLACED WITH RIGID PAVEMENT. WHERE NO SIDEWALKS EXIST, DRIVEWAYS SHALL BE REPLACED IN KIND. SIDEWALK CROSS SLOPE THRU DRIVEWAY AREA TO BE A MAXIMUM OF 1:50.

WHEN THE DISTANCE BETWEEN R.O.W. AND THE BACK OF CURB IS EQUAL TO OR LESS THAN 8' (2.4 m), THE P.C.C. SIDEWALK SHALL EXTEND TO THE BACK OF CURB.

THE RESIDENT ENGINEER SHALL CONTACT THE TRAFFIC PERMIT OFFICE AT 847/ 705-4131 FOR ANY QUESTIONS ON DRIVEWAYS SHOWN IN THE PLANS; SPECIFICALLY IN REFERENCE TO ADDITIONAL AND/OR RELOCATION/REMOVAL OF A DRIVEWAY.

COMBINATION CONCRETE CURB & GUTTER SHALL BE MEASURED STRAIGHT ACROSS THE DRIVEWAY. NO ADDITIONAL COMPENSATION WILL BE ALLOWED FOR THE CURB & GUTTER TRANSITION.

THE 1 (25) PREFORMED EXPANSION JOINT FILLER WILL NOT BE PAID SEPARATELY, BUT SHALL BE CONSIDERED INCLUDED IN THE COST OF THE P.C.C. DRIVEWAY PAVEMENT OR P.C.C. SIDEWALK.

"W" VARIES FROM 36 (900) TO 5' (1.5 m) PROPORTIONAL TO THE LENGTH (L), FROM 6' (1.8 m) TO 10' (3 m).

ALL DIMENSIONS ARE IN INCHES (MILLIMETERS) UNLESS OTHERWISE NOTED.

COMPANY NAME: HR GREEN
PROJECT CONTACT: T. SCOTT GREEN, P.E.
CLIENT: VILLAGE OF WOODDALE
DATE PLOTTED: 12/14/2011 2:00:02 PM
FILE NAME: 032_de102-bd02.dgn
PLOT DRIVER: pdf.pltcfg
PEN TABLE: standard-trans-screen-topo.tbl

FILE NAME = c:\pw_work\pwidot\layso\d0108315\bd02.dgn	USER NAME = layso	DESIGNED - R. SHAH	REVISED - M. GOMEZ 04-06-01	STATE OF ILLINOIS DEPARTMENT OF TRANSPORTATION	DRIVEWAY DETAILS DISTANCE BETWEEN ROW AND FACE OF CURB < 15' (4.5 m)
		DRAWN -	REVISED - P. LoFLEUR 04-15-03		
	PLOT SCALE = 50.0000 ' / in.	CHECKED -	REVISED - R. BORO 01-01-07		
	PLOT DATE = 10/28/2011	DATE - 11-06-95	REVISED - R. BORO 09-06-11		SCALE: NONE · SHEET NO. 1 OF 1 SHEETS · STA. · TO STA.

F.A. RTE.	SECTION	COUNTY	TOTAL SHEETS	SHEET NO.
2999	10-00089-00-BR	DUPAGE	157	127
	BD400-02 (BD-02)	CONTRACT NO.	61B11	
FED. ROAD DIST. NO. 1	ILLINOIS	FED. AID PROJECT		

032_de102-bd02.dgn

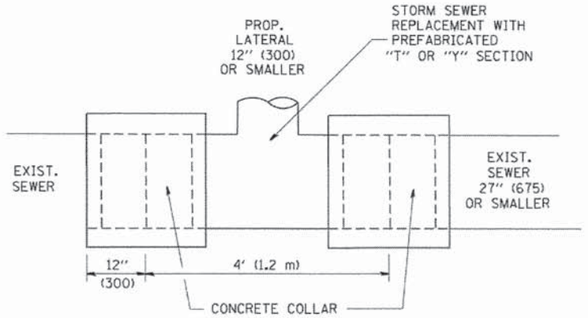

DETAIL "A"

LATERAL CONNECTION TO EXISTING SEWER
OF 27" (675) OR SMALLER

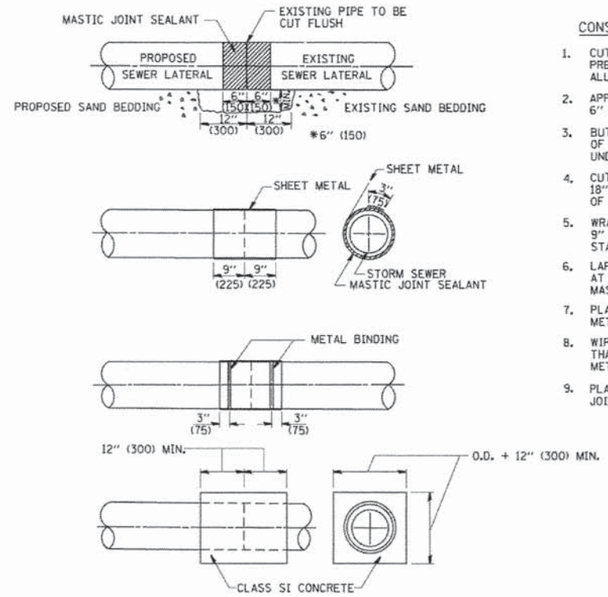

DETAIL "B"

CLASS SI CONCRETE COLLAR

CONSTRUCTION SEQUENCE

1. CUT THE EXISTING END OF THE PIPE SO AS TO PRESENT A FLUSH BUTT JOINT. BRUSH AND CLEAN ALL PIPES.
2. APPLY THE MASTIC JOINT SEALANT TO THE FIRST 6" (150) OF EACH PIPE.
3. BUTT THE PIPES TOGETHER LEAVING A MINIMUM OF 12" x 6" (300 x 150) DEEP EXCAVATION UNDER AND AROUND EACH PIPE END.
4. CUT A PIECE OF SHEET METAL GAGE NO. 19 1.1 (0.0418) 18" (450) WIDE BY THE OUTSIDE CIRCUMFERANCE OF THE PIPE PLUS 3" (75) LONG.
5. WRAP THE SHEET METAL AROUND THE PIPES, 9" (225) ON EACH SIDE OF THE JOINT, STARTING AT THE TOP OF THE PIPE.
6. LAP THE SHEET METAL AT LEAST 3" (75) AT THE TOP OF THE PIPE AND PLACE THE MASTIC JOINT SEALANT BETWEEN THE LAP.
7. PLACE TWO METAL BANDS AROUND THE SHEET METAL AND TIGHTEN.
8. WIPE OFF ANY EXCESS MASTIC JOINT SEALANT THAT OOZES OUT FROM BETWEEN THE SHEET METAL AND THE PIPES.
9. PLACE CLASS SI CONCRETE AROUND THE JOINT.

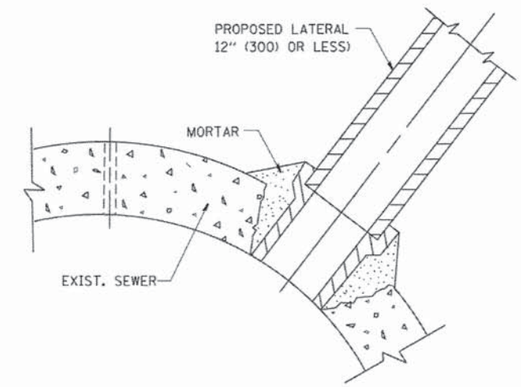

DETAIL "C"

PROPOSED LATERAL
CONNECTION TO EXISTING SEWER
OF 30" (750) OR LARGER

NOTES

MATERIAL

MATERIAL USED FOR THE TEE OR WYE SECTION SHALL BE COMPATIBLE WITH THE EXISTING STORM SEWER OR THE PROPOSED STORM SEWER.

CONSTRUCTION METHODS

I. THIS WORK SHALL BE CONSTRUCTED IN CONFORMANCE WITH THE APPLICABLE PORTIONS OF SECTION 550 OF THE STANDARD SPECIFICATIONS.

II. CONNECTION TO AN EXISTING STORM SEWER SHALL BE BY EITHER OF THE FOLLOWING METHODS:

A) PROPOSED STORM SEWER CONNECTION TO EXISTING SEWER OF 27" (675) OR SMALLER SEE DETAIL "A" AND "B".

B) PROPOSED STORM SEWER CONNECTION TO EXISTING SEWER OF 30" (750) OR LARGER SEE DETAIL "C".

IF THE EXISTING SEWER PIPE IS CRACKED, BROKEN OR OTHERWISE DAMAGED BY THE CONTRACTOR IN MAKING THE CIRCULAR OPENING, THE CONTRACTOR SHALL REPLACE THAT SECTION OF PIPE WITH PIPE EQUAL AND SIMILAR IN ALL RESPECTS TO THE PIPE IN THE EXISTING SEWER, IN A CAREFUL WORKMANLIKE MANNER, WITHOUT EXTRA COMPENSATION.

GENERAL

CARE MUST BE TAKEN TO PREVENT DEBRIS FROM ENTERING THE SEWER. ALL DEBRIS WHICH ENTERS THE SEWER MUST BE REMOVED. THE SEWER MUST BE LEFT CLEAN AND UNOBSTRUCTED UPON COMPLETION OF THE CONTRACT.

CARE MUST BE TAKEN TO PREVENT ANY PART OF THE NEW PIPE CONNECTION FROM PROJECTING INTO THE EXISTING SEWER.

BASIS OF PAYMENT

TEE OR WYE CONNECTIONS SHALL BE PAID FOR AT THE CONTRACT UNIT PRICE EACH FOR STORM SEWER TEE OR WYE OF THE TYPE AND SIZE SPECIFIED IN THE PLANS. THIS PRICE SHALL INCLUDE ALL EXCAVATION OF THE TRENCH, REMOVAL OF THE EXISTING STORM SEWER, FURNISHING AND INSTALLING THE SPECIFIED TEE OR WYE SECTION, FURNISHING AND INSTALLING THE REQUIRED CONCRETE COLLAR, AND ALL OTHER MATERIAL NECESSARY TO COMPLETE THIS WORK AS SHOWN AND SPECIFIED.

REMOVAL AND REINSTALLATION OF EXISTING STORM SEWER ADJACENT TO THE PROPOSED TEE OR WYE SECTION, FOR THE PURPOSE OF FACILITATING THE INSTALLATION OF THE TEE OR WYE SECTION, WILL NOT BE PAID FOR SEPARATELY BUT SHALL BE INCLUDED IN THE UNIT PRICE BID FOR THE WORK.

TRENCH BACKFILL, EXCAVATION IN ROCK AND REMOVAL AND REPLACEMENT OF UNSUITABLE MATERIAL BELOW PLAN BEDDING GRADE WILL BE PAID FOR SEPARATELY.

CONCRETE COLLAR FOR CONNECTING A PROPOSED STORM SEWER TO AN EXISTING STORM SEWER WILL NOT BE PAID PAID FOR SEPARATELY BUT SHALL BE INCLUDED IN THE COST OF THE PROPOSED STORM SEWER.

ALL DIMENSIONS ARE IN INCHES (MILLIMETERS) UNLESS OTHERWISE SHOWN.

COMPANY NAME: HR GREEN
PROJECT CONTACT: T. SCOTT CREEDON, P.E.
CLIENT: VILLAGE OF HINSDALE
DATE PLOTTED: 12/12/2012 3:05:24 PM
FILE NAME: 032_ce103-bd07.dgn
PLOT DRIVER: pdf_ymdt
PEN TABLE: standard-trans-screen-topo.tbl

032_ce103-bd07.dgn

FILE NAME = W:\diststd\22x34\bd07.dgn	USER NAME = gaglierobt	DESIGNED - M. DE YONG	REVISED - M. DE YONG 05-08-92	STATE OF ILLINOIS DEPARTMENT OF TRANSPORTATION	DETAIL OF STORM SEWER CONNECTION TO EXISTING SEWER	F.A. RTE.	SECTION	COUNTY	TOTAL SHEETS	SHEET NO.
		DRAWN -	REVISED - R. SHAH 09-09-94			2999	10-00089-00-BR	DUPAGE	157	128
	PLOT SCALE = 50.000 ' / IN.	CHECKED -	REVISED - R. SHAH 10-25-94			BD500-01 (BD-7)		CONTRACT NO.		61B11
	PLOT DATE = 1/4/2008	DATE - 07-25-90	REVISED - R. SHAH 06-12-96		SCALE: NONE / SHEET NO. 1 OF 1 SHEETS / STA. / TO STA.	FED. ROAD DIST. NO. 1	ILLINOIS	FED. AID PROJECT		

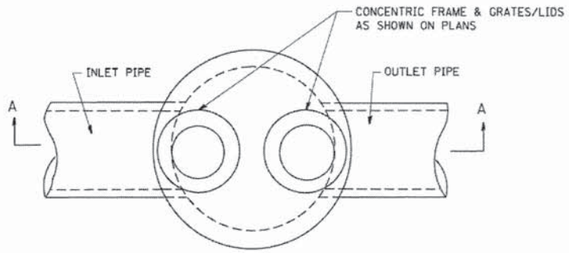

PLAN

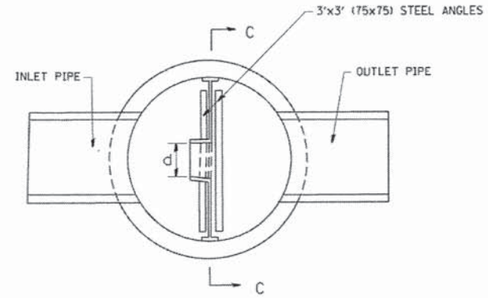

SECTION B-B

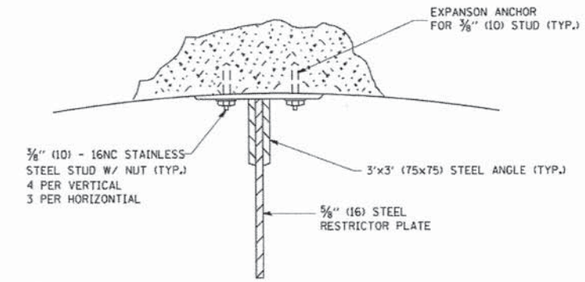

ANGLE FASTENER DETAIL

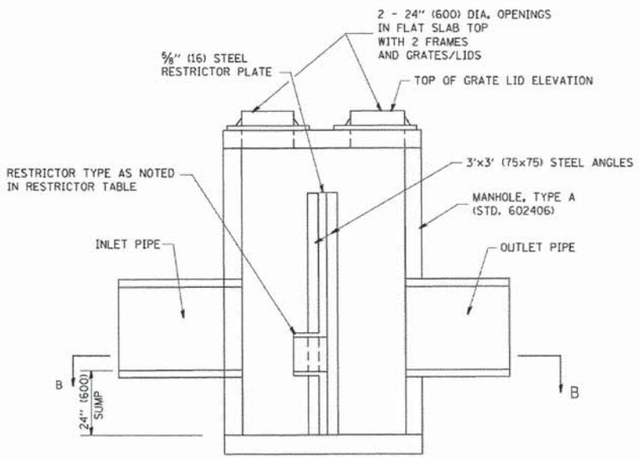

SECTION A-A

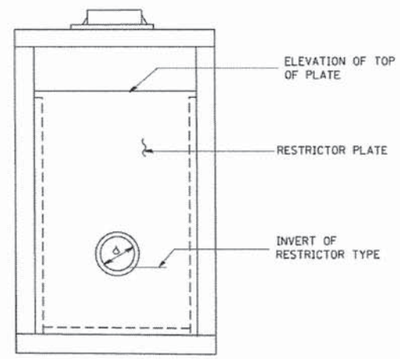

SECTION C-C

NOTES:

1. ALL STEEL ANGLES AND PLATES TO BE GALVANIZED AFTER FABRICATION.
2. ALL RESTRICTOR PLATES, ANGLES AND HARDWARE TO BE INCLUDED IN THE COST OF THE MANHOLE.
3. BASIS OF PAYMENT: "MANHOLES ,TYPE A, 6 FT. (1.8 m)-DIAMETER, TYPE 1 FRAME, CLOSED LID, RESTRICTOR PLATE" EACH

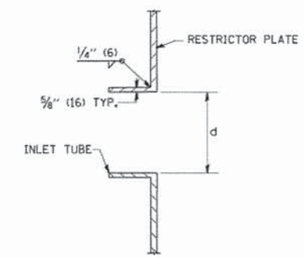

INLET TUBE DETAIL

STATION	MANHOLE DIAMETER	FRAME AND GRATE	RESTRICTOR TYPE	INSIDE RESTRICTOR TYPE DIAMETER in. (mm) (d)	INVERT OF RESTRICTOR TYPE	ELEVATION OF TOP OF PLATE OVERFLOW
2007+20.0	8.0'	T1F CL	3	12	670.40	676.20
2008+10.0	6.0'	T1F CL	3	12	670.26	N/A

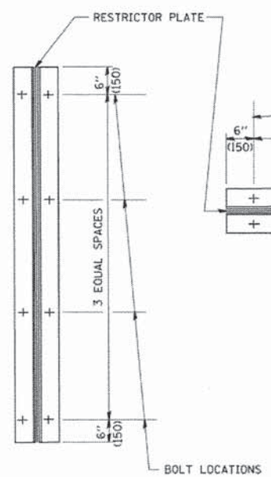

TYPICAL VERTICAL ANGLES
LOOKING TOWARD MANHOLE WALL

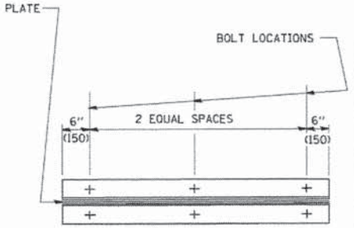

TYPICAL HORIZONTIAL
ANGLES LOOKING TOWARD
BOTTOM OF MANHOLE

TOTAL BOLTS REQUIRED: 22

NOTE:

1. ANGLES SHOULD BE 3x3x3/8 (75x75x75)
2. VERTICAL ANGLES SHOULD EXTEND FROM THE BOTTOM OF THE RESTRICTOR PLATE TO THE TOP.
3. HORIZONTIAL ANGLES SHOULD EXTEND FROM VERTICAL ANGLE TO VERTICAL ANGLE.

STEEL ANGLE BOLTING DETAILS

RESTRICTOR TYPE					
1	2	3	4	5	6
RE-ENTRANT TUBE	SHARP EDGED	SQUARE EDGED	RE-ENTRANT TUBE	SQUARE EDGED	ROUNDED
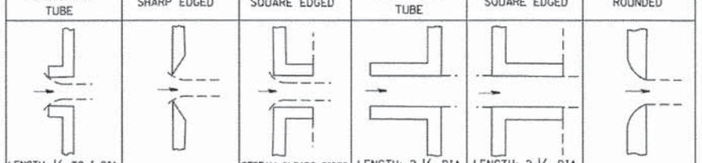					
LENGTH: 1/2 TO 1 DIA.		STREAM CLEARS SIDES	LENGTH: 2-1/2 DIA.	LENGTH: 2-1/2 DIA.	
C=.52	C=.61	C=.61	C=.73	C=.82	C=.98

VALUES OF "C" FOR CIRCULAR
AND SQUARE ORIFICES

ALL DIMENSIONS ARE IN INCHES (MILLIMETERS) UNLESS OTHERWISE SHOWN.

COMPANY NAME: HR GREEN
PROJECT CONTACT: T. SCOTT CREECH, P.E.
CLIENT: VILLAGE OF HINSDALE
DATE PLOTTED: 12/11/2014 2:06:37 PM
FILE NAME: 032_de104-bd12.dgn
PLOT DRIVER: pdf.pltcfg
PEN TABLE: standard-trans-screen-topo.tbl

032_de104-bd12.dgn

FILE NAME = W:\dists\d\22x34\bd12.dgn	USER NAME = gaglianobt	DESIGNED - R. SHAH	REVISED - R. SHAH 10-25-94	STATE OF ILLINOIS DEPARTMENT OF TRANSPORTATION	MANHOLE WITH RESTRICTOR PLATE	F.A. RTE.	SECTION	COUNTY	TOTAL SHEETS	SHEET NO.
		DRAWN -	REVISED - E. GOMEZ 08-28-00			2999	10-00089-00-BR	DUPAGE	157	129
	PLOT SCALE = 50.000 ' / IN.	CHECKED -	REVISED - M. GOMEZ 01-08-01			BD600-04	(BD-12)	CONTRACT NO.		61B11
	PLOT DATE = 1/4/2008	DATE - 09-09-94	REVISED -		SCALE: NONE / SHEET NO. 1 OF 1 SHEETS / STA. / TO STA.	FED. ROAD DIST. NO. 1	ILLINOIS	FED. AID PROJECT		

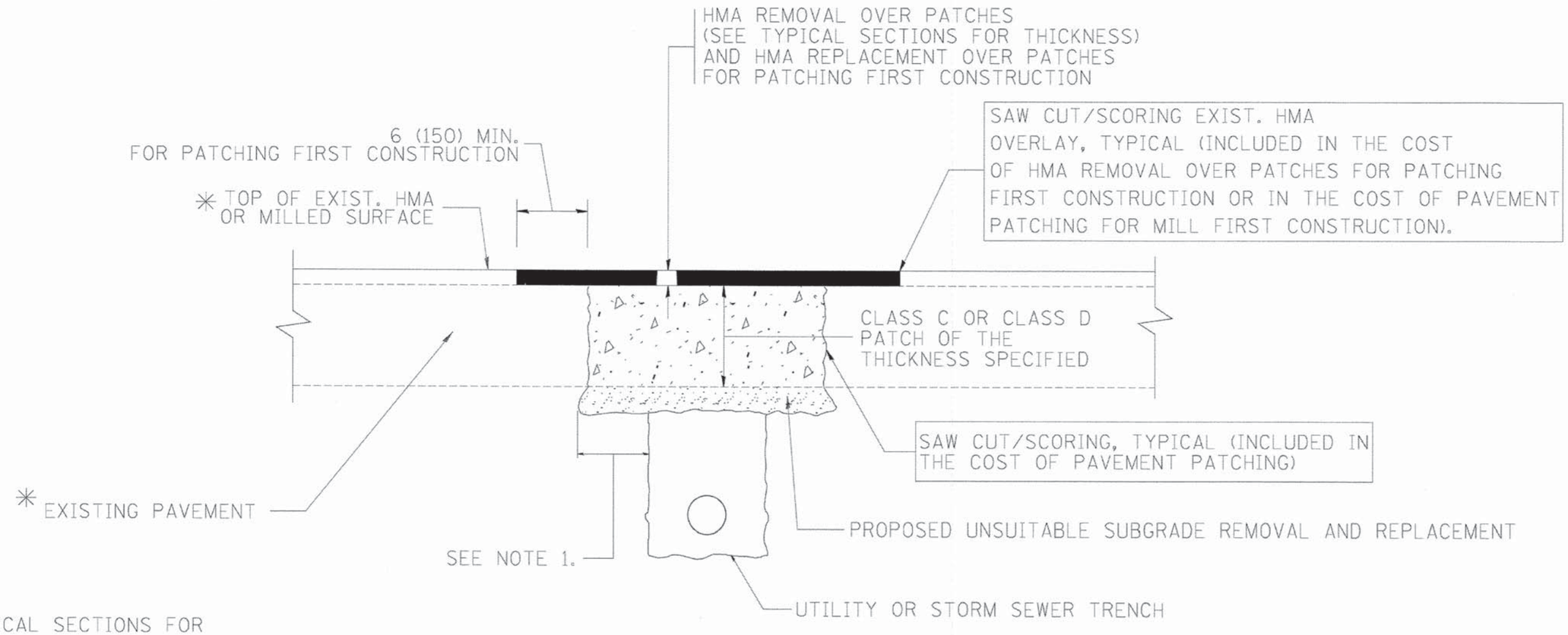

✳ SEE TYPICAL SECTIONS FOR THICKNESS AND MATERIALS

NOTES:

1. THE WIDTH OF THE FULL DEPTH PATCH OVER A TRENCH SHALL BE 12 (300) WIDER ON EACH SIDE OF THE TRENCH.
2. FOR METHOD OF MEASUREMENT AND BASIS OF PAYMENT, SEE RECURRING SPECIAL PROVISION "PATCHING WITH HOT-MIX ASPHALT OVERLAY REMOVAL".

SEQUENCE OF CONSTRUCTION (PATCHING FIRST)

1. REMOVE THE EXISTING HMA MATERIAL OVER THE AREA TO BE PATCHED.
2. REMOVE AND REPLACE WITH CLASS C OR D PATCH.
3. REPLACE HMA MATERIAL OVER THE AREA TO BE PATCHED.

SEQUENCE OF CONSTRUCTION (MILLING FIRST)

1. MILL HMA FIRST IF THERE IS AT LEAST 4½ INCHES OR MORE OF HMA MATERIAL ON TOP OF THE EXISTING PAVEMENT OR IF THE PAVEMENT IS FULL DEPTH HMA. A MINIMUM OF 2 INCHES OF HMA MATERIAL SHALL BE IN PLACE AFTER MILLING.
2. REMOVE AND REPLACE WITH FULL DEPTH CLASS D PATCHES TO TOP OF MILLED SURFACE.

ALL DIMENSIONS ARE IN INCHES (MILLIMETERS) UNLESS OTHERWISE SHOWN.

COMPANY NAME: HR GREEN
PROJECT CONTACT: T. SCOTT GREEN, P.E.
CLIENT: VILLAGE OF HINSDALE
DATE PLOTTED: 10/27/2008 2:09:02 PM
FILE NAME: 032_de105-bd22.dgn
PLOT DRIVER: pdf.pltcfg
PEN TABLE: standard-trans-screen-topo.tbl

FILE NAME = c:\projects\dststd22x34\bd22.dgn	USER NAME = bauerdl	DESIGNED - R. SHAH	REVISED - A. ABBAS 04-27-98	STATE OF ILLINOIS DEPARTMENT OF TRANSPORTATION	PAVEMENT PATCHING FOR HMA SURFACED PAVEMENT			F.A. RTE.	SECTION	COUNTY	TOTAL SHEETS / SHEET NO.
		DRAWN -	REVISED - R. BORO 01-01-07					2999	10-00089-00-BR	DUPAGE	157 / 130
	PLOT SCALE = 50.000 ' / IN.	CHECKED -	REVISED - R. BORO 09-04-07						BD400-04 (BD-22)	CONTRACT NO.	61B11
	PLOT DATE = 10/27/2008	DATE - 10-25-94	REVISED - K. ENG 10-27-08		SCALE: NONE	SHEET NO. 1 OF 1 SHEETS	STA. TO STA.		FED. ROAD DIST. NO. 1	ILLINOIS	FED. AID PROJECT

032_de105-bd22.dgn

FRAME EXTENSION INTO PAVEMENT	INNER HOOP REINFORCEMENT DIAMETER	SEMI CIRCULAR FORM DIAMETER	OUTER HOOP REINFORCEMENT DIAMETER
UP TO 8" (200)	3'-6" (1.1 m)	4'-0" (1.2 m)	5'-0" (1.5 m)
> 8" (200) TO 14" (360)	4'-0" (1.2 m)	4'-6" (1.4 m)	5'-0" (1.5 m)

DESIGNER NOTE:
THIS DETAIL IS TO BE USED WHEN THE GUTTER FLAG IS LESS THAN 24"

NOTES :

1. THE ROUNDOUT AND ADDED REINFORCEMENT WILL NOT BE PAID SEPARATELY, BUT SHALL BE INCLUDED IN THE CONTRACT UNIT PRICE FOR THE PAVEMENT.
2. TRANSVERSE JOINTS MAY BE MOVED TO ACCOMMODATE ROUNDOUT. EDGE OF CIRCULAR JOINT SHALL BE MINIMUM 12" (300) FROM TRANSVERSE JOINT. RELOCATED TRANSVERSE JOINT SHALL BE CONTINUOUS FROM EDGE OF PAVEMENT TO EDGE OF PAVEMENT.
3. SEMI-CIRCULAR FORM SHALL BE REMOVED PRIOR TO DRILL AND GROUT OF TIE BARS.
4. ALL REINFORCED BARS SHALL BE EPOXY COATED.
5. DRILL AND GROUT IS PREFERRED, HOWEVER TIE BARS CAN BE POURED IN PLACE IF CLEARANCE IS PROVIDED TO OUTER EDGE OF FRAME. MINIMUM 2" (50) CLEARANCE.
6. WOOD SHIMS SHALL BE USED TO ADJUST ALL FRAMES. AFTER ADJUSTING MORTAR HAS CURED, THE WOOD SHIMS SHALL BE REMOVED AND THE VOIDS UNDER THE FRAMES FILLED WITH NON SHRINK GROUT.
7. HOOP REINFORCEMENT SHALL BE ONE PIECE CONSTRUCTION.
8. CIRCULAR FRAMES AND GRATES MAY BE SUBSTITUTED.
9. CURB DOWELS MUST BE PLACED LEVEL & TRUE TO ALLOW CONTRACTION MOVEMENT.

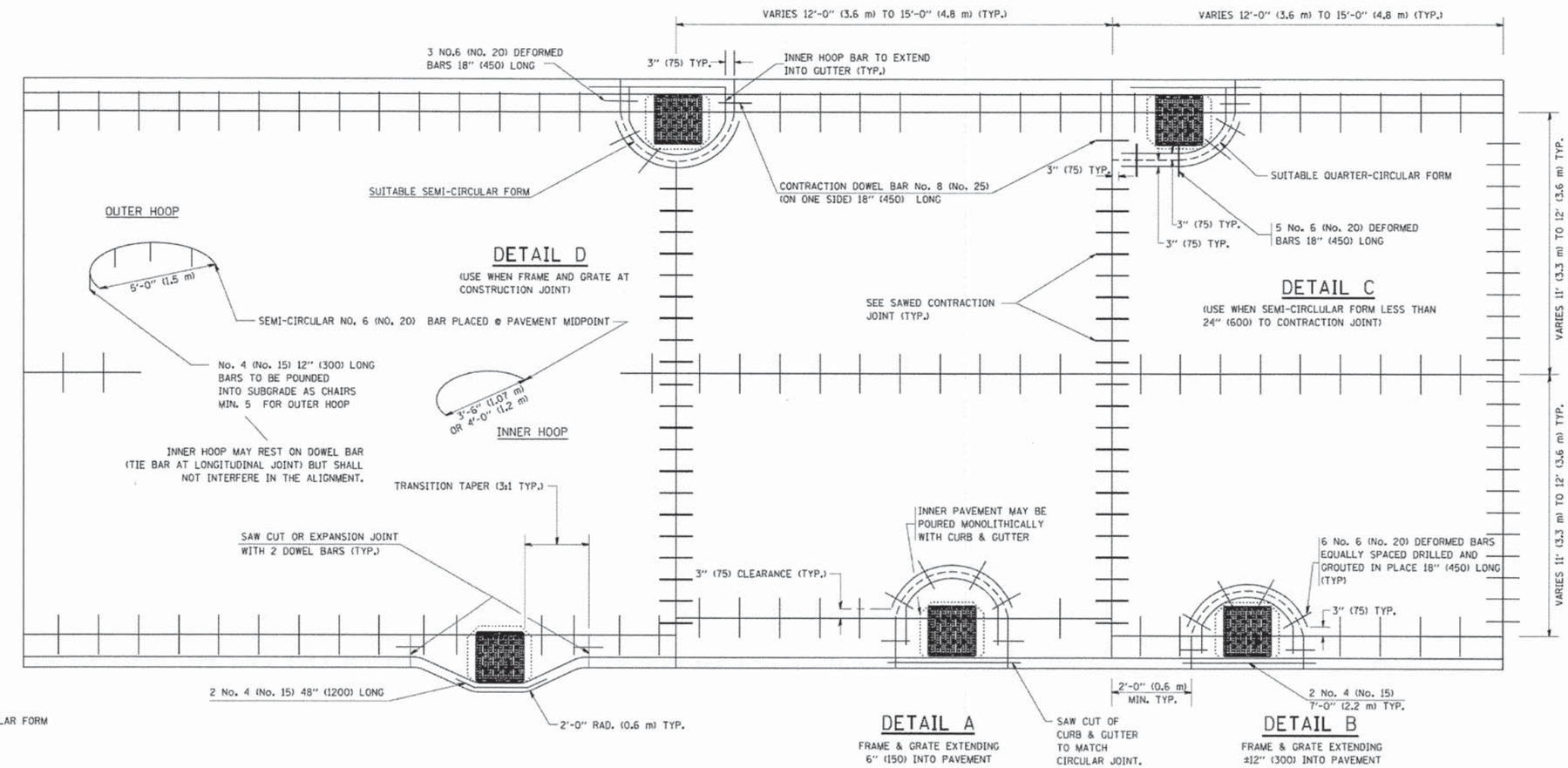

TRANSITION CURB & AND GUTTER INTO PARKWAY
(PREFERRED BECAUSE PAVING OF MAINLINE NOT AFFECTED.)

ALL DIMENSIONS ARE IN INCHES (MILLIMETERS) UNLESS OTHERWISE NOTED

COMPANY NAME: HR GREEN
PROJECT CONTACT: T. SCOTT CREECH, P.E.
CLIENT: VILLAGE OF HINSDALE
DATE PLOTTED: 12/11/2014 2:07:18 PM
FILE NAME: 032_de106-bd48.dgn
PLOT DRIVER: pdf_ym.pltr
PEN TABLE: standard-screen-1600.tbl

FILE NAME = W:\dists\d\22x34\bd48.dgn	USER NAME = gagliaabt	DESIGNED - A. ABBAS	REVISED - T. MATOUSEK 08-28-00	STATE OF ILLINOIS DEPARTMENT OF TRANSPORTATION	PCC PAVEMENT ROUNDOUTS AT CURB AND GUTTER
		DRAWN - TOM MATOUSEK	REVISED - T. MATOUSEK 10-02-00		
	PLOT SCALE = 50.0000 ' / IN.	CHECKED - A. ABBAS	REVISED - T. MATOUSEK 04-25-02		
	PLOT DATE = 1/4/2008	DATE - 01-04-99	REVISED - P. LAFLEUR 08-27-02		SCALE: NONE / SHEET NO. 1 OF 1 SHEETS / STA. / TO STA.

F.A. RTE.	SECTION	COUNTY	TOTAL SHEETS	SHEET NO.
2999	10-00089-00-BR	DUPAGE	157	131
	BD-48	CONTRACT NO.	61B11	
FED. ROAD DIST. NO. 1	ILLINOIS	FED. AID PROJECT		

032_de106-bd48.dgn

TYPICAL APPLICATION

THE USE OF CROSS STREET PAVEMENT SEPARATION JOINTS FOR SKEWED OR LARGE INTERSECTIONS WHERE JOINTS MAY NOT MATCH

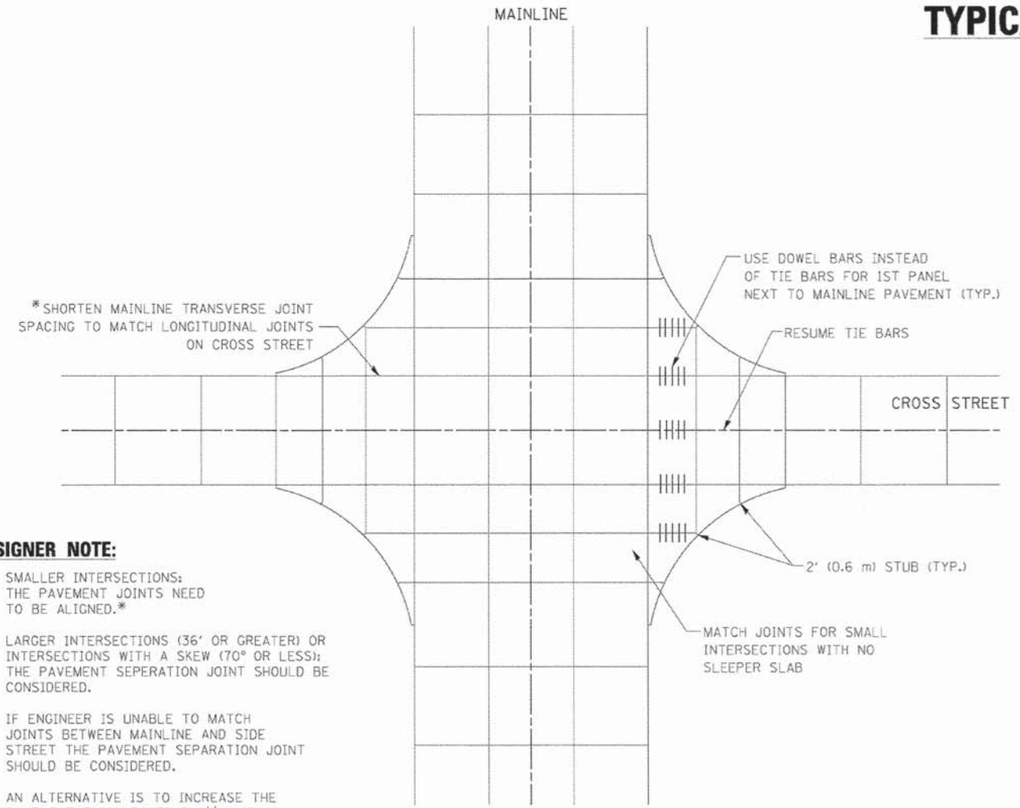

PLAN

DESIGNER NOTE:

1. SMALLER INTERSECTIONS: THE PAVEMENT JOINTS NEED TO BE ALIGNED.*
2. LARGER INTERSECTIONS (36' OR GREATER) OR INTERSECTIONS WITH A SKEW (70° OR LESS): THE PAVEMENT SEPERATION JOINT SHOULD BE CONSIDERED.
3. IF ENGINEER IS UNABLE TO MATCH JOINTS BETWEEN MAINLINE AND SIDE STREET THE PAVEMENT SEPARATION JOINT SHOULD BE CONSIDERED.
4. AN ALTERNATIVE IS TO INCREASE THE PAVEMENT THICKNESSES BY ½" (13 mm) FOR THE LENGTH OF THE AFFECTED PANELS AT THE INTERSECTION.
5. FOR LARGE INTERSECTIONS (6 LANES OR MORE) WHERE JOINTS CAN BE MATCHED, USE #8 (25) DOWEL BARS INSTEAD OF #8 (25) TIE BARS AT EDGE OF MAINLINE PAVEMENT WHEN NO PAVEMENT SEPARATION JOINTS USED.

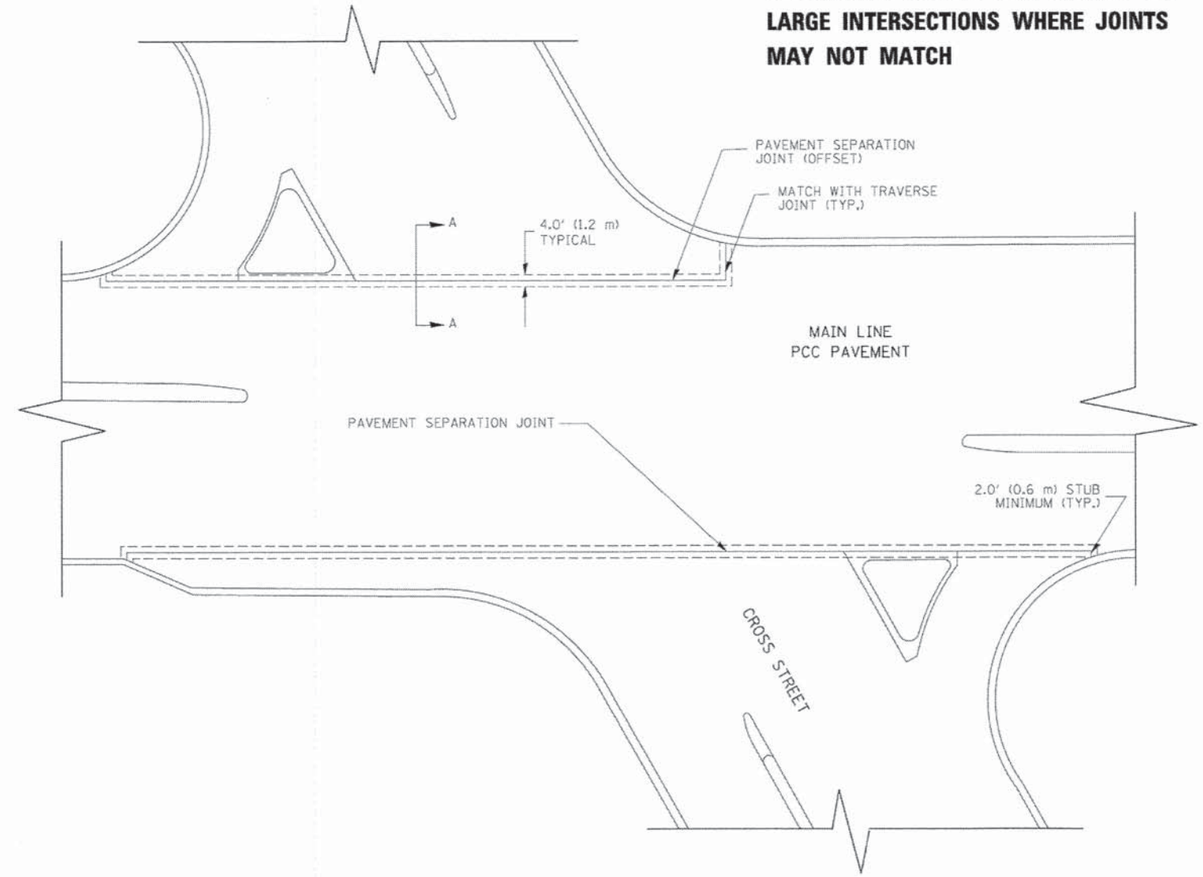

NOTE:

1. JOINT FILLER SHALL CONSIST OF A SHEET OF ½" (13 mm) BITUMINOUS PREFORMED FIBER JOINT FILLER CONFORMING TO ARTICLE 1051.03 OF THE STANDARD SPECIFICATIONS.
2. THE JOINT SHALL BE SEALED WITH A HOT POUR JOINT SEALER CONFORMING TO ARTICLE 1050.02 OF THE STANDARD SPECIFICATIONS.
3. A SINGLE LAYER OF FELT ROOFING PAPER SHALL SERVE AS A BOND BREAKER.
4. JOINT SHALL CONTINUE THROUGH COMBINATION CURB & GUTTER OR PCC SHOULDER.
5. PAVEMENT SEPARATION JOINT IS TO BE PAID FOR AS "SLEEPER SLAB" AND IS TO BE MEASURED IN PLACE BY THE LINEAL FOOT.
6. BOND BREAKER AND ½" (13 mm) JOINT AND FILLER SHALL BE INCIDENTAL TO THE PAY ITEM "SLEEPER SLAB".

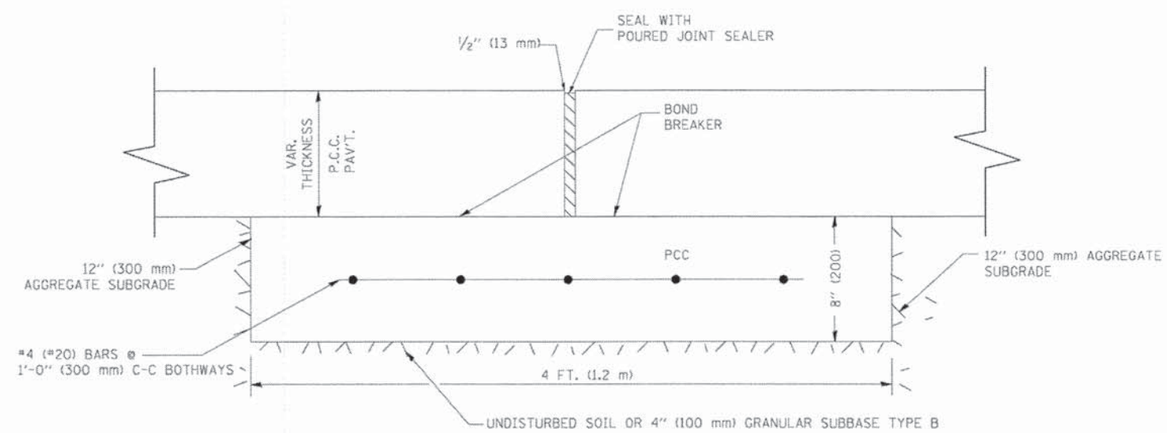

PROPOSED SECTION A–A

COMPANY NAME: HR GREEN
PROJECT CONTACT: T. SCOTT CREECH, P.E.
CLIENT: VILLAGE OF HINSDALE
DATE PLOTTED: 12/11/2014 2:10:12 PM
FILE NAME: 032_de10T-bd52.dgn
PLOT DRIVER: pdf_ywcol
PEN TABLE: standard-trans-screen-1600.tbl

032_de10T-bd52.dgn

FILE NAME = bd52.dgn	USER NAME = leyse	DESIGNED -	REVISED - CADD 06-18-10	STATE OF ILLINOIS DEPARTMENT OF TRANSPORTATION	DETAIL OF PAVEMENT SEPARATION JOINT FOR JOINTED PCC PAVEMENTS AT INTERSECTIONS	F.A. RTE.	SECTION	COUNTY	TOTAL SHEETS	SHEET NO.
		DRAWN -	REVISED -			2999	10-00089-00-BR	DUPAGE	157	132
	PLOT SCALE = 49.9999 ' / IN.	CHECKED -	REVISED -			BD52		CONTRACT NO. 61B11		
	PLOT DATE = 2/25/2011	DATE -	REVISED -		SCALE: NONE / SHEET NO. 1 OF 1 SHEETS / STA. / TO STA.		ILLINOIS FED. AID PROJECT			

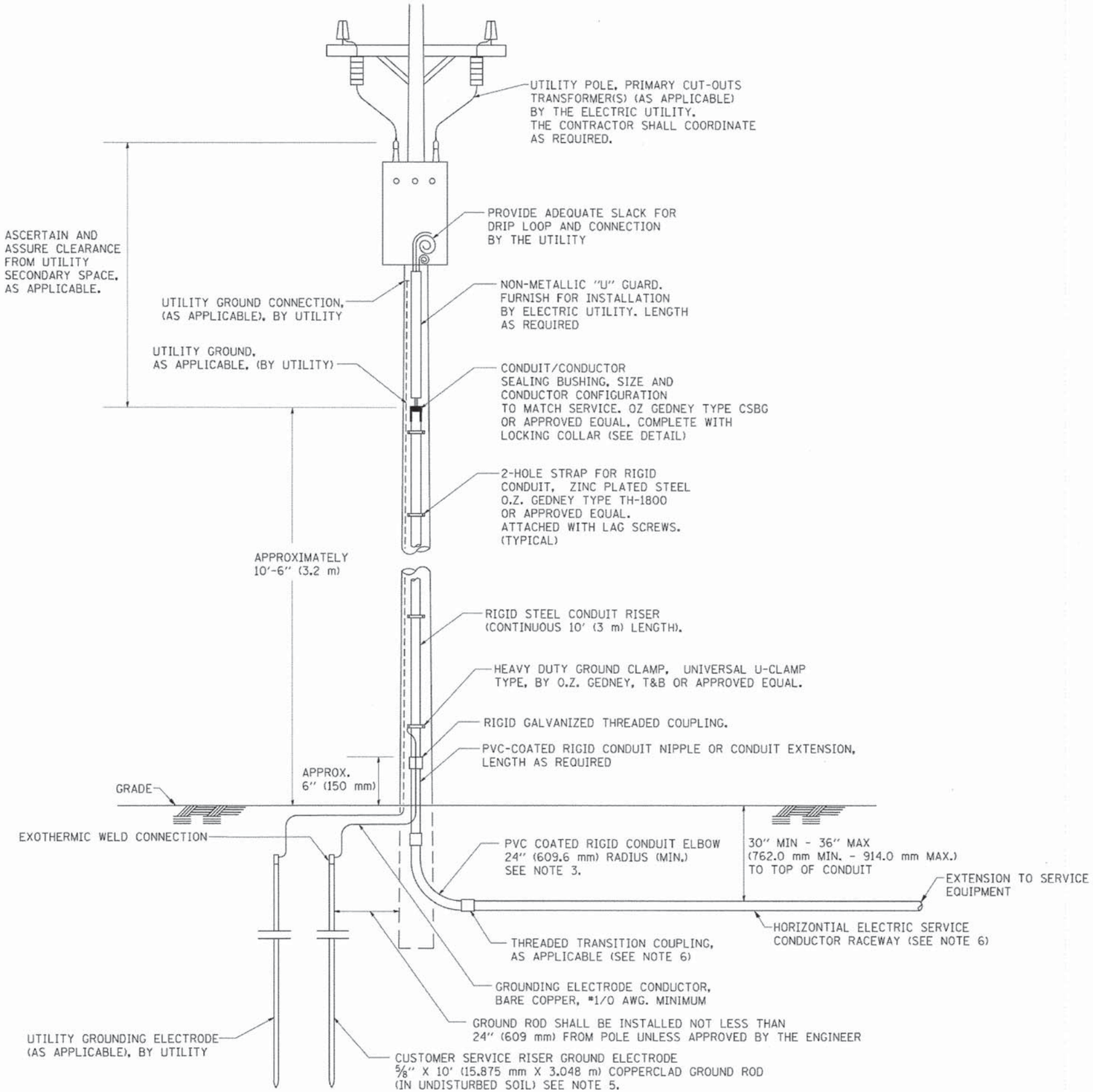

APPLICATION

THIS DETAIL APPLIES FOR LOW VOLTAGE ELECTRIC SERVICE (660 V OR LESS) FROM AN OVERHEAD UTILITY SUPPLY TO SEPERATLY-MOUNTED SERVICE EQUIPMENT.

NOTES

1. SERVICE VOLTAGE SHALL BE AS INDICATED ELSEWHERE IN THE DRAWINGS.
2. UNLESS OTHERWISE INDICATED, ITEMS AND WORK SHALL BE INCLUDED AND PAID AS PART OF THE ELECTRIC UTILITY SERVICE INSTALLATION PAY ITEM.
3. CONDUIT AND CONNECTOR DIAMETER SHALL MATCH THE DIAMETER OF THE SERVICE CONDUCTOR RACEWAY AS INDICATED ON THE PLANS.
4. PVC COATED RACEWAYS AND ACCESSORIES SHALL BE CAREFULLY INSTALLED WITH MFR RECOMMENDED TOOLS AND PROCEDURES TO AVOID DAMAGE. ANY DAMAGE SHALL BE REPAIRED WITH COMPATIBLE PVC TOUCH-UP MATERIAL TO THE SATISFACTION OF THE ENGINEER OR THE DAMAGED MATERIAL SHALL BE REPLACED AT NO ADDITIONAL COST.
5. THE CONTRACTOR SHALL OBTAIN INSPECTION AND APPROVAL BY THE ENGINEER OF SERVICE RISER GROUND ELECTRODE, RISER ELBOW, NIPPLE AND CONNECTION TO SERVICE CONDUCTOR RACEWAY EXTENSION BEFORE BACKFILL AND SHALL ALSO OBTAIN INSPECTION OF SERVICE RISER AND SEALING BUSHING BEFORE UTILITY "U" GUARD INSTALLATION AND SERVICE CONNECTION.
6. THE HORIZONTAL ELECTRIC SERVICE CONDUCTOR RACEWAY SHALL BE AS INDICATED AND SHALL BE MEASURED SEPARATELY FOR PAYMENT. WHEN THE RACEWAY IS PVC-COATED RIGID GALVANIZED STEEL, THE COUPLING SHALL BE THE SAME. WHEN THE RACEWAY IS PVC CONDUIT (IN CONCRETE), THE COUPLING SHALL BE A METALIC TO NON METALIC ADAPTER. WHEN THE RACEWAY IS ENCASED IN CONCRETE, THE CONCRETE SHALL EXTEND TO COVER THE COUPLING.
7. PLANS AND DETAILS INDICATE THE GENERAL NATURE AND REQUIREMENTS. THEY DO NOT SHOW EVERY ACCESSORY AND ATTACHMENT, AND THEY DO NOT RELIEVE THE CONTRACTOR OF THE REQUIREMENTS OF THE SPECIFICATIONS AND SPECIAL PROVISIONS TO ASCERTAIN UTILITY REQUIREMENTS AND TO COORDINATE ACCORDINGLY, FURNISHING ALL ITEMS AND WORK NOT PROVIDED BY THE UTILITY, BUT NECESSARY FOR A COMPLETE SERVICE INSTALLATION IS REQUIRED AND SHALL BE INCLUDED IN THE ELECTRIC UTILITY SERVICE INSTALLATION PAY ITEM.

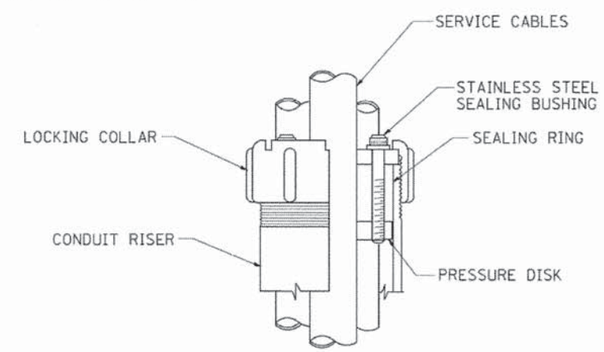

SEALING BUSHING DETAIL

COMPANY NAME: HR GREEN
PROJECT CONTACT: T. SCOTT CREECH, P.E.
CLIENT: VILLAGE OF WINDSOR
DATE PLOTTED: 12/17/08 2:10:00 PM
FILE NAME: 032.de119-be220.dgn
PLOT DRIVER: pdf.pltcfg
PEN TABLE: standard-trans-screen-topo.tbl

FILE NAME = W:\diststd\22x34\be220.dgn	USER NAME = gaglianobt	DESIGNED -	REVISED - 03-03-06	STATE OF ILLINOIS DEPARTMENT OF TRANSPORTATION	ELECTRIC SERVICE INSTALLATION AERIAL, REMOTE DISCONNECT	F.A. RTE.	SECTION	COUNTY	TOTAL SHEETS	SHEET NO.
		DRAWN -	REVISED -			2999	10-00089-00-BR	DUPAGE	157	133
	PLOT SCALE = 50.0000 ' / IN.	CHECKED - MEA	REVISED -				BE-220	CONTRACT NO.		61B11
	PLOT DATE = 1/4/2008	DATE -	REVISED -		SCALE: NONE / SHEET NO. 1 OF 1 SHEETS / STA. / TO STA.	FED. ROAD DIST. NO. 1	ILLINOIS	FED. AID PROJECT		

032.de119-be220.dgn

LIGHT POLE FOUNDATION DEPTH TABLE
30 FT. (9.144 m) TO 35 FT. (10.668 m) MOUNTING HEIGHT

SOIL CONDITIONS	DESIGN DEPTH "D" OF FOUNDATION	
	SINGLE ARM POLE	TWIN ARM POLE
SOFT CLAY Qu = 0.375 TON/SQ. FT.	11'-0" (3.35 m)	12'-8" (3.85 m)
MEDIUM CLAY Qu = 0.75 TON/SQ.FT	9'-0" (2.74 m)	14'-10" (4.52 m)
STIFF CLAY Qu = 1.50 TON/SQ. FT.	7'-6" (2.29 m)	8'-7" (2.61 m)
LOOSE SAND ø = 34°	9'-6" (2.90 m)	10'-7" (3.22 m)
MEDIUM SAND ø = 37.5°	9'-0" (2.74 m)	9'-10" (2.99 m)
DENSE SAND ø = 40°	8'-3" (2.51 m)	9'-7" (2.91 m)

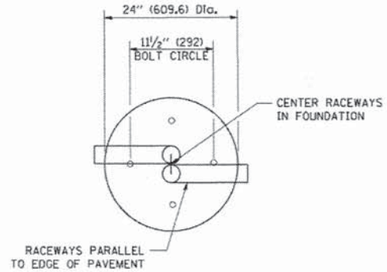

TOP VIEW

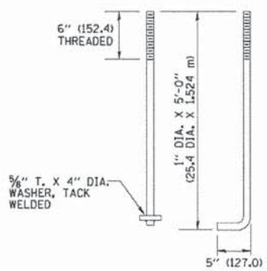

ANCHOR BOLT DETAIL

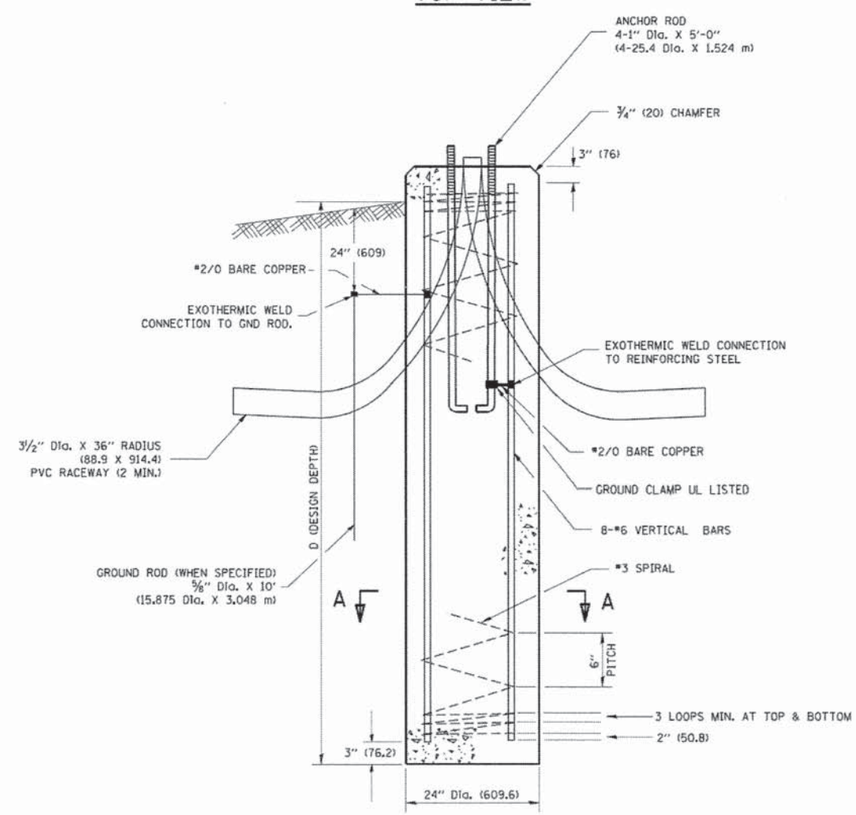

FOUNDATION DETAIL

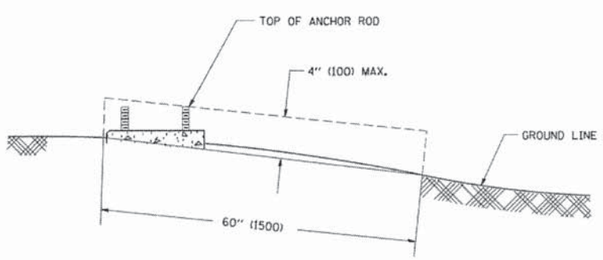

FOUNDATION EXTENSION DETAIL

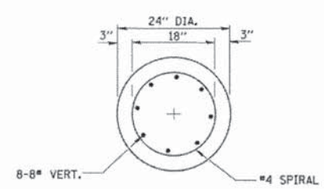

SECTION A-A

NOTES

1. ALL DIMENSIONS ARE IN INCHES (MILLIMETERS) UNLESS OTHERWISE SHOWN.
2. THE ANCHOR RODS AND RACEWAYS SHALL BE PROPERLY SECURED IN PLACE BEFORE THE CONCRETE IN PLACED.
3. THE FOUNDATION SHALL NOT PROTRUDE MORE THAN 4 IN. (100 mm) ABOVE THE FINISHED GRADE WITHIN A 60 IN. (1.5 m) CHORD ACROSS THE FOUNDATION, WITH ANCHOR RODS INCLUDED. IN ACCORDANCE WITH AASHTO GUIDELINES. IF THE FOUNDATION HEIGHT, INCLUDING ANCHOR RODS, EXTENDS BEYOND THESE SPECIFIED LIMITS, THE FOUNDATION SHALL BE REPLACED AT THE CONTRACTOR'S EXPENSE. SEE FOUNDATION EXTENSION DETAIL.
4. THE HOLE FOR THE FOUNDATION SHALL BE MADE BY DRILLING WITH AN AUGER, OF THE SAME DIAMETER AS THE FOUNDATION. IF SOIL CONDITIONS REQUIRE THE USE OF A LINER TO FORM THE HOLE, THE LINER SHALL BE WITHDRAWN AS THE CONCRETE IS DEPOSITED.
5. THE TOP OF THE FOUNDATION SHALL BE CONSTRUCTED LEVEL. A LINER OR FORM SHALL BE USED TO PRODUCE A UNIFORM SMOOTH SIDE TO THE TOP OF THE FOUNDATION. FOUNDATION TOP SHALL BE CHAMFERED ¾-IN. (20 mm).
6. THE CONCRETE SHALL BE CLASS SI. CONCRETE SHALL CURE ACCORDING TO ARTICLE 1020.13 BEFORE LIGHT POLES ARE INSTALLED.
7. THE ANCHOR ROD SHALL BE A HOOK ROD TYPE. COLD BENDING OF THE ANCHOR ROD WILL NOT BE ALLOWED. THE RADIUS OF THE HOOK BEND SHALL NOT BE LESS THAN 4 TIMES THE NOMINAL DIAMETER OF THE ANCHOR ROD. A TACK WELDED ANCHOR ROD MAY BE SUBSTITUTED WITH THE APPROVAL OF THE ENGINEER.
8. THE ANCHOR RODS SHALL BE ACCORDING TO ASTM F1554 GRADE 725 (GRADE 105). NUTS SHALL BE HEXAGON NUTS ACCORDING TO ASTM A 194 2H OR ASTM A 563 DH, AND WASHERS SHALL BE ACCORDING TO ASTM F 436.
9. ANCHOR RODS, NUTS AND WASHERS SHALL BE COMPLETELY GALVANIZED BY EITHER THE HOT-DIPPED PROCESS CONFORMING WITH AASHTO M 232, THE MECHANICAL PLATING METHOD CONFORMING TO AASHTO M 298, CLASS 50 WITH A MAXIMUM COATING THICKNESS OF 150 UM(6 MILS) OR THE ELECTROLYTIC PROCESS ACCORDING TO ASTM F 1136.
10. THE ANCHOR RODS SHALL BE THREADED A MINIMUM OF 6 INCHES (150 mm) WITH A MINIMUM OF 3 INCHES (75 mm) OF THREADED ANCHOR ROD EMBEDDED IN THE FOUNDATION.
11. ANCHOR RODS SHALL PROJECT 2¾" (69.9 mm) ABOVE THE TOP OF THE FOUNDATION. IF BREAKAWAY COUPLINGS ARE SPECIFIED, THE CONTRACTOR SHALL CAREFULLY COORDINATE THE ANCHOR ROD PROJECTION WITH THE INSTALLATION REQUIREMENTS OF THE BREAKAWAY COUPLINGS.
12. THE CONTRACTOR SHALL USE A #3 SPIRAL AT 6" (152.4 mm) PITCH OR MAY SUBSTITUTE #3 TIES AT 12" (304.8 mm) O.C. WITH THE APPROVAL OF THE ENGINEER.
13. THE CABLE TRENCHES AND FOUNDATION SHALL BE BACK FILLED AND COMPACTED AS SPECIFIED BEFORE THE LIGHT POLE IS ERECTED.
14. THE RACEWAYS SHALL PROJECT 1" (25.4 mm) ABOVE THE TOP OF THE FOUNDATION.

COMPANY NAME: HR GREEN
PROJECT CONTACT: T. SCOTT GREEN, P.E.
CLIENT: VILLAGE OF HINSDALE
DATE PLOTTED: 12/11/2014 01:41 PM
FILE NAME: 032_det08-be300.dgn
PLOT DRIVER: pdf_driver
PEN TABLE: standard-trans-screen-topo.tbl

FILE NAME = W:\dwstd\22x34\be300.dgn	USER NAME = gaglianobt	DESIGNED -	REVISED -	STATE OF ILLINOIS DEPARTMENT OF TRANSPORTATION	LIGHT POLE FOUNDATION 30' (9.144 m) TO 35' (10.668 m) M.H. 11 1/2" (292 mm) BOLT CIRCLE	F.A. RTE.	SECTION	COUNTY	TOTAL SHEETS	SHEET NO.
		DRAWN -	REVISED -			2999	10-00089-00-BR	DUPAGE	157	134
	PLOT SCALE = 50.0000 ' / IN.	CHECKED -	REVISED -				BE-300	CONTRACT NO.		61B11
	PLOT DATE = 1/4/2008	DATE -	REVISED -		SCALE: NONE / SHEET NO. 1 OF 1 SHEETS / STA. / TO STA.	FED. ROAD DIST. NO. 1	ILLINOIS	FED. AID PROJECT		

032_det08-be300.dgn

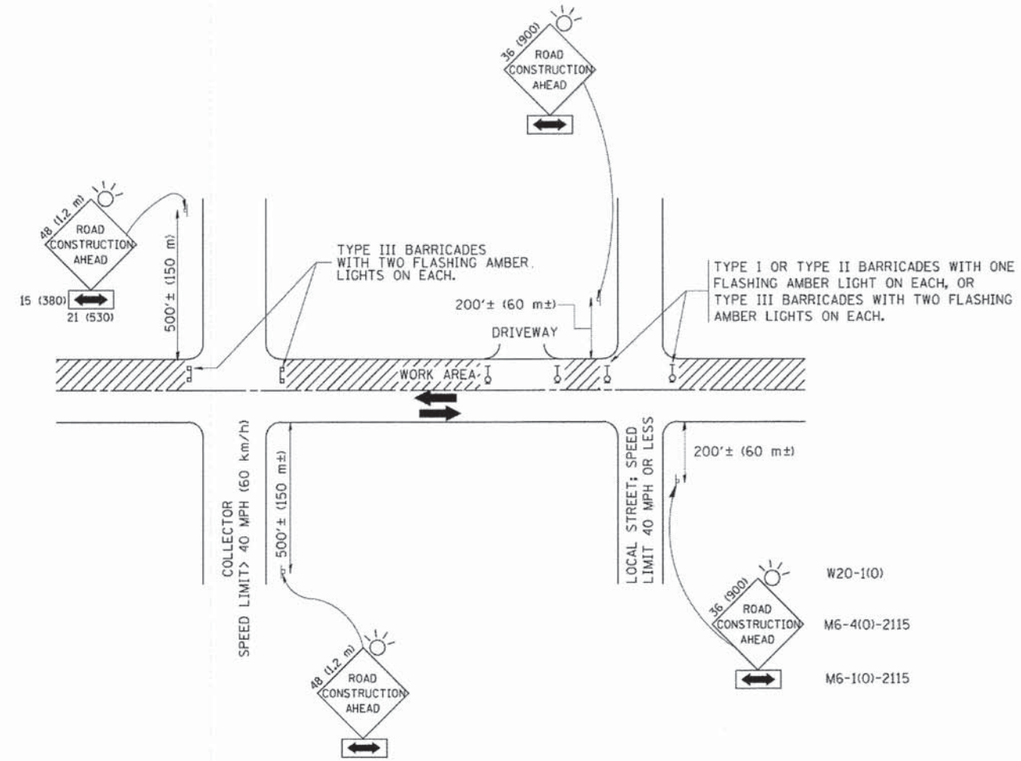

TRAFFIC CONTROL AND PROTECTION FOR SIDE ROADS, INTERSECTIONS, AND DRIVEWAYS

NOTES:

A. FOR NO LANE RESTRICTION ON THE SIDE ROAD OR DRIVEWAYS

1. SIDE ROAD WITH A SPEED LIMIT OF 40 MPH (60 km/h) OR LESS AS SHOWN ON THE DRAWING AND AS DIRECTED BY THE ENGINEER:

   a) ONE **ROAD CONSTRUCTION AHEAD** SIGN 36 x 36 (900x900) WITH A FLASHER AND FLAG MOUNTED ON IT APPROXIMATELY 200' (60 m) IN ADVANCE OF THE MAIN ROUTE.

   b) THE CLOSED PORTION OF THE MAIN ROUTE SHALL BE PROTECTED BY BLOCKING WITH TYPE I, TYPE II OR TYPE III BARRICADES. 1/3 OF THE CROSS SECTION OF THE CLOSED PORTION.

2. SIDE ROAD WITH A SPEED LIMIT GREATER THAN 40 MPH (60 km/h) AS SHOWN ON THE DRAWING AND AS DIRECTED BY THE ENGINEER:

   a) ONE **ROAD CONSTRUCTION AHEAD** SIGN 48 x 48 (1.2 m x 1.2 m) WITH A FLASHER MOUNTED ON IT APPROXIMATELY 500' (150 m) IN ADVANCE OF THE MAIN ROUTE.

   b) THE CLOSED PORTION OF THE MAIN ROUTE SHALL BE PROTECTED BY BLOCKING WITH TYPE III BARRICADES, 1/2 OF THE CROSS SECTION OF THE CLOSED PORTION.

3. WHEN THE SIDE ROAD LIES BETWEEN THE BEGINNING OF THE MAINLINE SIGNING AND THE WORK ZONE, A SINGLE HEADED ARROW (M6-1) SHALL BE USED IN LIEU OF THE DOUBLE HEADED ARROW (M6-4).

B. FOR A LANE CLOSURE ON A SIDE ROAD OR DRIVEWAY:

USE APPLICABLE PORTIONS OF THE TYPICAL APPLICATION OF TRAFFIC CONTROL DEVICES (STD. 701501, STD. 701606 OR THE APPROPRIATE STANDARD). THE SPACING OF SIGNS AND BARRICADES SHALL BE ADJUSTED FOR FIELD CONDITIONS AS DIRECTED BY THE ENGINEER. THE DIRECTIONAL ARROW SHALL BE COVERED OR REMOVED WHEN NO LONGER CONSISTENT WITH THE SIDE ROAD LANE CLOSURE.

C. ADVANCE WARNING SIGNS ARE TO BE OMITTED ON DRIVEWAY UNLESS OTHERWISE NOTED.

D. THE TRAFFIC CONTROL AND PROTECTION FOR SIDE ROADS, INTERSECTIONS, AND DRIVEWAYS SHALL BE INCIDENTAL TO THE COST OF SPECIFIED TRAFFIC CONTROL STANDARDS OR ITEMS.

All dimensions are in millimeters (inches) unless otherwise shown.

COMPANY NAME: HR GREEN
PROJECT CONTACT: T. SCOTT CREECH, P.E.
DATE PLOTTED: WILLIAM DONNELLY
DATE PLOTTED: 12/11/2014 2:15:17 PM
FILE NAME: 032_de109-tc10.dgn
PLOT DRIVER: pdf.pltcfg
PEN TABLE: standard-trans-screen-tabo.tbl

FILE NAME = W:\distetd\22x34\tc10.dgn	USER NAME = geglenobt	DESIGNED - LHA	REVISED - J. OBERLE 10-18-95	STATE OF ILLINOIS DEPARTMENT OF TRANSPORTATION	TRAFFIC CONTROL AND PROTECTION FOR SIDE ROADS, INTERSECTIONS, AND DRIVEWAYS	F.A. RTE.	SECTION	COUNTY	TOTAL SHEETS	SHEET NO.
		DRAWN -	REVISED - A. HOUSEH 03-06-96			2999	10-00089-00-BR	DUPAGE	157	135
	PLOT SCALE = 50.000 ' / IN.	CHECKED -	REVISED - A. HOUSEH 10-15-96				TC-10	CONTRACT NO.		61B11
	PLOT DATE = 1/4/2008	DATE - 06-89	REVISED - T. RAMMACHER 01-06-00		SCALE: NONE / SHEET NO. 1 OF 1 SHEETS / STA. / TO STA.	FED. ROAD DIST. NO. 1	ILLINOIS	FED. AID PROJECT		

032_de109-tc10.dgn

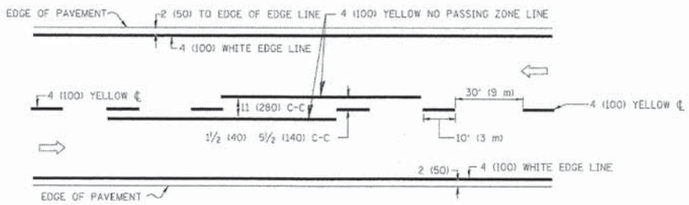

2-LANE ROADWAY

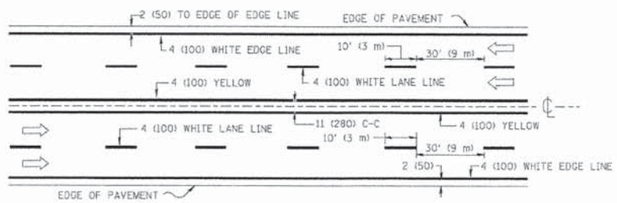

MULTI-LANE UNDIVIDED

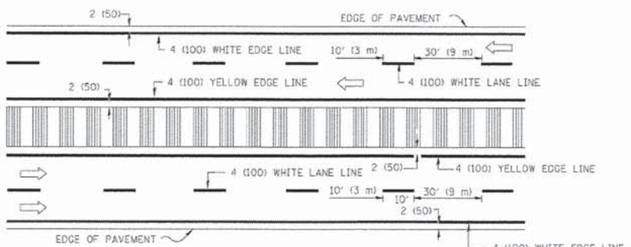

MULTI-LANE DIVIDED
WITH MOUNTABLE MEDIAN

NOTE: MEDIANS WITH BARRIER CURB DO NOT REQUIRE AN EDGE LINE

TYPICAL LANE AND EDGE LINE MARKING

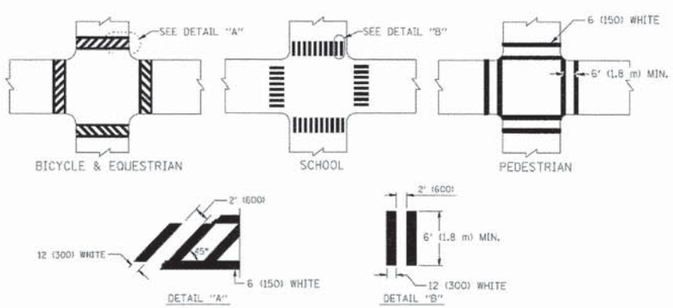

TYPICAL CROSSWALK MARKING

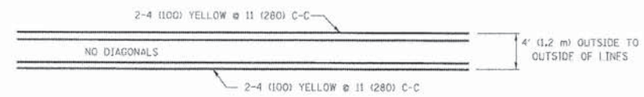

4' (1.2 m) WIDE MEDIANS ONLY

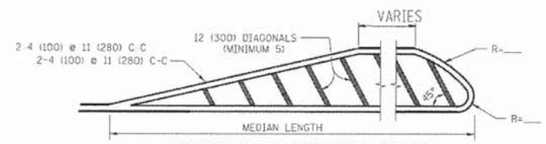

FOR MEDIAN LENGTHS WHERE DIAGONAL SPACING CANNOT BE ATTAINED, USE 5 (FIVE) EQUALLY SPACED DIAGONAL LINES.

DIAGONAL LINE SPACING: 50' (15 m) C-C (LESS THAN 30MPH (50 km/h))
75' (25 m) C-C 30MPH (50 km/h) TO 45MPH (70 km/h))
150' (45 m) C-C (MORE THAN 45MPH (70 km/h))

MEDIANS OVER 4' (1.2 m) WIDE

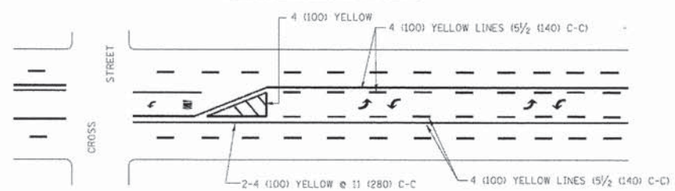

A MINIMUM OF TWO PAIRS OF TURN ARROWS SHALL BE USED, WHITE IN COLOR. ADDITIONAL PAIRS SHALL BE PLACED AT 200' (60 m) TO 300' (90 m) INTERVALS.

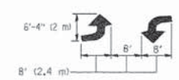

MEDIAN WITH TWO-WAY LEFT TURN LANE

TYPICAL PAINTED MEDIAN MARKING

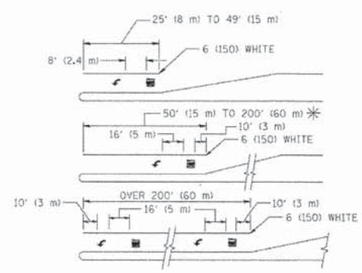

FULL SIZE LETTERS 8' (2.4 m) AND ARROWS SHALL BE USED.
AREA = 15.6 SQ. FT. (1.5 m^2) **ONLY** AREA = 20.8 SQ. FT. (1.9 m^2)

✳ TURN LANES IN EXCESS OF 400' (120 m) IN LENGTH MAY HAVE AN ADDITIONAL SET OF ARROW - "ONLY" INSTALLED MIDWAY BETWEEN THE OTHER TWO SETS OF ARROW - "ONLY".

TYPICAL LEFT (OR RIGHT) TURN LANE

TYPICAL TURN LANE MARKING

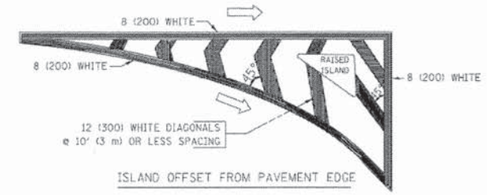

ISLAND OFFSET FROM PAVEMENT EDGE

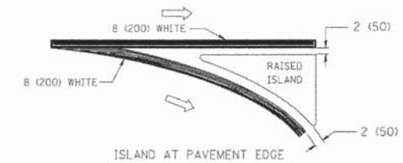

ISLAND AT PAVEMENT EDGE

TYPICAL ISLAND MARKING

TYPE OF MARKING	WIDTH OF LINE	PATTERN	COLOR	SPACING / REMARKS
CENTERLINE ON 2 LANE PAVEMENT	4 (100)	SKIP-DASH	YELLOW	10' (3 m) LINE WITH 30' (9 m) SPACE
CENTERLINE ON MULTI-LANE UNDIVIDED PAVEMENT	2 @ 4 (100)	SOLID	YELLOW	11 (280) C-C
NO PASSING ZONE LINES: FOR ONE DIRECTION FOR BOTH DIRECTIONS	4 (100) 2 @ 4 (100)	SOLID SOLID	YELLOW YELLOW	5½ (140) C-C FROM SKIP-DASH CENTERLINE 11 (280) C-C OMIT SKIP-DASH CENTERLINE BETWEEN
LANE LINES	4 (100) 5 (125) ON FREEWAYS	SKIP-DASH SKIP-DASH	WHITE WHITE	10' (3 m) LINE WITH 30' (9 m) SPACE
DOTTED LINES (EXTENSIONS OF CENTER, LANE OR TURN LANE MARKINGS)	SAME AS LINE BEING EXTENDED	SKIP-DASH	SAME AS LINE BEING EXTENDED	2' (600) LINE WITH 6' (1.8 m) SPACE
EDGE LINES	4 (100)	SOLID	YELLOW-LEFT WHITE-RIGHT	OUTLINE MOUNTABLE MEDIANS IN YELLOW; EDGE LINES ARE NOT USED NEXT TO BARRIER CURB
TURN LANE MARKINGS	6 (150) LINE; FULL SIZE LETTERS & SYMBOLS (8' (2.4m))	SOLID	WHITE	SEE TYPICAL TURN LANE MARKING DETAIL
TWO WAY LEFT TURN MARKING	2 @ 4 (100) EACH DIRECTION 8' (2.4m) LEFT ARROW	SKIP-DASH AND SOLID IN PAIRS	YELLOW WHITE	10' (3 m) LINE WITH 30' (9 m) SPACE FOR SKIP-DASH; 5½ (140) C-C BETWEEN SOLID LINE AND SKIP-DASH LINE SEE TYPICAL TWO-WAY LEFT TURN MARKING DETAIL
CROSSWALK LINES (PEDESTRIAN) A. DIAGONALS (BIKE & EQUESTRIAN) B. LONGITUDINAL BARS (SCHOOL)	2 @ 6 (150) 12 (300) @ 45° 12 (300) @ 90°	SOLID SOLID SOLID	WHITE WHITE WHITE	NOT LESS THAN 6' (1.8 m) APART 2' (600) APART 2' (600) APART SEE TYPICAL CROSSWALK MARKING DETAILS.
STOP LINES	24 (600)	SOLID	WHITE	PLACE 4' (1.2 m) IN ADVANCE OF AND PARALLEL TO CROSSWALK, IF PRESENT. OTHERWISE, PLACE AT DESIRED STOPPING POINT. PARALLEL TO CROSSROAD CENTERLINE, WHERE POSSIBLE
PAINTED MEDIANS	2 @ 4 (100) WITH 12 (300) DIAGONALS @ 45° NO DIAGONALS USED FOR 4' (1.2 m) WIDE MEDIANS	SOLID	YELLOW: TWO WAY TRAFFIC WHITE: ONE WAY TRAFFIC	11 (280) C-C FOR THE DOUBLE LINE SEE TYPICAL PAINTED MEDIAN MARKING.
GORE MARKING AND CHANNELIZING LINES	8 (200) WITH 12 (300) DIAGONALS @ 45°	SOLID	WHITE	DIAGONALS: 15' (4.5 m) C-C (LESS THAN 30MPH (50 km/h)) 20' (6 m) C-C 30MPH (50 km/h) TO 45MPH (70 km/h)) 30' (9 m) C-C (OVER 45MPH (70 km/h))
RAILROAD CROSSING	24 (600) TRANSVERSE LINES; "RR" 15 6" (1.8 m) LETTERS; 16 (400) LINE FOR "X"	SOLID	WHITE	SEE STATE STANDARD 780001 AREA OF: "RR"=3.6 SQ. FT. (0.33 m^2) EACH "X"=54.0 SQ. FT. (5.0 m^2)
SHOULDER DIAGONALS	12 (300) @ 45°	SOLID	WHITE - RIGHT YELLOW - LEFT	50' (15 m) C-C (LESS THAN 30MPH (50 km/h)) 75' (25 m) C-C (30 MPH (50 km/h) TO 45MPH (70 km/h)) 150' (45 m) C-C (OVER 45MPH (70 km/h))

FOR FURTHER DETAILS ON PAVEMENT MARKING REFER TO STANDARD SPECIFICATIONS FOR ROAD AND BRIDGE CONSTRUCTION AND STATE STANDARD 780001.

All dimensions are in inches (millimeters) unless otherwise shown.

COMPANY NAME: HR GREEN
PROJECT CONTACT: T. SCOTT GREEN, P.E.
CLIENT: VILLAGE OF HINSDALE
DATE PLOTTED: 12/11/2014 2:21:03 PM
FILE NAME: C:\PW_WORK\DRIVAKOSGN\D0109315\TC13.DGN
PLOT DRIVER: pdf_ylwpt
PEN TABLE: standard-trans-screen-topo.tbl

FILE NAME = c:\pw_work\pwidot\drivakosgn\d0109315\tc13.dgn	USER NAME = drivakosgn	DESIGNED - EVERS	REVISED -T. RAMMACHER 10-27-94
		DRAWN -	REVISED -C. JUCIUS 09-09-09
	PLOT SCALE = 50.000 ' / IN.	CHECKED -	REVISED -
	PLOT DATE = 9/9/2009	DATE - 03-19-90	REVISED -

STATE OF ILLINOIS
DEPARTMENT OF TRANSPORTATION

DISTRICT ONE
TYPICAL PAVEMENT MARKINGS

SCALE: NONE | SHEET NO. 1 OF 1 SHEETS | STA. | TO STA.

F.A. RTE.	SECTION	COUNTY	TOTAL SHEETS	SHEET NO.
2999	10-00089-00-BR	DUPAGE	157	136
	TC-13	CONTRACT NO. 61B11		
FED. ROAD DIST. NO. 1	ILLINOIS	FED. AID PROJECT		

032_de10-tc13.dgn

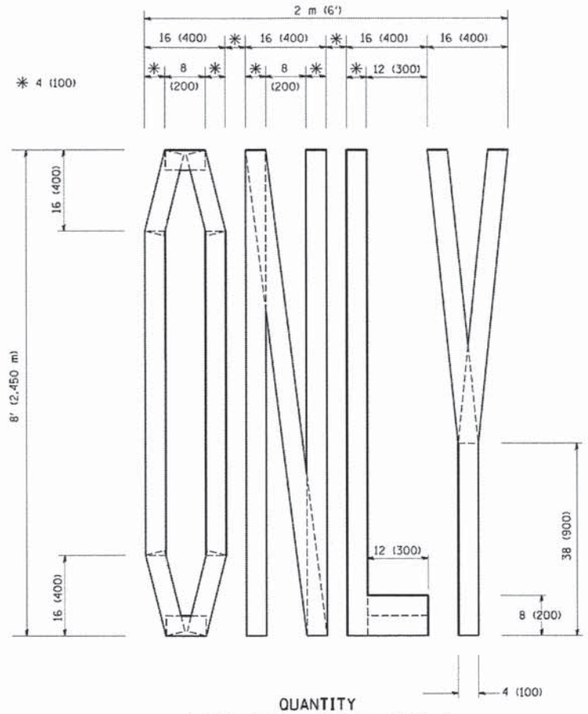

QUANTITY
4 (100) LINE = 64.1 ft. (19.7 m)
21.1 sq. ft. (1.97 sq. m)

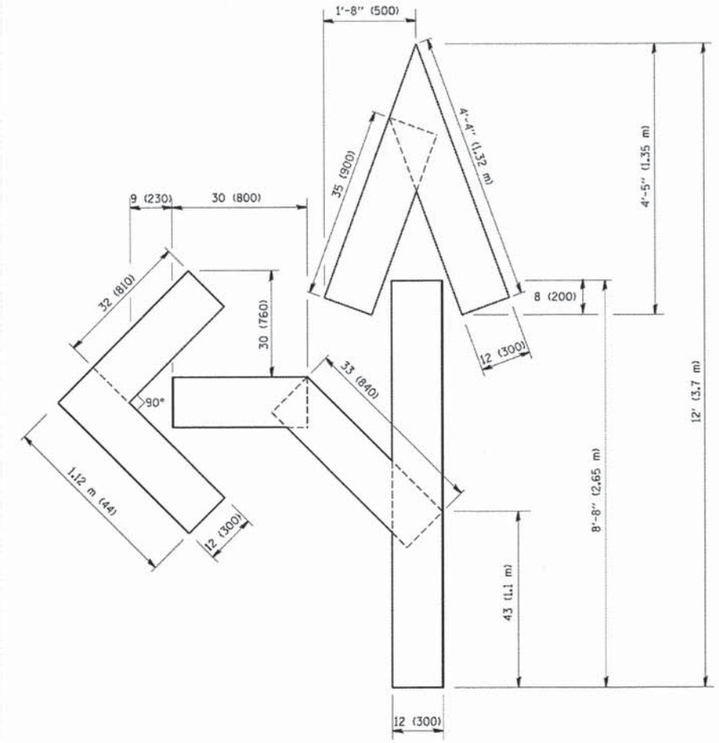

QUANTITY
4 (100) LINE = 82.5 ft. (25.3 m)
27.5 sq. ft. (2.53 sq. m)

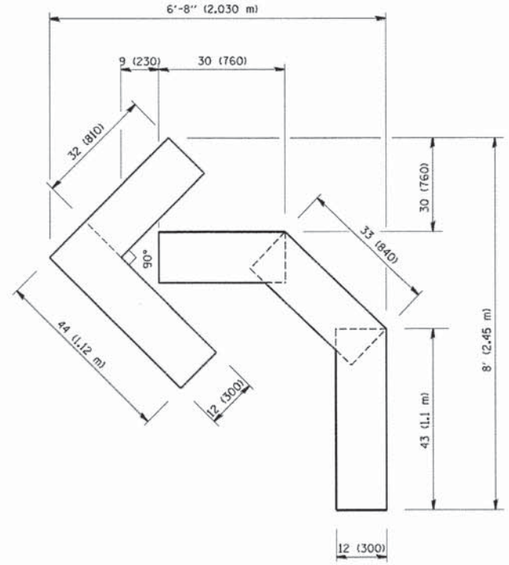

QUANTITY
4 (100) LINE = 45.5 ft. (13.9 m)
15.2 sq. ft. (1.39 sq. m)

All dimensions are in inches (millimeters) unless otherwise shown.

COMPANY NAME: HR GREEN
PROJECT CONTACT: T. SCOTT CREECH, P.E.
CLIENT: VILLAGE OF HINSDALE
DATE PLOTTED: 12/11/2014 2:19:43 PM
FILE NAME: 032.de11-tc16.dgn
PLOT DRIVER: pdf.pltd
PEN TABLE: standard-trans-screen-1000.tbl

FILE NAME = W:\diststd\22x34\tc16.dgn	USER NAME = geglenobt	DESIGNED -	REVISED -T. RAMMACHER 06-05-96	STATE OF ILLINOIS DEPARTMENT OF TRANSPORTATION	PAVEMENT MARKING LETTERS AND SYMBOLS FOR TRAFFIC STAGING	F.A. RTE.	SECTION	COUNTY	TOTAL SHEETS	SHEET NO.
		DRAWN -	REVISED -T. RAMMACHER 11-04-97			2999	10-00089-00-BR	DUPAGE	157	137
	PLOT SCALE = 50.0000 ' / IN.	CHECKED -	REVISED -T. RAMMACHER 03-02-98				TC-16	CONTRACT NO.		61B11
	PLOT DATE = 1/4/2008	DATE - 09-18-94	REVISED -E. GOMEZ 08-28-00		SCALE: NONE / SHEET NO. 1 OF 1 SHEETS / STA. / TO STA.	FED. ROAD DIST. NO. 1	ILLINOIS	FED. AID PROJECT		

032.de11-tc16.dgn

DETAIL NO. 3

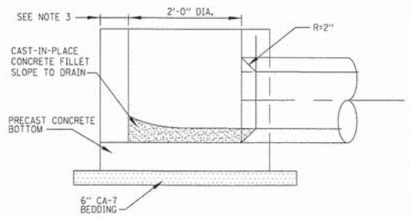

NO SCALE

NOTES:
1. SEE CASTING INSTALLATION AND ADJUSTMENT DETAIL FOR CASTING REQUIREMENTS.
2. STRUCTURE SHALL COMPLY WITH ASTM C478.
3. WALL THICKNESS SHALL BE IN ACCORDANCE WITH IDOT HIGHWAY STANDARD 602301

VILLAGE OF HINSDALE
STANDARD DETAIL
FOR
INLETS

REV:	
DATE:	APRIL 2008
FILE:	STORM\INLET

DETAIL NO. 4

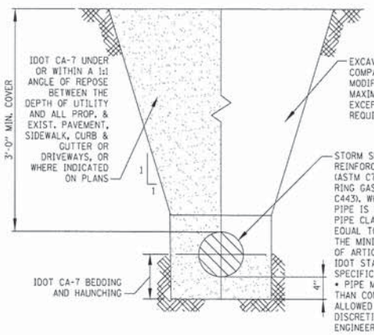

NO SCALE

PUBLIC STORM SEWER ONLY:
THE STORM SEWER SHALL BE TELEVISED FOLLOWING THE INSTALLATION OF THE COMMONWEALTH EDISON AND NICOR UNDERGROUND UTILITIES AND PRIOR TO THE ISSUANCE OF THE FIRST CERTIFICATE OF FINAL OCCUPANCY.
*NOTE: TELEVISING NOT REQUIRED ON PRIVATE STORM SEWER.

VILLAGE OF HINSDALE
STANDARD DETAIL
FOR
STORM SEWER
INSTALLATION

REV:	
DATE:	APRIL 2008
FILE:	STORM\STS1

DETAIL NO. 6

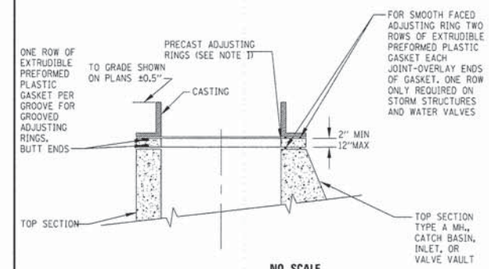

NO SCALE

NOTES:
1. THERE SHALL BE A MAXIMUM OF 2 ADJUSTING RINGS WITH A MAXIMUM TOTAL HEIGHT OF 12".
2. ANY ADJUSTMENT OF 2" OR LESS SHALL USE PREFORMED RUBBER ADJUSTING RINGS, WHICH ARE 2" OR LESS IN THICKNESS.
3. THE FOLLOWING CASTING, OR APPROVED EQUAL, SHALL BE UTILIZED AS INDICATED:
   A. SANITARY MANHOLES: IDOT TYPE 1 FRAME, CLOSED WATERTIGHT LID WITH CONCEALED PICKHOLE, O-RING GASKETS, AND "HINSDALE" AND "SANITARY" CAST IN LID.
   B. WATER VALVE VAULTS: IDOT TYPE 1 FRAME, CLOSED WATERIGHT LID WITH CONCEALED PICKHOLE, O-RING GASKETS, AND "HINSDALE" AND "WATER" CAST IN LID.
   C. STORM MANHOLES: IDOT TYPE 1 FRAME, CLOSED LID WITH CONCEALED PICKHOLE, AND "HINSDALE" AND "STORM" CAST IN LID, FOR LIDS INDICATED AS "CLOSED" ON PLANS. FOR LIDS INDICATED AS "OPEN" ON PLANS, USE THE SAME CASTING, BUT WITH AN OPEN FLAT GRATE. THE "DRAINS TO CREEK" LOGO SHALL BE CAST INTO THE LID.
   D. DRAINAGE STRUCTURES IN OTHER AREAS WITH UNPAVED SURFACES: IDOT TYPE 1 FRAME, CLOSED LID WITH CONCEALED PICKHOLE AND "HINSDALE" AND "STORM" CAST IN LID FOR LIDS INDICATED AS "CLOSED ON PLANS. FOR LIDS INDICATED AS "OPEN ON PLANS, USE THE SAME CASTING, BUT WITH AND OPEN FLATE GRATE. THE "DRAINS TO CREEK" LOGO SHALL BE CAST INTO THE LID.
4. NO FILTER FABRIC ALLOWED UNDER FRAMES OR GRATES. ALL STRUCTURES, EXCLUDING CURB STRUCTURES, SHALL HAVE INLET FILTERS INSTALLED. ALL INLET PROTECTION SHOULD BE IN ACCORDANCE WITH THE APPROVED STORMWATER POLLUTION PREVENTION PLAN.
5. "BEEHIVE" TYPE GRATES SHALL NOT BE USED.
6. IN PRIVATE STORM SEWER APPLICATIONS, "HINSDALE" LABEL SHALL BE OMITTED FROM THE LID.

VILLAGE OF HINSDALE
STANDARD DETAIL
FOR
CASTING INSTALLATION
AND ADJUSTING

REV:	
DATE:	APRIL 2008
FILE:	STORM\TYPCASTADJ

DETAIL NO. 7

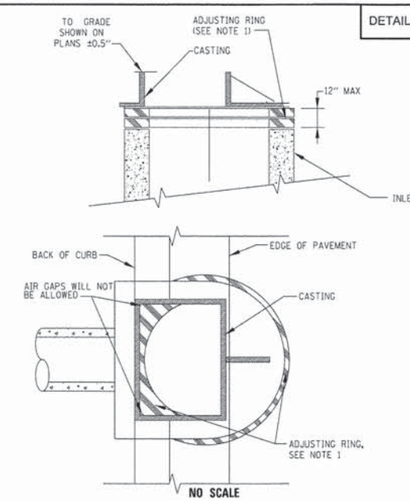

NO SCALE

NOTES:
1. THE MAXIMUM NUMBER OF ADJUSTING RINGS SHALL BE TWO. THE MAXIMUM HEIGHT OF ADJUSTMENT SHALL BE 12". ONE ROW OF EXTUDIBLE PREFORMED PLASTIC GASKET SHALL BE USED ON ALL CONCRETE ADJUSTING RINGS.
2. ANY ADJUSTMENT OF 2" OR LESS SHALL USE PREFORMED RUBBER ADJUSTING RINGS, WHICH ARE 2" OR LESS IN THICKNESS.
3. IF THE CASTING MUST BE INSTALLED ON A SLOPE, PREFORMED RUBBER TAPERED RINGS MUST BE USED.
4. THE FOLLOWING CASTING, OR APPROVED EQUAL, SHALL BE UTILIZED AS INDICATED:
   A. DRAINAGE STRUCTURES IN MOUNTABLE CURB AND GUTTER: EAST JORDAN IRON WORKS * 7171 WITH TYPE M1 GRATE, OR APPROVED EQUAL. THE "DRAINS TO CREEK" LOGO SHALL BE CAST INTO THE GRATE.
   B. DRAINAGE STRUCTURES IN BARRIER CURB AND GUTTER: IDOT TYPE 11 FRAME AND GRATE. THE "DRAINS TO CREEK" LOGO SHALL BE CAST INTO THE GRATE OR HOOD.
5. EJIW *7171 CASTINGS CAN OVERLAP STRUCTURE EDGES A MAXIMUM OF 2.5 INCHES
6. IDOT TYPE 11 CASTINGS CAN OVERLAP STRUCTURE EDGES A MAXIMUM OF 2.0 INCHES.

VILLAGE OF HINSDALE
STANDARD DETAIL
FOR
CORBELING OF
CURB INLETS

REV:	
DATE:	APRIL 2008
FILE:	STORM\TYPCORB

DETAIL NO. 11

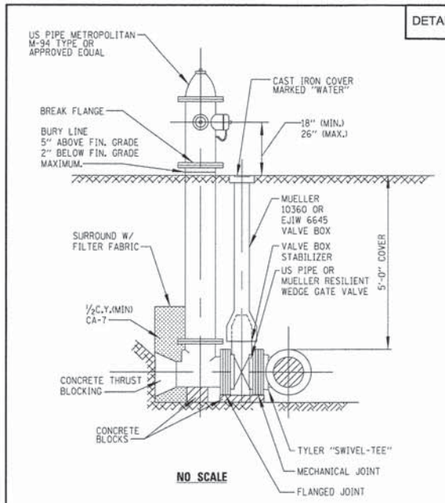

NO SCALE

NOTES:
1. ALL BOLTS BELOW GRADE ON FIRE HYDRANT SHALL BE STAINLESS STEEL.
2. ALL BOLTS ON AUXILIARY VALVE SEAL PLATE AND BONNET SHALL BE STAINLESS STEEL.
3. THRUST BLOCKING SHALL BE CONSTRUCTED SO HYDRANT DRAIN HOLE IS NOT OBSTRUCTED.

VILLAGE OF HINSDALE
STANDARD DETAIL
FOR
FIRE HYDRANT

REV:	
DATE:	APRIL 2008
FILE:	WATER\FRHYDET

DETAIL NO. 13

NOTES:
1. ECCENTRIC CONE REQUIRED
2. USE 4'-0" DIAMETER FOR WATER MAIN SIZES 8" OR LESS, USE 5'-0" DIAMETER FOR WATERMAIN SIZES 10" THRU 20", USE 6'-0" DIAMETER FOR WATERMAIN SIZES GREATER THAN 20"

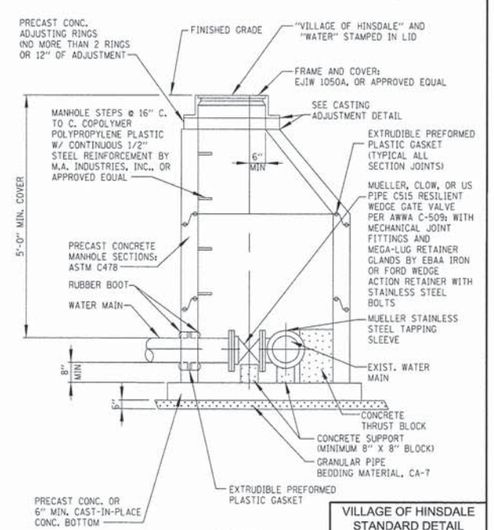

NO SCALE

NOTES:
1. TAPPING OF WATER MAINS SHALL BE DONE ONLY IN THE PRESENCE OF AN AUTHORIZED VILLAGE REPRESENTATIVE.
2. ALL BOLTS AND NUTS SHALL BE STAINLESSS STEEL.

VILLAGE OF HINSDALE
STANDARD DETAIL
FOR
PRESSURE CONNECTION
VALVE VAULT

REV:	1 - S.S. BOLTS REQ'D.
DATE:	AUG. 2011
FILE:	WATER\PCVAVT

DETAIL NO. 14

NOTES:
1. ECCENTRIC CONE REQUIRED
2. USE 4'-0" DIAMETER FOR WATER MAIN SIZES 8" OR LESS, USE 5'-0" DIAMETER FOR WATERMAIN SIZES 10" THRU 20", USE 6'-0" DIAMETER FOR WATERMAIN SIZES GREATER THAN 20"

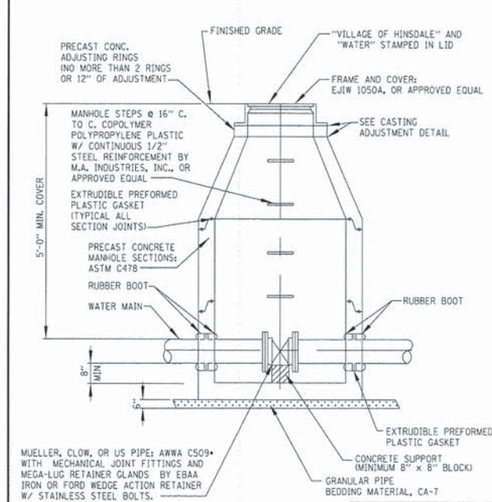

NO SCALE

* VALVES LARGER THAN 16" SHALL BE PRATT BUTTERFLY VALVES PER AWWA C504

VILLAGE OF HINSDALE
STANDARD DETAIL
FOR
STANDARD VALVE

REV:	1 - S.S. BOLTS
DATE:	AUG. 2011
FILE:	WATER\STANVAVT

DETAIL NO. 15

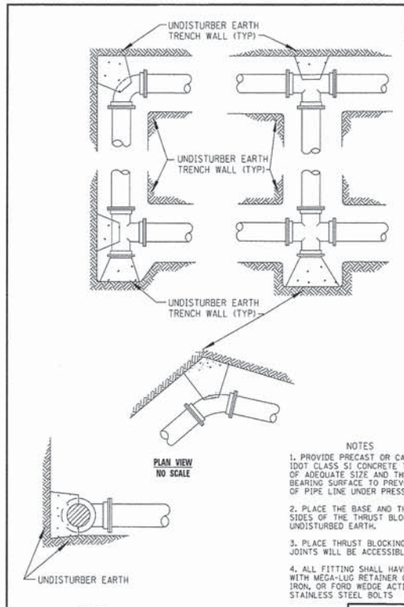

NOTES
1. PROVIDE PRECAST OR CAST-IN-PLACE IDOT CLASS SI CONCRETE THRUST BLOCKS OF ADEQUATE SIZE AND THRUST BEARING SURFACE TO PREVENT MOVEMENT OF PIPE LINE UNDER PRESSURE.
2. PLACE THE BASE AND THRUST BEARING SIDES OF THE THRUST BLOCK DIRECTLY AGAINST UNDISTURBED EARTH.
3. PLACE THRUST BLOCKING SO THE FITTING JOINTS WILL BE ACCESSIBLE FOR REPAIR
4. ALL FITTING SHALL HAVE MECHANICAL JOINTS WITH MEGA-LUG RETAINER GLANDS BY EBAA IRON, OR FORD WEDGE ACTION RETAINER AND STAINLESS STEEL BOLTS

NO SCALE

VILLAGE OF HINSDALE
STANDARD DETAIL
FOR
THRUST BLOCK
INSTALLATIONS

REV:	1 - S.S. BOLTS REQ'D
DATE:	AUG. 2011
FILE:	WATER\THRUSTBK

COMPANY NAME: HR GREEN
PROJECT CONTACT: T. SCOTT CREECH, P.E.
CLIENT: VILLAGE OF HINSDALE
DATE PLOTTED: 12/15/2014 4:49:08 PM
FILE NAME: 032_de112.dgn
PLOT DRIVER: pdf_pvsdt
PEN TABLE: standard-trans-screen-topo.tbl

HRGreen
HRGreen.com
Illinois Professional Design Firm # 184-001322

USER NAME = dstancz	DESIGNED - TSC	REVISED -	
	DRAWN - DS	REVISED -	
PLOT SCALE = N.T.S.	CHECKED - RD	REVISED -	
PLOT DATE = 12/15/2014	DATE -	REVISED -	

STATE OF ILLINOIS
DEPARTMENT OF TRANSPORTATION

MISCELLANEOUS DETAILS

SCALE: N.T.S. | SHEET NO. 13 OF 18 SHEETS | STA. | TO STA.

F.A.U. RTE.	SECTION	COUNTY	TOTAL SHEETS	SHEET NO.
2999	10-00089-00-BR	DUPAGE	157	138
		CONTRACT NO. 61B11		
FED. ROAD DIST. NO.	ILLINOIS	FED. AID PROJECT		

032_de112.dgn

DETAIL NO. 17

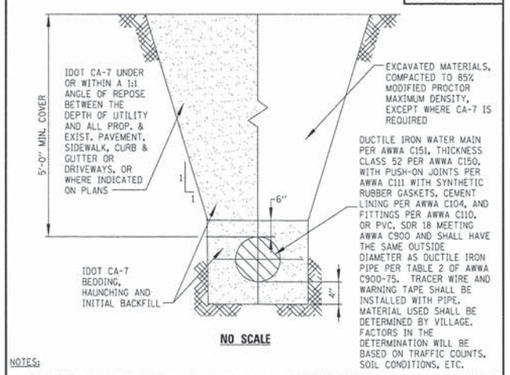

NO SCALE

NOTES:

1. WATER FOR ALL FILLING, TESTING AND CHLORINATING SHALL BE DRAWN FROM THE VILLAGE'S SYSTEM AT THE PROPOSED POINT OF CONNECTION, USING THE VILLAGE'S METERING EQUIPMENT. THIS EQUIPMENT SHALL BE AVAILABLE FROM THE VILLAGE AFTER A 48-HOUR PRIOR NOTICE. EQUIPMENT SHALL BE RETURNED TO THE VILLAGE IMMEDIATELY UPON COMPLETION OF THE TEST, WHETHER SUCCESSFUL OR NOT. CONTRACTOR SHALL BE RESPONSIBLE FOR PROVIDING 2-INCH FLARED CORPORATION ON NEW MAIN TO CONNECT WITH VILLAGE'S EQUIPMENT. FLUSHING SCHEDULE SHALL BE SUBJECT TO VILLAGE WATER DEPARTMENT'S REVIEW AND APPROVAL

2. MAINS SHALL BE PRESSURE TESTED AT A MAXIMUM PRESSURE OF 150 PSI FOR 2 HOUR AND SHALL NOT EXCEED THE ALLOWABLE LEAKAGE WITH AWWA C600 AND AWWA C603. IF MAINS TO BE TESTED INCLUDE CONCRETE THRUST BLOCKING, DO NOT BEGIN TEST UNTIL AT LEAST 5 DAYS AFTER THE INSTALLATION OF THE THRUST BLOCKING.

3. NO CHAINS SHALL BE USED DURING THE INSTALLATION OF THE PROPOSED WATER MAIN. NYLON STRAPS SHALL BE UTILIZED INSTEAD. ANY PIPE THAT IS SCRATCHED DURING INSTALLATION SHALL BE SPRAYED WITH A DIALECTRIC UNDERCOATING PAINT.

4. BRONZE WEDGES SHALL BE INSTALLED AT ALL DUCTILE IRON PIPE JOINTS

5. WATER MAINS SHALL BE FLUSHED AND THEN DISINFECTED BY PER ARTICLE 41-2.14 OF THE STANDARD SPECIFICATIONS FOR WATER & SEWER MAIN CONSTRUCTION IN ILLINOIS. FIFTH EDITION.

6. 16-INCH AND LARGER MAINS SHALL INCLUDE RESTRAINED JOINT PIPE FOR THREE PIPE LENGTHS FROM EACH FITTING

VILLAGE OF HINSDALE STANDARD DETAIL FOR WATER MAIN INSTALLATION

REV:	1 - MATERIAL CHOICE
DATE:	AUG. 2011
FILE:	WATER\WMI

DETAIL NO. 18

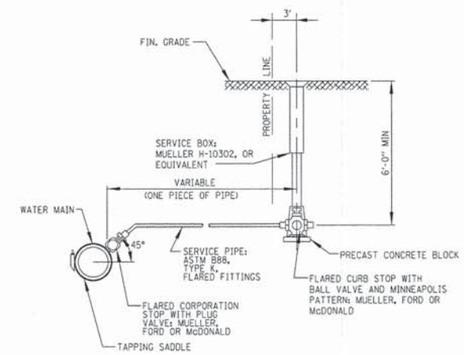

NO SCALE

NOTE:
1. TRENCH BACKFILL SHALL BE INSTALLED PER WATER MAIN INSTALLATION DETAIL.
2. WATER SERVICES SHALL NOT EXCEED 100' IN LENGTH. SPLICES IN THE WATER SERVICE SHALL NOT BE PERMITTED.
3. ALL SERVICES SHALL REQUIRE SADDLES. THE SADDLE SHALL BE STAINLESS, SMITH BLAIR #264 OR JCM #163.

VILLAGE OF HINSDALE STANDARD DETAIL FOR WATER SERVICE

REV:	1 - TAPPING SADDLE
DATE:	AUG. 2011
FILE:	WATER\WSRV

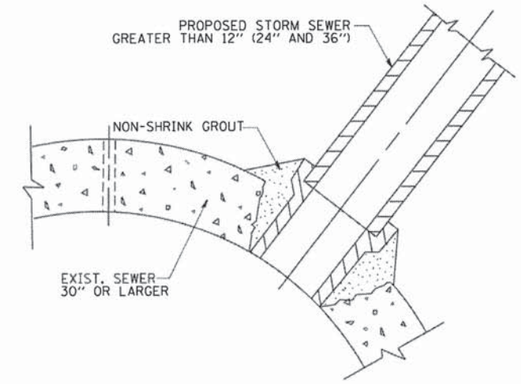

PROPOSED STORM SEWER CONNECTION DETAIL FOR LATERALS GREATER THAN 12"

DETAIL: NTS

DETAIL NO. 24

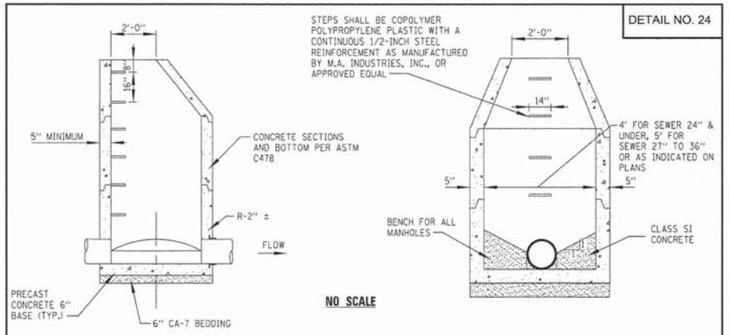

NO SCALE

NOTE:
1. SANITARY MANHOLES SHALL HAVE WATERSTOP GASKETS CAST INTO STRUCTURES AT ALL PIPE PENETRATIONS. (SEE MANHOLE PIPE CONNECTION DETAIL)
2. SANITARY MANHOLES SHALL HAVE CRETEX INTERNAL CHIMNEY SEALS AND PARSONS RAINSTOPPER INSERTS OR EQUAL.
3. SANITARY MANHOLES SHALL HAVE INTEGRAL BASES.
4. MANHOLE BARREL JOINTS SHALL BE TONGUE AND GROOVE TYPE WITH TWO ROWS OF EXTRUDIBLE PREFORMED PLASTIC GASKET MATERIAL (BUTYL ROPE).
5. MACWRAP EXTERNAL JOINT SEALING BANDS IN ACCORDANCE WITH ASTM C-877, OR APPROVED EQUIVALENT, MUST BE PROVIDED AT SANITARY MANHOLE JOINTS.
6. STORM MANHOLES SHALL HAVE A WALL THICKNESS OF 6" FOR 5' DIAMETER STRUCTURES AND 7" FOR 6' DIAMETER STRUCTURES
7. SANITARY MANHOLES SHALL PASS VACUUM-TESTING PER ASTM C-1244.
8. SEE CASTING INSTALLATION AND ADJUSTING DETAIL FOR CASTING REQUIREMENTS.

VILLAGE OF HINSDALE STANDARD DETAIL FOR MANHOLE, TYPE A

REV:	
DATE:	APRIL 2008
FILE:	MISC\MHA

DETAIL NO. 23

NOTES:

1. CASING PIPE SHALL BE NEW PIPE CONFORMING TO ASTM C139 GRADE A WITH CONTINUOUS FIELD-WELDED BUTT JOINTS IN ACCORDANCE WITH AWWA C206, A MINIMUM YIELD STRENGTH OF 35,000 PSI, AND THE FOLLOWING MINIMUM WALL THICKNESS:

NOMINAL PIPE SIZE - INCHES	MINIMUM WALL THICKNESS - INCHES UNDER HIGHWAY	UNDER RAILROAD
UNDER 14	0.188	0.2500
14 AND 16	0.250	0.3125
18	0.250	0.3125
20	0.250	0.3750
24	0.312	0.4375
30	0.312	0.5000
36	0.375	0.5625
42	0.375	0.563
48	0.375	0.625
54	0.500	0.719
60	0.515	0.781
66	0.650	0.875
72	0.650	0.938

2. COAT EXTERIOR SURFACES OF THE CASING PIPE WITH COAL-TAR EPOXY COMPLYING WITH AWWA C210.

3. PROVIDE CARRIER PIPE SUPPORT SYSTEM TO POSITION CARRIER PIPE AT THE INDICATED ELEVATION AND SLOPE WITHIN THE CASING, USING POWERSEAL CASING CHOCK MODEL 4810 STAINLESS STEEL SPACERS CONSISTING OF 4 GAUGE TYPE 304 STAINLESS STEEL SHELLS, PVC LINER, HIGH MOLECULAR WEIGHT POLYMER RUNNERS, AND STAINLESS STEEL BOLTS AND LOCK NUTS, OR APPROVED EQUAL. A MINIMUM OF THREE SPACERS SHALL BE PROVIDED PER CARRIER PIPE LENGTH, ON 6-FOOT CENTERS.

4. FILL ANNULAR SPACE BETWEEN CARRIER AND CASING PIPES FOR ALL PIPES EXCEPT WATER MAINS WITH PEA GRAVEL.

5. CONSTRUCT END SEALS WITH CONCRETE BRICK LAID LENGTHWISE WITH MORTAR OR PREMANUFACTURED RUBBER END SEALS MADE SPECIFICALLY FOR THIS PURPOSE.

6. FILL VOIDS AROUND EXTERIOR OF CASING PIPE WITH MEARL GEOFOAM LIQUID CONCENTRATE LOW DENSITY CELLULAR CONCRETE GROUT HAVING A MINIMUM NET DENSITY OF 45 PCF AND A MINIMUM COMPRESSIVE STRENGTH AT 28 DAYS OF 160 PSI.

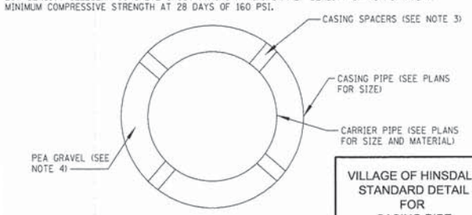

NO SCALE

VILLAGE OF HINSDALE STANDARD DETAIL FOR CASING PIPE

REV:	
DATE:	APRIL 2008
FILE:	MISC\CASPIPE

COMPANY NAME: HR GREEN
PROJECT CONTACT: T. SCOTT CREECH, P.E.
CLIENT: VILLAGE OF HINSDALE
DATE PLOTTED: 12/15/2014 4:50:11 PM
FILE NAME: 032.de113.dgn
PLOT DRIVER: pdf_v.pltt
PEN TABLES: standard-trans-screen-topo.tbl

HRGreen.com
Illinois Professional Design Firm # 184-001322

USER NAME = dstancz	DESIGNED -	TSC	REVISED -		
	DRAWN -	DS	REVISED -		
PLOT SCALE = N.T.S.	CHECKED -	RD	REVISED -		
PLOT DATE = 12/15/2014	DATE -		REVISED -		

STATE OF ILLINOIS
DEPARTMENT OF TRANSPORTATION

MISCELLANEOUS DETAILS

SCALE: N.T.S. | SHEET NO. 14 OF 18 SHEETS | STA. | TO STA.

F.A.U. RTE.	SECTION	COUNTY	TOTAL SHEETS	SHEET NO.
2999	10-00089-00-BR	DUPAGE	157	139
		CONTRACT NO.	61B11	

FED. ROAD DIST. NO. | ILLINOIS | FED. AID PROJECT

032.de113.dgn

DETAIL NO. 26

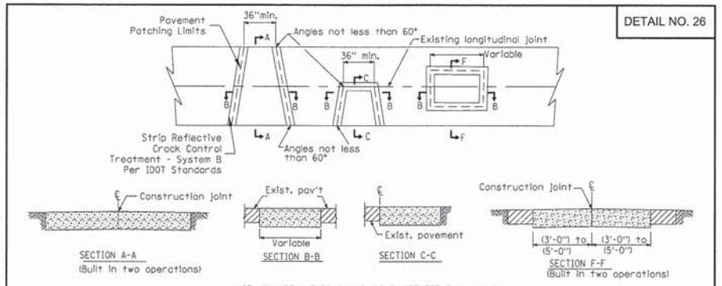

HOT MIX ASPHALT ROADWAYS (TEMP. GREATER THAN 40° F)

GENERAL NOTES:

1. All pavements must be saw cut using a wet saw prior to any excavation.
2. All Street patches must be inspected prior to placement of hot mix asphalt materials.
3. All granular backfill must be compacted through jetting or tamping.
4. Granular material will not be permitted as a temporary surface material. Steel plates, cold mix asphalt, or other materials approved by the Village Engineer shall be utilized.
5. In locations where bituminous patches will be overlayed with bituminous surface course, strip reflective crack control treatment shall be applied to all pavement joints and centered along the respective joints.
6. In locations where the pavement patch will not be overlayed, two (2) inches of bituminous surface course shall be laid in the final lift of the patch.
7. The depth of the bituminous pavement patch shall match the full depth of the existing pavement, but shall not be less than the Village Standard for the respective pavement section.

VILLAGE OF HINSDALE
STANDARD DETAIL
FOR
PAVEMENT PATCHING
SHEET 1

REV:	
DATE:	APRIL 2008
FILE:	TRANS\PAVE-PATCH

DETAIL NO. 26

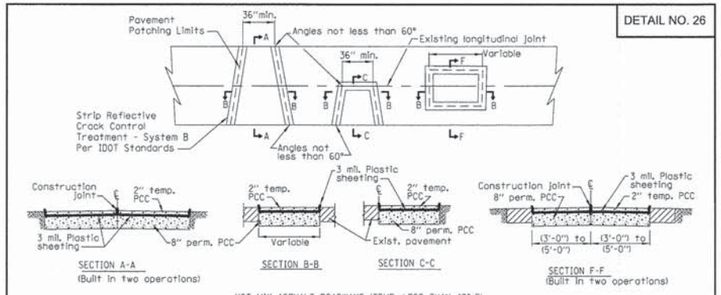

HOT MIX ASPHALT ROADWAYS (TEMP. LESS THAN 40° F)

GENERAL NOTES:

1. All pavements must be saw cut using a wet saw prior to any excavation.
2. All Street patches must be inspected prior to placement of patching materials.
3. All granular backfill must be compacted through jetting or tamping.
4. Granular material will not be permitted as a temporary surface material. Steel plates, cold mix asphalt, or other materials approved by the Village Engineer shall be utilized.
5. Once the 8" permanent PCC has been placed, 2 sheets of 3 mil polyethylene plastic shall be placed over the concrete. The polyethylene sheeting shall be approximately 12" longer than the width and length of the patch.
6. Once the 8" PCC lift has cured, a second 2" temporary PCC lift shall be placed. A steel plate shall be placed over the concrete until cured. When temperatures permit, the 2" temporary PCC lift shall be removed and replaced with hot mix asphalt surface mix.
7. In locations where bituminous patches will be overlayed with bituminous surface course, strip reflective crack control treatment shall be applied to all pavement joints and centered along the respective joints.

VILLAGE OF HINSDALE
STANDARD DETAIL
FOR
PAVEMENT PATCHING
SHEET 2

REV:	
DATE:	APRIL 2008
FILE:	TRANS\PAVE-PATCH

DETAIL NO. 26

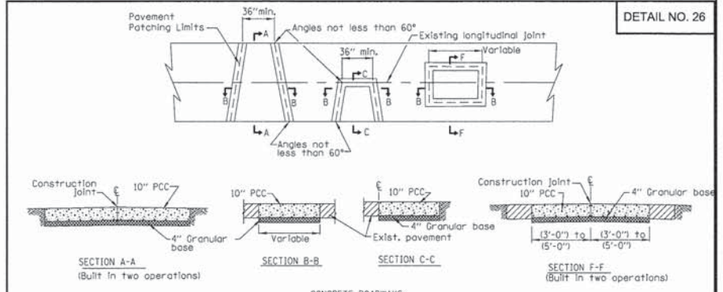

CONCRETE ROADWAYS

GENERAL NOTES:

1. Existing tie bars shall be either cut or removed. Marginal bars shall be cut.
2. Concrete patches shall be poured to a minimum thickness of 10" over a minimum of 4" compacted granular base.
3. A steel plate shall be placed over the patch after the completion of the concrete placement. The steel plate shall be fixed in place and appropriate warning devices shall be erected. In the event of significant pavement slope or when the plate is moving due to traffic, cold patch should be used to ramp the plate to hold it in place.
4. The steel plate shall remain in place for a minimum of 3 calendar days for curing of the concrete. The steel plates shall be removed in a timely manner following the minimum curing period.

VILLAGE OF HINSDALE
STANDARD DETAIL
FOR
PAVEMENT PATCHING
SHEET 3

REV:	
DATE:	APRIL 2008
FILE:	TRANS\PAVE-PATCH

DETAIL NO. 42

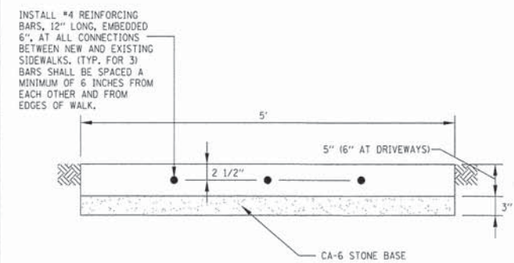

NOTES:

1. SIDEWALKS ADJACENT TO THE BACK OF CURB SHALL BE A MINIMUM OF 6' IN WIDTH.
2. ALL SIDEWALK SHALL BE CONSTRUCTED WITH IDOT CLASS "SI" CONCRETE WITH A MINIMUM COMPRESSIVE STRENGTH OF 3,500 PSI AT 14 DAYS
3. PREFORMED EXPANSION JOINTS (3/4" THICK) SHALL BE CONSTRUCTED IN SIDEWALK EVERY 100 FEET AND AT ALL ABUTTING DRIVEWAYS AND CURB AND GUTTER.
4. TOOLED CONTRACTION JOINTS SHALL BE CONSTRUCTED IN SIDEWALK EVERY FIVE FEET.
5. SIDEWALK SHALL HAVE 1/4" PER FOOT CROSS-SLOPE.
6. SIDEWALKS SHALL BE TESTED PER VILLAGE CODE 11-6-6(B).

VILLAGE OF HINSDALE
STANDARD DETAIL
FOR
SIDEWALK

REV:	
DATE:	APRIL 2008
FILE:	MISC\SIDEWALK

TREE TRUNK PROTECTION DETAIL

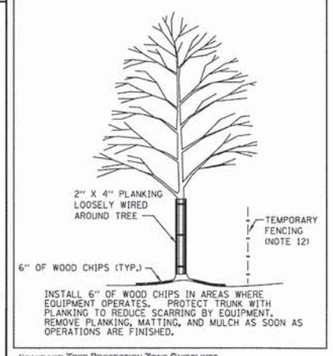

STANDARD TREE PROTECTION ZONE GUIDELINES

1. Trees within the public right-of-way may not be removed for any reason and are to be protected from injury or damage during construction. This tree is a significant tree in the Village of Hinsdale. Pruning shall only be done by forestry staff to provide clearance for construction activities. Questions regarding street trees may be directed to the Village Forester at (630) 789 - 7043.
2. The typical TPZ should encompass the canopy of the tree. However, since these conditions are unique, the application should be evaluated with the final limits of the TPZ being established by the Village Forester.
3. Mulch the entire area of the TPZ in an effort to improve the growing environment for the roots. During construction phase maintain a four to six inch layer of chip mulch over the soil surface to reduce soil compaction, improve aeration, enhance moisture retention and reduce temperature extremes. Mulch generally consists of shredded leaves or bark, pine straw, peat moss, wood chips or composted green waste.
4. Fence the public portion of the TPZ with a six foot (6') high chain link or wood slat fence to prevent wounds to the tree and soil compaction within the root zone. Post the fence with a sign stating: "*TREE PROTECTION ZONE – KEEP OUT*".
5. Should it be necessary to trench within the TPZ all trenches shall be hand dug. No roots larger than two inches (2") shall be cut unless no other alternative is feasible. All smaller roots that require cutting shall be cut with pruning saws. Cuts shall be made flush with the side of the trench. If at any time twenty-five percent (25%) of the area within the TPZ is being separated from the tree by a trench, then the line shall be either relocated or installed by boring.
6. Removal of hardscape and/or excavation within the TPZ shall be done manually.
7. The minimum distance between an open trench and any tree shall be between six inches (6") to one foot (1') for every inch of trunk diameter measured at four and a half feet (4 ½') above existing grade, depending on the species of tree. Minimum clearance shall be ten feet (10') from the trunk of the tree.
8. In the event root pruning is required to accommodate grade changes or the installation of hardscape features the root pruning procedures shall be directed by forestry staff.
9. At no time shall any equipment, materials, supplies or fill soil be allowed in the TPZ unless necessary.
10. Prune and fertilize the trees after the completion of all exterior work on the building and at the beginning of the landscape phase.
11. Prior to the commencement of your project contact the Village Forester at (630) 789-7043 to determine the precise requirements of the TPZ.
12. TPZ fencing may be snow fencing in a neutral color (NOT orange).

WATER AND SEWER SEPARATION REQUIREMENTS DETAIL

PROPOSED WATER MAIN BELOW EXISTING SEWER LINE WITH 18 MINIMUM SEPARATION.

NOTES:

1. OMIT SELECT GRANULAR CRADLE AND GRANULAR BACKFILL TO ONE (1) FOOT OVER TOP OF PIPE AND USE SELECT EXCAVATED MATERIAL (CLASS IV) AND COMPACT FOR 10 FEET ON EITHER SIDE OF SEWER LINE.
2. IF SELECT GRANULAR BACKFILL EXISTS, REMOVE WITHIN WIDTH OF EXISTING SEWER LINE TRENCH AND REPLACE WITH SELECT EXCAVATED MATERIAL (CLASS IV) AND COMPACT.
3. PROVIDE ADEQUATE SUPPORT FOR EXISTING SEWER LINE TO PREVENT DAMAGE DUE TO SETTLEMENT.
4. CLASS IV MATERIAL SHALL BE COMPACTED TO 95% STANDARD PROCTOR MAXIMUM DENSITY.

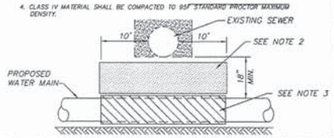

PROPOSED WATER MAIN BELOW EXISTING SEWER LINE WITH LESS THAN 18" MINIMUM SEPARATION.

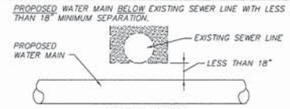

NOT ALLOWED

MUST MAINTAIN 18" VERTICAL SEPARATION

PROPOSED SEWER LINE BELOW EXISTING WATER MAIN WITH 18" MINIMUM SEPARATION.

NOTES:

1. PROVIDE ADEQUATE SUPPORT FOR EXISTING WATER MAIN TO PREVENT DAMAGE DUE TO SETTLEMENT OF SEWER TRENCH.
2. MAINTAIN 18" MINIMUM VERTICAL SEPARATION FOR 10 FEET HORIZONTALLY.

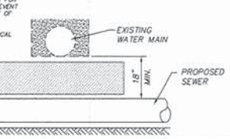

PROPOSED SEWER LINE BELOW EXISTING WATER MAIN WITH LESS THAN 18" SEPARATION.

NOTES:

1. OMIT SELECT GRANULAR CRADLE AND GRANULAR BACKFILL TO ONE (1) FOOT OVER TOP OF PIPE AND USE SELECT EXCAVATED MATERIAL (CLASS IV) AND COMPACT FOR 10 FEET ON EITHER SIDE OF WATER MAIN.
2a. CONSTRUCT 10 FEET OF PROPOSED SEWER WITH WATERMAIN QUALITY PIPE AND PRESSURE TEST, OR;
2b. USE 10 FEET OF CASING FOR PROPOSED SEWER AND SEAL ENDS OF CASING.
3. POINT LOADS SHALL NOT BE ALLOWED BETWEEN SEWER OR SEWER CASING AND WATER MAIN.
4. PROVIDE ADEQUATE SUPPORT FOR EXISTING WATER MAIN TO PREVENT DAMAGE DUE TO SETTLEMENT OF SEWER TRENCH.
5. CLASS IV MATERIAL TO BE COMPACTED TO 95% STANDARD PROCTOR MAXIMUM DENSITY.

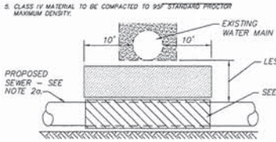

▲ TAKEN FROM THE STANDARD SPECIFICATIONS FOR WATER AND SEWER MAIN CONSTRUCTION IN ILLINOIS – SEE PAGES 156 – 159

U-4

WATER AND SEWER SEPARATION REQUIREMENTS DETAIL

EXISTING WATERMAIN BELOW PROPOSED SEWER LINE WITH 18" MINIMUM SEPARATION.

NOTE: CLASS IV MATERIAL TO BE COMPACTED TO 95% STANDARD PROCTOR MAXIMUM DENSITY.

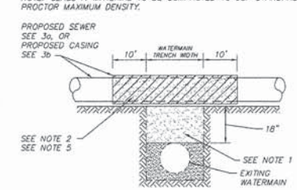

NOTES:

1. IF SELECT GRANULAR BACKFILL EXISTS; REMOVE WITHIN WIDTH OF PROPOSED SEWER TRENCH AND REPLACE WITH SELECT EXCAVATED MATERIAL (CLASS IV) AND COMPACT.
2. OMIT SELECT GRANULAR CRADLE AND GRANULAR BACKFILL TO ONE (1) FOOT OVER TOP OF PIPE AND USE SELECT EXCAVATED MATERIAL (CLASS IV) AND COMPACT FOR 10 FEET ON EITHER SIDE OF WATER MAIN.
3. a. CONSTRUCT 10 FEET OF PROPOSED SEWER WITH WATERMAIN QUALITY PIPE AND PRESSURE TEST, OR;
   b. USE 10 FEET OF CASING FOR PROPOSED SEWER AND SEAL ENDS OF CASING.
4. POINT LOADS SHALL NOT BE ALLOWED BETWEEN SEWER OR SEWER CASING AND WATER MAIN.
5. PROVIDE ADEQUATE SUPPORT FOR EXISTING WATERMAIN TO PREVENT DAMAGE DUE TO SETTLEMENT OF SEWER TRENCH.

PROPOSED WATERMAIN ABOVE EXISTING SEWER LINE WITH 18" MINIMUM SEPARATION.

NOTE: CLASS IV MATERIAL SHALL BE COMPACTED TO 95% STANDARD PROCTOR MAXIMUM DENSITY.

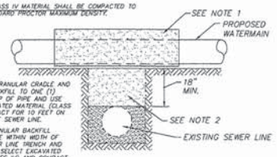

NOTES:

1. OMIT SELECT GRANULAR CRADLE AND GRANULAR BACKFILL TO ONE (1) FOOT OVER TOP OF PIPE AND USE SELECT EXCAVATED MATERIAL (CLASS IV) AND COMPACT FOR 10 FEET ON EITHER SIDE OF SEWER LINE.
2. IF SELECT GRANULAR BACKFILL EXISTS, REMOVE WITHIN WIDTH OF EXISTING SEWER LINE TRENCH AND REPLACE WITH SELECT EXCAVATED MATERIAL (CLASS IV) AND COMPACT.

PROPOSED WATER MAIN ABOVE EXISTING SEWER LINE WITH LESS THAN 18" SEPARATION.

NOTE: CLASS IV MATERIAL SHALL BE COMPACTED TO 95% STANDARD PROCTOR MAXIMUM DENSITY.

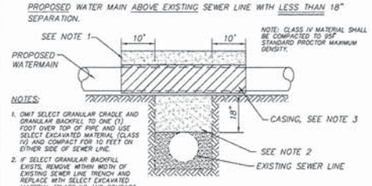

NOTES:

1. OMIT SELECT GRANULAR CRADLE AND GRANULAR BACKFILL TO ONE (1) FOOT OVER TOP OF PIPE AND USE SELECT EXCAVATED MATERIAL (CLASS IV) AND COMPACT FOR 10 FEET ON EITHER SIDE OF SEWER LINE.
2. IF SELECT GRANULAR BACKFILL EXISTS, REMOVE WITHIN WIDTH OF EXISTING SEWER LINE TRENCH AND REPLACE WITH SELECT EXCAVATED MATERIAL (CLASS IV) AND COMPACT.
3. USE A CASING FOR PROPOSED WATER MAIN AND SEAL ENDS OF CASING.
4. POINT LOADS SHALL NOT BE ALLOWED BETWEEN WATER MAIN OR WATERMAIN AND SEWER.

▲ TAKEN FROM THE STANDARD SPECIFICATIONS FOR WATER AND SEWER MAIN CONSTRUCTION IN ILLINOIS – SEE PAGES 156–159.

U-5

WATER MAIN LOWERING DETAIL

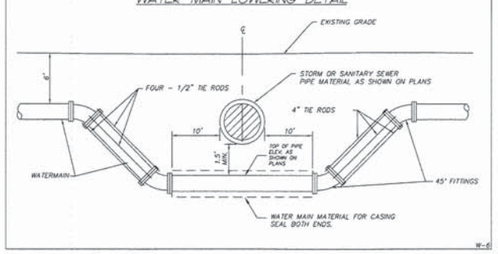

W-6

COMPANY NAME: HR GREEN
PROJECT CONTACT: T. SCOTT CREECH, P.E.
CLIENT: VILLAGE OF HINSDALE
DATE PLOTTED: 12/11/2014 2:22:22 PM
FILE NAME: 032.de114.dgn
PLOT DRIVER: pdf.pltt
PEN TABLE: standard-trans-screen-topo.tbl

HRGreen.com
Illinois Professional Design Firm
184-001322

USER NAME = dstancz	DESIGNED - TSC	REVISED -	
	DRAWN - DS	REVISED -	
PLOT SCALE = N.T.S.	CHECKED - RD	REVISED -	
PLOT DATE = 12/11/2014	DATE -	REVISED -	

STATE OF ILLINOIS
DEPARTMENT OF TRANSPORTATION

MISCELLANEOUS DETAILS

SCALE: N.T.S. | SHEET NO. 15 OF 18 SHEETS | STA. | TO STA.

F.A.U. RTE.	SECTION	COUNTY	TOTAL SHEETS	SHEET NO.
2999	10-00089-00-BR	DUPAGE	157	140
		CONTRACT NO. 61B11		

FED. ROAD DIST. NO. | ILLINOIS | FED. AID PROJECT

032.de114.dgn

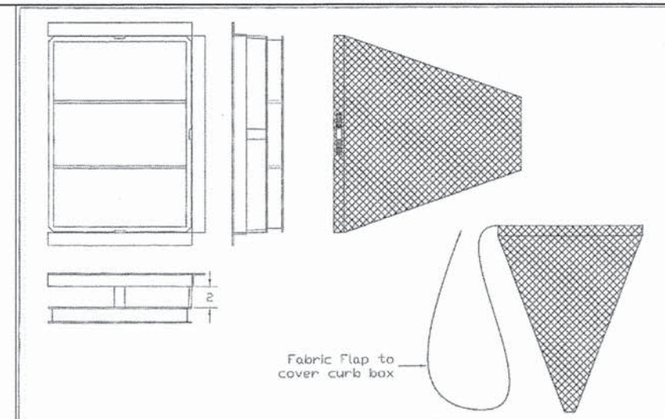

GENERAL NOTES:
FRAME: Top flange fabricated from 1¼"x1¼"x¼" angle. Base rim fabricated from 1½"x½"x¼" channel. Handles and suspension brackets fabricated from 1¼"x¼" flat stock. All steel conforming to ASTM-A36.
SEDIMENT BAG: Bag fabricated from 4 oz./sq.yd. non-woven polypropylene geotextile reinforced with polyester mesh. Bag secured to base rim with a stainless steel band and lock.

DATE	REVISIONS
01-11-02	Original
05-07-04	Remove Back Rail

Typical Curb Box

INLET PROTECTION DETAIL

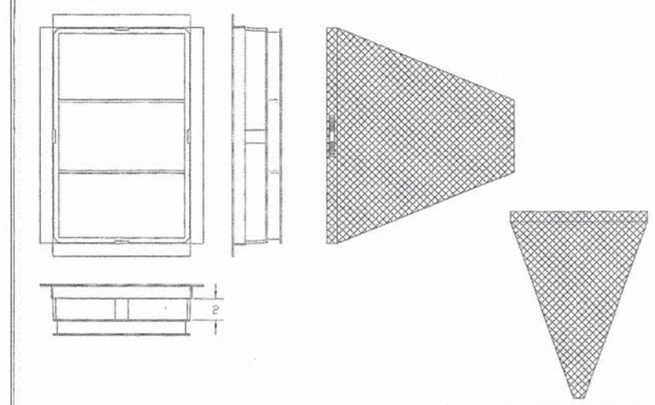

GENERAL NOTES:
FRAME: Top flange fabricated from 1¼"x1¼"x¼" angle. Base rim fabricated from 1½"x½"x¼" channel. Handles and suspension brackets fabricated from 1¼"x¼" flat stock. All steel conforming to ASTM-A36.
SEDIMENT BAG: Bag fabricated from 4 oz./sq.yd. non-woven polypropylene geotextile reinforced with polyester mesh. Bag secured to base rim with a stainless steel band and lock.

DATE	REVISIONS
01-22-02	Original

Typical Rectangular

INLET PROTECTION DETAIL

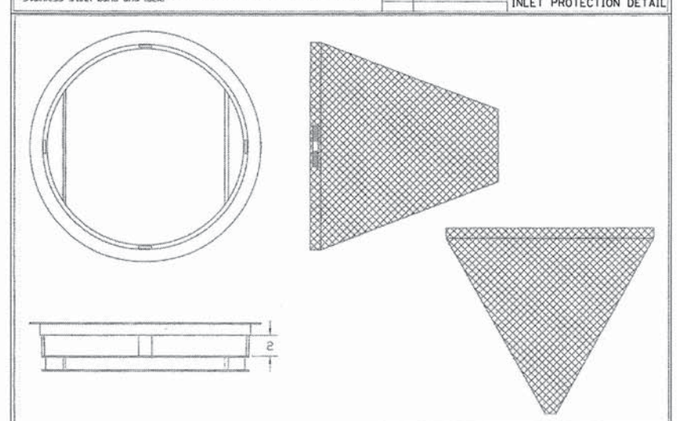

GENERAL NOTES:
FRAME: Top flange fabricated from 1¼"x1¼"x¼" angle. Base rim fabricated from 1½"x½"x¼" channel. Handles and suspension brackets fabricated from 1¼"x¼" flat stock. All steel conforming to ASTM-A36.
SEDIMENT BAG: Bag fabricated from 4 oz./sq.yd. non-woven polypropylene geotextile reinforced with polyester mesh. Bag secured to base rim with a stainless steel band and lock.

DATE	REVISIONS
01-11-02	Original

Typical Round

INLET PROTECTION DETAIL

COMPANY NAME: HR GREEN
PROJECT CONTACT: T. SCOTT GREEN, P.E.
CLIENT: VILLAGE OF HINSDALE
DATE PLOTTED: 12/11/2014 2:22:28 PM
FILE NAME: 032_de115.dgn
PLOT DRIVER: pdf_24.pdf
PEN TABLE: standard-trans-screen-tags.tbl

HRGreen.com
Illinois Professional Design Firm
184-001322

USER NAME = dstencz	DESIGNED - TSC	REVISED -	
	DRAWN - DS	REVISED -	
PLOT SCALE = N.T.S.	CHECKED - RD	REVISED -	
PLOT DATE = 12/11/2014	DATE -	REVISED -	

STATE OF ILLINOIS
DEPARTMENT OF TRANSPORTATION

MISCELLANEOUS DETAILS

SCALE: N.T.S. | SHEET NO. 16 OF 18 SHEETS | STA. | TO STA.

F.A.U. RTE.	SECTION	COUNTY	TOTAL SHEETS	SHEET NO.
2999	10-00089-00-BR	DUPAGE	157	141
		CONTRACT NO.		61B11

FED. ROAD DIST. NO. | ILLINOIS | FED. AID PROJECT

032_de115.dgn

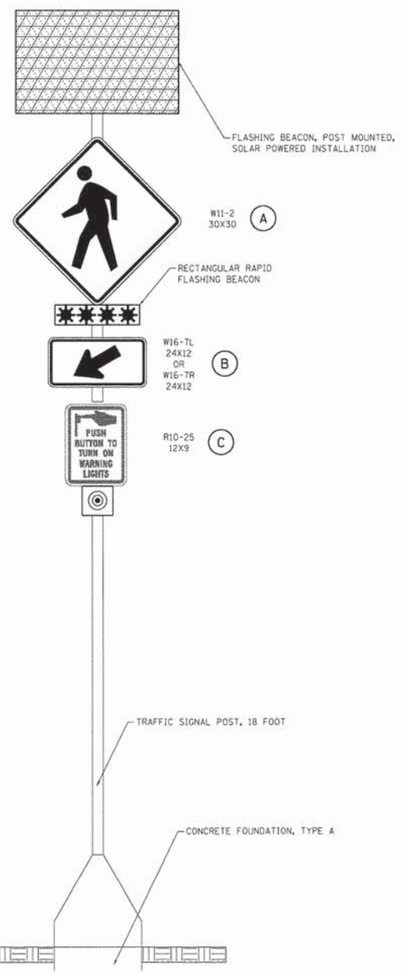

PEDESTRIAN ACTIVATED CROSSWALK WARNING SYSTEM

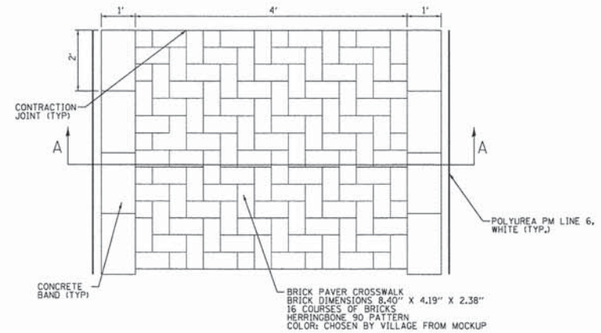

BRICK PAVER CROSSWALKS

N.T.S.

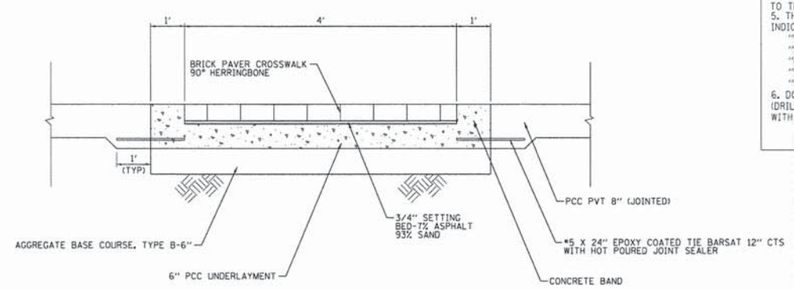

SECTION A-A

DETAIL NO. 28

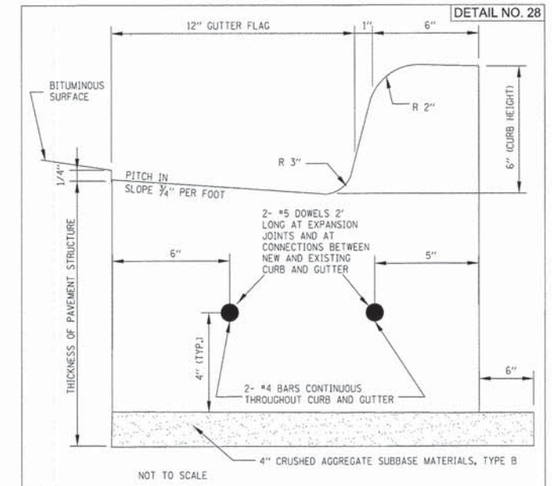

NOT TO SCALE

NOTES:

1. ALL CURB AND GUTTER SHALL BE CONSTRUCTED WITH IDOT CLASS SI CONCRETE WITH A MINIMUM COMPRESSIVE STRENGTH OF 3500 PSI AT 14 DAYS. PROVIDE AND TEST 3 CYLINDERS FOR EACH DAY'S POUR, OR 50 CUBIC YARDS, WHICHEVER IS LESS.
2. CONTRACTION JOINTS SHALL BE SAW-CUT AT MAXIMUM 20' INTERVALS AND CAULKED.
3. PREFORMED EXPANSION JOINTS,3/4" THICK, SHALL BE PLACED FIVE FEET EITHER SIDE OF STORM STRUCTURES IN CURB AND GUTTER, AT CURB RETURNS AND AT POINTS OF CURVATURE, AT ALL CONNECTIONS BETWEEN NEW AND EXISTING CURB AND GUTTER, AND AT 200' INTERVALS ON TANGENTS.
4. CURB AND GUTTER AT STORM STRUCTURES SHALL BE BOXED-OUT A MINIMUM OF 5' ON EACH SIDE OF STRUCTURE AND HAND-FORMED BETWEEN EXPANSION JOINTS. FORMS SHALL BE PLACED AND INSPECTED BY VILLAGE PRIOR TO POURING CONCRETE. STRUCTURE FRAMES SHALL BE PLACED AND ADJUSTED PRIOR TO THIS INSPECTION.
5. THE FOLLOWING SHALL BE STAMPED IN THE CURB AT THE INDICATED LOCATIONS:
   "W" FOR WATER SERVICES
   "S" FOR SANITARY SEWER SERVICES
   "CO" FOR STORM SEWER SERVICE LINE CLEAN-OUTS
   "WV" FOR WATER VALVE VAULTS
   "SM" FOR SANITARY MANHOLES
6. DOWELS AT EXPANSION JOINTS SHALL BE CENTERED ON THE JOINT (DRILLED INTO EXISTING CURB AND GUTTER), AND SHALL BE INSTALLED WITH GREASE CAPS ON ONE SIDE.

VILLAGE OF HINSDALE
STANDARD DETAIL
FOR BARRIER
COMBINATION CONCRETE
CURB AND GUTTER
TYPE B-6.12

REV:	
DATE:	APRIL 2008
FILE:	RANS\C-GB612

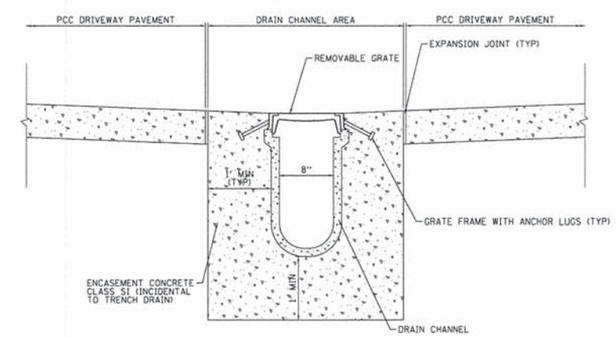

TRENCH DRAIN DETAIL

N.T.S.

NOTES:

1. OUTLET PIPES AND PREFORMED CHANNEL INVERTS SHALL BE SLOPED AT 0.6% OR STEEPER TOWARD OUTLET REGARDLESS OF THE SURFACE SLOPE.
2. TRENCH DRAIN MAY BE STUBBED DIRECTLY INTO DRAINAGE STRUCTURES OR OUTLET PIPES MAY BE USED TO CONNECT TRENCH DRAIN TO DRAINAGE STRUCTURES.
3. TRENCH EXCAVATION MUST ALLOW FOR A MINIMUM OF 12 INCHES OF CONCRETE TO BE PLACED UNDER AND ALONGSIDE THE TRENCH DRAIN CHANNEL SYSTEM.
4. THE FINISHED LEVEL OF CONCRETE MUST BE APPROXIMATELY 1/8" ABOVE THE TOP OF THE DRAIN CHANNEL.
5. TRENCH DRAINS SHALL BE IN ACCORDANCE WITH THE MANUFACTURERS DETAILS AND SPECIFICATIONS.
6. PROVIDE 1" EXPANSION JOINT WITH PREFORMED JOINT FILLER BETWEEN PCC DRIVEWAY PAVEMENT AND TRENCH DRAIN ENCASEMENT.

COMPANY NAME: HR GREEN
PROJECT CONTACT: T. SCOTT CREECH, P.E.
CLIENT: VILLAGE OF HINSDALE
DATE PLOTTED: 12/15/2014 4:00:00 PM
FILE NAME: 032_de16.dgn
PLOT DRIVER: pdf_pv.pltr
PEN TABLE: standard-trans-screen-100a.tbl

032_de16.dgn

HRGreen.com
Illinois Professional Design Firm
184-001322

USER NAME = dstanez	DESIGNED - TSC	REVISED -	
	DRAWN - DS	REVISED -	
PLOT SCALE = N.T.S.	CHECKED - RD	REVISED -	
PLOT DATE = 12/15/2014	DATE -	REVISED -	

STATE OF ILLINOIS
DEPARTMENT OF TRANSPORTATION

MISCELLANEOUS DETAILS

SCALE: N.T.S. | SHEET NO. 17 OF 18 SHEETS | STA. | TO STA.

F.A.U. RTE.	SECTION	COUNTY	TOTAL SHEETS	SHEET NO.
2999	10-00089-00-BR	DUPAGE	157	142
		CONTRACT NO.	61B11	

FED. ROAD DIST. NO. | ILLINOIS | FED. AID PROJECT

Handrail Details

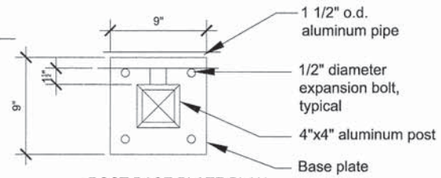

POST BASE PLATE PLAN

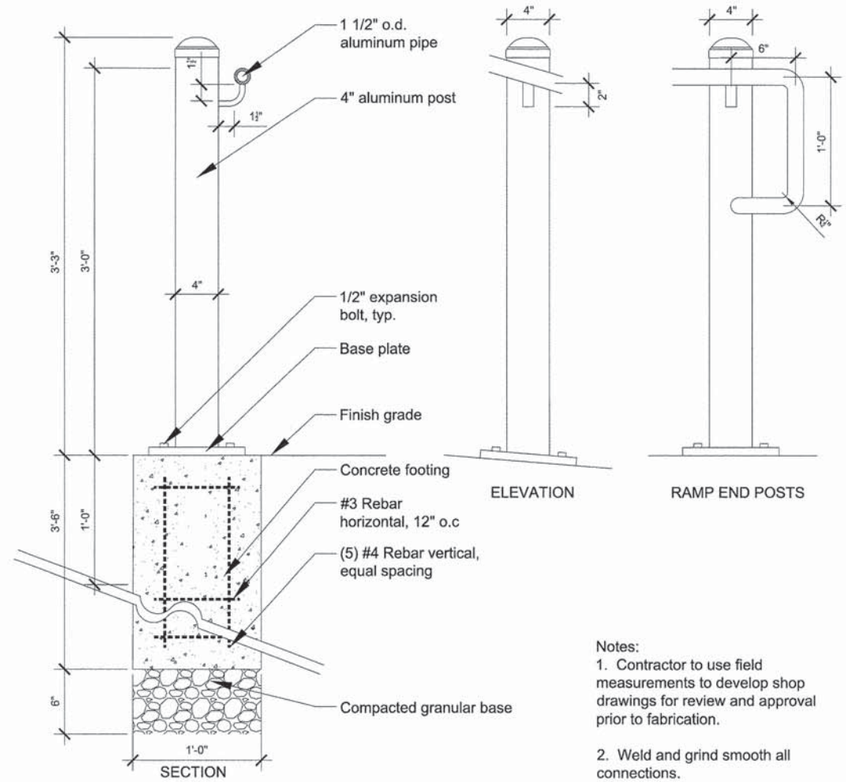

SECTION

ELEVATION

RAMP END POSTS

Notes:
1. Contractor to use field measurements to develop shop drawings for review and approval prior to fabrication.

2. Weld and grind smooth all connections.

1 Pedestrian Railing

SCALE: NTS

d-handrail-dtl

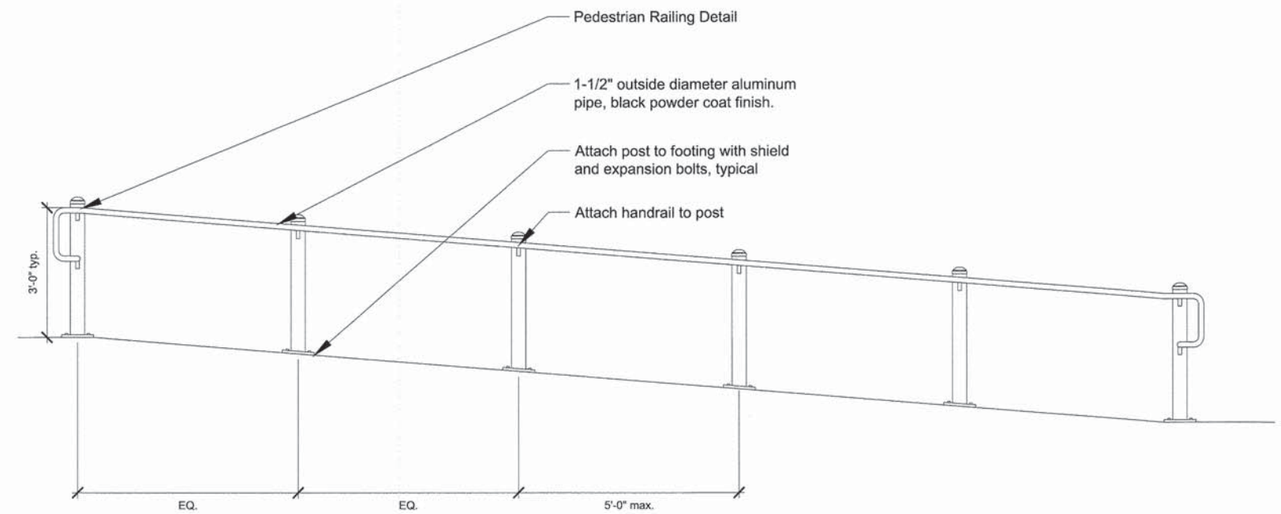

2 Pedestrian Railing - Elevation

SCALE: NTS

d-handrail-elev

COMPANY NAME: HR GREEN
PROJECT CONTACT: T. SCOTT CREECH, P.E.
CLIENT: VILLAGE OF HINSDALE
DATE PLOTTED: 12/11/2014 2:22:48 PM
FILE NAME: 032.de17.dgn
PLOT NUMBER: pdf_v4.pl
PEN TABLE: standard-trans-screen-topo.tbl

032.de17.dgn

HRGreen.com Illinois Professional Design Firm # 184-001322	USER NAME = dstanoz	DESIGNED - TSC	REVISED -	STATE OF ILLINOIS DEPARTMENT OF TRANSPORTATION	MISCELLANEOUS DETAILS			F.A.U. RTE.	SECTION	COUNTY	TOTAL SHEETS / SHEET NO.
		DRAWN - DS	REVISED -					2999	10-00089-00-BR	DUPAGE	157 / 143
	PLOT SCALE = N.T.S.	CHECKED - RD	REVISED -							CONTRACT NO. 61B11	
	PLOT DATE = 12/11/2014	DATE -	REVISED -		SCALE: N.T.S.	SHEET NO. 18 OF 18 SHEETS	STA. TO STA.	FED. ROAD DIST. NO.	ILLINOIS	FED. AID PROJECT	

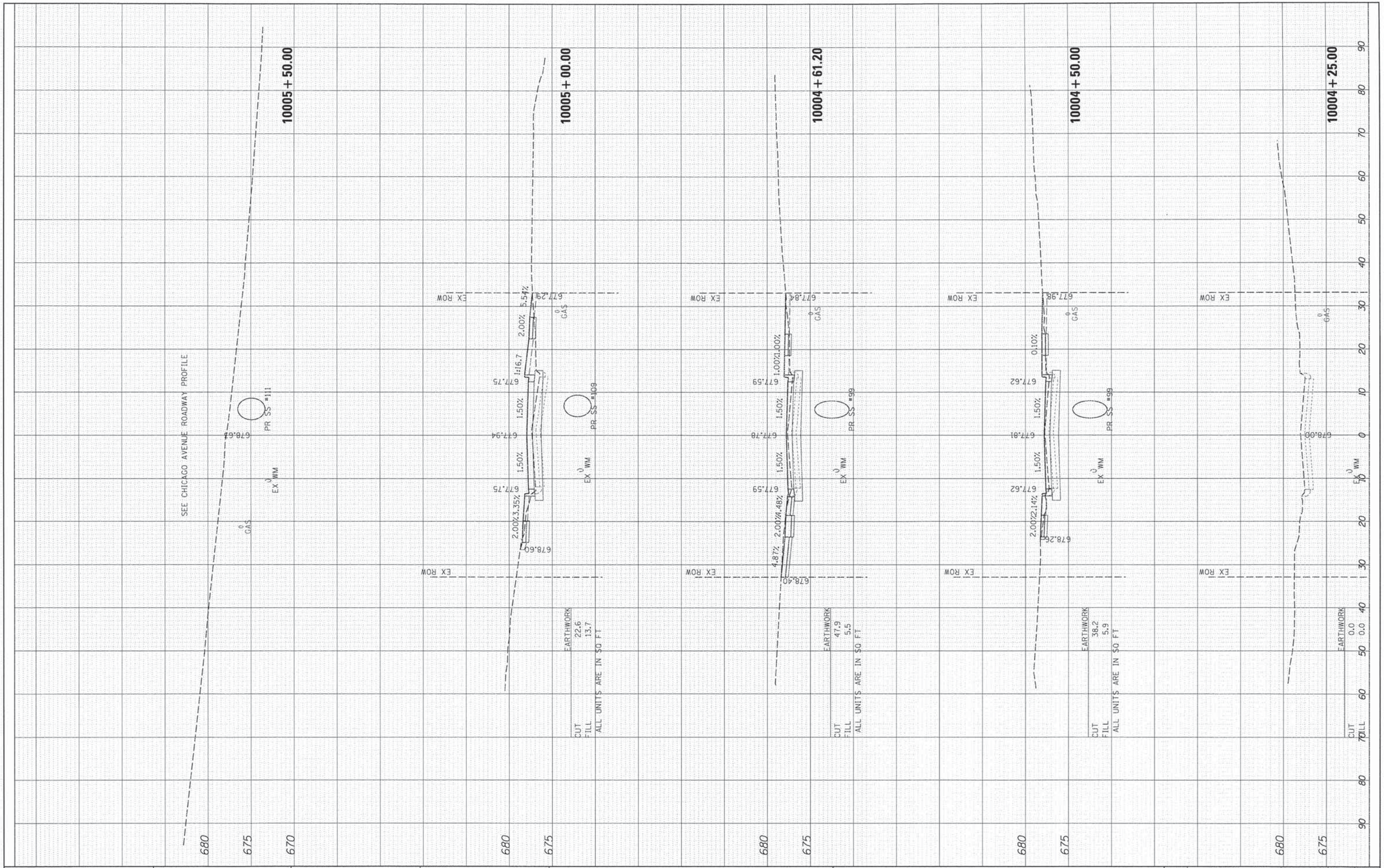

FINAL SURVEY	BY	DATE
SURVEYED		
PLOTTED		
TEMPLATE		
AREAS		
AREAS CHECKED		
NOTE BOOK NO.		

ORIGINAL SURVEY	BY	DATE
SURVEYED		
PLOTTED		
TEMPLATE		
AREAS		
AREAS CHECKED		
NOTE BOOK NO.		

USER NAME = dstancz	DESIGNED - TSC	REVISED -
FILE NAME = 032_XSC_Oak_sheet.dgn	DRAWN - DS	REVISED -
PLOT SCALE = 1"=10'	CHECKED - RD	REVISED -
PLOT DATE = 12/16/2014	DATE - 12/16/14	REVISED -

STATE OF ILLINOIS
DEPARTMENT OF TRANSPORTATION

PROPOSED CROSS SECTIONS
OAK STREET

SCALE: 1"=10' | SHEET 1 OF 6 SHEETS | STA. 10004+25 TO STA. 10005+50

F.A.U. RTE.	SECTION	COUNTY	TOTAL SHEETS	SHEET NO.
2999	10-00089-00-BR	DUPAGE	157	144
		CONTRACT NO.		
		ILLINOIS FED. AID PROJECT		

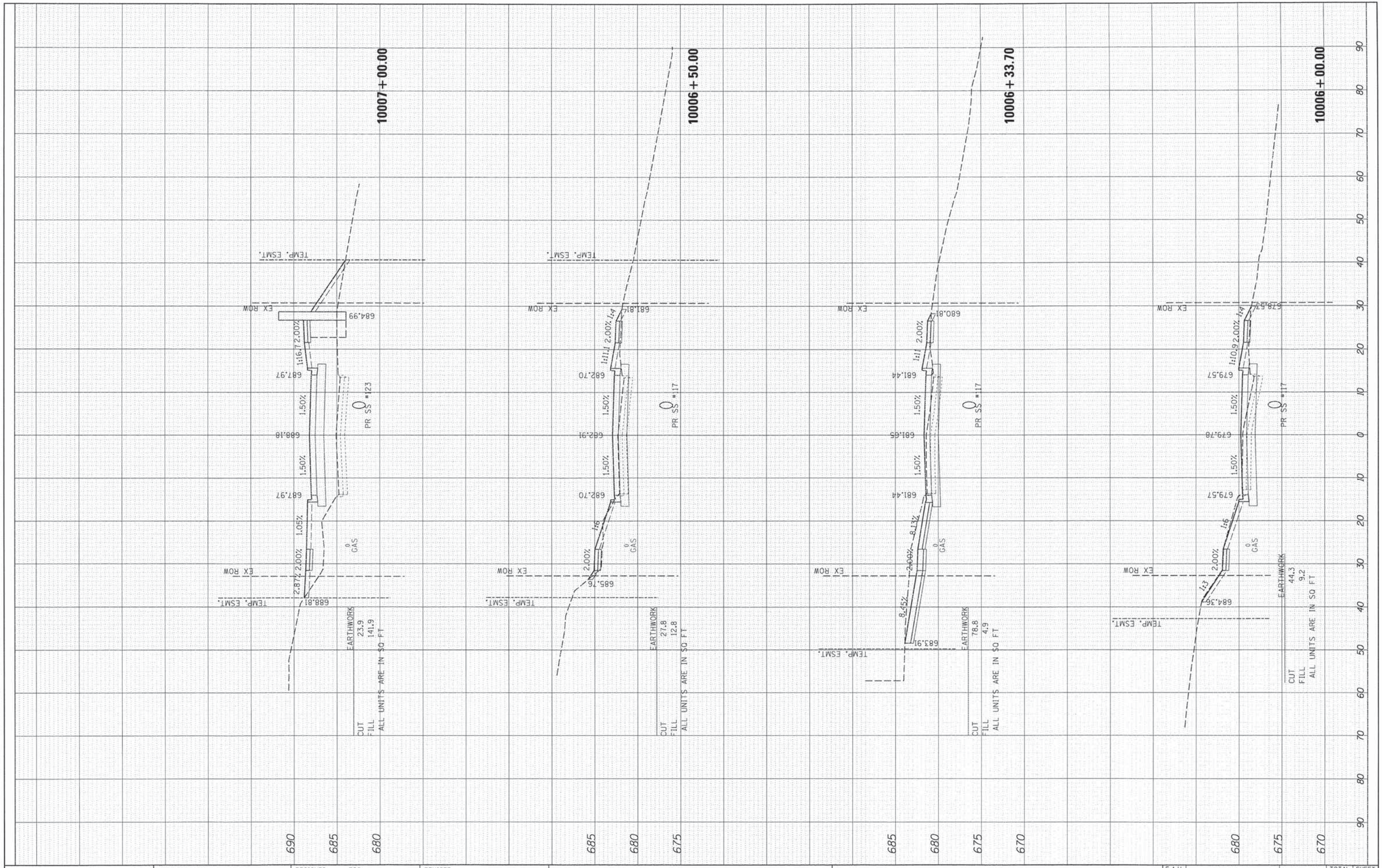

USER NAME = dstancz	DESIGNED - TSC	REVISED -
FILE NAME = 032.XSC_Oak_sheet.dgn	DRAWN - DS	REVISED -
PLOT SCALE = 1"=10'	CHECKED - RD	REVISED -
PLOT DATE = 12/16/2014	DATE - 12/16/14	REVISED -

STATE OF ILLINOIS
DEPARTMENT OF TRANSPORTATION

PROPOSED CROSS SECTIONS
OAK STREET

SCALE: 1"=10' | SHEET 2 OF 6 SHEETS | STA. 10006+00 TO STA.10007+00

F.A.U. RTE.	SECTION	COUNTY	TOTAL SHEETS	SHEET NO.
2999	10-00089-00-BR	DUPAGE	157	145

CONTRACT NO.

ILLINOIS FED. AID PROJECT

FINAL SURVEY	BY	DATE
SURVEYED		
PLOTTED		
TEMPLATE		
AREAS		
AREAS CHECKED		
NOTE BOOK NO.		

ORIGINAL SURVEY	BY	DATE
SURVEYED		
PLOTTED		
TEMPLATE		
AREAS		
AREAS CHECKED		
NOTE BOOK NO.		

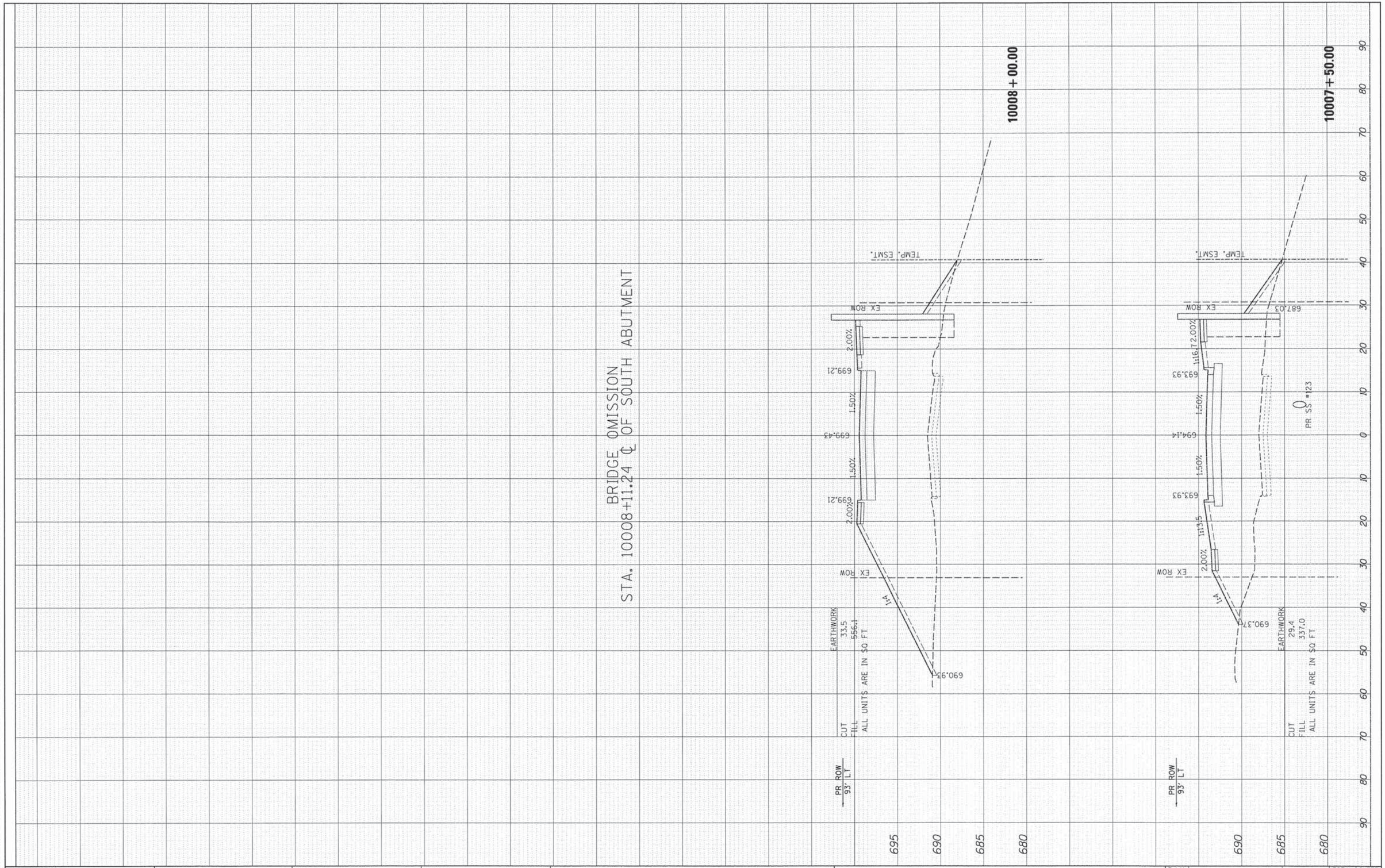

FINAL SURVEY	SURVEYED	BY	DATE
NOTE BOOK	PLOTTED		
NO.	TEMPLATE		
	AREAS		
	AREAS CHECKED		

ORIGINAL SURVEY	SURVEYED	BY	DATE
NOTE BOOK	PLOTTED		
NO.	TEMPLATE		
	AREAS		
	AREAS CHECKED		

USER NAME = dstanaz	DESIGNED - TSC	REVISED -
FILE NAME = 032_XSC_Oak_sheet.dgn	DRAWN - DS	REVISED -
PLOT SCALE = 1"=10'	CHECKED - RD	REVISED -
PLOT DATE = 12/16/2014	DATE - 12/16/14	REVISED -

STATE OF ILLINOIS
DEPARTMENT OF TRANSPORTATION

PROPOSED CROSS SECTIONS
OAK STREET

SCALE: 1"=10' | SHEET 3 OF 6 SHEETS | STA. 10007+50 TO STA. 10008+00

F.A.U. RTE.	SECTION	COUNTY	TOTAL SHEETS	SHEET NO.
2999	10-00089-00-BR	DUPAGE	157	146
		CONTRACT NO.		
	ILLINOIS FED. AID PROJECT			

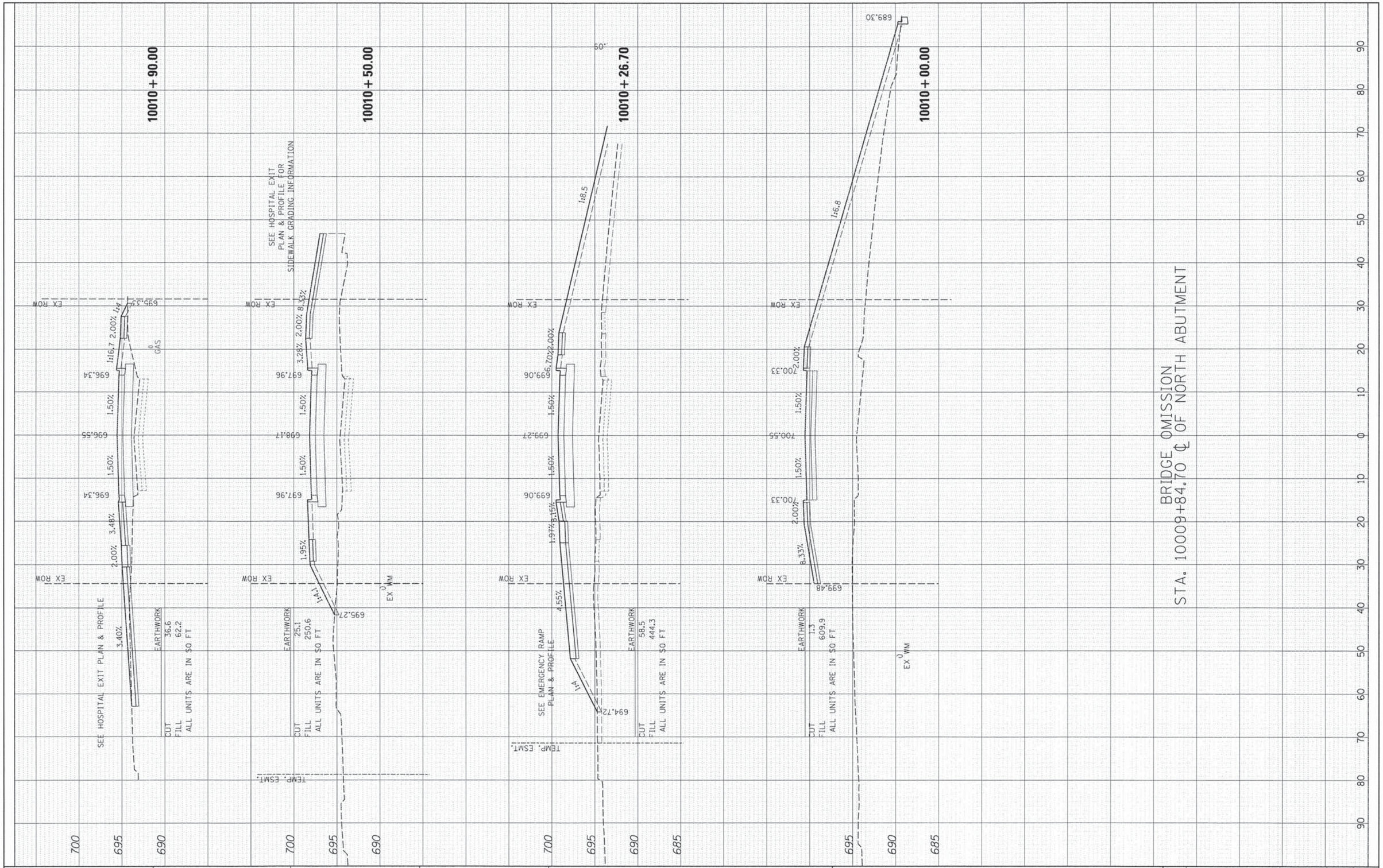

FINAL SURVEY	BY	DATE
SURVEYED		
PLOTTED		
TEMPLATE		
AREAS		
AREAS CHECKED		
NOTE BOOK NO.		

ORIGINAL SURVEY	BY	DATE
SURVEYED		
PLOTTED		
TEMPLATE		
AREAS		
AREAS CHECKED		
NOTE BOOK NO.		

USER NAME = dstancz	DESIGNED - TSC	REVISED -
FILE NAME = 032_XSC_Oak_sheet.dgn	DRAWN - DS	REVISED -
PLOT SCALE = 1"=10'	CHECKED - RD	REVISED -
PLOT DATE = 12/16/2014	DATE - 12/16/14	REVISED -

STATE OF ILLINOIS
DEPARTMENT OF TRANSPORTATION

PROPOSED CROSS SECTIONS
OAK STREET

SCALE: 1"=10' | SHEET 4 OF 6 SHEETS | STA. 10010+00 TO STA. 10010+63.50

F.A.U. RTE.	SECTION	COUNTY	TOTAL SHEETS	SHEET NO.
2999	10-00089-00-BR	DUPAGE	157	147

CONTRACT NO.

ILLINOIS FED. AID PROJECT

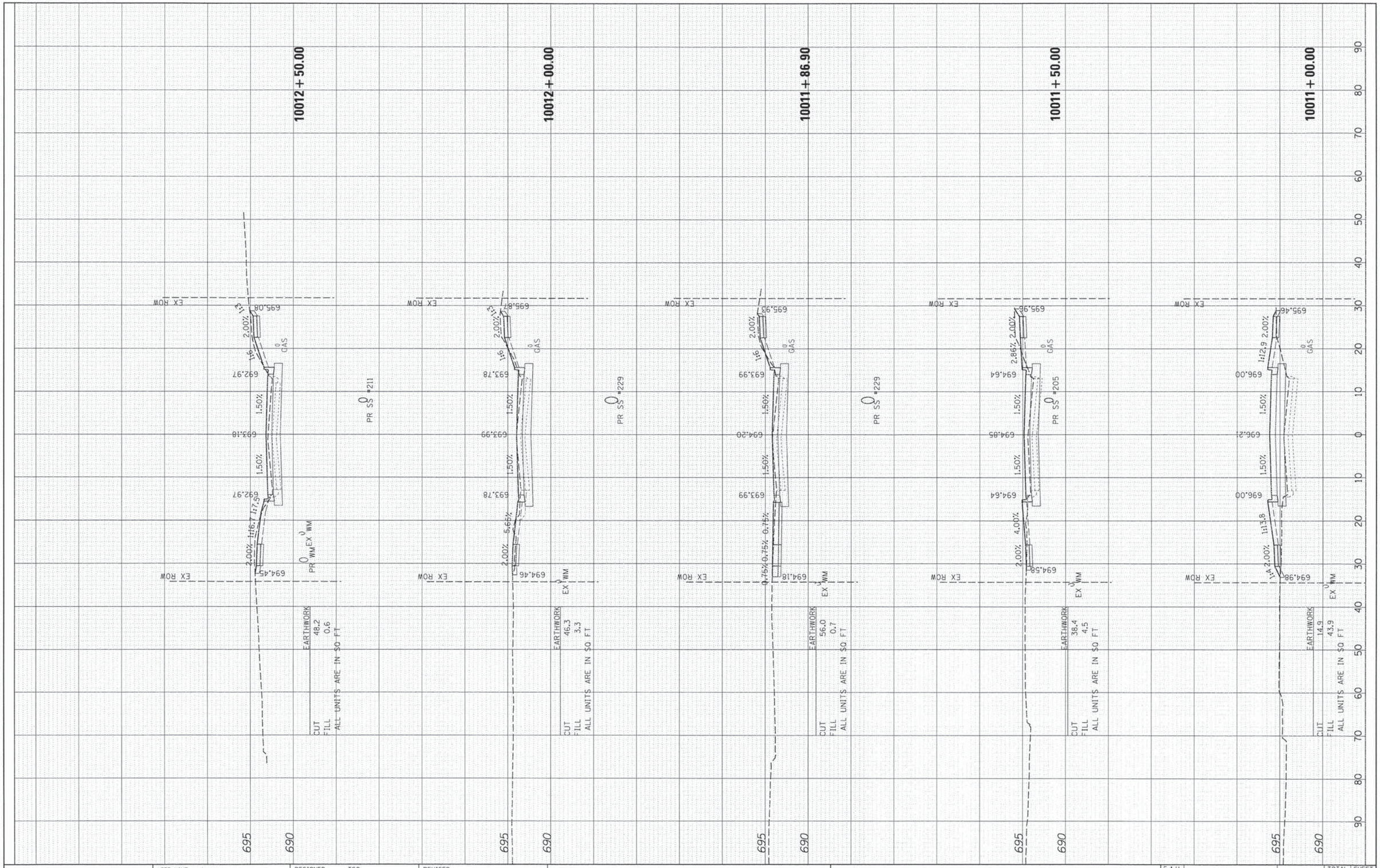

FINAL SURVEY	BY	DATE
SURVEYED		
PLOTTED		
TEMPLATE		
AREAS		
AREAS CHECKED		
NOTE BOOK NO.		

ORIGINAL SURVEY	BY	DATE
SURVEYED		
PLOTTED		
TEMPLATE		
AREAS		
AREAS CHECKED		
NOTE BOOK NO.		

USER NAME = dstanoz	DESIGNED - TSC	REVISED -
FILE NAME = 032.XSC.Oak.sheet.dgn	DRAWN - DS	REVISED -
PLOT SCALE = 1':10'	CHECKED - RD	REVISED -
PLOT DATE = 12/16/2014	DATE - 12/16/14	REVISED -

STATE OF ILLINOIS
DEPARTMENT OF TRANSPORTATION

PROPOSED CROSS SECTIONS
OAK STREET

SCALE: 1"=10' | SHEET 5 OF 6 SHEETS | STA. 10011+00 TO STA. 10012+50

F.A.U. RTE.	SECTION	COUNTY	TOTAL SHEETS	SHEET NO.
2999	10-00089-00-BR	DUPAGE	157	148

CONTRACT NO.

ILLINOIS FED. AID PROJECT

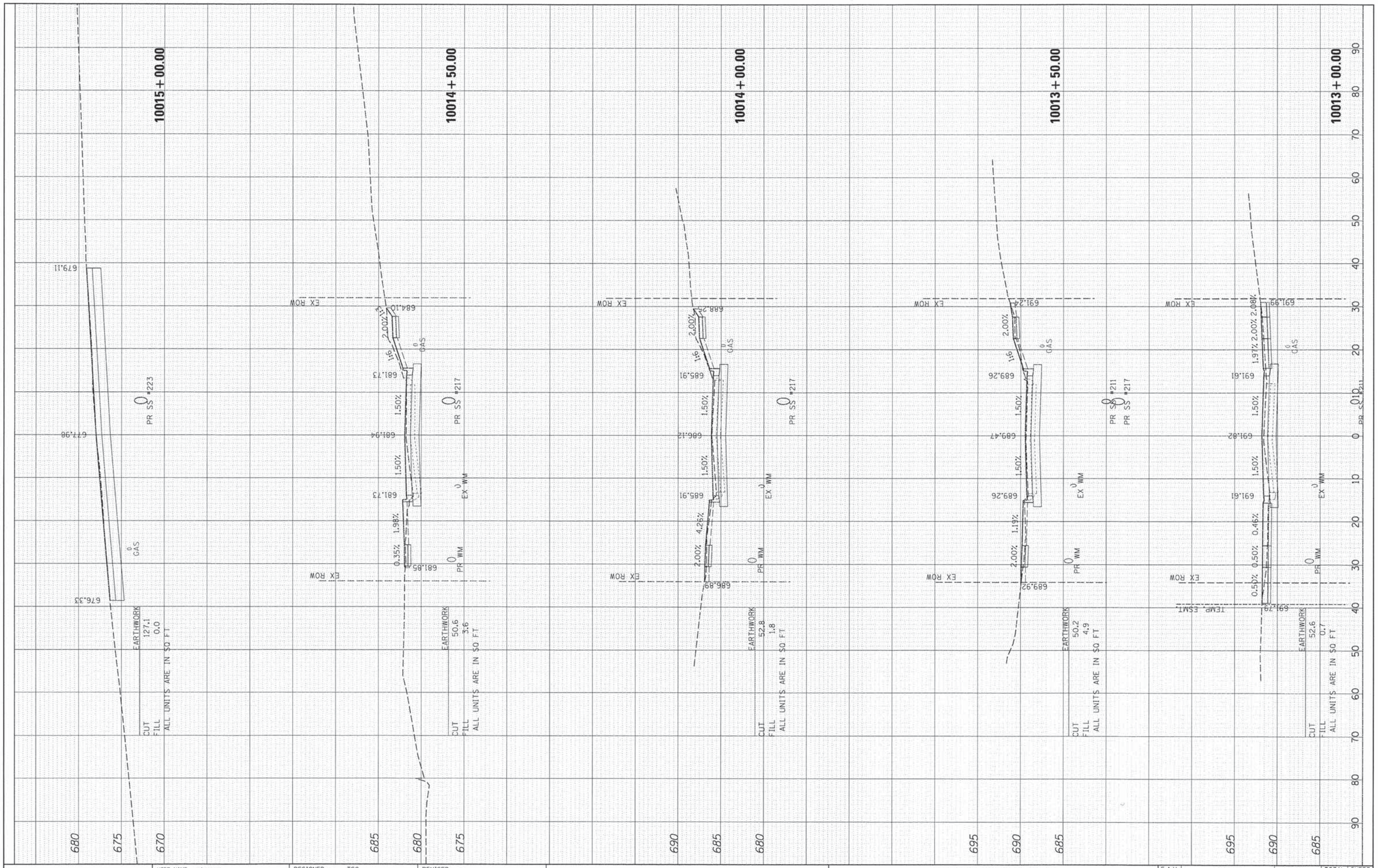

FINAL SURVEY	BY	DATE
SURVEYED		
PLOTTED		
TRACED		
INVERTS		
NOTE BOOK		
NO.	AREAS CHECKED	

ORIGINAL SURVEY	BY	DATE
SURVEYED		
PLOTTED		
TRACED		
INVERTS		
NOTE BOOK		
NO.	AREAS CHECKED	

USER NAME = dstancz	DESIGNED - TSC	REVISED -
FILE NAME = 032_XSC_Oak_sheet.dgn	DRAWN - DS	REVISED -
PLOT SCALE = 1"=10'	CHECKED - RD	REVISED -
PLOT DATE = 12/16/2014	DATE - 12/16/14	REVISED -

STATE OF ILLINOIS
DEPARTMENT OF TRANSPORTATION

PROPOSED CROSS SECTIONS
OAK STREET

SCALE: 1"=10' | SHEET 6 OF 6 SHEETS | STA. 10013+00 TO STA. 10015+00

F.A.U. RTE.	SECTION	COUNTY	TOTAL SHEETS	SHEET NO.
2999	10-00089-00-BR	DUPAGE	157	149

CONTRACT NO.

ILLINOIS FED. AID PROJECT

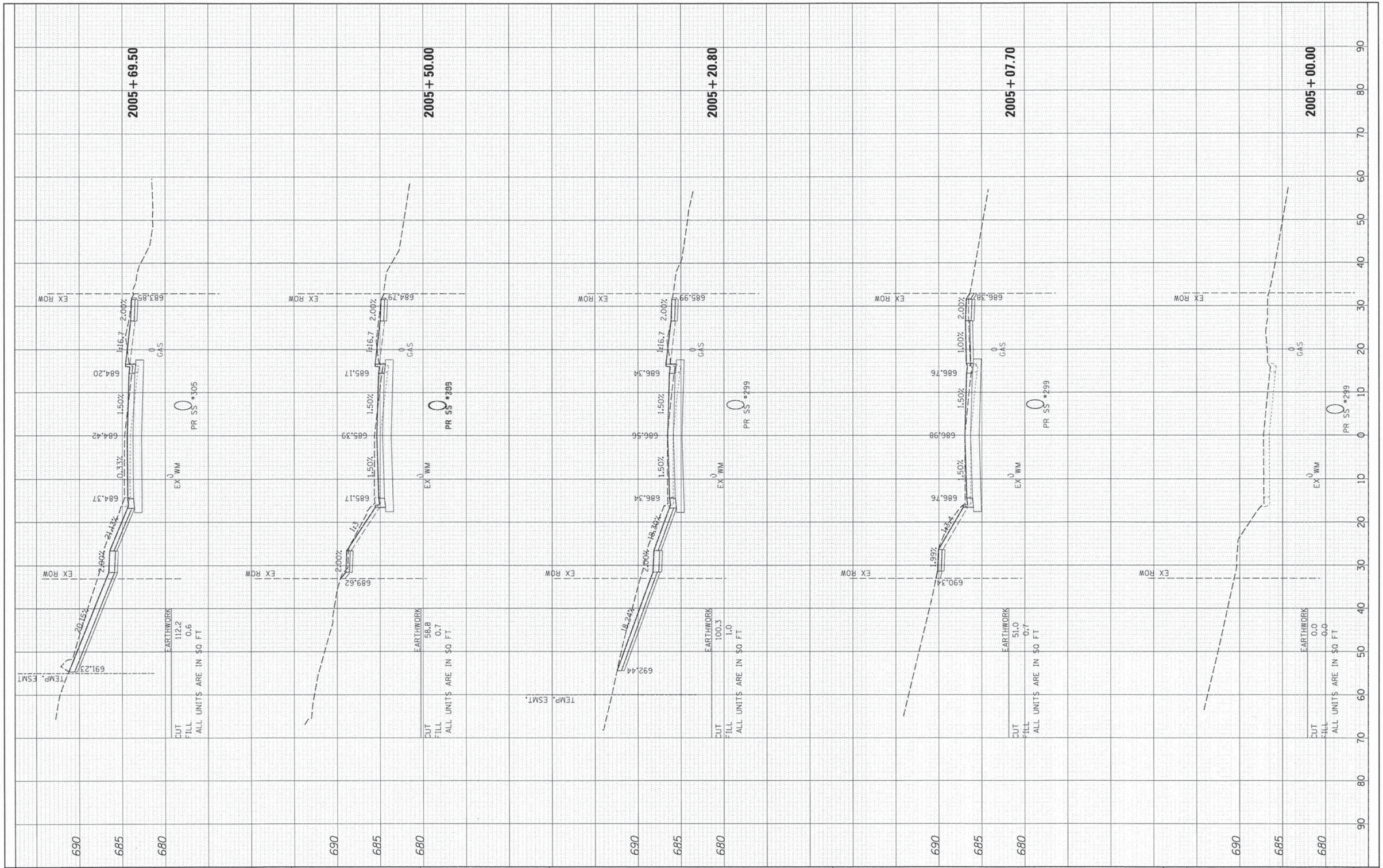

FINAL SURVEY	BY	DATE
SURVEYED		
PLOTTED		
TEMPLATE		
AREAS		
AREAS CHECKED		
NOTE BOOK NO.		

ORIGINAL SURVEY	BY	DATE
SURVEYED		
PLOTTED		
TEMPLATE		
AREAS		
AREAS CHECKED		
NOTE BOOK NO.		

USER NAME = dstanoz	DESIGNED - TSC	REVISED -
FILE NAME = 032.XSC.Chicago.sheet.dgn	DRAWN - DS	REVISED -
PLOT SCALE = 1"=10'	CHECKED - RD	REVISED -
PLOT DATE = 12/16/2014	DATE - 12/16/14	REVISED -

STATE OF ILLINOIS
DEPARTMENT OF TRANSPORTATION

PROPOSED CROSS SECTIONS
CHICAGO AVENUE

SCALE: 1"=10' | SHEET 1 OF 3 SHEETS | STA. 2005+00 TO STA. 2005+69.50

F.A.U. RTE.	SECTION	COUNTY	TOTAL SHEETS	SHEET NO.
2999	10-00089-00-BR	DUPAGE	157	150
		CONTRACT NO.		
	ILLINOIS FED. AID PROJECT			

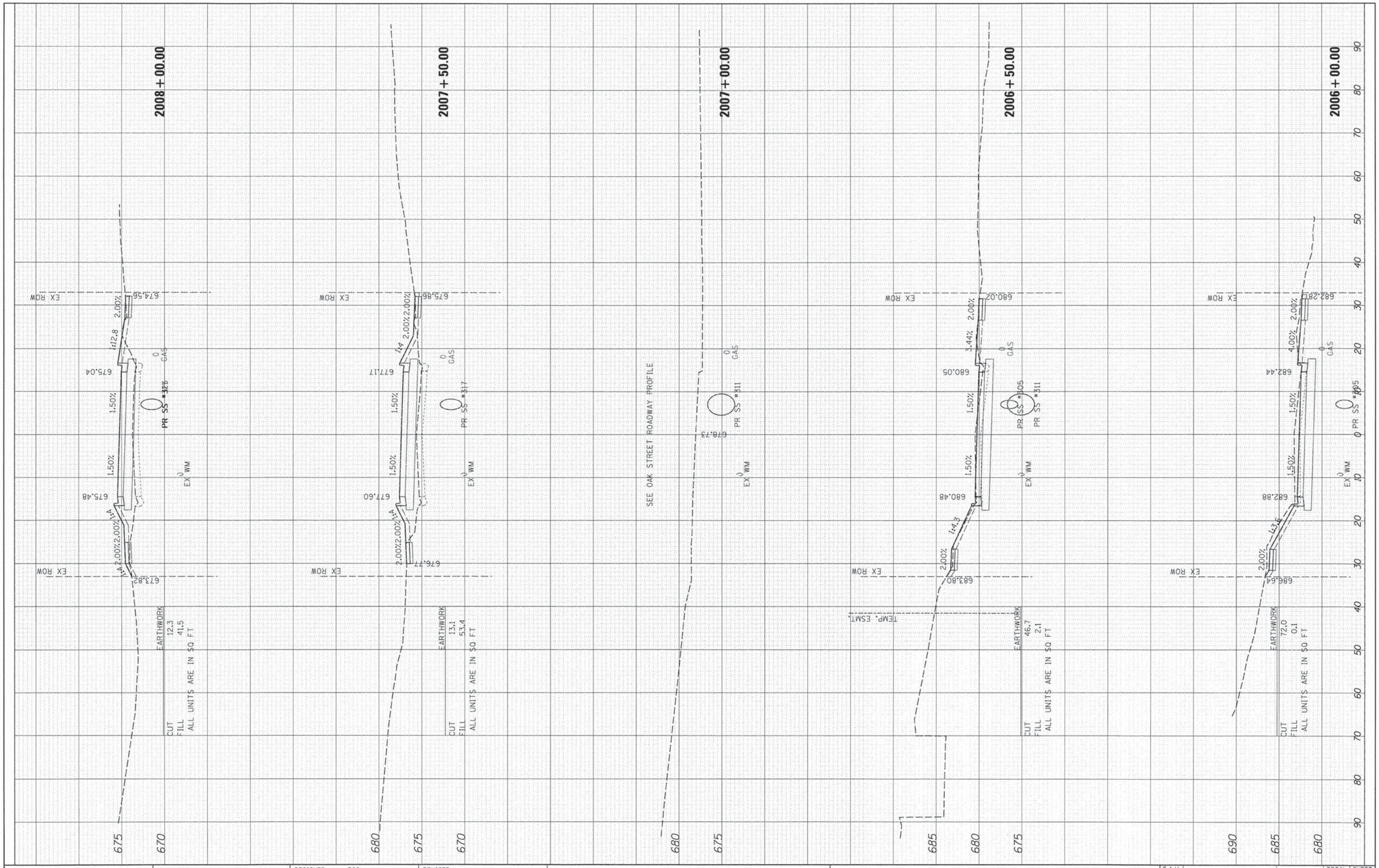

FINAL SURVEY		BY	DATE
NOTE BOOK	SURVEYED		
	PLOTTED		
	TEMPLATE		
	AREAS		
NO.	AREAS CHECKED		

ORIGINAL SURVEY		BY	DATE
NOTE BOOK	SURVEYED		
	PLOTTED		
	TEMPLATE		
	AREAS		
NO.	AREAS CHECKED		

USER NAME = dstancz	DESIGNED - TSC	REVISED -	
FILE NAME = 032_XSC_Chicago_sheet.dgn	DRAWN - DS	REVISED -	
PLOT SCALE = 1':10'	CHECKED - RD	REVISED -	
PLOT DATE = 12/16/2014	DATE - 12/16/14	REVISED -	

STATE OF ILLINOIS
DEPARTMENT OF TRANSPORTATION

PROPOSED CROSS SECTIONS
CHICAGO AVENUE

SCALE: 1"=10' | SHEET 2 OF 3 SHEETS | STA. 2006+00 TO STA. 2008+00

F.A.U. RTE.	SECTION	COUNTY	TOTAL SHEETS	SHEET NO.
2999	10-00089-00-BR	DUPAGE	157	151

CONTRACT NO.

ILLINOIS FED. AID PROJECT

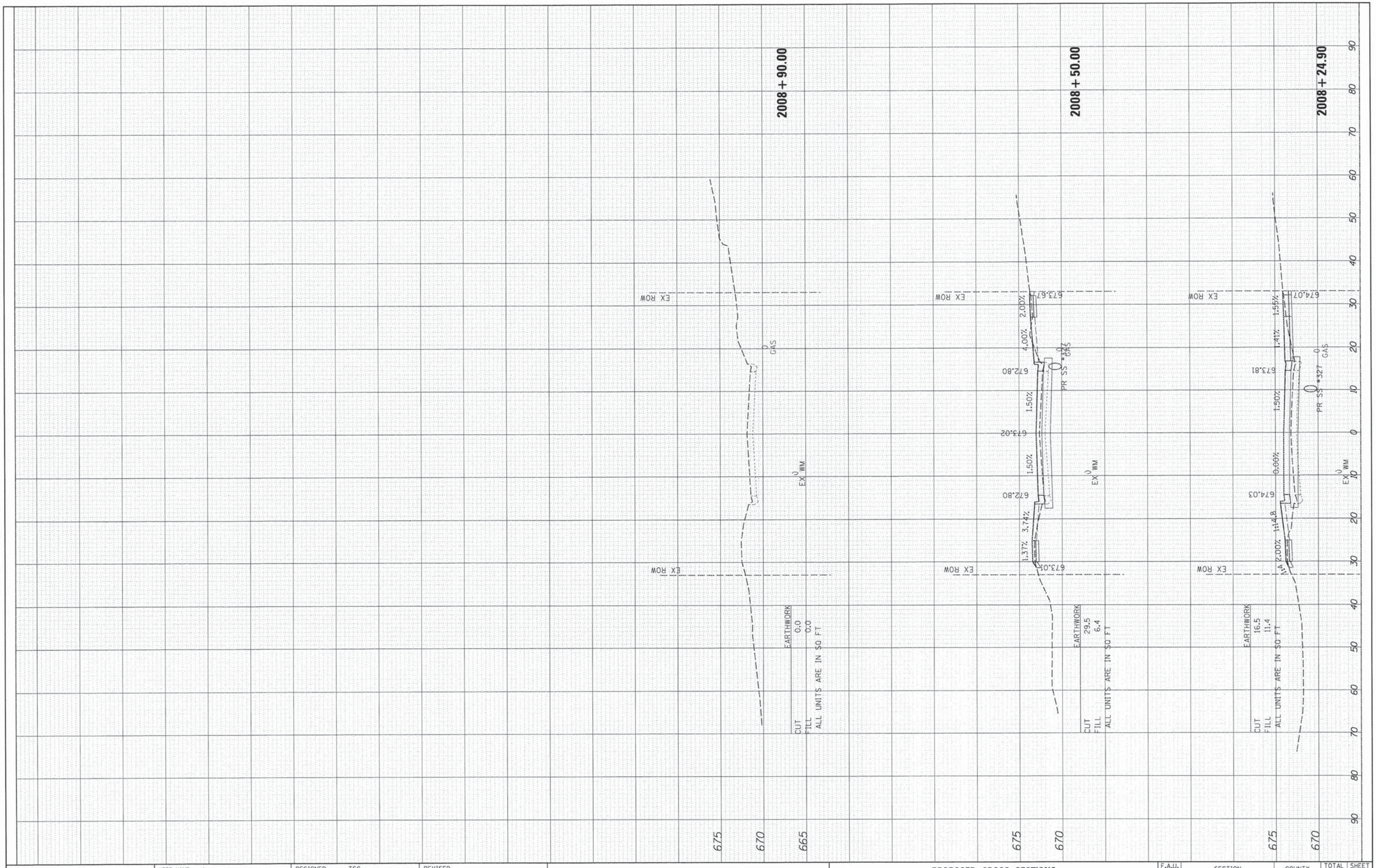

FINAL SURVEY	BY	DATE
SURVEYED		
PLOTTED		
TEMPLATE		
AREAS		
AREAS CHECKED		
NOTE BOOK NO.		

ORIGINAL SURVEY	BY	DATE
SURVEYED		
PLOTTED		
TEMPLATE		
AREAS		
AREAS CHECKED		
NOTE BOOK NO.		

USER NAME = dstanoz	DESIGNED - TSC	REVISED -
FILE NAME = 032_XSC_Chicago_sheet.dgn	DRAWN - DS	REVISED -
PLOT SCALE = 1"=10'	CHECKED - RD	REVISED -
PLOT DATE = 12/16/2014	DATE - 12/16/14	REVISED -

STATE OF ILLINOIS
DEPARTMENT OF TRANSPORTATION

PROPOSED CROSS SECTIONS
CHICAGO AVENUE

SCALE: 1"=10' | SHEET 3 OF 3 SHEETS | STA. 2008+00 TO STA. 2008+90

F.A.U. RTE.	SECTION	COUNTY	TOTAL SHEETS	SHEET NO.
2999	10-00089-00-BR	DUPAGE	157	152

CONTRACT NO.

ILLINOIS FED. AID PROJECT

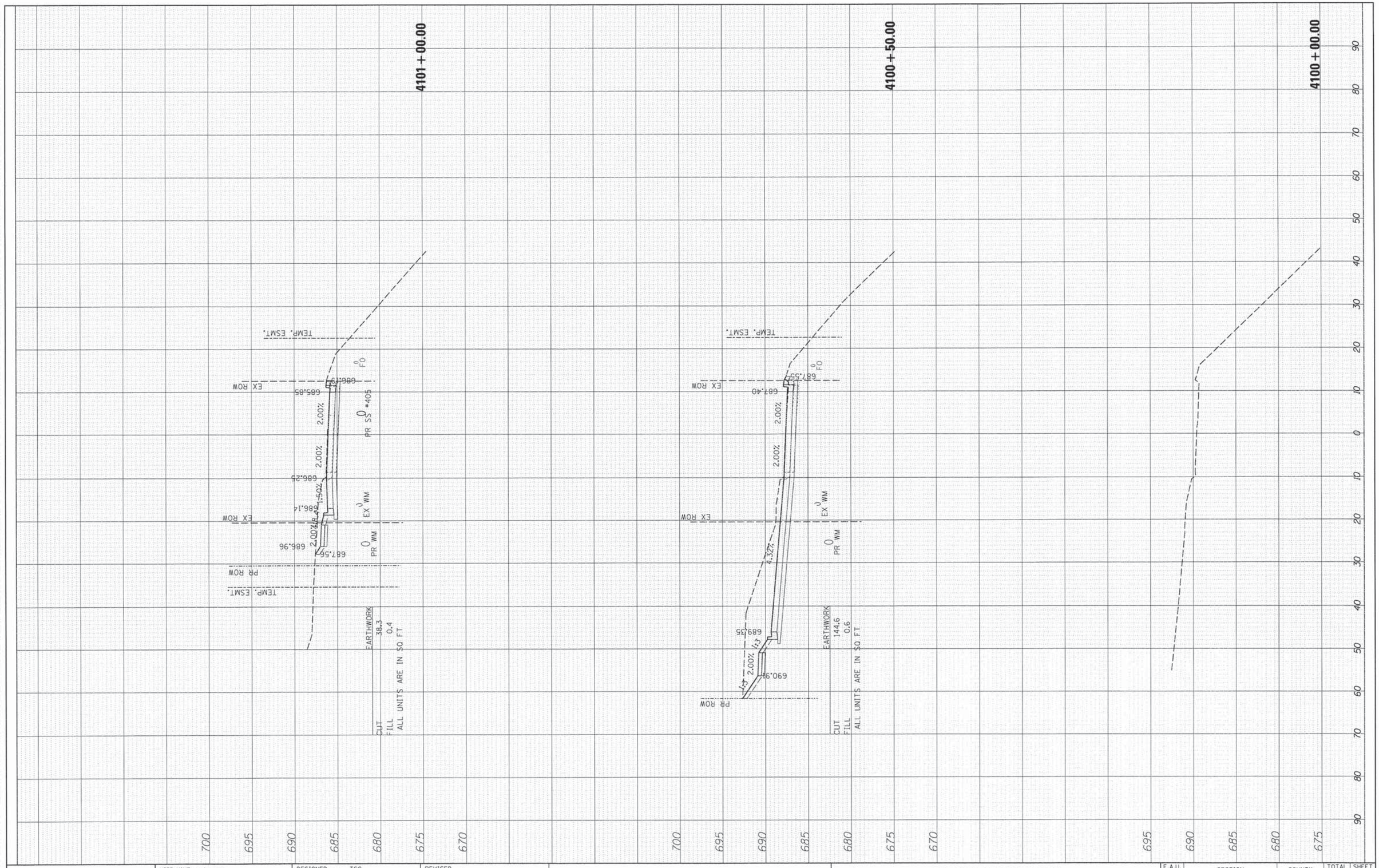

FINAL SURVEY	BY	DATE
SURVEYED		
PLOTTED		
TEMPLATE		
AREAS		
AREAS CHECKED		
NOTE BOOK NO.		

ORIGINAL SURVEY	BY	DATE
SURVEYED		
PLOTTED		
TEMPLATE		
AREAS		
AREAS CHECKED		
NOTE BOOK NO.		

USER NAME = dstancz	DESIGNED - TSC	REVISED -
FILE NAME = 032.XSC_sht_Hillgrove.dgn	DRAWN - DS	REVISED -
PLOT SCALE = 1':10'	CHECKED - RD	REVISED -
PLOT DATE = 12/16/2014	DATE - 12/16/14	REVISED -

STATE OF ILLINOIS
DEPARTMENT OF TRANSPORTATION

PROPOSED CROSS SECTIONS
HILLGROVE AVENUE

SCALE: 1"=10' | SHEET 1 OF 5 SHEETS | STA. 4100+00 TO STA. 4101+00

F.A.U. RTE.	SECTION	COUNTY	TOTAL SHEETS	SHEET NO.
2999	10-00089-00-BR	DUPAGE	157	153

CONTRACT NO.

ILLINOIS FED. AID PROJECT

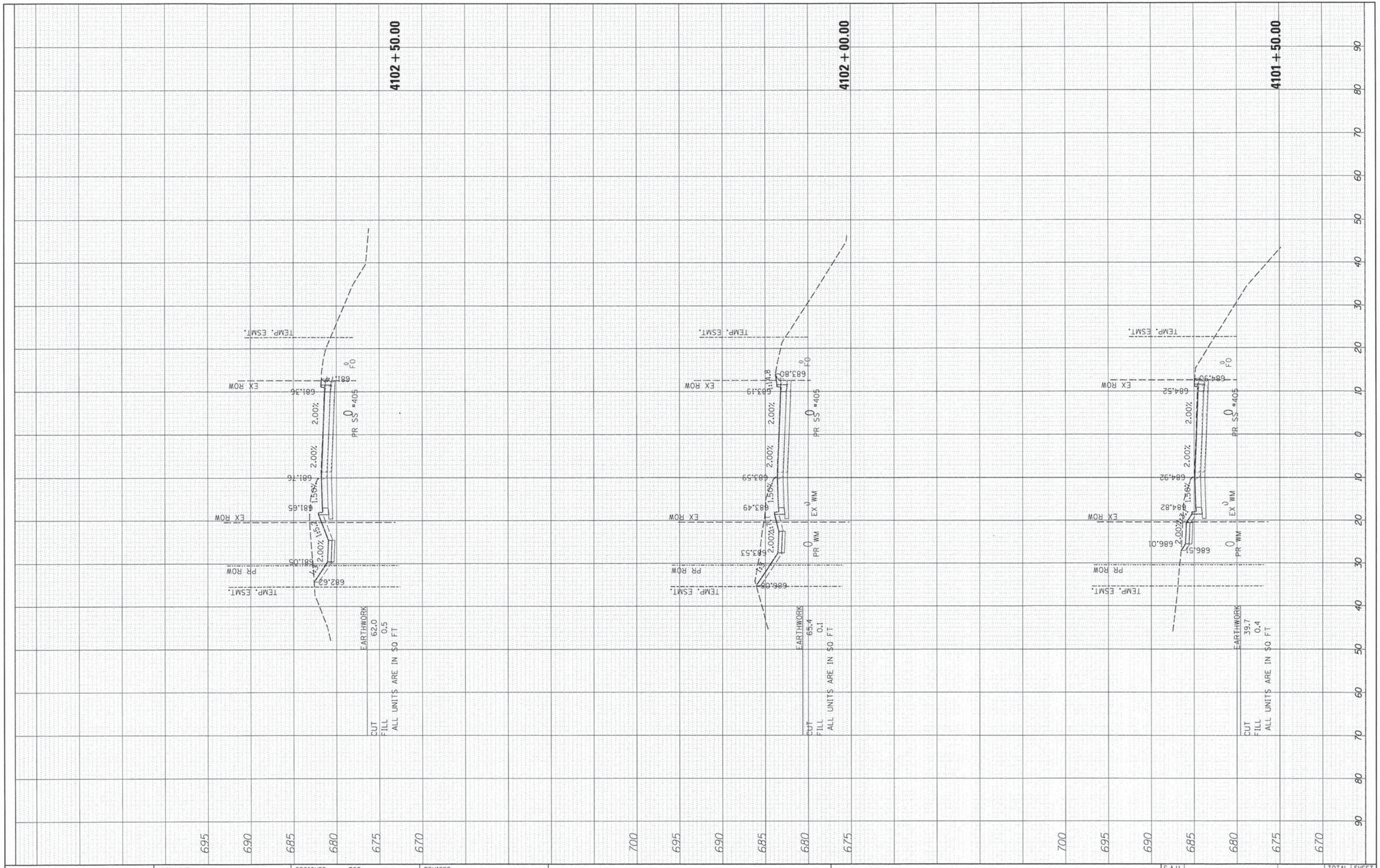

FINAL SURVEY	BY	DATE
SURVEYED		
PLOTTED		
TEMPLATE		
AREAS		
AREAS CHECKED		
NOTE BOOK NO.		

ORIGINAL SURVEY	BY	DATE
SURVEYED		
PLOTTED		
TEMPLATE		
AREAS		
AREAS CHECKED		
NOTE BOOK NO.		

USER NAME = dstancz	DESIGNED - TSC	REVISED -
FILE NAME = 832_XSC_sht_Hillgrove.dgn	DRAWN - DS	REVISED -
PLOT SCALE = 1"=10'	CHECKED - RD	REVISED -
PLOT DATE = 12/16/2014	DATE - 12/16/14	REVISED -

STATE OF ILLINOIS
DEPARTMENT OF TRANSPORTATION

PROPOSED CROSS SECTIONS
HILLGROVE AVENUE

SCALE: 1"=10' | SHEET 2 OF 5 SHEETS | STA. 4101+50 TO STA. 4102+50

F.A.U. RTE.	SECTION	COUNTY	TOTAL SHEETS	SHEET NO.
2999	10-00089-00-BR	DUPAGE	157	154
		CONTRACT NO.		
	ILLINOIS	FED. AID PROJECT		

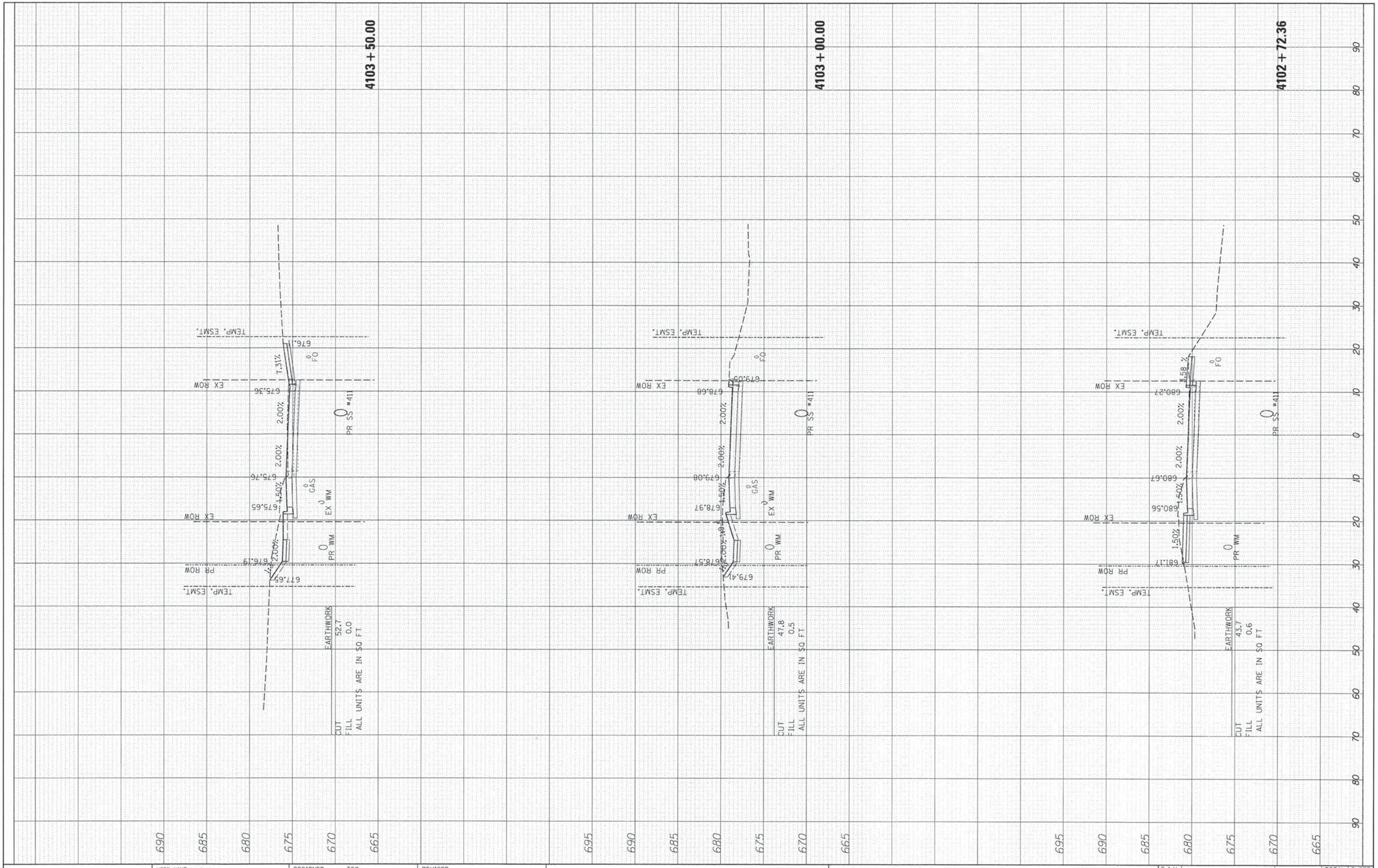

FINAL SURVEY	BY	DATE
SURVEYED		
PLOTTED		
TEMPLATE		
AREAS		
AREAS CHECKED		
NOTE BOOK NO.		

ORIGINAL SURVEY	BY	DATE
SURVEYED		
PLOTTED		
TEMPLATE		
AREAS		
AREAS CHECKED		
NOTE BOOK NO.		

USER NAME = dstanoz	DESIGNED - TSC	REVISED -
FILE NAME = 032.XSC.sht.Hillgrove.dgn	DRAWN - DS	REVISED -
PLOT SCALE = 1":10'	CHECKED - RD	REVISED -
PLOT DATE = 12/16/2014	DATE - 12/16/14	REVISED -

STATE OF ILLINOIS
DEPARTMENT OF TRANSPORTATION

PROPOSED CROSS SECTIONS
HILLGROVE AVENUE

SCALE: 1"=10' | SHEET 3 OF 5 SHEETS | STA. 4102+72.36 TO STA. 4103+50

F.A.U. RTE.	SECTION	COUNTY	TOTAL SHEETS	SHEET NO.
2999	10-00089-00-BR	DUPAGE	157	155

CONTRACT NO.

ILLINOIS FED. AID PROJECT

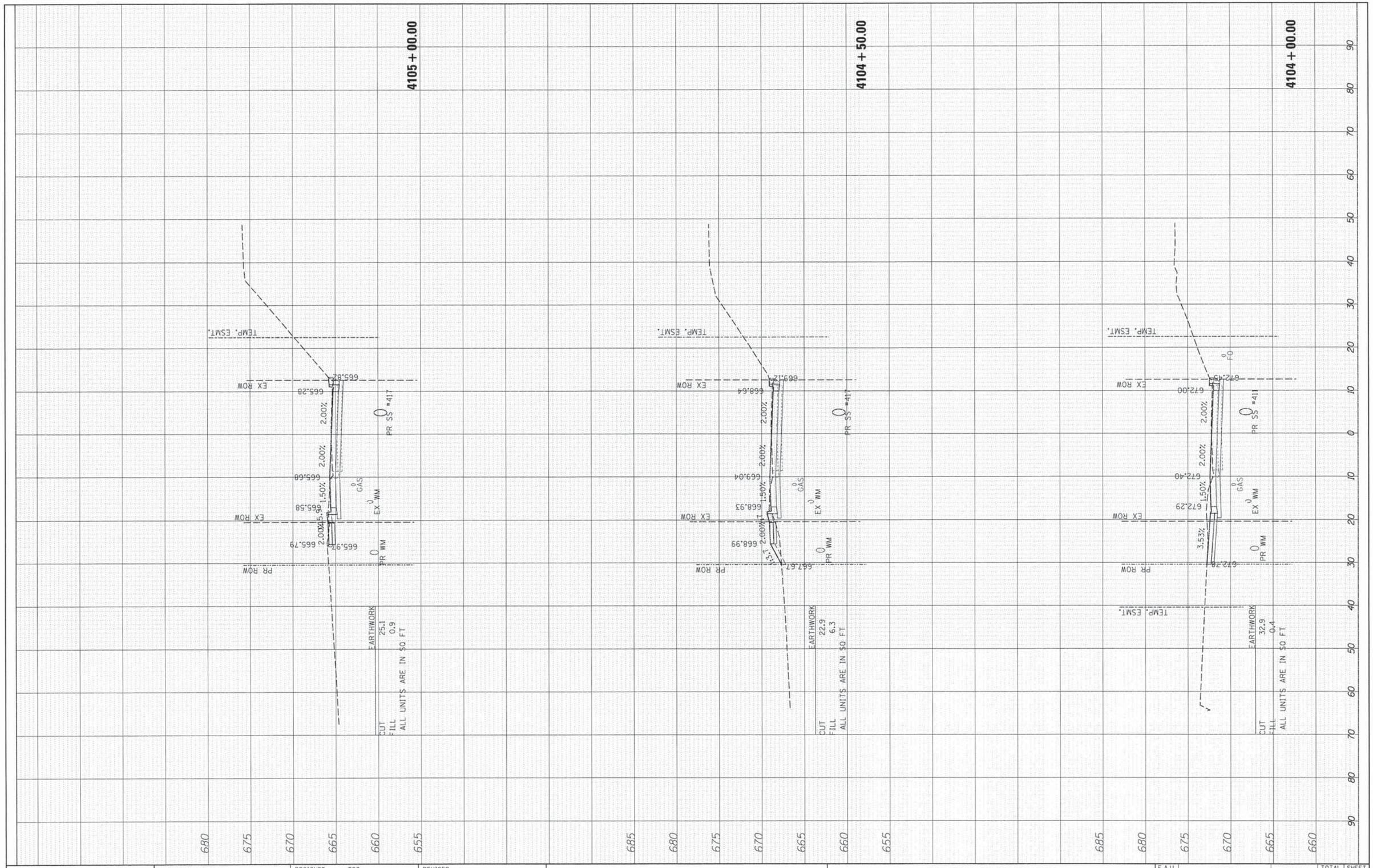

FINAL SURVEY	BY	DATE
SURVEYED		
PLOTTED		
TEMPLATE		
AREAS		
AREAS CHECKED		
NOTE BOOK NO.		

ORIGINAL SURVEY	BY	DATE
SURVEYED		
PLOTTED		
TEMPLATE		
AREAS		
AREAS CHECKED		
NOTE BOOK NO.		

USER NAME = dstanez	DESIGNED - TSC	REVISED -
FILE NAME = 032_XSC_sht_Hillgrove.dgn	DRAWN - DS	REVISED -
PLOT SCALE = 1":10'	CHECKED - RD	REVISED -
PLOT DATE = 12/16/2014	DATE - 12/16/14	REVISED -

STATE OF ILLINOIS
DEPARTMENT OF TRANSPORTATION

PROPOSED CROSS SECTIONS
HILLGROVE AVENUE

SCALE: 1":10' | SHEET 4 OF 5 SHEETS | STA. 4104+00 TO STA. 4105+00

F.A.U. RTE.	SECTION	COUNTY	TOTAL SHEETS	SHEET NO.
2999	10-00089-00-BR	DUPAGE	157	156
		CONTRACT NO.		
	ILLINOIS	FED. AID PROJECT		

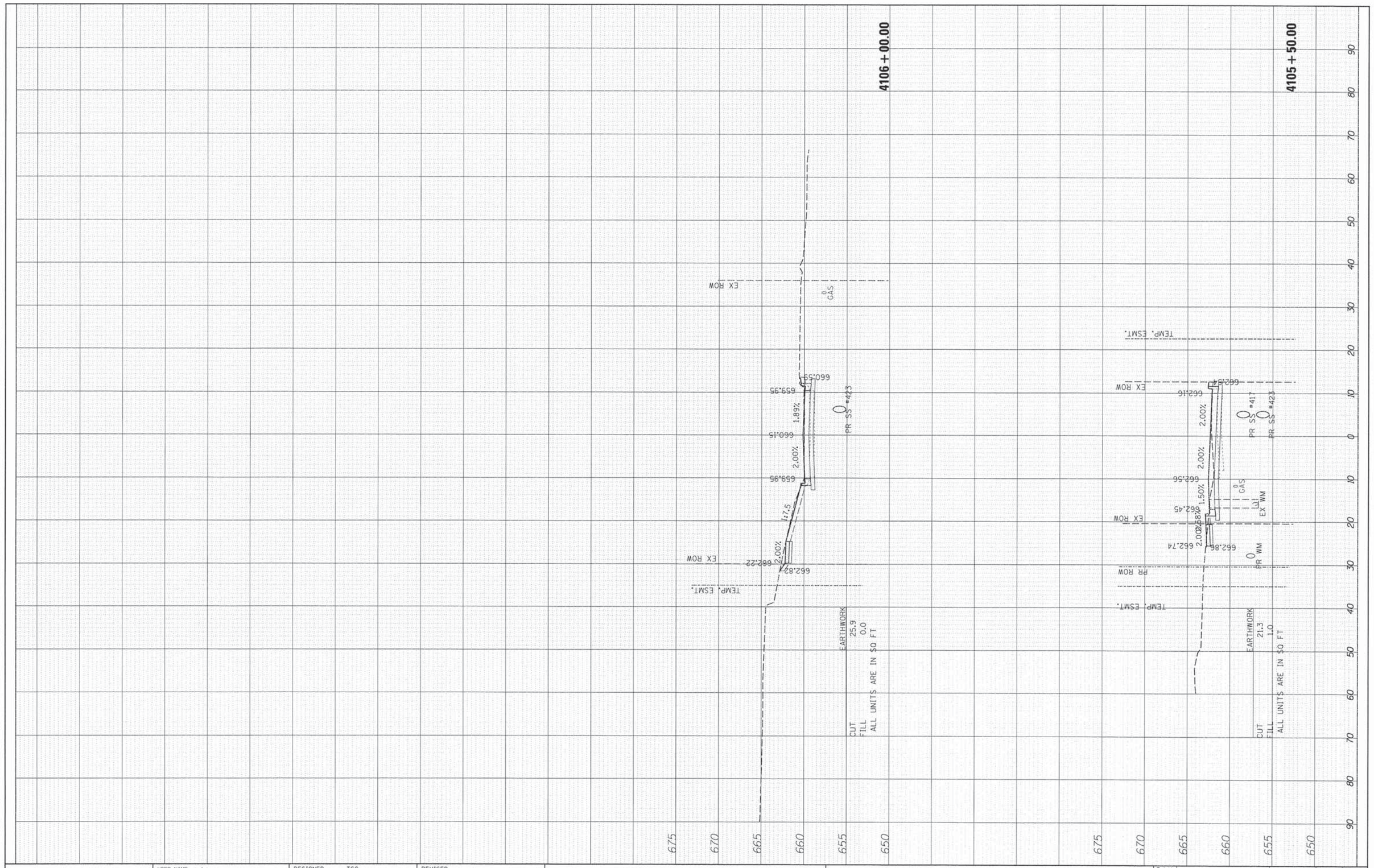

FINAL SURVEY	BY	DATE
SURVEYED		
PLOTTED		
TRANSITE		
AREAS		
AREAS CHECKED		
NOTE BOOK NO.		

ORIGINAL SURVEY	BY	DATE
SURVEYED		
PLOTTED		
TRANSITE		
AREAS		
AREAS CHECKED		
NOTE BOOK NO.		

USER NAME = dstancz	DESIGNED - TSC	REVISED -
FILE NAME = 032.XSC_sht_Hillgrove.dgn	DRAWN - DS	REVISED -
PLOT SCALE = 1"=10'	CHECKED - RD	REVISED -
PLOT DATE = 12/16/2014	DATE - 12/16/14	REVISED -

STATE OF ILLINOIS
DEPARTMENT OF TRANSPORTATION

PROPOSED CROSS SECTIONS
HILLGROVE AVENUE

SCALE: 1"=10' | SHEET 5 OF 5 SHEETS | STA. 4105+50 TO STA. 4106+00

F.A.U. RTE.	SECTION	COUNTY	TOTAL SHEETS	SHEET NO.
2999	10-00089-00-BR	DUPAGE	157	157
		CONTRACT NO.		
		ILLINOIS FED. AID PROJECT		