ITEM 3A

VE044

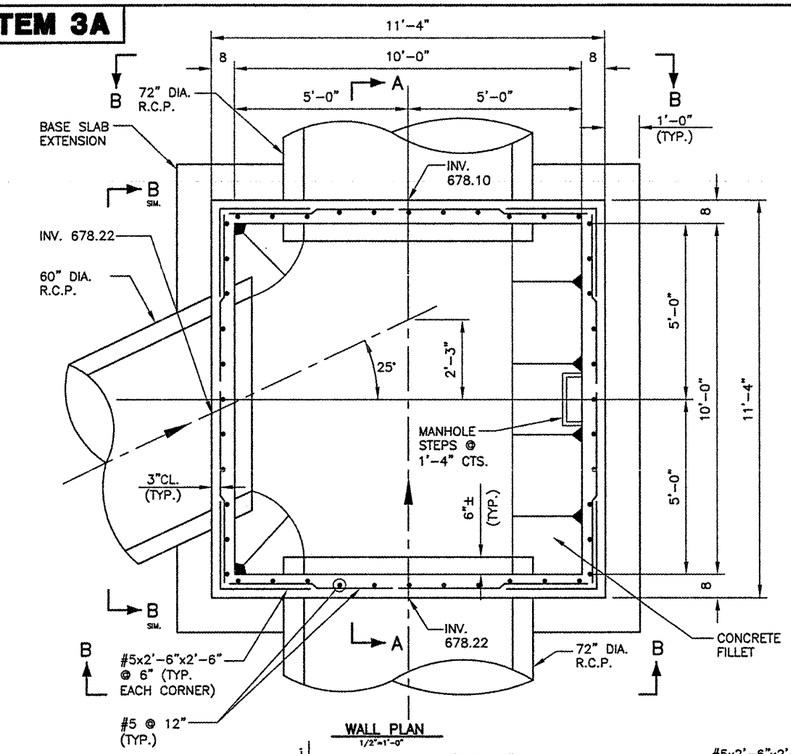

WALL PLAN
1/2"=1'-0"

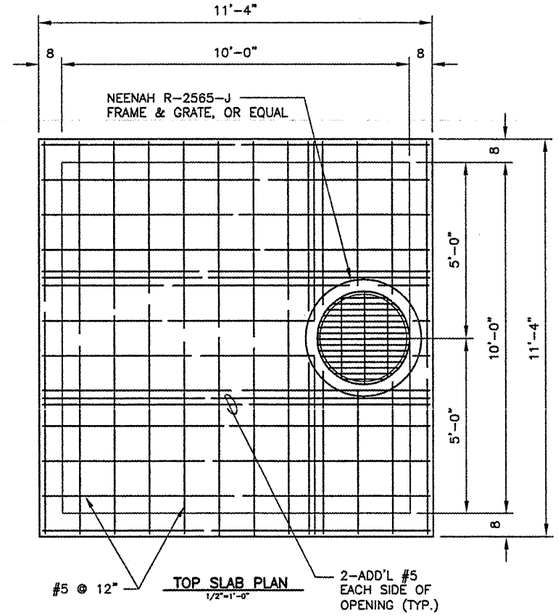

TOP SLAB PLAN
1/2"=1'-0"

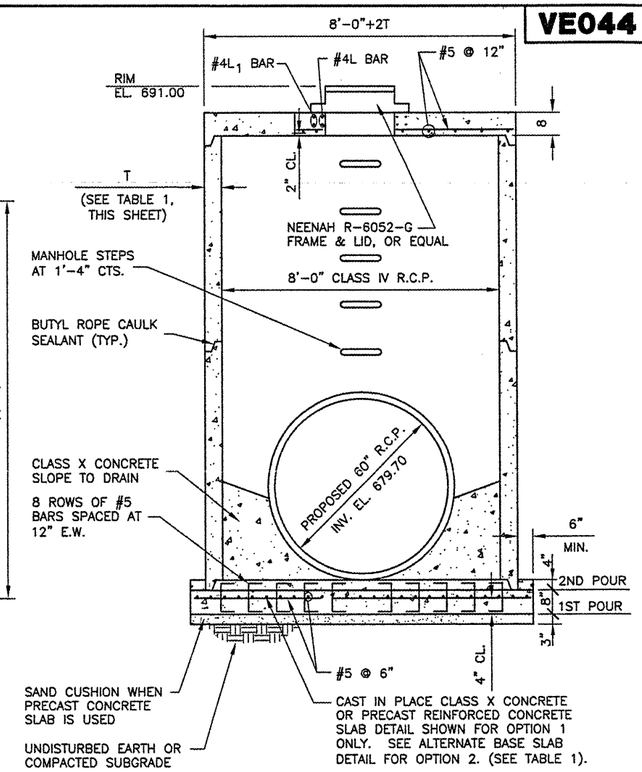

SECTION C
N.T.S.

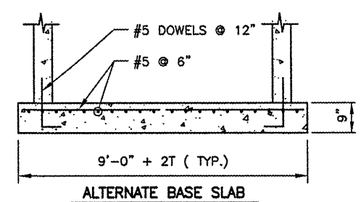

ALTERNATE BASE SLAB
(OPTION 2 ONLY. SEE TABLE 1)
N.T.S.

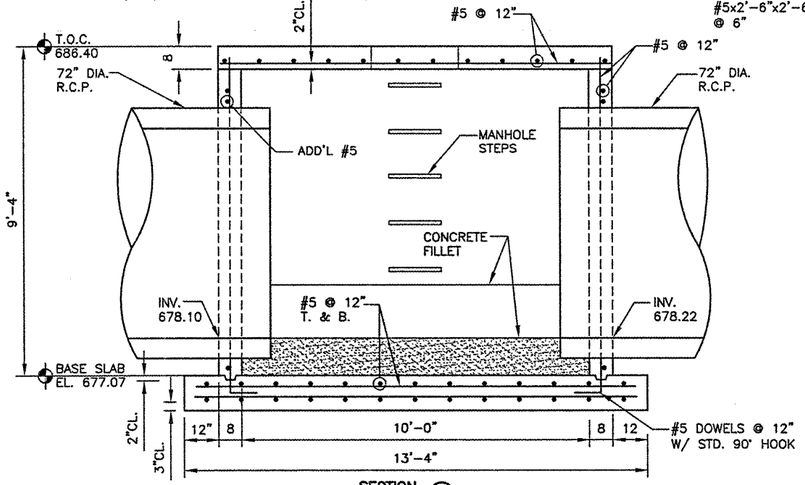

SECTION A
1/2"=1'-0"

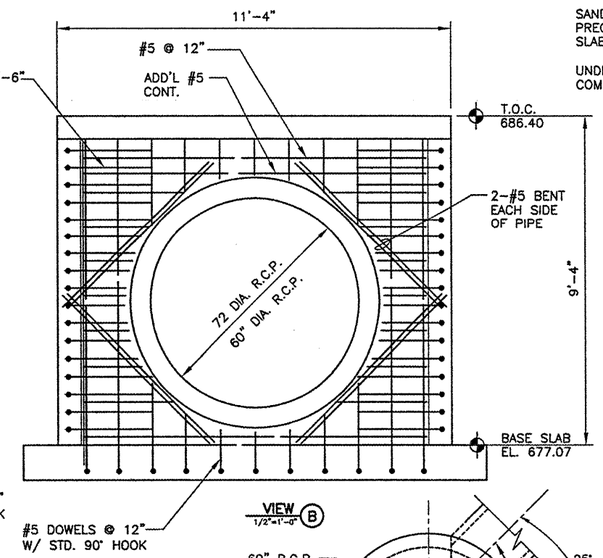

VIEW B
1/2"=1'-0"

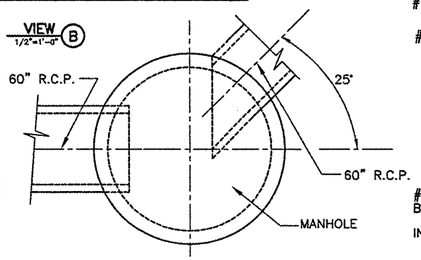

STORM STRUCTURE A
N.T.S.

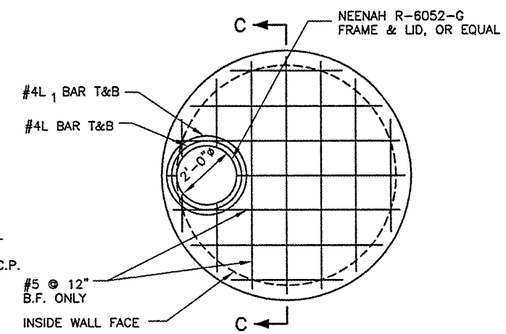

PLAN
N.T.S.

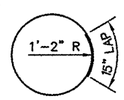

L BAR

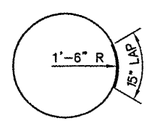

L1 BAR

TABLE 1		
OPTION	ALTERNATE MATERIALS FOR WALLS	T (MIN.)
1	PRECAST REINFORCED CONCRETE PIPE SECTIONS PER ASTM C76	9"
2	CAST-IN-PLACE CONCRETE	8"

NOTES

1. DETAILS SHOWN ARE FOR OPTION 1. SEE TABLE 1.
2. OPENINGS IN PRE-CAST PIPE SECTION (OPTION 1) FOR SEWER PIPE SHALL BE EQUIVALENT TO THE OUTSIDE DIAMETER OF THE SEWER PIPE PLUS TWO INCHES. GROUT OPENING SOLID WITH NON-SHRINK GROUT.

K:\Danville\p\0504203 Taxiway Extension\Draw\Sheets
FILE: 12_MHDET.dwg
LAYOUT: MHDET
UPDATE BY: dallen
SURVEY BOOK #
DATE: Mon 1/5/09 4:35pm
XREF DWG: Clntinfo.dwg

REVISIONS		
NUMBER	BY	DATE

0 1 2
THIS BAR IS EQUAL TO 2" AT FULL SCALE (34X22).

VERMILLION COUNTY AIRPORT
DANVILLE, ILLINOIS

EXTEND PARALLEL TAXIWAY 600 FEET

MANHOLE & INLET DETAILS

© Copyright CMT, Inc.

CMT
CRAWFORD, MURPHY & TILLY, INC.
CONSULTING ENGINEERS
License No. 184-000613

DESIGN BY:	JJF
DRAWN BY:	DPA/KMM
CHECKED BY:	JEF
APPROVED BY:	JEF
DATE:	01/09/2009
JOB No:	05042-0300

ILLINOIS PROJECT DNV-3537
A.I.P. PROJECT 3-17-0032-B10