DESIGNER NOTES:
1. THIS DRAWING SHOULD BE USED IN CONJUNCTION WITH DISTRICT CADD STD. "URBAN ENTRANCES, ACCESSIBLE TO THE DISABLED, FOR CURBLINE SIDEWALKS."
2. THIS DRAWING IS FOR USE WHEN DISTANCE BETWEEN DRIVEWAY FLARES IS LESS THAN 6'(1.8m).
3. INCLUDE STATE STANDARD 424001 AND 606001.

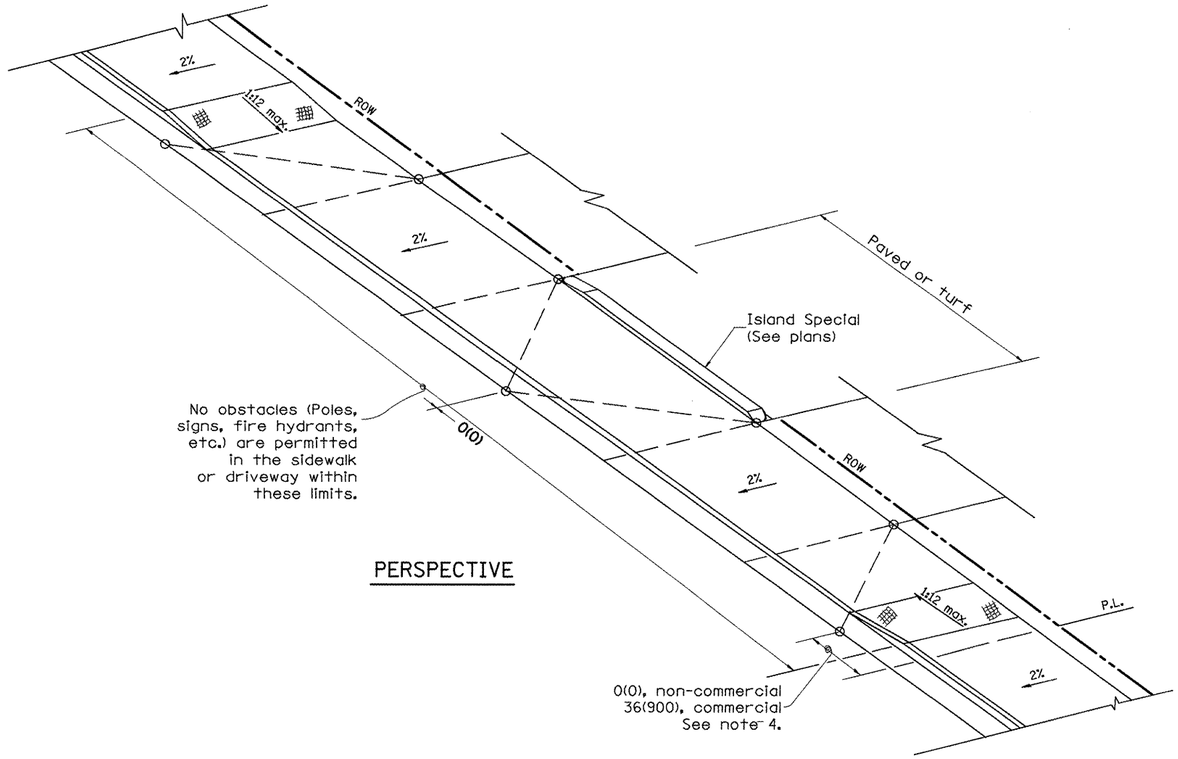

PERSPECTIVE

GENERAL NOTES

1. Refer to State Standard 424001 for texturing and other disabled accessibility design elements.
2. The sidewalk area located within the pay limits of P.C.C. Driveway Pavement will be of the same thickness and construction as the P.C.C. Driveway Pavement.
3. Combination Concrete Curb & Gutter shall be depressed in accordance with Standard 606001.
4. Exceptions to the radius flare/property line relationship are as shown in the plans for common entrances, with jointly executed access permits.

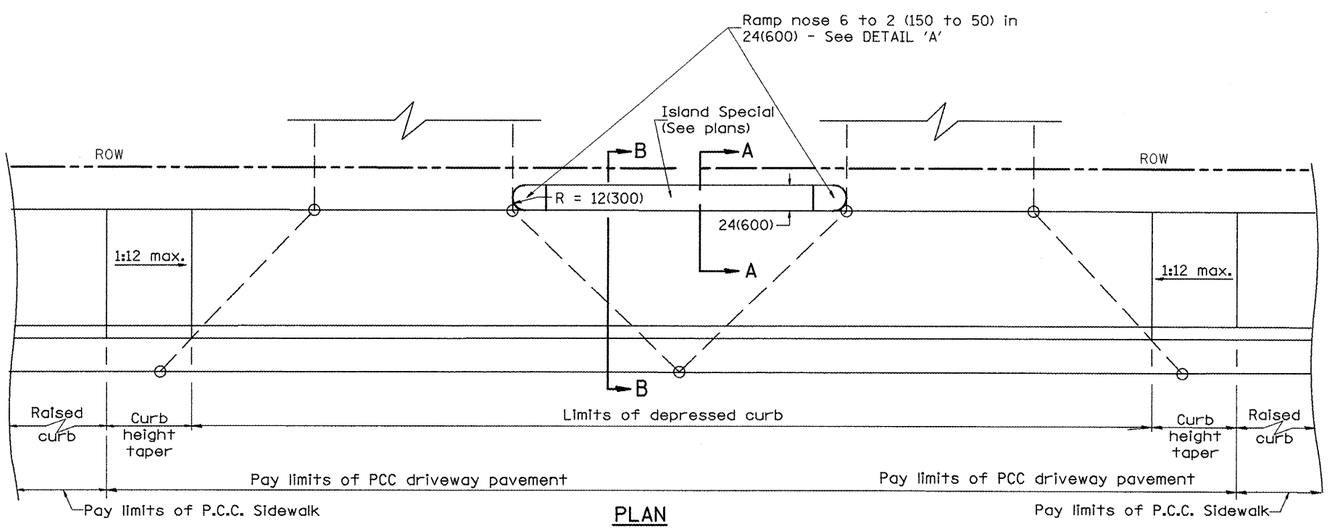

PLAN

All dimensions are in inches (millimeters) unless otherwise noted.

01-01-97	RENUM. C-103.08, NEW REVISION BOX, REVISED GENERAL NOTES	T.P.	
02-01-99	REVISE DESIGNER NOTE & B-B SECTION	J.A.	
10-16-06	REVISED TO 2007 SPEC.	M.A.	

STATE OF ILLINOIS
DEPARTMENT OF TRANSPORTATION

URBAN ENTRANCES, SPECIAL DESIGN FOR CLOSELY SPACED ENTRANCES
(WITHOUT PAVEMENT EDGE CURB BETWEEN ENTRANCES) SHT. 1 OF 2

NOT TO SCALE 429 CADD STD. 423121-D4

F.A.P. RTE.	SECTION	COUNTY	TOTAL SHEETS	SHEET NO.
399	36R-8	Tazewell	429	185
		CONTRACT NO. 68258		

FED. ROAD DIST. NO. | ILLINOIS | FED. AID PROJECT