SEC. 34 - T 22 N - R 2 E - 3RD PM

EXIST. CURVE56
PI STA. =48+00.65
△ =0° 44′ 07″ (RT)
D =0° 04′ 25″
R =77,918.66′
T =500.00′
L =999.99′
E =1.60′
e = _____
T.R. = _____
S.E. RUN = _____
P.C. STA. =43+00.65
P.T. STA. =53+00.64

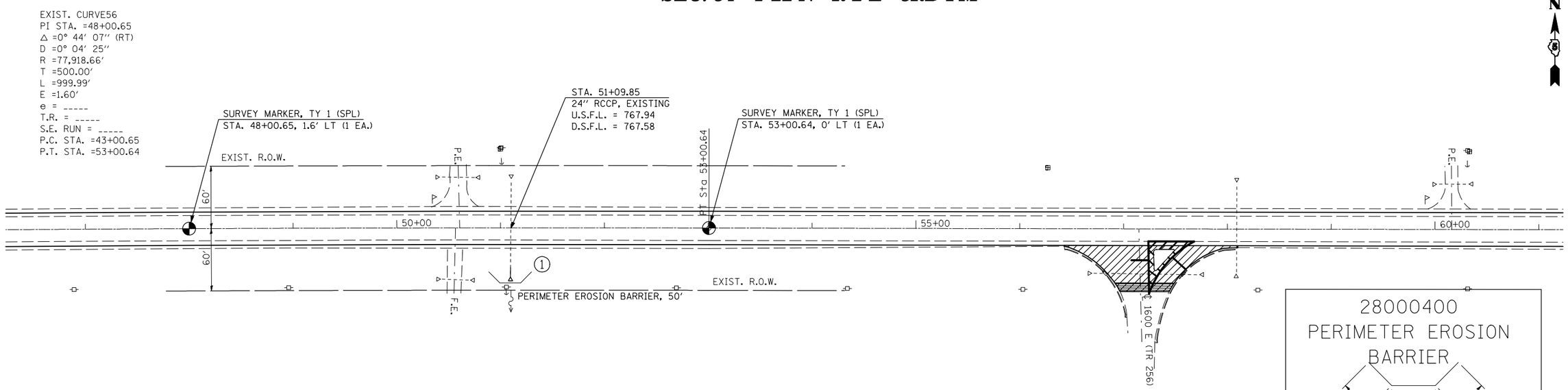

INCIDENTAL HMA SURFACING 2¼″

TEMPORARY RAMP

(#) SEE SCOPE OF WORK MAP AND CULVERT SCHEDULE FOR DETAILS AND QUANTITIES

SEC. 3 - T 21 N - R 2 E - 3RD PM

SEC. 35 - T 22 N - R 2 E - 3RD PM

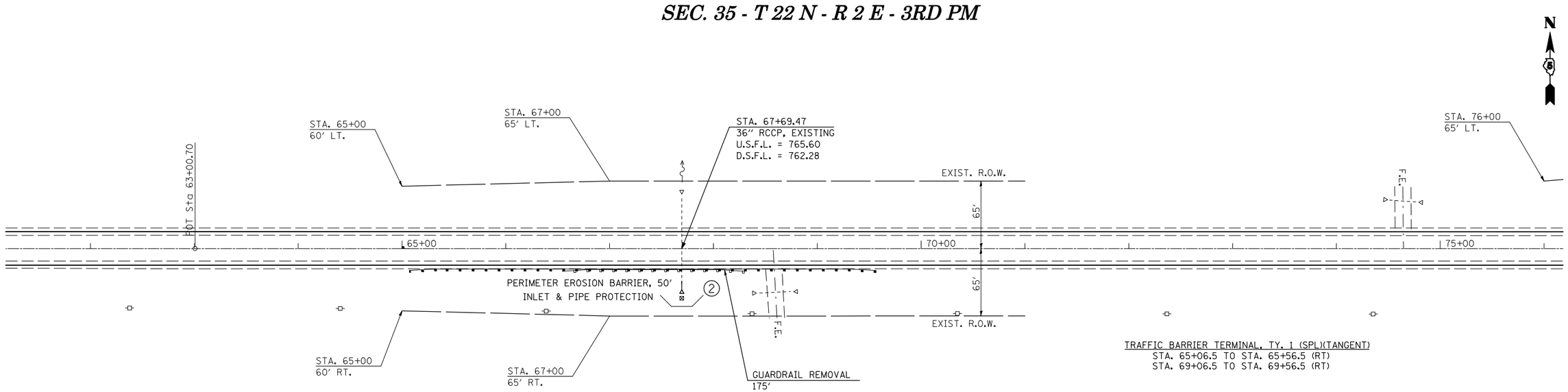

SEC. 2 - T 21 N - R 2 E - 3RD PM

FILE NAME = c:\pw_work\PWIDOT\BUCKLESJJ\d0170848\D570507-sht-plan.dgn	USER NAME = bucklesjj	DESIGNED -	REVISED -	STATE OF ILLINOIS DEPARTMENT OF TRANSPORTATION	PLAN SHEET	F.A.P. RTE.	SECTION	COUNTY	TOTAL SHEETS	SHEET NO.
		DRAWN -	REVISED -			315	*	McLean	115	26
	PLOT SCALE = 100.0000 ′ / IN.	CHECKED -	REVISED -		SCALE: SHEET NO. OF SHEETS STA. TO STA.	*(101,102X)R,RS-2 & 55RS-PRK LN		CONTRACT NO. 70507		
	PLOT DATE = 12/10/2009	DATE -	REVISED -			ILLINOIS FED. AID PROJECT				