CONTRACT NO. 70075

F.A.I. RTE.	SECTION	COUNTY	TOTAL SHEETS	SHEET NO.
57	(10-30)RA-I-2	CHAMPAIGN	119	11
STA.		TO STA.		
FED. ROAD DIST. NO.	ILLINOIS	FED. AID PROJECT		

EXISTING TYPICAL SECTION

ONSITE TRUCK PARKING LOTS

	STATION	TO	STATION
(NORTHBOUND)	194+90.00		206+27.17
(SOUTHBOUND)	233+52.17		241+27.55

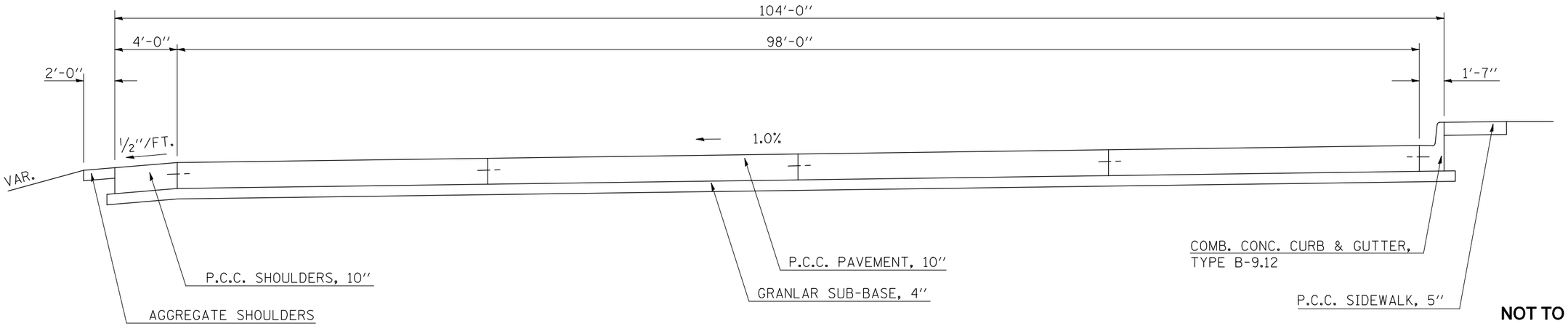

NOT TO SCALE

4. PROPOSED TYPICAL SECTION

ONSITE TRUCK PARKING LOTS

	STATION	TO	STATION
(NORTHBOUND)	194+90.00		206+27.17

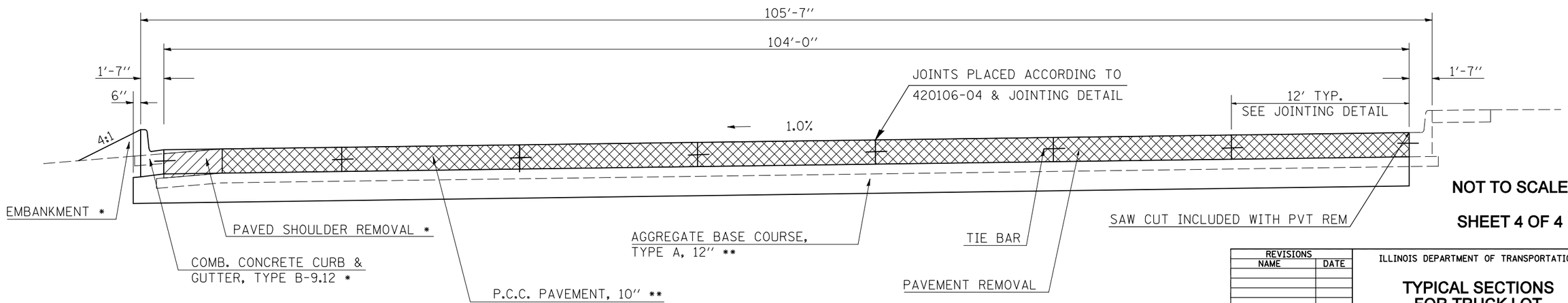

* NORTHBOUND & SOUTHBOUND REST AREAS
** NORTHBOUND REST AREA ONLY

NOT TO SCALE

SHEET 4 OF 4

REVISIONS	
NAME	DATE

ILLINOIS DEPARTMENT OF TRANSPORTATION

TYPICAL SECTIONS FOR TRUCK LOT PARKING

SCALE: VERT. HORIZ.

DATE

DRAWN BY

CHECKED BY

PLOT DATE = 12/4/2009
FILE NAME = c:\pw_work\PWIDOT\SHERERJN\d0143776\D570075-sht-typical.dgn
PLOT SCALE = 423529 ' / IN.
USER NAME = shererjn