CONTRACT NO. 70075

F.A.I. RTE.	SECTION	COUNTY	TOTAL SHEETS	SHEET NO.
57	(10-30)RA-I-2	CHAMPAIGN	119	8
STA.		TO STA.		
FED. ROAD DIST. NO.	ILLINOIS	FED. AID PROJECT		

EXISTING TYPICAL SECTION

ENTRANCE AND EXIT RAMPS

	STATION	TO	STATION
(NORTHBOUND)	187+62.32		195+00.00
(SOUTHBOUND)	127+35.05		130+83.06
(NORTHBOUND)	208+48.69		212+41.75
(SOUTHBOUND)	144+66.70		150+10.93

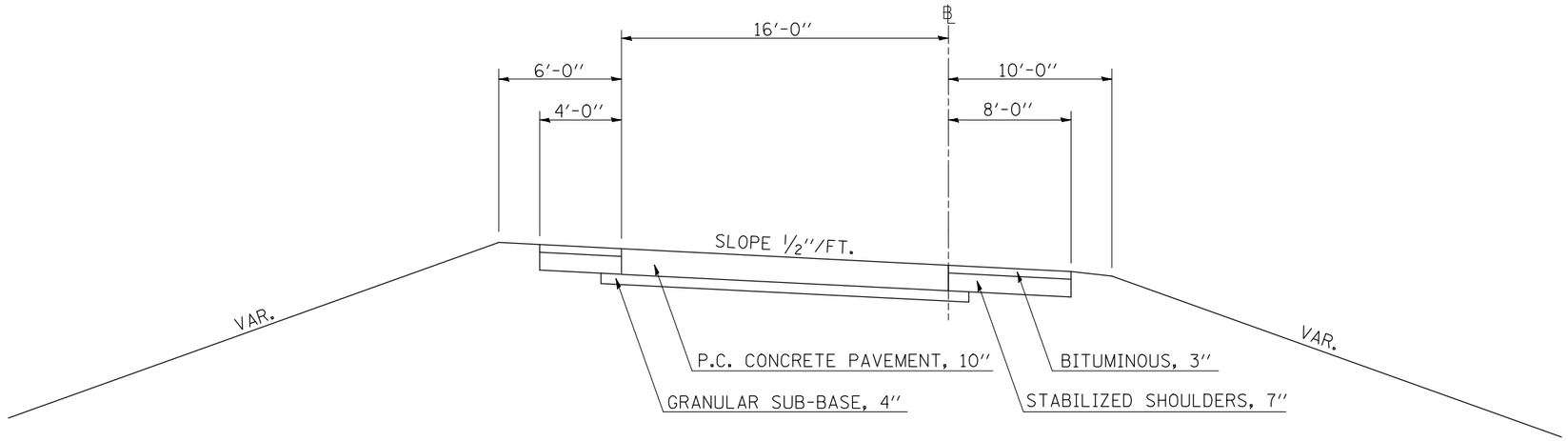

NOT TO SCALE

1. PROPOSED TYPICAL SECTION

ENTRANCE AND EXIT RAMPS

	STATION	TO	STATION
(NORTHBOUND)	187+62.32		195+00.00
(SOUTHBOUND)	127+35.05		130+83.06
(NORTHBOUND)	208+48.69		212+41.75
(SOUTHBOUND)	144+66.70		150+10.93

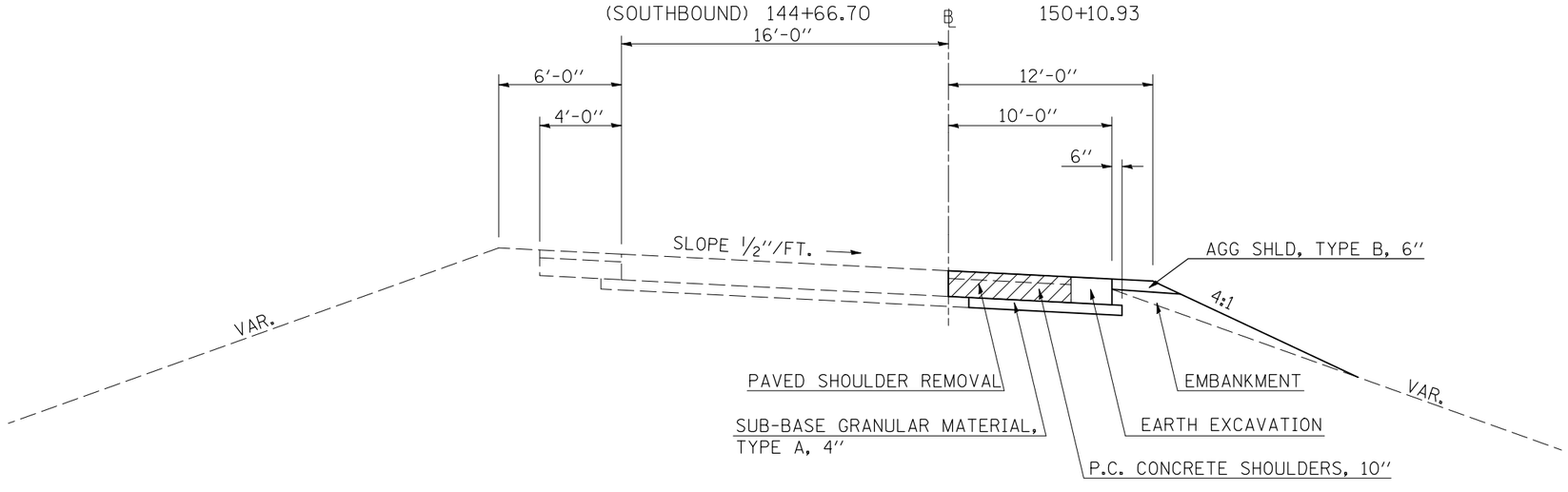

NOT TO SCALE

SHEET 1 OF 4

REVISIONS	
NAME	DATE

ILLINOIS DEPARTMENT OF TRANSPORTATION

TYPICAL SECTIONS FOR RAMPS

SCALE: VERT. HORIZ.

DATE

DRAWN BY

CHECKED BY

PLOT DATE = 12/4/2009
FILE NAME = c:\pw_work\PWIDOT\SHEREFJN\d0143776\D570075-sht-typical.dgn
PLOT SCALE = 42.3529 ' / IN.
USER NAME = sherefjn