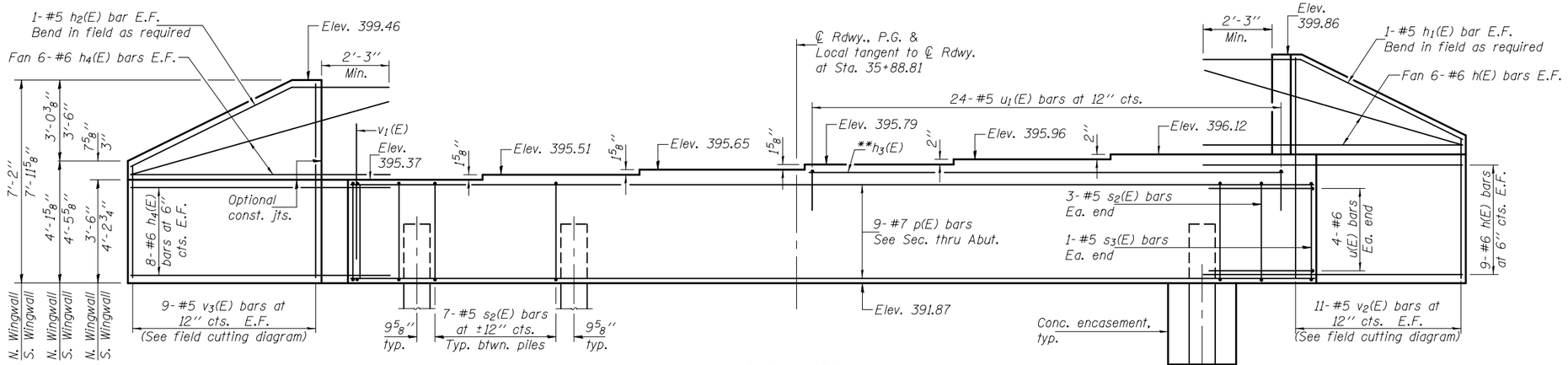

ELEVATION

(Looking east)

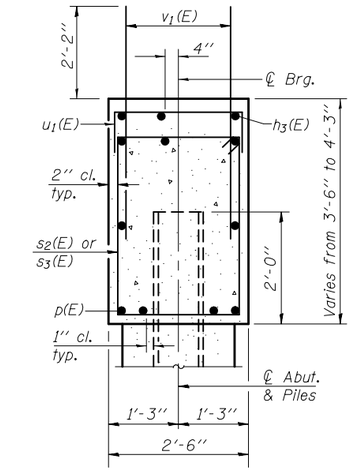

SEC. THRU ABUT.

PILE DATA

Type: Steel HP12x53
Nominal Required Bearing: 418 Kips
Allowable Resistance Available: 139 Kips
Est. Length: 45'
No. Production Piles: 5
No. Test Piles: 1

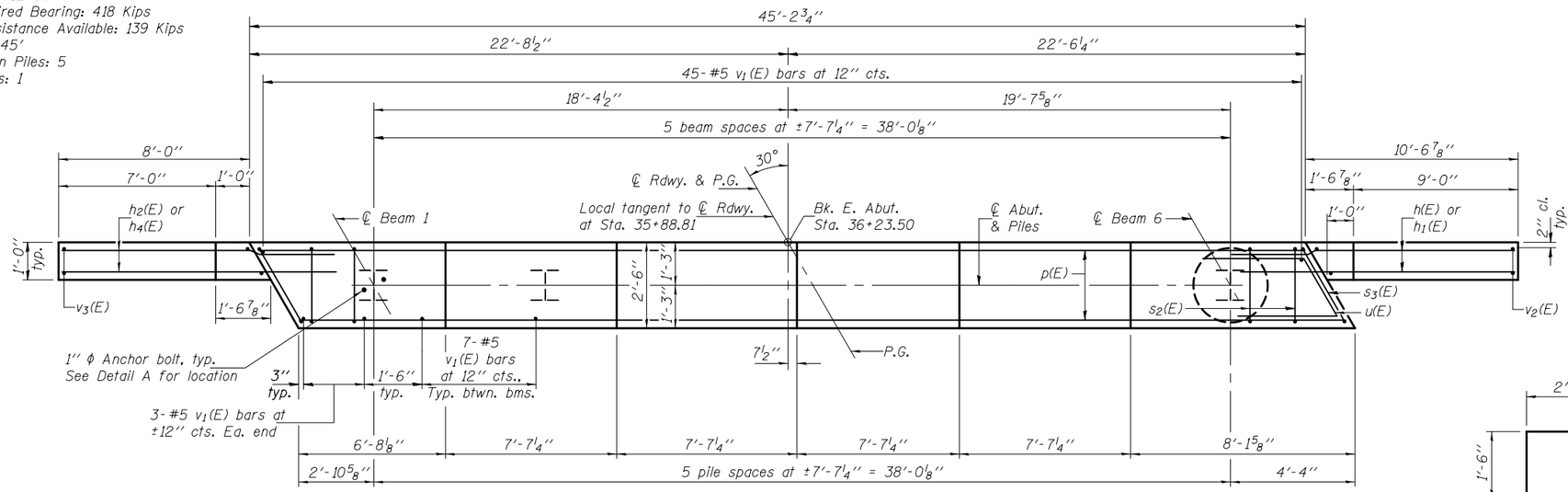

PLAN

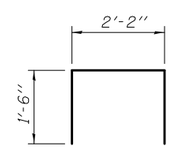

BAR u2(E)

BILL OF MATERIAL

Bar	No.	Size	Length	Shape
h(E)	30	#6	13'-4"	
h1(E)	2	#5	13'-4"	
h2(E)	2	#5	11'-4"	
h3(E)	3	#5	23'-0"	
h4(E)	28	#6	11'-0"	
p(E)	9	#7	44'-10"	
s2(E)	41	#5	11'-7"	
s3(E)	2	#5	12'-3"	
u(E)	8	#6	10'-2"	
u1(E)	24	#5	5'-2"	
v1(E)	86	#5	4'-4"	
v2(E)	11	#5	11'-8"	
v3(E)	9	#5	10'-7"	
Concrete Structures		Cu. Yd.	20.2	
Reinforcement Bars, Epoxy Coated		Pound	3410	
Structure Excavation		Cu. Yd.	93	
Furnishing Steel Piles HP12x53		Foot	225	
Driving Piles		Foot	225	
Test Pile Steel HP12x53		Each	1	
Concrete Encasement		Cu. Yd.	2.1	
Anchor Bolts, 1"		Each	12	

Notes:
Pour steps monolithically with cap.
Space reinforcement in cap to miss anchor bolts.
For details of piles and concrete encasement, see sheet 16 of 18.

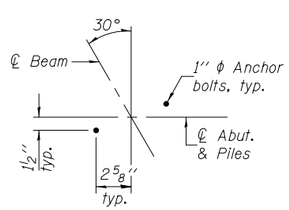

DETAIL "A"

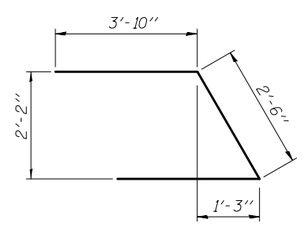

BAR u(E)

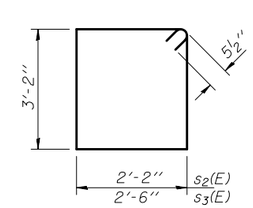

BARS s2(E) & s3(E)

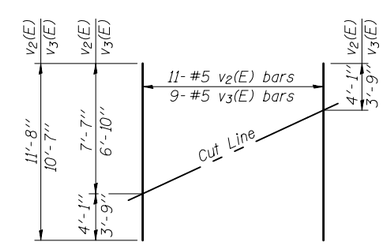

FIELD CUTTING DIAGRAM

Order v2(E) & v3(E) full length. Cut as shown and use remainder of bars in opposite face.

DESIGNED - Curt M. Evoy	EXAMINED	ACTING ENGINEER OF BRIDGE DESIGN	DATE - JANUARY 24, 2014	STATE OF ILLINOIS DEPARTMENT OF TRANSPORTATION	EAST ABUTMENT STRUCTURE NO. 100-0080	F.A.U. RTE. 9588	SECTION 39B-1
CHECKED - Philip Coppernoll						COUNTY WILLIAMSON	TOTAL SHEETS 224 / SHEET NO. 90
DRAWN - h.t. duong	PASSED	ACTING ENGINEER OF BRIDGES AND STRUCTURES	REVISED		SHEET NO. 15 OF 18 SHEETS	CONTRACT NO. 78277	
CHECKED - FT/GRA			REVISED			ILLINOIS FED. AID PROJECT	