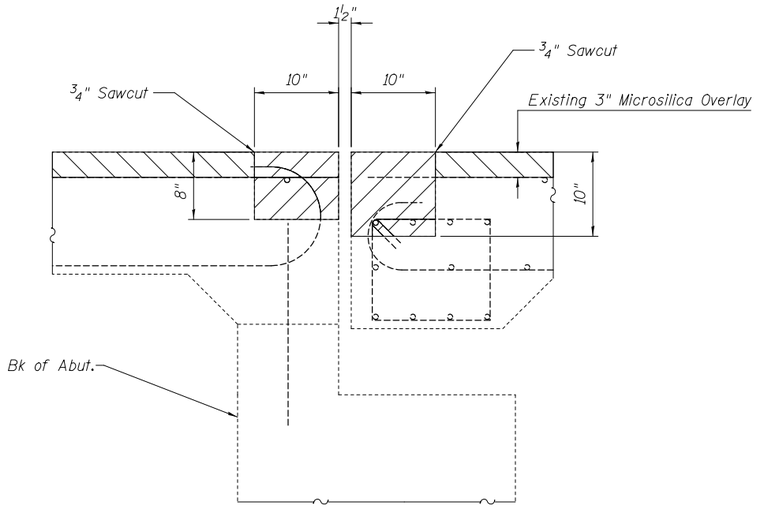

SECTION A-A

All dimensions are at right angles to jt.

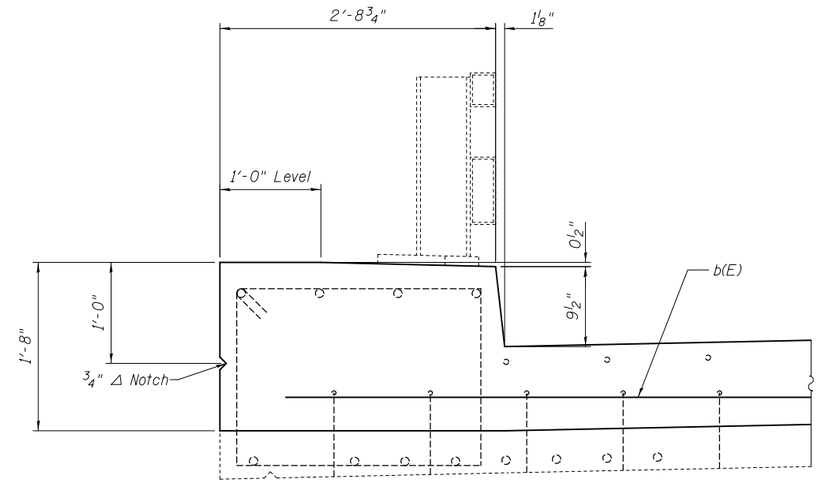

CURB SECTION (DECK)

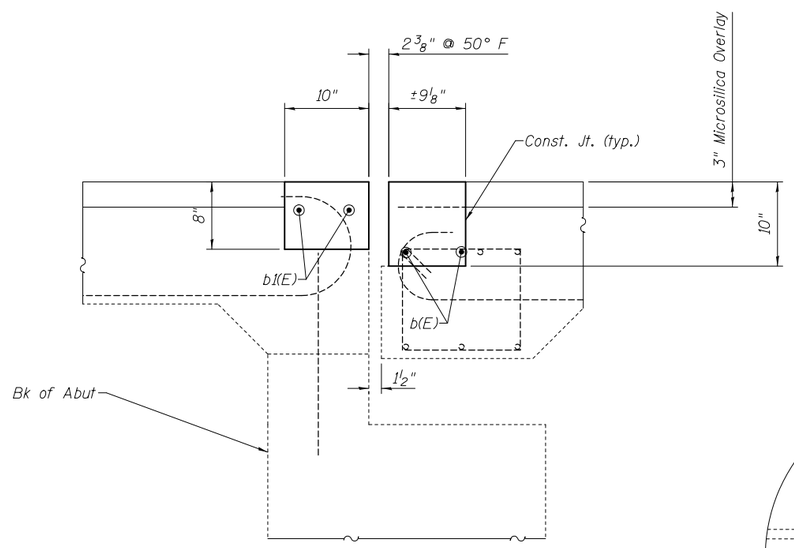

SECTION B-B

All dimensions are at right angles to jt.

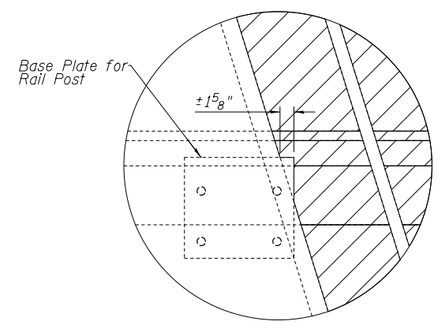

DETAIL "C"

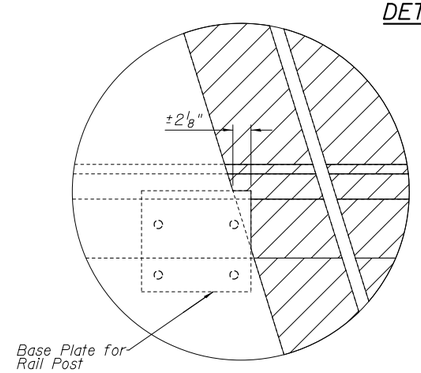

DETAIL "B"

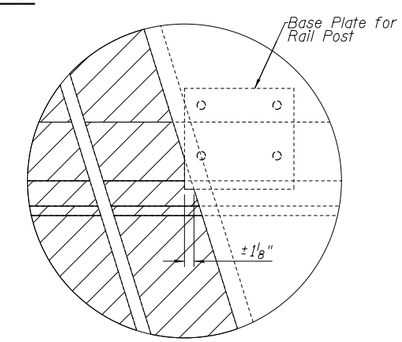

DETAIL "A"

BILL OF MATERIAL

Bar	No.	Size	Length	Shape
b(E)	8	#5	17'-11"	———
b1(E)	8	#5	16'-8"	———
Concrete Removal			Cu. Yd.	4.0
Concrete Superstructure			Cu. Yd.	3.8
Reinforcement Bars, Epoxy Coated			Lbs.	290

Reinforcement bars designated (E) shall be epoxy coated.

DESIGNED - AYV	EXAMINED	DATE -	
CHECKED -	ENGINEER OF STRUCTURAL SERVICES		
DRAWN - AYV	PASSED	REVISED	
CHECKED -	ENGINEER OF BRIDGES AND STRUCTURES	REVISED	

STATE OF ILLINOIS
DEPARTMENT OF TRANSPORTATION

JOINT DETAILS
SN 082-0037

SHEET NO. 6 OF 10 SHEETS

F.A.P. RTE.	SECTION	COUNTY	TOTAL SHEETS	SHEET NO.
327	3BR-1-I-1	ST. CLAIR	20	16

CONTRACT NO. 76G41

ILLINOIS FED. AID PROJECT