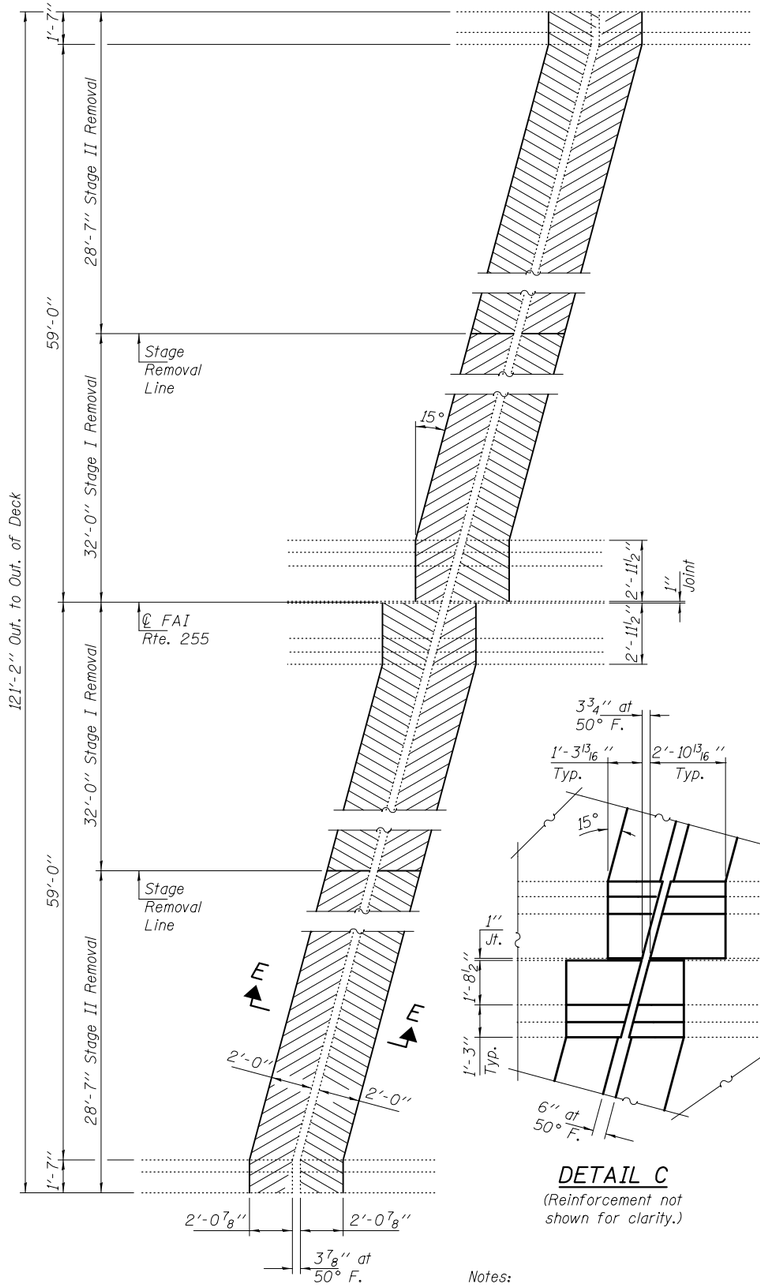

CONCRETE REMOVAL AT PIER 6

DETAIL C

(Reinforcement not shown for clarity.)

Notes:
Hatched areas indicate concrete removal.
For Reinforcement Details and Parapet Details see sheet 14 of 17.

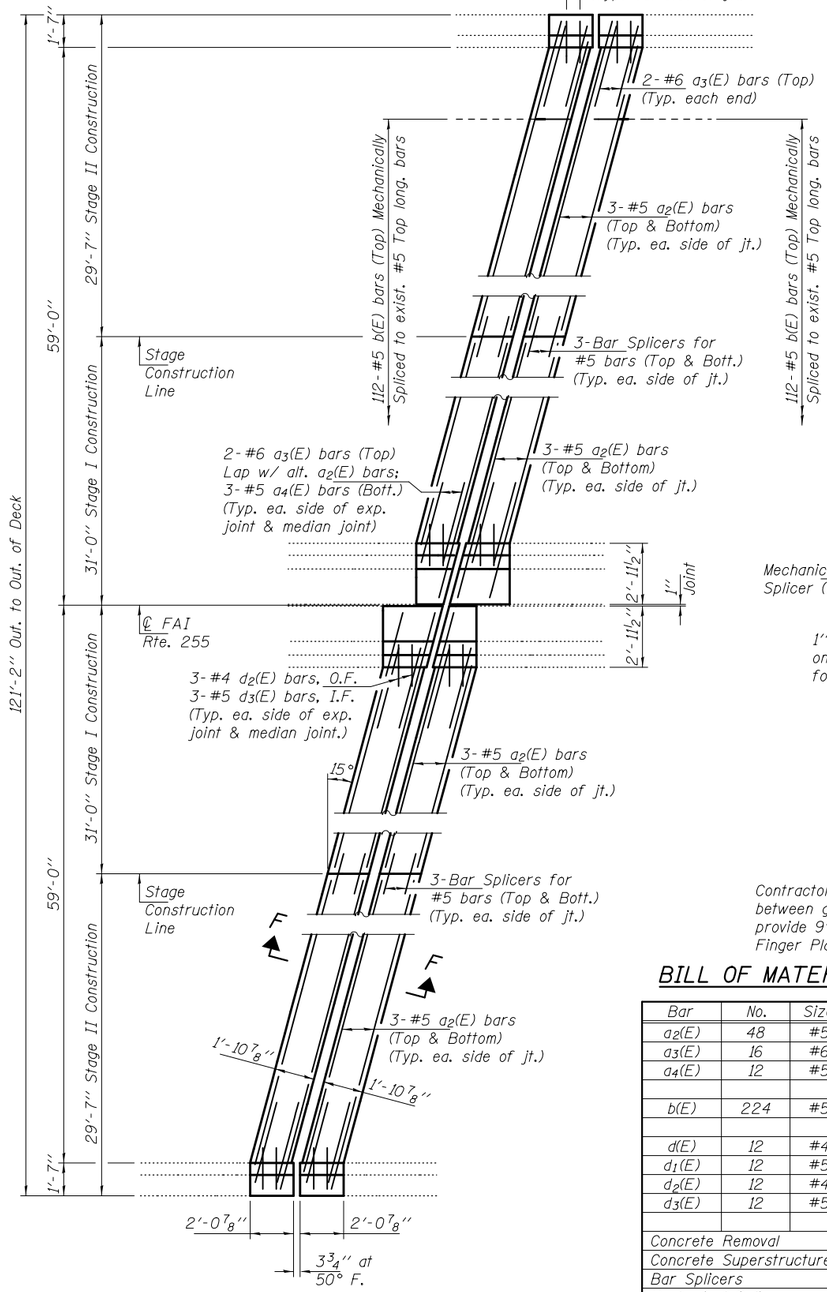

CONCRETE REPLACEMENT AT PIER 6

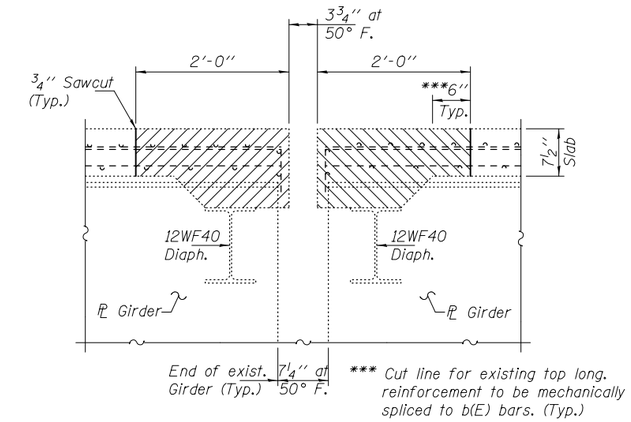

SECTION E-E

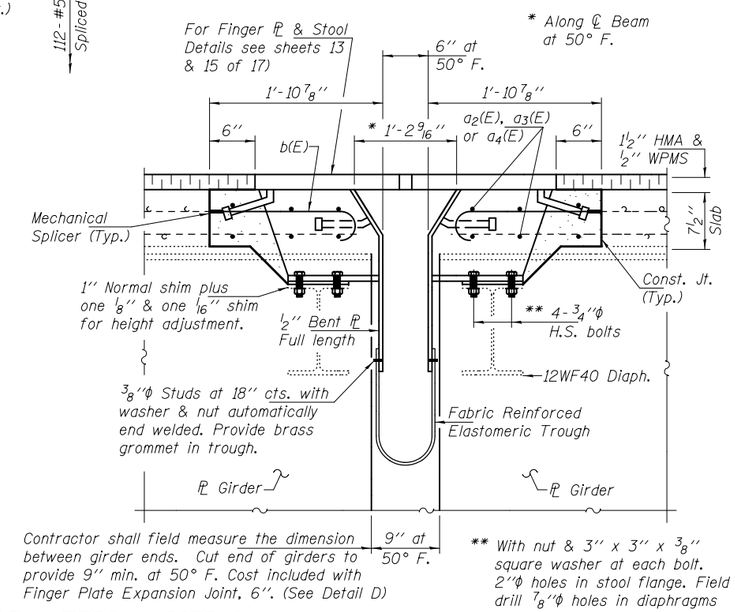

BILL OF MATERIAL (PIER 6)

Bar	No.	Size	Length	Shape
$a_2(E)$	48	#5	29'-6"	
$a_3(E)$	16	#6	4'-0"	
$a_4(E)$	12	#5	4'-0"	
b(E)	224	#5	1'-10"	
d(E)	12	#4	5'-7"	
$d_1(E)$	12	#5	3'-11"	
$d_2(E)$	12	#4	4'-4"	
$d_3(E)$	12	#5	3'-9"	
Concrete Removal			Cu. Yd.	24.2
Concrete Superstructure			Cu. Yd.	22.9
Bar Splicers			Each	24
Mechanical Splicers			Each	224
Finger ℄ Exp. Jt., 6"			Foot	116
Reinforcement Bars, Epoxy Coated			Pound	2230

SECTION F-F

For Trough Details see sheet 10 of 17.

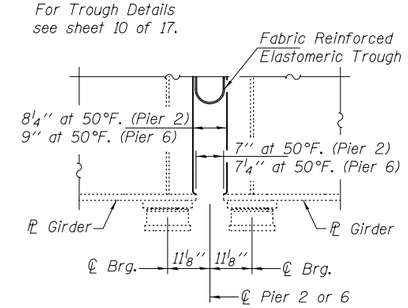

DETAIL D

DESIGNED	ATH	EXAMINED	Timothy A. Bright — ACTING ENGINEER OF STRUCTURAL SERVICES
CHECKED	VHV	PASSED	R. Carl Tracy — ACTING ENGINEER OF BRIDGES AND STRUCTURES
DRAWN	Steffen	DATE	JANUARY 22, 2014
CHECKED	ATH VHV	REVISED	
		REVISED	

STATE OF ILLINOIS
DEPARTMENT OF TRANSPORTATION

PIER 6 JOINT REMOVAL & REPLACEMENT
SN 082-0227

SHEET NO. 9 OF 17 SHEETS

F.A.I. RTE.	SECTION	COUNTY	TOTAL SHEETS	SHEET NO.
255	82-4HVB-I	ST. CLAIR	46	31

CONTRACT NO. 76D51

ILLINOIS FED. AID PROJECT