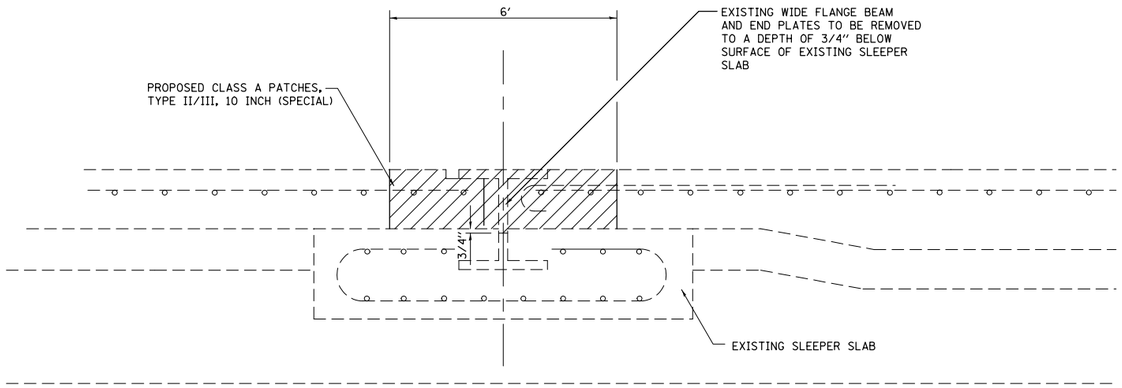

EXISTING WIDE FLANGE BEAM TERMINAL JOINT

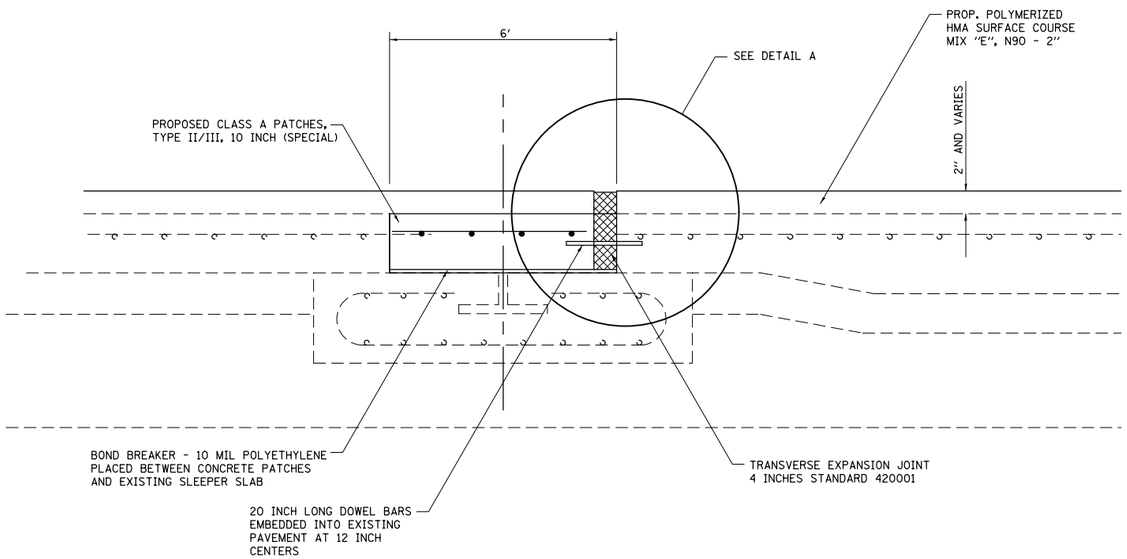

PROPOSED EXPANSION JOINT

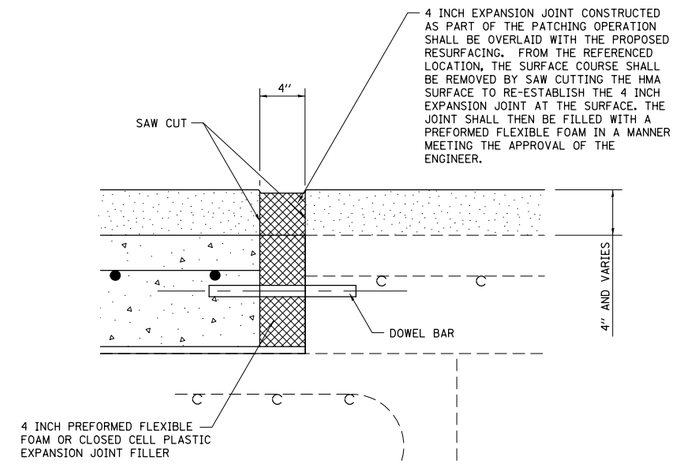

DETAIL A

LEGEND

REMOVAL ITEM

FILE NAME = $FILEL$	USER NAME = $USER$	DESIGNED -	REVISED -	STATE OF ILLINOIS DEPARTMENT OF TRANSPORTATION	DETAIL AT WIDE FLANGE BEAM JOINT	F.A.I RTE.	SECTION	COUNTY	TOTAL SHEETS	SHEET NO.
		DRAWN -	REVISED -			255	82-4HVB-I	ST. CLAIR	46	12
	PLOT SCALE = $SCALE$	CHECKED -	REVISED -					CONTRACT NO. 76D51		
	PLOT DATE = $DATE$	DATE -	REVISED -		SCALE: SHEET NO. 1 OF 1 SHEETS STA. TO STA.	FED. ROAD DIST. NO.	ILLINOIS	FED. AID PROJECT		