EXISTING TYPICAL CROSS SECTION

	STATION	TO	STATION
RAMP I-AD:	87+00.00		100+56.00

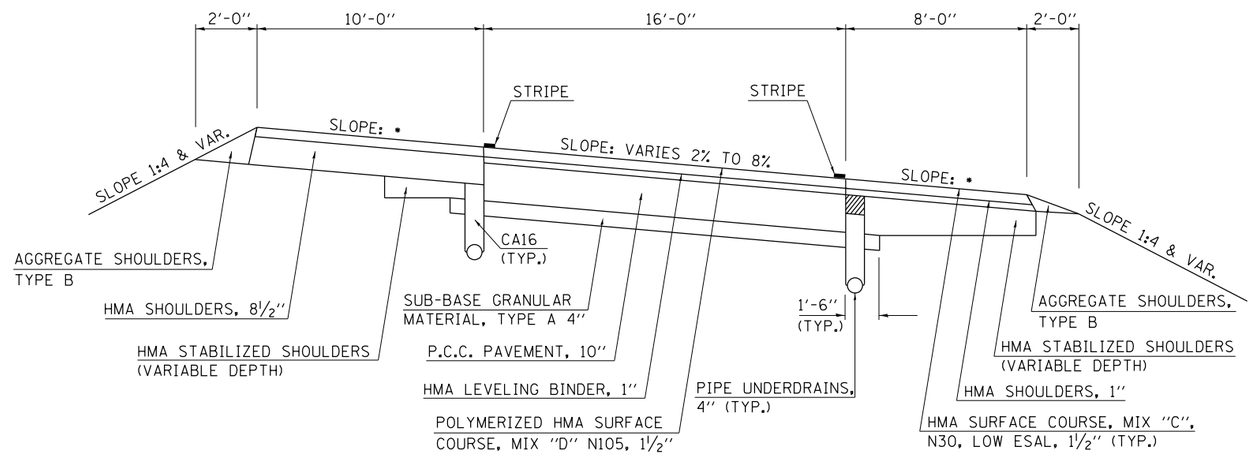

• NOTE:
THE ALGEBRAIC DIFFERENCE BETWEEN THE RAMP PAVEMENT AND SHOULDER SLOPE SHALL NOT BE GREATER THAN 8% IN FULL SUPERELEVATION.

PROPOSED TYPICAL CROSS SECTION

	STATION	TO	STATION
RAMP I-AD:	87+00.00		100+56.00

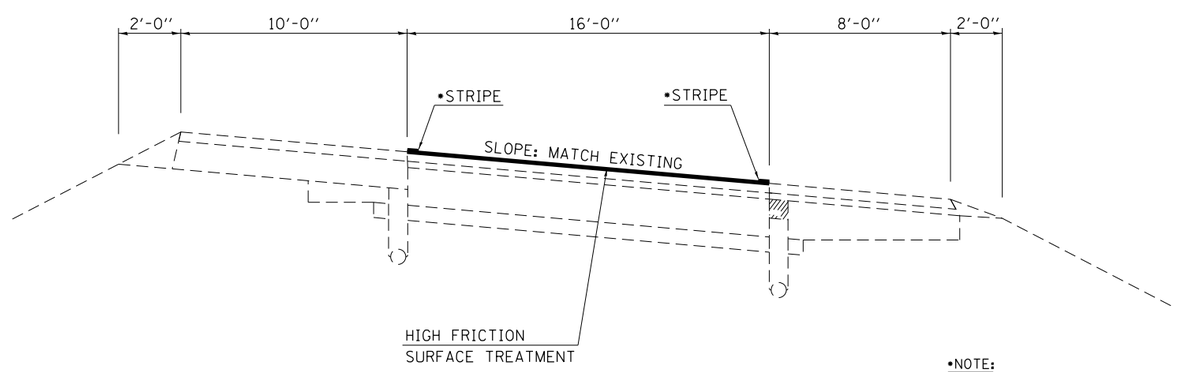

•NOTE:
STRIPE ALONG THE EDGE LINE SHALL BE OFFSET 2" FROM EDGE OF PAVEMENT.

FILE NAME = c:\pw_work\pwidot\eaglinga\d0363405\D570A52-sht-typical.dgn	USER NAME = eaglinga	DESIGNED - GAE	REVISED -	STATE OF ILLINOIS DEPARTMENT OF TRANSPORTATION	TYPICAL CROSS SECTIONS	F.A.I. RTE.	SECTION	COUNTY	TOTAL SHEETS	SHEET NO.
		DRAWN - GAE	REVISED -			57	HFSC 2014-1	CHAMPAIGN	31	5
	PLOT SCALE = 40.0000 ' / in.	CHECKED -	REVISED -					CONTRACT NO. 70A52		
$MODELNAME$	PLOT DATE = 12/6/2013	DATE -	REVISED -		SCALE: SHEET 2 OF 2 SHEETS STA. TO STA.		ILLINOIS FED. AID PROJECT			