NOTE: EXISTING CONCRETE MEDIAN SURFACE SHALL BE COMPLETELY REMOVED AND REPLACED WITH CONCRETE MEDIAN SURFACE, 5". SIDE CURB SHALL BE INCLUDED IN THE COST OF CONCRETE MEDIAN SURFACE, 5".

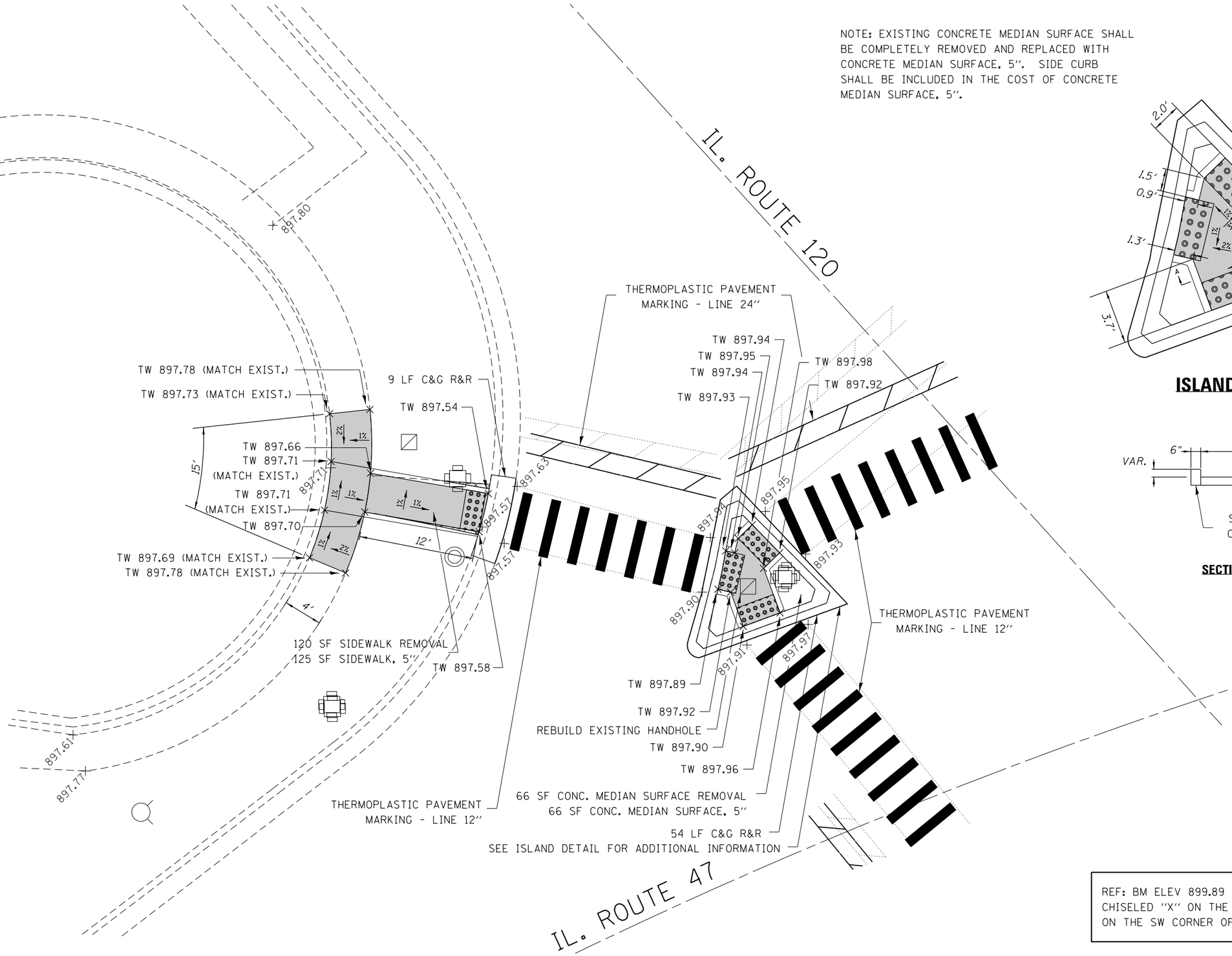

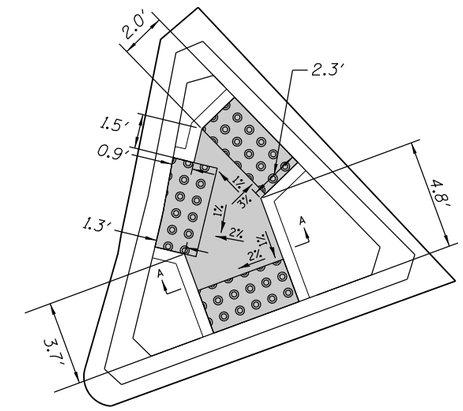

ISLAND DETAIL

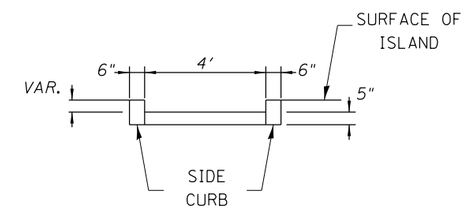

SECTION A–A

LEGEND

- DETECTABLE WARNINGS
- SIDEWALK REMOVAL
- CLASS D PATCH
- TW — TOP OF WALK PROPOSED ELEVATION

REF: BM ELEV 899.89
CHISELED "X" ON THE WESTERLY BOLT OF FIRE HYDRANT ON THE SW CORNER OF IL 47 AND IL 120

FILE NAME = c:\pw_work\pwidot\bilgramisa\d0362927\D107714-sht-Woodstock.dgn	USER NAME = Bilgramisa	DESIGNED -	REVISED -
		DRAWN -	REVISED -
	PLOT SCALE = 10.0000 ' / in.	CHECKED -	REVISED -
Default	PLOT DATE = 12/18/2013	DATE -	REVISED -

STATE OF ILLINOIS
DEPARTMENT OF TRANSPORTATION

ROADWAY PLAN – IL 47 (IL 120 TO IL 176)
IL 47 AT IL 120 (SOUTHWEST)

SCALE: 1:5 | SHEET OF SHEETS | STA. TO STA.

F.A. RTE.	SECTION	COUNTY	TOTAL SHEETS	SHEET NO.
VAR	2013-058I	McHENRY	58	48

CONTRACT NO. 60X36

ILLINOIS FED. AID PROJECT