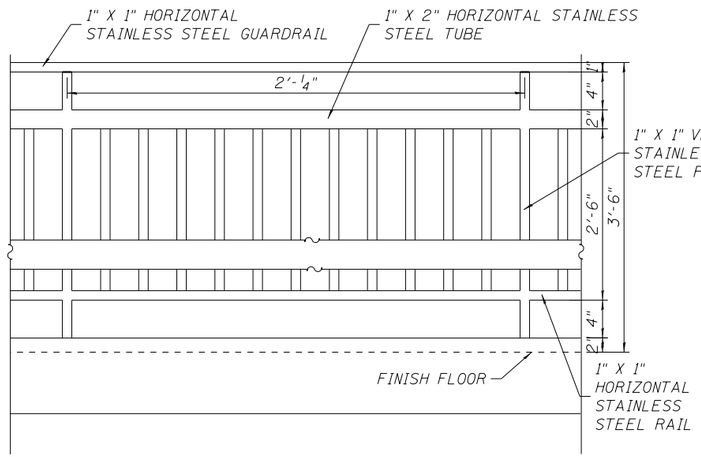

1 RAILING DETAILS
SCALE : 1 1/2" = 1'

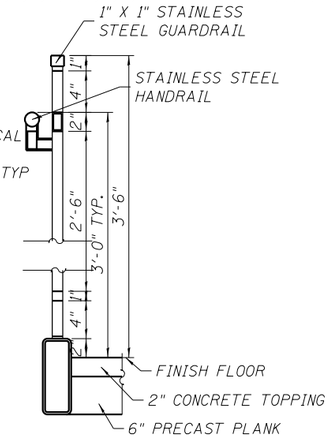

2 DETAILED PLATFORM RAILING
SCALE : 1 1/2" = 1'

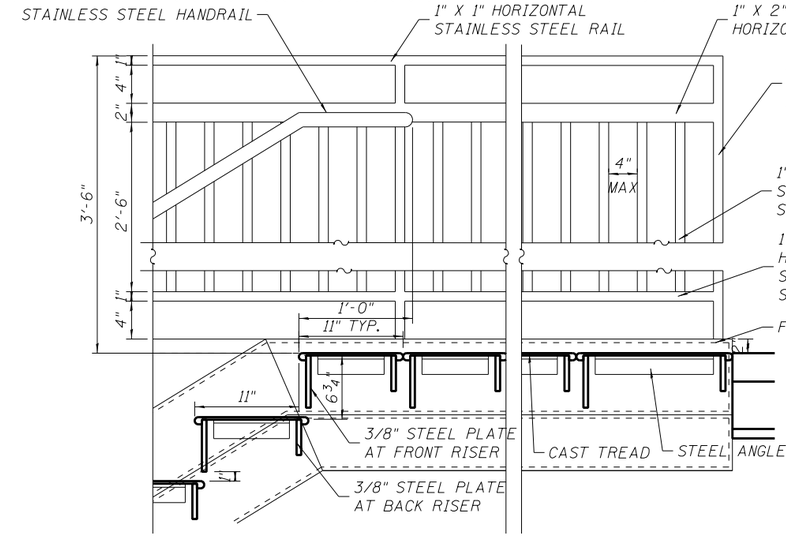

3 STANDARD TITLE TEXT AND LEVEL
SCALE : 1 1/2" = 1'

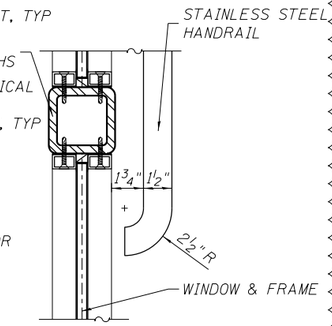

4 HANDRAIL RETURN
SCALE : 1" = 3'

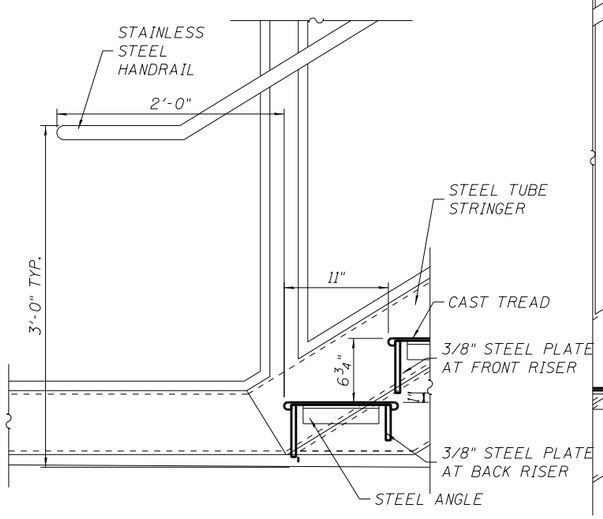

5 STANDARD TITLE TEXT AND LEVEL
SCALE : 1 1/2" = 1'

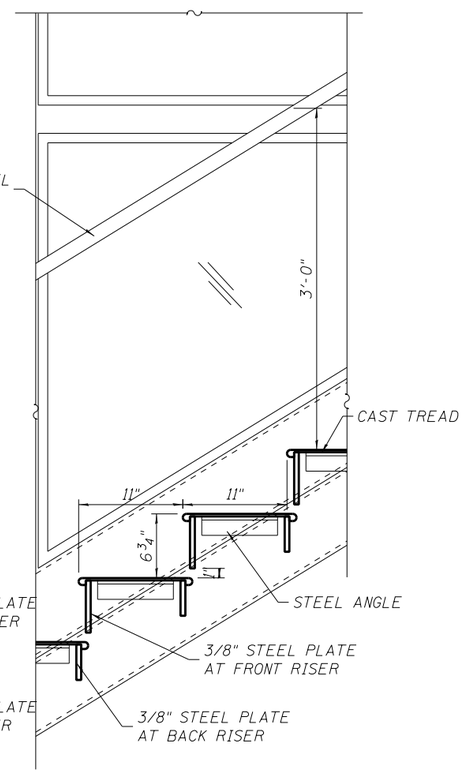

6 STANDARD TITLE TEXT AND LEVEL
SCALE : 1 1/2" = 1'

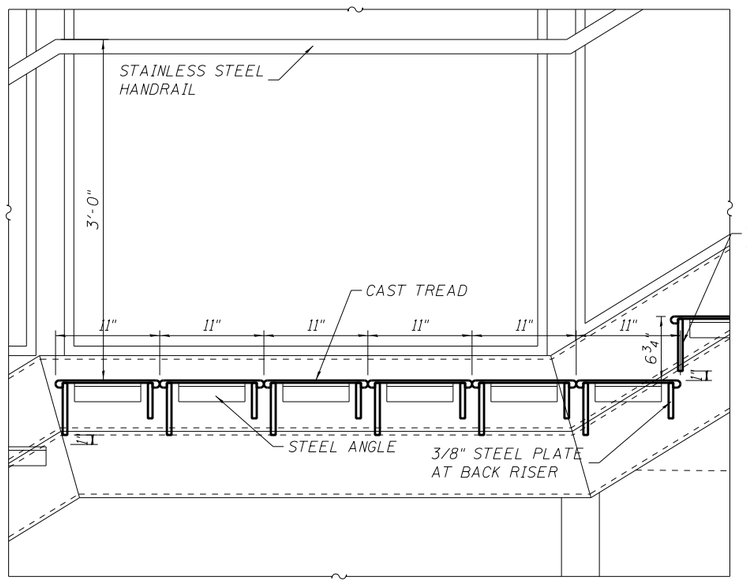

7 STANDARD TITLE TEXT AND LEVEL
SCALE : 1 1/2" = 1'

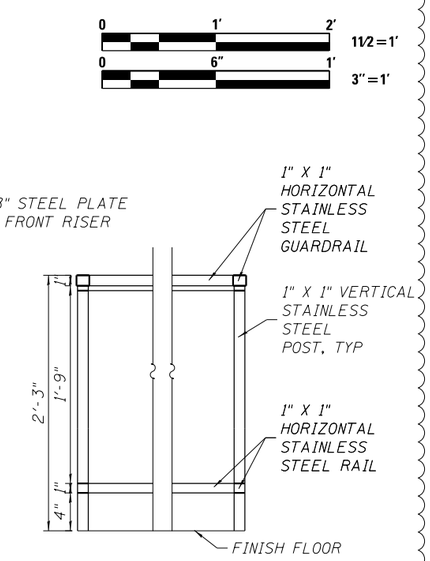

8 HANDRAIL RETURN
SCALE : 1 1/2" = 1'

A

4:32:05 PM
0161708-60W29-A-500.dgn

TranSystems

USER NAME = whbruce	DESIGNED - WHB	REVISED	A 1/20/2014
	CHECKED - CRR	REVISED	
PLOT SCALE = 0:8.0001 ':" / in.	DRAWN - WHB	REVISED	
PLOT DATE = 1/20/2014	CHECKED - CRR	REVISED	

STATE OF ILLINOIS
DEPARTMENT OF TRANSPORTATION

PEORIA STREET STATION
WEST STAIR DETAILS

SHEET NO. A-500 OF 117 SHEETS

MUN	SECTION	COUNTY	TOTAL SHEETS	SHEET NO.
2090	2013-011R	COOK	356	242

CONTRACT NO. 60W29

ILLINOIS FED. AID PROJECT FED. AID PROJECT