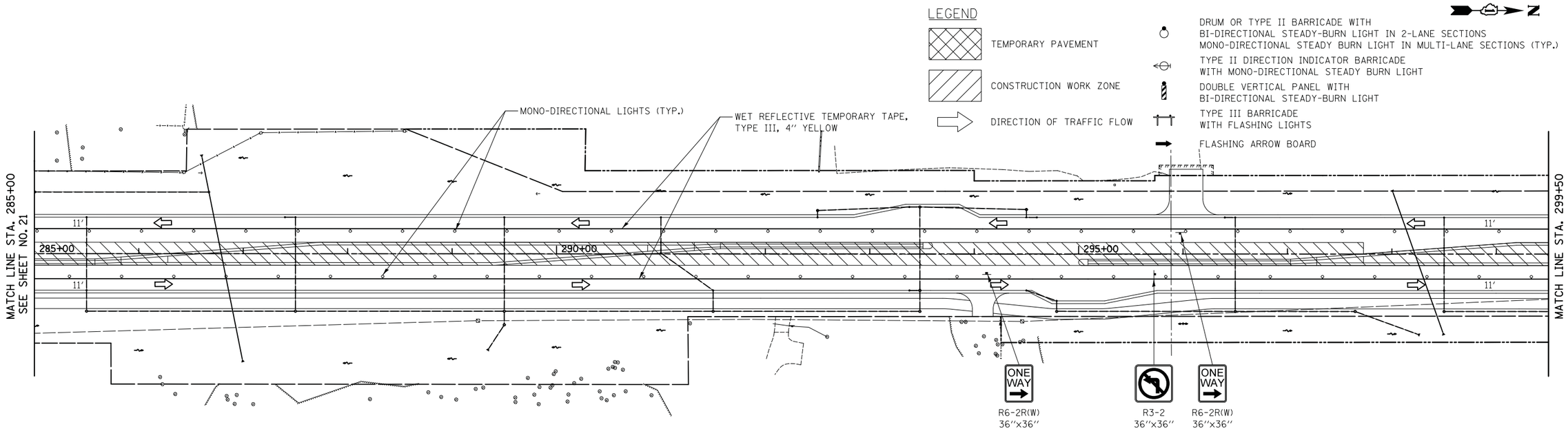

ILLINOIS ROUTE 31

NOTES:
1. DRUMS OR TYPE II BARRICADES SHALL BE SPACED AT 50' C-C IN TANGENTS, 20' C-C IN TAPERS, AND 10' C-C IN RADII.

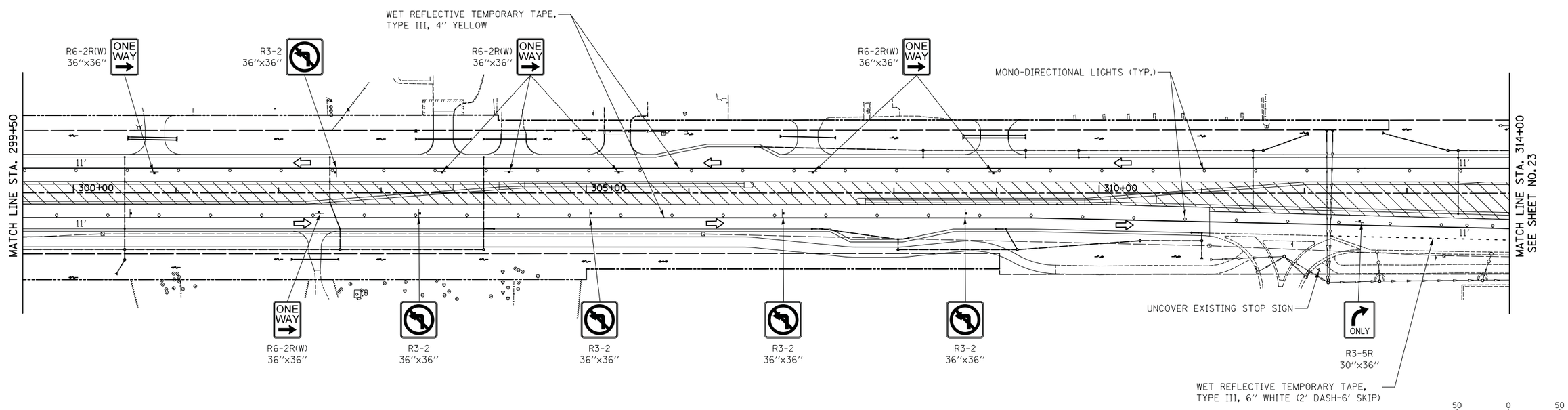

ILLINOIS ROUTE 31

FILE NAME = ...\06-MOT\2278NG_MOT_S3_02.dgn	USER NAME = kwh	DESIGNED - KWH	REVISED -	STATE OF ILLINOIS DEPARTMENT OF TRANSPORTATION	MAINTENANCE OF TRAFFIC – STAGE 3A & B	F.A.P RTE.	SECTION	COUNTY	TOTAL SHEETS / SHEET NO.
		DRAWN - PML	REVISED -			3887	18W&RS-5 (12)	MCHENRY	151 / 31
	PLOT SCALE = 50.0000 ' / in.	CHECKED - GAB	REVISED -					CONTRACT NO. 60V72	
	PLOT DATE = 12/17/2013	DATE - 12/17/2013	REVISED -		SCALE: 1" = 50' / SHEET NO. 12 OF 13 SHEETS / STA. 285+00 TO STA. 314+00	FED. ROAD DIST. NO. 1	ILLINOIS	FED. AID PROJECT	