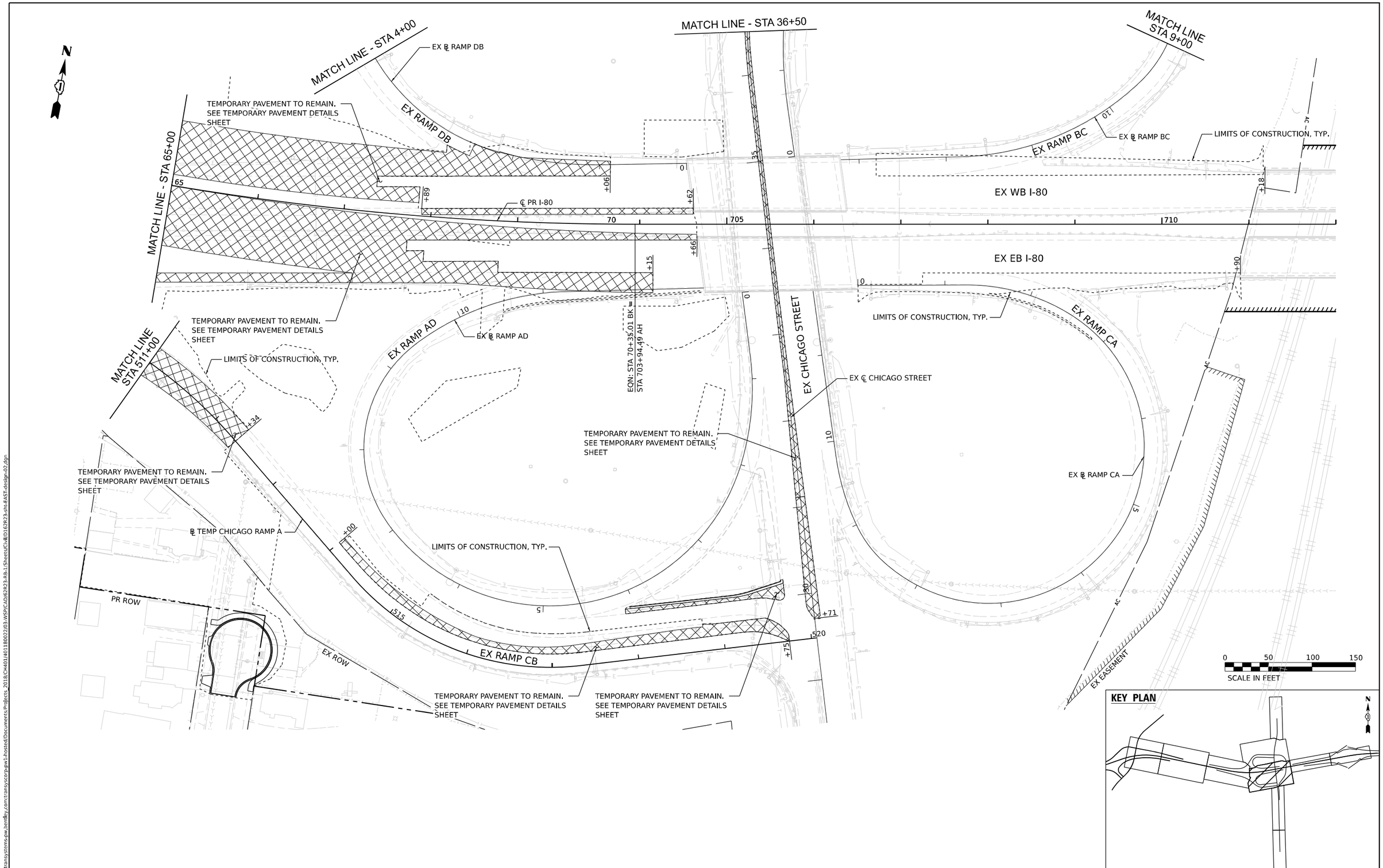

MODEL: Default
FILE NAME: pw://transystems-pw.bentley.com:transyscorp-pw1-hosted/Documents/Projects_2018/CH401/401180022/03-WSP/CAD/62R23-RB-1/Sheets/CwlID162R23-ih-EAST-design-02.dgn

BURNS McDONNELL	USER NAME = USGP718052	DESIGNED - JAP	REVISED -	STATE OF ILLINOIS DEPARTMENT OF TRANSPORTATION	PROPOSED ROADWAY PLAN I-80
		DRAWN - TMM	REVISED -		
	PLOT SCALE = 100.000 ' / in.	CHECKED - JIR	REVISED -		
	PLOT DATE = 11/5/2025	DATE - 11/7/2025	REVISED -		SCALE: 1" = 50' SHEET 3 OF 5 SHEETS STA. TO STA.

F.A.I. RTE.	SECTION	COUNTY	TOTAL SHEETS	SHEET NO.
80	FAI 80 21 STRUCTURE 2	WILL	1230	101
		CONTRACT NO. 62R23		
		ILLINOIS	FED. AID PROJECT	

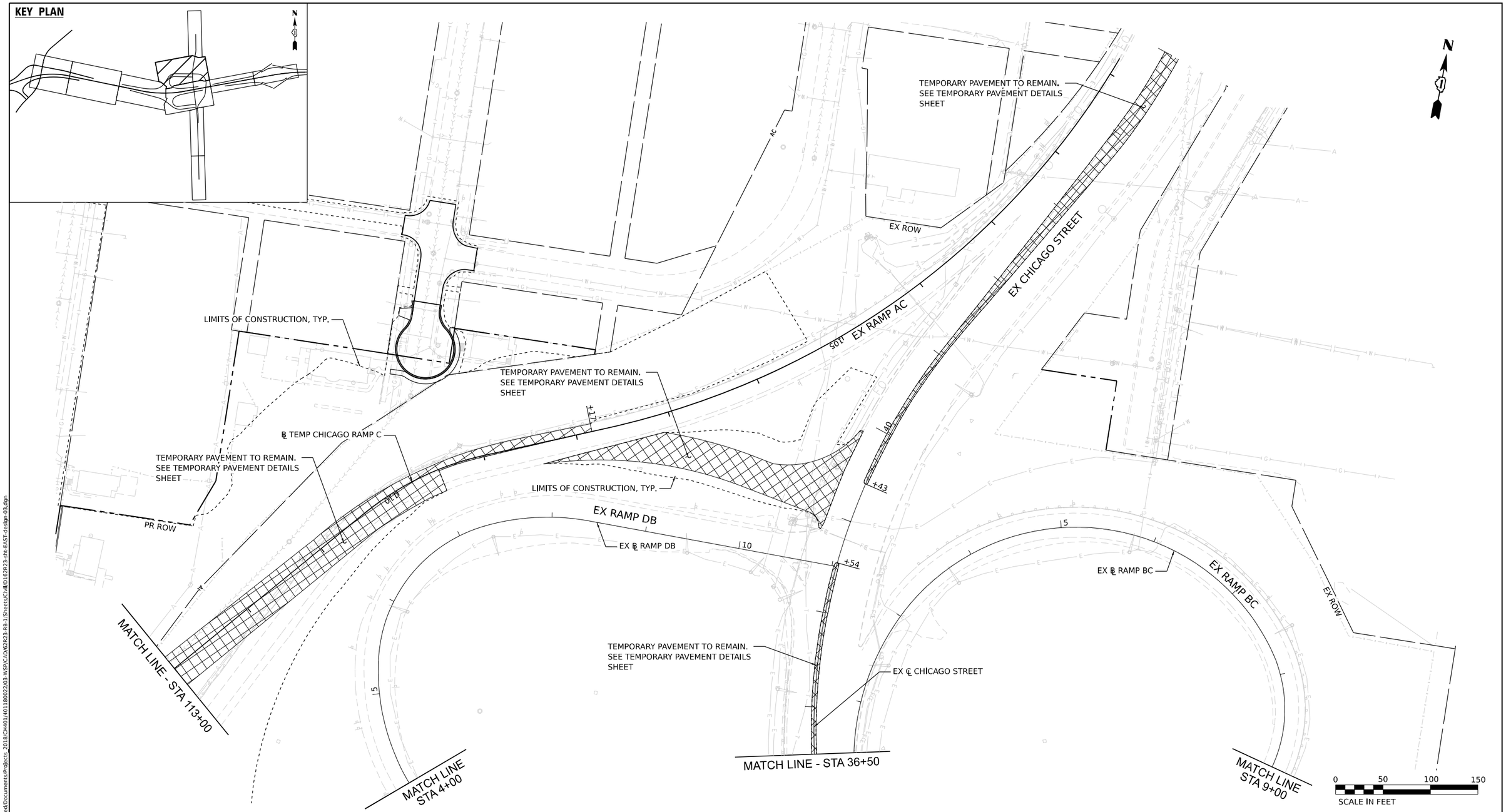

MODEL: Default
FILE NAME: pw://transystems-pw.bentley.com:transyscorp-pw1-hosted/Documents/Projects_2018/CH401/401180022/03-WSP/CAD/62R23-RB-1/Sheets/Civil/D162R23-sht-EAST-design-03.dgn

BURNS McDONNELL

USER NAME = USGP718052	DESIGNED - JAP	REVISED -	
	DRAWN - TMM	REVISED -	
PLOT SCALE = 100.000 ' / in.	CHECKED - JIR	REVISED -	
PLOT DATE = 11/5/2025	DATE - 11/7/2025	REVISED -	

STATE OF ILLINOIS
DEPARTMENT OF TRANSPORTATION

PROPOSED ROADWAY PLAN
I–80

SCALE: 1" = 50' | SHEET 4 OF 5 SHEETS | STA. TO STA.

F.A.I. RTE.	SECTION	COUNTY	TOTAL SHEETS	SHEET NO.
80	FAI 80 21 STRUCTURE 2	WILL	1230	102
		CONTRACT NO. 62R23		
	ILLINOIS	FED. AID PROJECT		

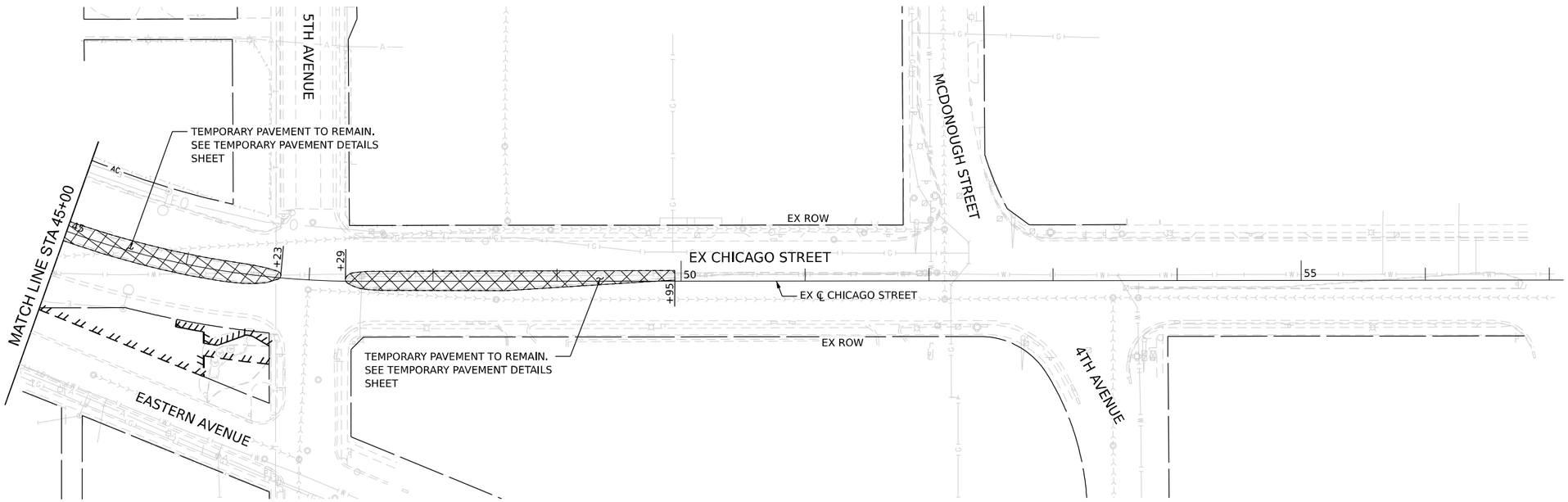

0 50 100 150
SCALE IN FEET

KEY PLAN

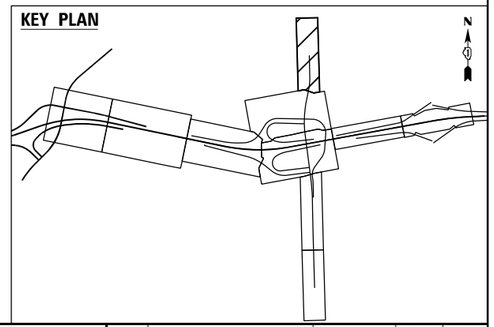

MODEL: Default
FILE NAME: pw://transystems-pw.bentley.com:transyscorp-pw1-hosted/Documents/Projects_2018/CH401/401180022/03-WSP/CAD/62R23-RB-1/Sheets/Civil/D162R23-sht-EAST-design-04.dgn

BURNS McDONNELL	USER NAME = USGP718052	DESIGNED - JAP	REVISED -
		DRAWN - TMM	REVISED -
	PLOT SCALE = 100.000 ' / in.	CHECKED - JIR	REVISED -
	PLOT DATE = 11/5/2025	DATE - 11/7/2025	REVISED -

STATE OF ILLINOIS
DEPARTMENT OF TRANSPORTATION

PROPOSED ROADWAY PLAN
I–80

SCALE: 1" = 50' | SHEET 5 OF 5 SHEETS | STA. TO STA.

F.A.I. RTE.	SECTION	COUNTY	TOTAL SHEETS	SHEET NO.
80	FAI 80 21 STRUCTURE 2	WILL	1230	103
		CONTRACT NO. 62R23		
	ILLINOIS	FED. AID PROJECT		

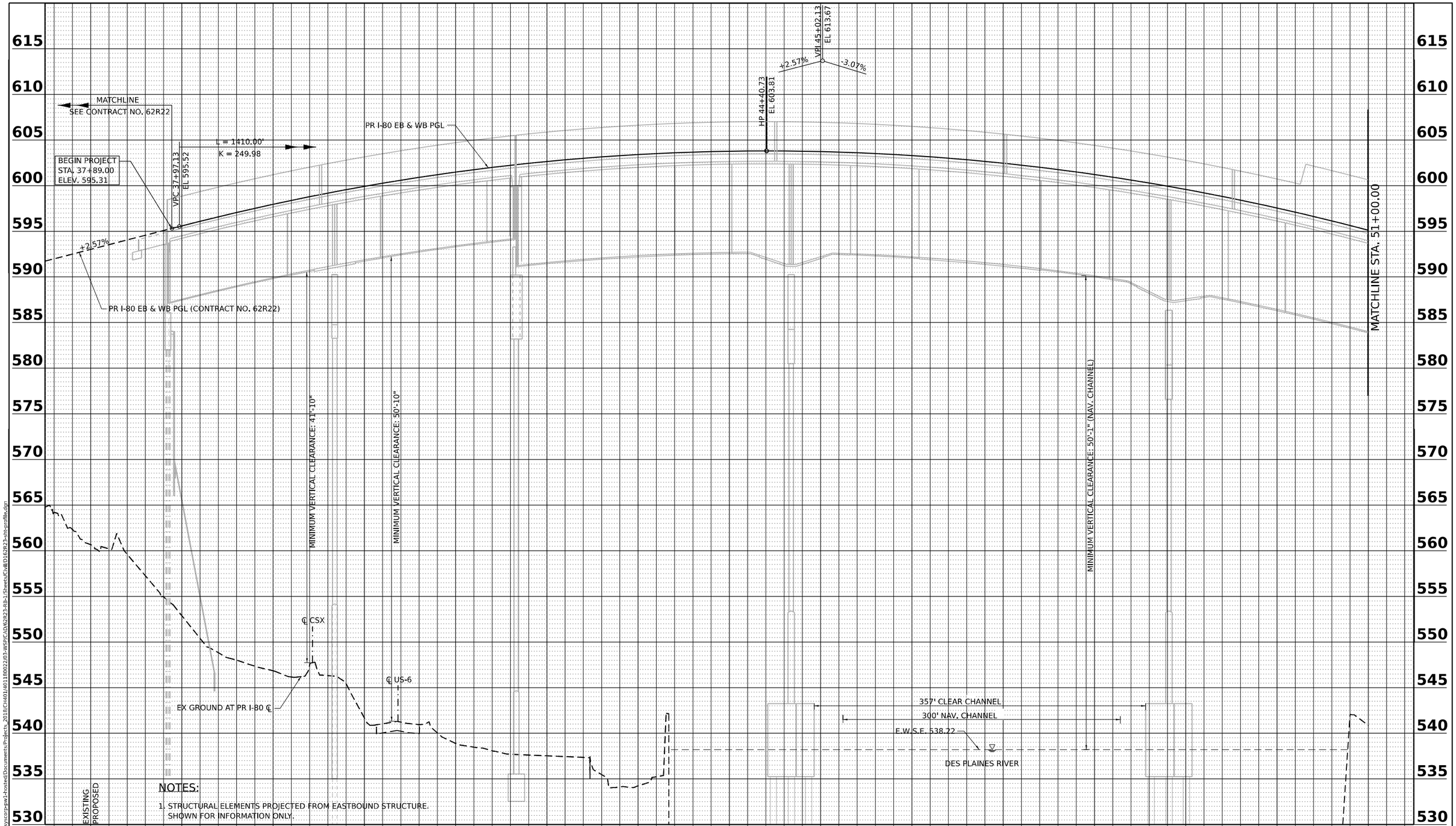

NOTES:

1. STRUCTURAL ELEMENTS PROJECTED FROM EASTBOUND STRUCTURE. SHOWN FOR INFORMATION ONLY.

PLAN		BY	DATE
NOTE BOOK NO.____	SURVEYED		
	PLOTTED		
	ALIGNMENT CHECKED		
	RT. OF WAY CHECKED		
	CADD FILE NAME		

PROFILE		BY	DATE
NOTE BOOK NO.____	SURVEYED		
	PLOTTED		
	GRADES CHECKED		
	B.M. NOTED		
	STRUCTURE NOTATNS CHKD		

MODEL: PR-I80-NORTH-3 - Update(-1 [Sheet]
FILE NAME: pw://transystems-pw.bentley.com:transyscorp-pw1-hosted/Documents/Projects_2018/CH401/401180022/03-WSP/CAD/R62R23-RB-1/Sheets/Cvld/D162R23-sht-profile.dgn

WSP USA Inc.
30 N. LASALLE STREET
SUITE 4200
CHICAGO, IL 60602
TEL: (312) 782-8150

USER NAME = USGP718052	DESIGNED - KSD	REVISED -
	DRAWN - KSD	REVISED -
PLOT SCALE = 0.16666667 ' / in.	CHECKED - MA	REVISED -
PLOT DATE = 11/5/2025	DATE - 11/7/2025	REVISED -

STATE OF ILLINOIS
DEPARTMENT OF TRANSPORTATION

PROPOSED ROADWAY PROFILE
I-80

SCALE: HORIZ: 1"=50' VERT: 1"=5' | SHEET 1 OF 2 SHEETS | STA. TO STA.

F.A.I. RTE.	SECTION	COUNTY	TOTAL SHEETS	SHEET NO.
80	FAI 80 21 STRUCTURE 2	WILL	1230	104
		CONTRACT NO. 62R23		
		ILLINOIS	FED. AID PROJECT	

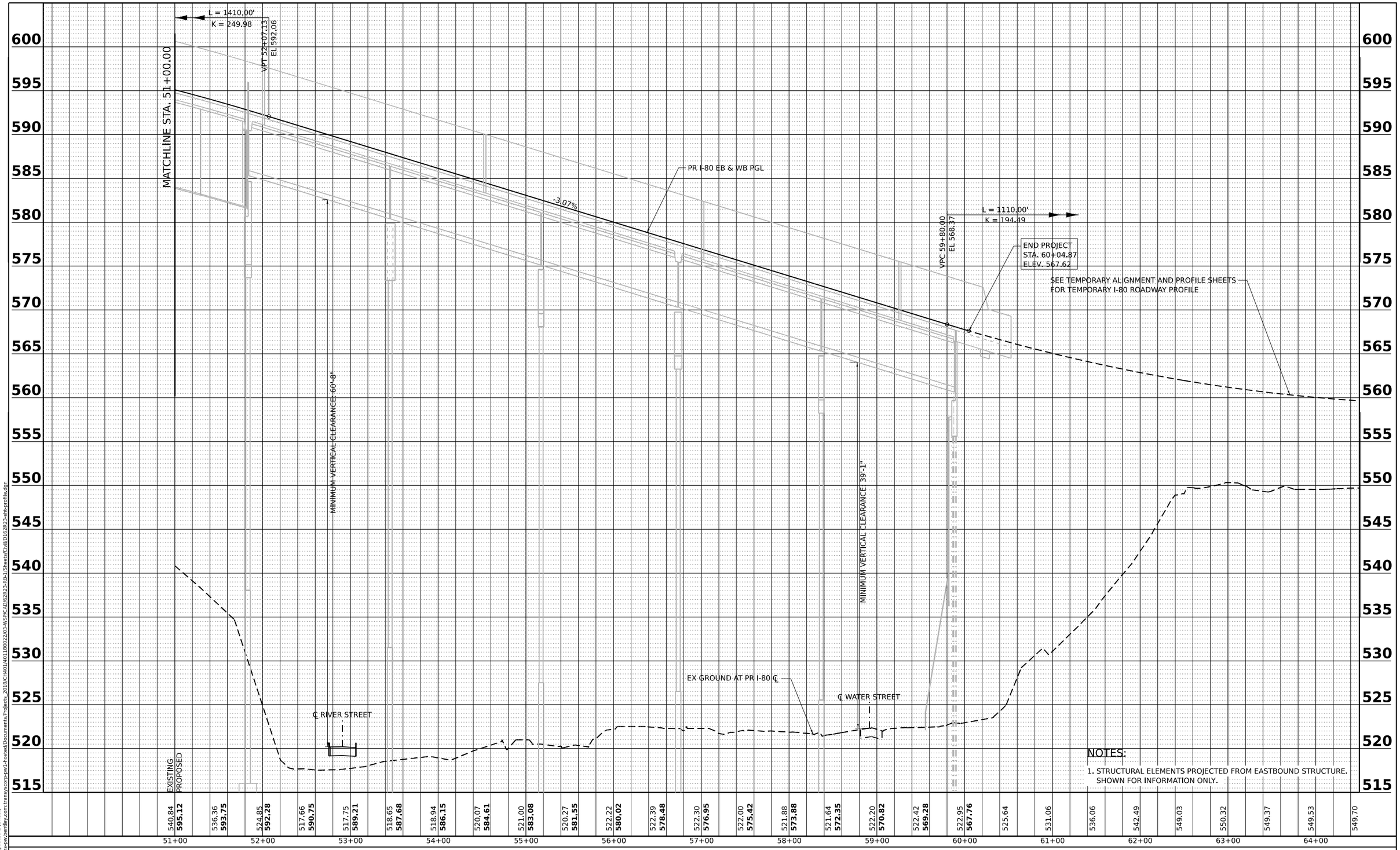

PLAN		BY	DATE
	SURVEYED		
	PLOTTED		
	ALIGNMENT CHECKED		
NOTE BOOK	RT. OF WAY CHECKED		
NO.	CADD FILE NAME		

PROFILE		BY	DATE
	SURVEYED		
	PLOTTED		
	GRADES CHECKED		
NOTE BOOK	BLR. NOTED		
NO.	STRUCTURE NOTATNS CHKD		

MODEL: PR-I80-NORTH-4 - Updated-2 [Sheet]
FILE NAME: pw://transystems-pw.bentley.com:transyscorp-pw1-hosted/Documents/Projects_2018/CH401/401180022/03-WSP/CAD/R2R23-RB-1/Sheets/Civil/D162R23-sht-profile.dgn

WSP USA Inc.
30 N. LASALLE STREET
SUITE 4200
CHICAGO, IL 60602
TEL: (312) 782-8150

USER NAME = USGP718052	DESIGNED - KSD	REVISED -	
	DRAWN - KSD	REVISED -	
PLOT SCALE = 0.16666667 ' / in.	CHECKED - MA	REVISED -	
PLOT DATE = 11/5/2025	DATE - 11/7/2025	REVISED -	

STATE OF ILLINOIS
DEPARTMENT OF TRANSPORTATION

PROPOSED ROADWAY PROFILE
I-80

SCALE: HORIZ: 1"=50' VERT: 1"=5' | SHEET 2 OF 2 SHEETS | STA. TO STA.

F.A.I. RTE.	SECTION	COUNTY	TOTAL SHEETS	SHEET NO.
80	FAI 80 21 STRUCTURE 2	WILL	1230	105
		CONTRACT NO. 62R23		
		ILLINOIS	FED. AID PROJECT	

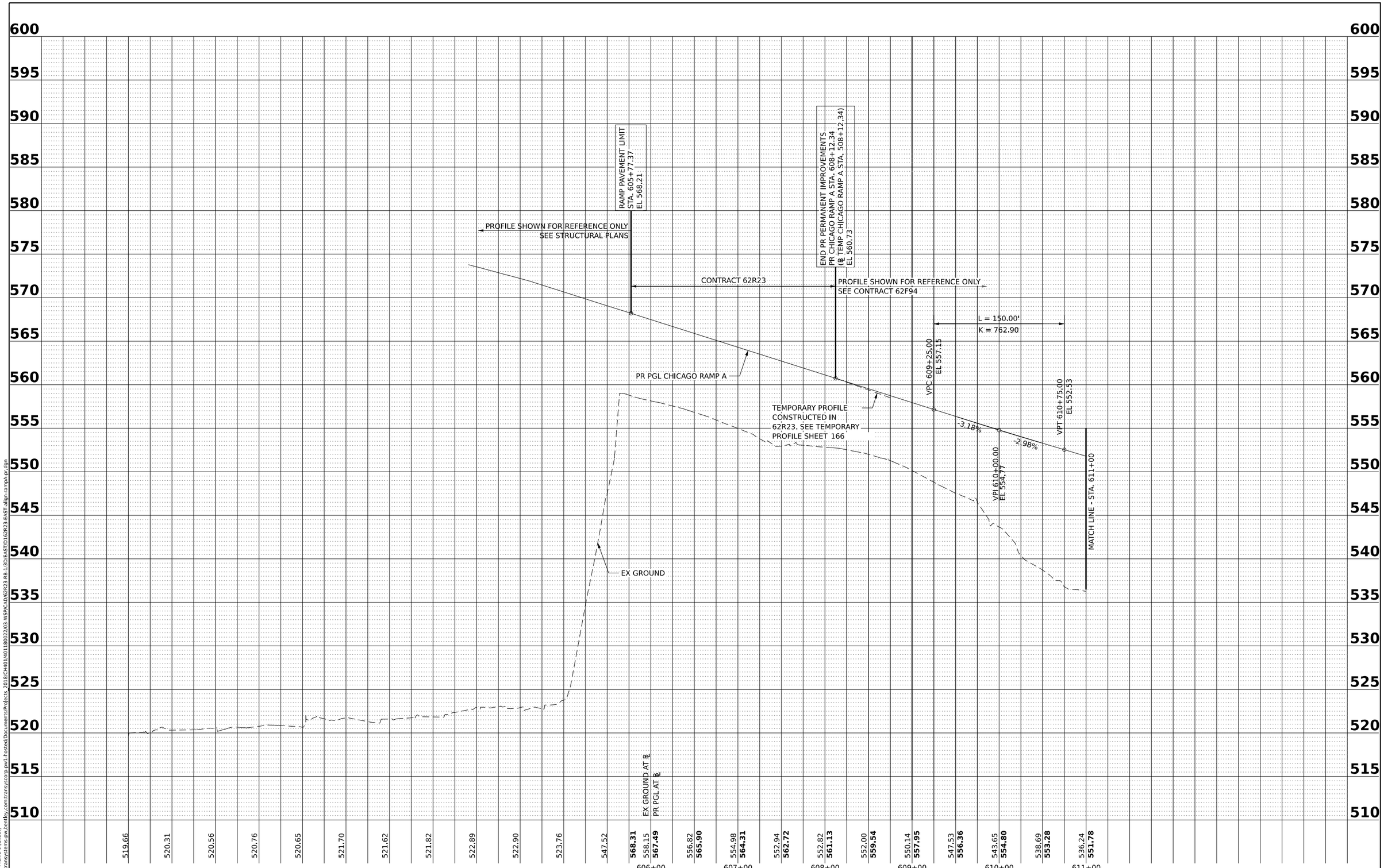

MODEL: Ramp A - Profile 1 [Sheet]
FILE NAME: pw://transystems-pw.bentley.com:transyscorp-pw1-hosted/Documents/Projects_2018/CH401/401180022/03-WSP/CAD/62R23-RB-1/3D/EAST/D162R23-EAST-align-rampA-pr.dgn

BURNS McDONNELL

USER NAME = USGP718052	DESIGNED - JAP	REVISED -	
	DRAWN - TMM	REVISED -	
PLOT SCALE = 0.16666667 ' / in.	CHECKED - JIR	REVISED -	
PLOT DATE = 11/5/2025	DATE - 11/7/2025	REVISED -	

STATE OF ILLINOIS
DEPARTMENT OF TRANSPORTATION

ROADWAY PROFILE
CHICAGO STREET RAMP A

SCALE: 50H:5V | SHEET 1 OF 2 SHEETS | STA. 599+00 TO STA. 610+50

F.A.I. RTE.	SECTION	COUNTY	TOTAL SHEETS	SHEET NO.
80	FAI 80 21 STRUCTURE 2	WILL	1230	106
		CONTRACT NO. 62R23		
		ILLINOIS	FED. AID PROJECT	

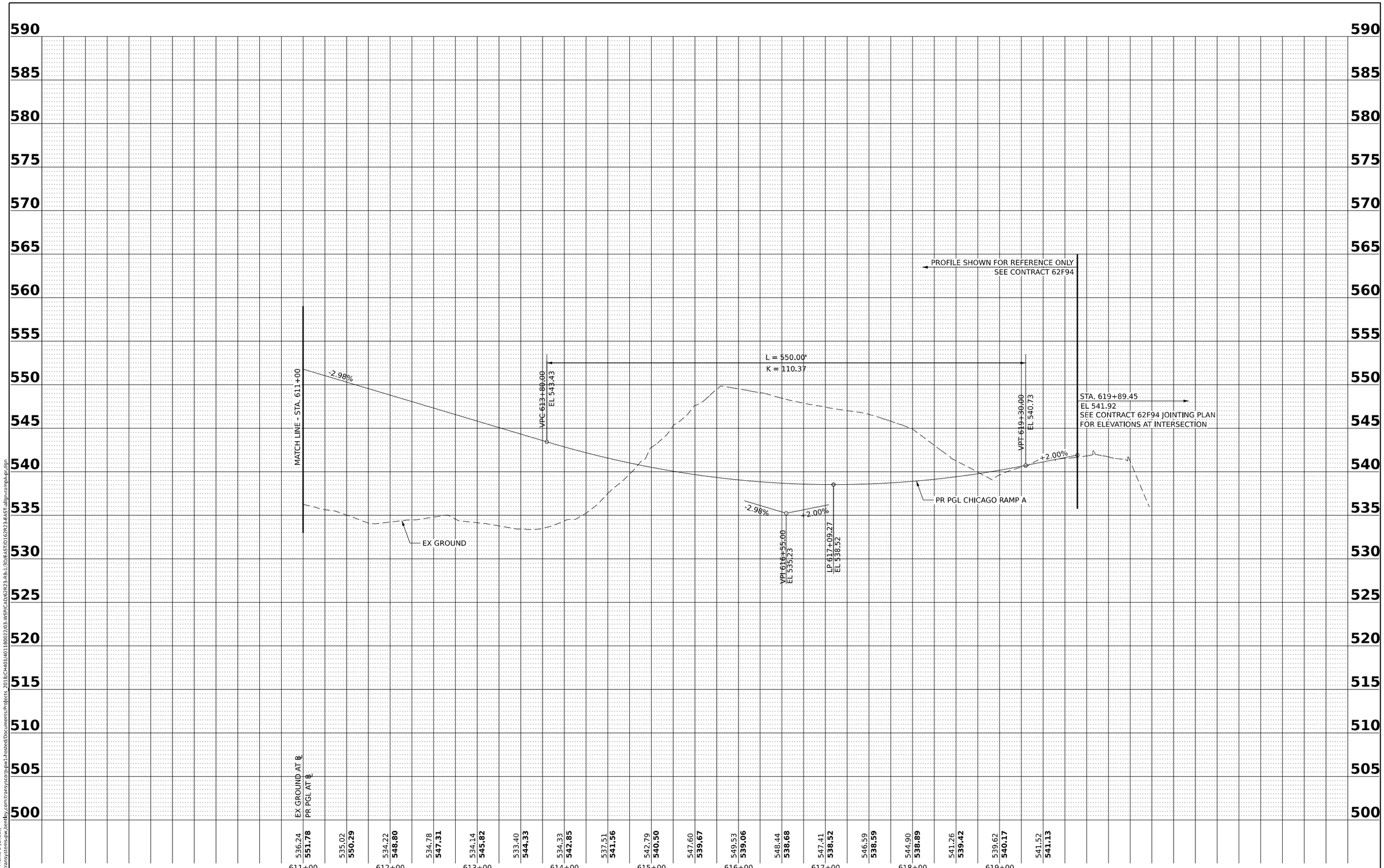

MODEL: Ramp A - Profile 2 [Sheet]
FILE NAME: pw://transystems-pw.bentley.com:transyscorp-pw1-hosted/Documents/Projects_2018/CH401/401180022/03-WSP/CAD/62R23-RB-1/30/EAST/D162R23-EAST-align-ramp-pr.dgn

BURNS McDONNELL

USER NAME = USGP718052	DESIGNED - JAP	REVISED -	
	DRAWN - TMM	REVISED -	
PLOT SCALE = 0.16666667 ' / in.	CHECKED - JIR	REVISED -	
PLOT DATE = 11/5/2025	DATE - 11/7/2025	REVISED -	

STATE OF ILLINOIS
DEPARTMENT OF TRANSPORTATION

ROADWAY PROFILE
CHICAGO STREET RAMP A

SCALE: 50H:5V | SHEET 2 OF 2 SHEETS | STA. 610+50 TO STA. 623+00

F.A.I. RTE.	SECTION	COUNTY	TOTAL SHEETS	SHEET NO.
80	FAI 80 21 STRUCTURE 2	WILL	1230	107
		CONTRACT NO. 62R23		
		ILLINOIS	FED. AID PROJECT	

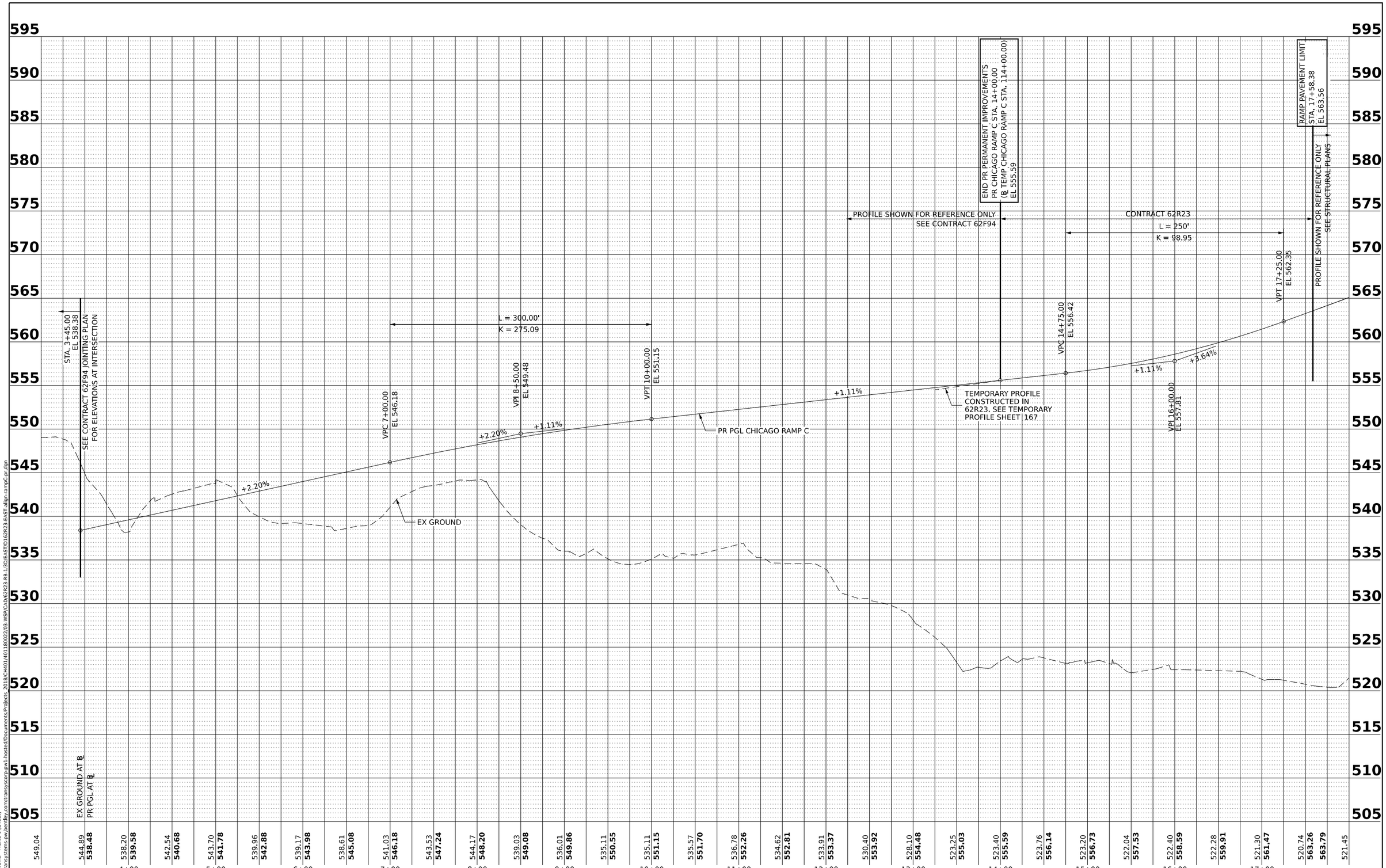

MODEL: Ramp C_profile - Profile 1 [Sheet]
FILE NAME: pw://transystems-pw.bentley.com:transyscorp-pw1-hosted/Documents/Projects_2018/CH401/401180022/03-WSP/CAD/62R23-RB-1/3D/EAST/D162R23-EAST-align+rampC-pr.dgn

BURNS McDONNELL

USER NAME = USGP718052	DESIGNED - JAP	REVISED -	
	DRAWN - TMM	REVISED -	
PLOT SCALE = 0.16666667 ' / in.	CHECKED - JIR	REVISED -	
PLOT DATE = 11/5/2025	DATE - 11/7/2025	REVISED -	

STATE OF ILLINOIS
DEPARTMENT OF TRANSPORTATION

ROADWAY PROFILE
CHICAGO STREET RAMP C

SCALE: 50H:5V | SHEET 1 OF 1 SHEETS | STA. 3+00 TO STA. 18+00

F.A.I. RTE.	SECTION	COUNTY	TOTAL SHEETS	SHEET NO.
80	FAI 80 21 STRUCTURE 2	WILL	1230	108
		CONTRACT NO. 62R23		
		ILLINOIS	FED. AID PROJECT	

EXIST I-80 WB OVER
DES PLAINES RIVER
SN 099-0057

AC

EXIST R.O.W.

CSX RR

EXIST EB I-80

EXIST WB I-80

BEGIN ROADWAY
IMPROVEMENT
STA. 214+54.07

EXIST R.O.W.

213

214

US-6

℄ US-6

215+00

216

217

21'

21'

2'

MATCHLINE STA. 217+50.00

EXIST R.O.W.

AGGREGATE SHOULDERS, TYPE B

PR CONSTRUCTION LIMITS

HMA SURFACE COURSE, IL-9.5, MIX "D", N70, 2"
HMA BINDER COURSE, IL-9.5, N70, 2"

STA 216+23.70
OFF 31.13' RT

EXIST I-80 EB OVER DES PLAINES RIVER
SN 099-0056

CHAIN LINK FENCE, 6'

EXIST R.O.W.

N

0 20 40 60

SCALE IN FEET

KEY PLAN

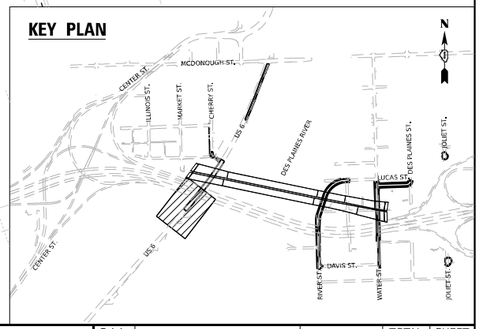

MODEL: Default
FILE NAME: pw://transystems-pw.bentley.com:transyscorp-pw1-hosted/Documents/Projects_2018/CH401/401180022/03-WSP/CAD/62R23-RB-1/Sheets/Civil/0162R23-sht-plan11.dgn

WSP USA Inc.
30 N. LASALLE STREET
SUITE 4200
CHICAGO, IL 60602
TEL: (312) 782-8150

USER NAME = USGP718052	DESIGNED - KW	REVISED -	
	DRAWN - KW	REVISED -	
PLOT SCALE = 40.000 ' / in.	CHECKED - KSD	REVISED -	
PLOT DATE = 11/5/2025	DATE - 11/7/2025	REVISED -	

STATE OF ILLINOIS
DEPARTMENT OF TRANSPORTATION

PROPOSED ROADWAY PLAN
US–6

SCALE: 1"=20' | SHEET 1 OF 14 SHEETS | STA. TO STA.

F.A.I. RTE.	SECTION	COUNTY	TOTAL SHEETS	SHEET NO.
80	FAI 80 21 STRUCTURE 2	WILL	1230	109
		CONTRACT NO. 62R23		
		ILLINOIS	FED. AID PROJECT	

I-80 EB OVER DES PLAINES RIVER
SN 099-8325

℄ CENTER RAMP C

I-80 WB OVER DES PLAINES RIVER
SN 099-8309

℄ CENTER RAMP B

PR PERM EASEMENT

PR R.O.W.

CHERRY STREET

EXIST R

PR CONSTRUCTION LIMITS

FOR CHERRY STREET ROADWAY PLAN
SEE SHEET #120

CSX RR

CHERRY STREET STA. 500+00.00 =
US-6 STA. 221+20.02

END ROADWAY
IMPROVEMENT
STA. 221+75.00

EXIST R.O.W.

℄ I-80

℄ CHERRY ST.

CONCRETE BARRIER WALL,
VERTICAL FACE (SPECIAL)
CONCRETE BARRIER BASE (SPECIAL)
SUBBASE GRANULAR MATERIAL, TYPE A

IMPACT ATTENUATOR
(FULLY REDIRECTIVE, WIDE),
TEST LEVEL 2

PR PERM EASEMENT

US-6

MATCHLINE STA. 217+50.00

℄ US-6

STA 217+98.76
OFF 31.42' RT

STA 218+35.00
OFF 20.35' RT

STA 218+65.00
OFF 20.78' RT

STA 219+85.00
OFF 21.28' RT

STA 220+15.00
OFF 21.21' RT

STA 220+18.00
OFF 30.79'

STA 219+82.00
OFF 30.87' RT

STA 218+68.00
OFF 31.19' RT

STA 218+32.00
OFF 31.30' RT

EB I-80

WB I-80

EXIST R.O.W.

PR CONSTRUCTION LIMITS

STA 222+09.79
OFF 34.76' RT

HMA SURFACE COURSE, IL-9.5, MIX "D", N70, 2"
HMA BINDER COURSE, IL-9.5, N70, 2"

STA 220+47.83
OFF 30.73' RT

PCC DRIVEWAY PAVEMENT, 6"
AGGREGATE SUBGRADE IMPROVEMENT, 12"

AGGREGATE SURFACE COURSE, TYPE A 6"
AGGREGATE SUBGRADE IMPROVEMENT, 12"

PCC DRIVEWAY PAVEMENT, 6"
AGGREGATE SUBGRADE IMPROVEMENT, 12"

CHAIN LINK FENCE, 6'

STA 220+75.04
OFF 114.59' RT

EXIST I-80 WB OVER DES PLAINES RIVER
SN 099-0057

EXIST WB I-80

CHAIN LINK FENCE, 6'

STA 218+46.12
OFF 180.81' RT

CHAIN LINK GATES, 6' X 12' DOUBLE
STA. 218+79.78, OFFSET 164.67' RT

AGGREGATE SURFACE COURSE, TYPE A 6"
AGGREGATE SUBGRADE IMPROVEMENT, 12"

0 20 40 60
SCALE IN FEET

KEY PLAN

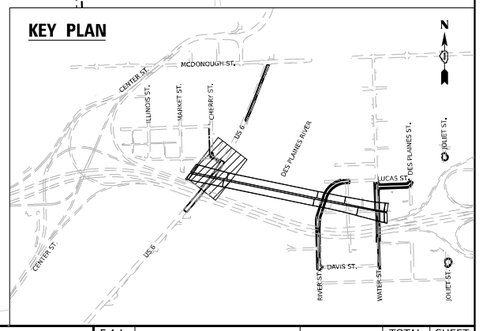

MODEL: Default
FILE NAME: pw://transystems-pw.bentley.com:transyscorp-pw1-hosted/Documents/Projects_2018/CH401/401180022/03-WSP/CAD/62R23-RB-1/Sheets/Civil/D162R23-ch-plan12.dgn

WSP USA Inc.
30 N. LASALLE STREET
SUITE 4200
CHICAGO, IL 60602
TEL: (312) 782-8150

USER NAME = USGP718052	DESIGNED - KW	REVISED -	
	DRAWN - KW	REVISED -	
PLOT SCALE = 40.000 ' / in.	CHECKED - KSD	REVISED -	
PLOT DATE = 11/5/2025	DATE - 11/7/2025	REVISED -	

STATE OF ILLINOIS
DEPARTMENT OF TRANSPORTATION

PROPOSED ROADWAY PLAN
US–6

SCALE: 1"=20' | SHEET 2 OF 14 SHEETS | STA. TO STA.

F.A.I. RTE.	SECTION	COUNTY	TOTAL SHEETS	SHEET NO.
80	FAI 80 21 STRUCTURE 2	WILL	1230	110
		CONTRACT NO. 62R23		
	ILLINOIS	FED. AID PROJECT		

0 20 40 60
SCALE IN FEET

HMA SURFACE COURSE, IL-9.5, MIX "D", N70, 2"
HMA BINDER COURSE, IL-19.0, N70, 4"
AGGREGATE SUBGRADE IMPROVEMENT, 12"

CSX RR

CSX RR

BEGIN ROADWAY IMPROVEMENT STA. 226+15.00

AGGREGATE SHOULDERS, TYPE B

PR CONSTRUCTION LIMITS

EXIST R.O.W.

EXIST R.O.W.

2'

18'

3'

225+00

226

227

228

229

230+00

US-6

EXIST R.O.W.

EXIST R.O.W.

℄ US-6

MATCHLINE STA. 230+50.00

KEY PLAN

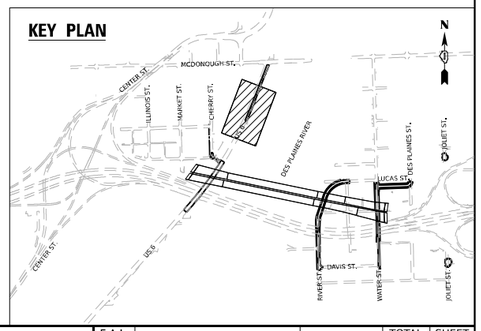

MODEL: Default
FILE NAME: pw://transystems-pw.bentley.com:transyscorp-pw1-hosted/Documents/Projects_2018/CH401/401180022/03-WSP/CAD/62R23-RB-1/Sheets/Civil/0162R23-ihl-plan13.dgn

WSP USA Inc.
30 N. LASALLE STREET
SUITE 4200
CHICAGO, IL 60602
TEL: (312) 782-8150

USER NAME = USGP718052	DESIGNED - KW	REVISED -
	DRAWN - KW	REVISED -
PLOT SCALE = 40.000 ' / in.	CHECKED - KSD	REVISED -
PLOT DATE = 11/5/2025	DATE - 11/7/2025	REVISED -

STATE OF ILLINOIS
DEPARTMENT OF TRANSPORTATION

PROPOSED ROADWAY PLAN
US-6

SCALE: 1"=20' | SHEET 3 OF 14 SHEETS | STA. TO STA.

F.A.I. RTE.	SECTION	COUNTY	TOTAL SHEETS	SHEET NO.
80	FAI 80 21 STRUCTURE 2	WILL	1230	111
		CONTRACT NO. 62R23		
		ILLINOIS	FED. AID PROJECT	

0 20 40 60
SCALE IN FEET

EXIST R.O.W.

CSX RR

HMA SURFACE COURSE, IL-9.5, MIX "D", N70, 2"
HMA BINDER COURSE, IL-19.0, N70, 4"
AGGREGATE SUBGRADE IMPROVEMENT, 12"

AGGREGATE SHOULDERS, TYPE B

PR CONSTRUCTION LIMITS

END ROADWAY
IMPROVEMENT
STA. 233+22.35

CSX RR

EXIST R.O.W.

2'

21'

3'

MATCHLINE STA. 230+50.00

231

232

233

US-6

EXIST R.O.W.

℄ US-6

MCDONOUGH STREET

EXIST R.O.W.

KEY PLAN

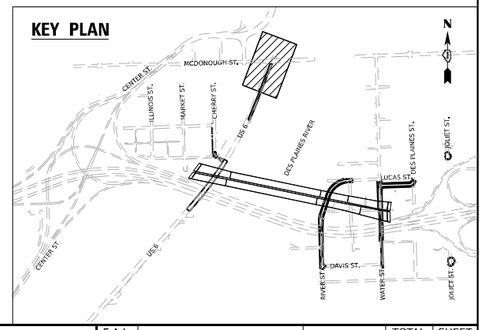

MODEL: Default
FILE NAME: pw://transystems-pw.bentley.com:transyscorp-pw1-hosted/Documents/Projects_2018/CH401/401180022/03-WSP/CAD/62R23-RB-1/Sheets/CIVIL/D162R23-sht-plan-13-2.dgn

WSP USA Inc.
30 N. LASALLE STREET
SUITE 4200
CHICAGO, IL 60602
TEL: (312) 782-8150

USER NAME = USGP718052	DESIGNED - KW	REVISED -	
	DRAWN - KW	REVISED -	
PLOT SCALE = 40.000 ' / in.	CHECKED - KSD	REVISED -	
PLOT DATE = 11/5/2025	DATE - 11/7/2025	REVISED -	

STATE OF ILLINOIS
DEPARTMENT OF TRANSPORTATION

PROPOSED ROADWAY PLAN
US–6

SCALE: 1"=20' | SHEET 4 OF 14 SHEETS | STA. TO STA.

F.A.I. RTE.	SECTION	COUNTY	TOTAL SHEETS	SHEET NO.
80	FAI 80 21 STRUCTURE 2	WILL	1230	112
		CONTRACT NO. 62R23		
	ILLINOIS	FED. AID PROJECT		

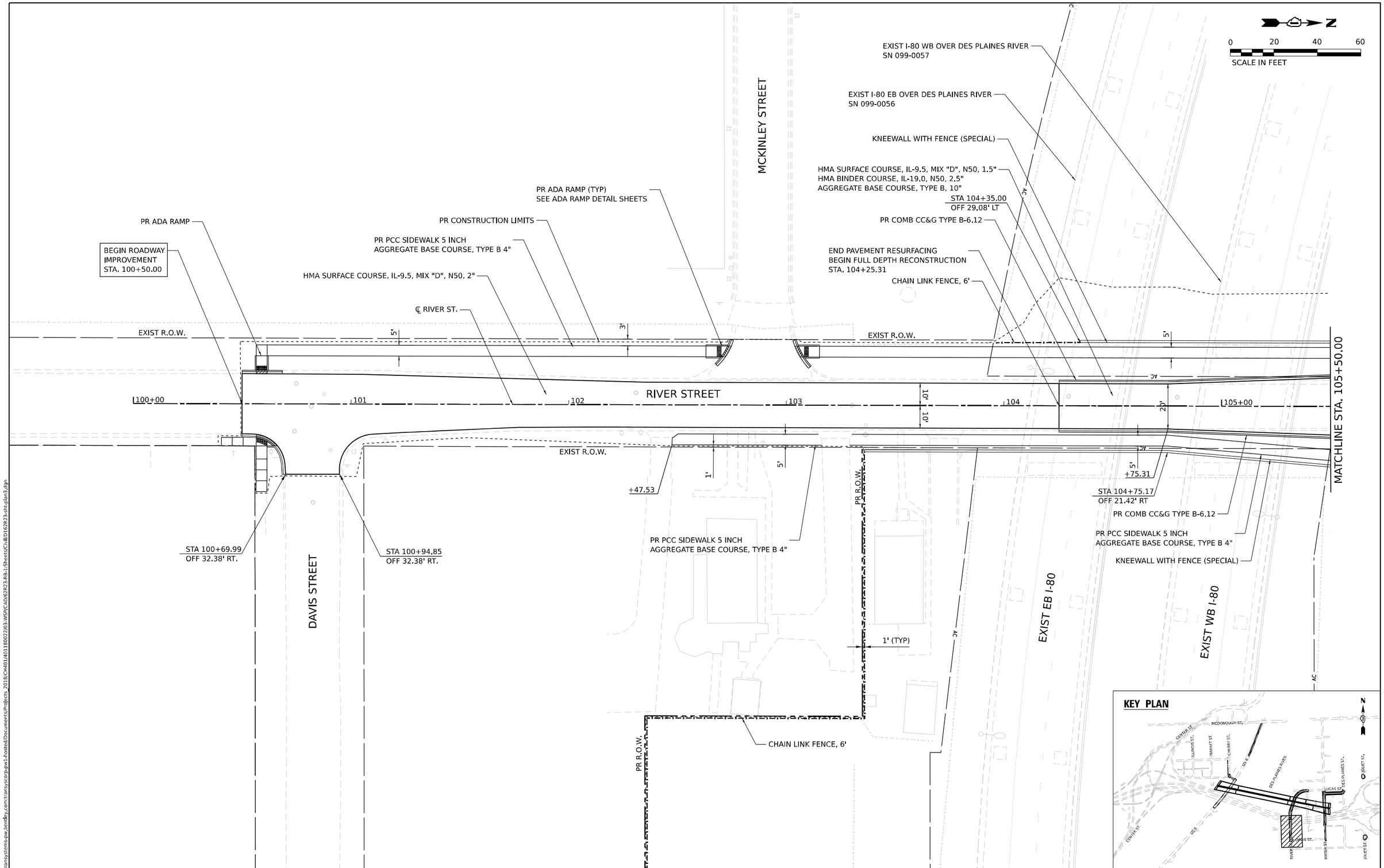

MODEL: Default
FILE NAME: pw://transystems-pw.bentley.com:transyscorp-pw1-hosted/Documents/Projects_2018/CH401/401180022/03-WSP/CAD/62R23-RB-1/Sheets/Civil/0162R23-sht-plan3.dgn

WSP USA Inc.
30 N. LASALLE STREET
SUITE 4200
CHICAGO, IL 60602
TEL: (312) 782-8150

USER NAME = USGP718052	DESIGNED - AD	REVISED -	
	DRAWN - AD	REVISED -	
PLOT SCALE = 40.000 ' / in.	CHECKED - KSD	REVISED -	
PLOT DATE = 11/5/2025	DATE - 11/7/2025	REVISED -	

STATE OF ILLINOIS
DEPARTMENT OF TRANSPORTATION

PROPOSED ROADWAY PLAN
RIVER STREET

SCALE: 1"=20' | SHEET 5 OF 14 SHEETS | STA. TO STA.

F.A.I. RTE.	SECTION	COUNTY	TOTAL SHEETS	SHEET NO.
80	FAI 80 21 STRUCTURE 2	WILL	1230	113
		CONTRACT NO. 62R23		
		ILLINOIS	FED. AID PROJECT	

I-80 EB OVER DES PLAINES RIVER
SN 099-8325

℄ I-80

I-80 WB OVER DES PLAINES RIVER
SN 099-8309

CHAIN LINK FENCE, 6'

PR TEMPORARY EASEMENT

PR CONSTRUCTION LIMITS

PR PERMANENT EASEMENT

PR R.O.W.

EXIST R.O.W.

LUCAS STREET

STA 107+63.00
OFF 62.68' LT.

STA 107+87.00
OFF 62.68' LT.

PR PCC SIDEWALK 5 INCH
AGGREGATE BASE COURSE, TYPE B 4"

PR COMB CC&G TYPE B-6.12

CHAIN LINK GATES, 6' X 12' DOUBLE

PCC DRIVEWAY PAVEMENT, 6"
AGGREGATE BASE COURSE, TYPE B 4"

KNEEWALL WITH FENCE (SPECIAL)

STA 110+13.00
OFF 29.00' LT.

STA 107+66.00
OFF 15.00' LT.

STA 107+84.00
OFF 15.00' LT.

PR COMB CC&G TYPE B-6.12

PR PERMANENT EASEMENT

RIVER STREET

MATCHLINE STA. 105+50.00

PR CONSTRUCTION LIMITS

STA 107+66.00
OFF 15.00 RT.

STA 107+84.00
OFF 15.00' RT.

℄ RIVER ST.

+75.31

STA 105+75.31
OFF 22.08' RT.

STA 105+75.31
OFF 30.08' RT.

PR PCC SIDEWALK 5 INCH
AGGREGATE BASE COURSE, TYPE B 4"

KNEEWALL WITH FENCE (SPECIAL)

HMA SURFACE COURSE, IL-9.5, MIX "D", N50, 1.5"
HMA BINDER COURSE, IL-19.0, N50, 2.5"
AGGREGATE BASE COURSE, TYPE B, 10"

PR COMB CC&G TYPE B-6.12

PR COMB CC&G TYPE B-6.12

PR PCC SIDEWALK 5 INCH
AGGREGATE BASE COURSE, TYPE B 4"

KNEEWALL WITH FENCE (SPECIAL)

HMA SURFACE COURSE, IL-9.5, MIX "D", N50, 1.5"
HMA BINDER COURSE, IL-19.0, N50, 2.5"
AGGREGATE BASE COURSE, TYPE B, 10"

DUNCAN STREET

CHAIN LINK GATES, 6' X 12' DOUBLE

PCC DRIVEWAY PAVEMENT, 6"
AGGREGATE BASE COURSE, TYPE B 4"

EB I-80

WB I-80

℄ CHICAGO RAMP C

PCC DRIVEWAY PAVEMENT, 6"
AGGREGATE BASE COURSE, TYPE B 4"

STA 111+74.27
OFF 22.08' RT

PCC DRIVEWAY PAVEMENT, 6"
AGGREGATE BASE COURSE, TYPE B 4"

PR R.O.W.

STA 112+17.00
OFF 19.32' RT

END PAVEMENT RECONSTRUCTION,
BEGIN PAVEMENT RESURFACING
STA. 112+17.00

HMA SURFACE COURSE, IL-9.5, MIX "D", N50, 2"

MATCHLINE STA. 112+50.00

KIEP AVENUE

℄ CHICAGO RAMP A

EXIST R.O.W.

0 20 40 60
SCALE IN FEET

N

KEY PLAN

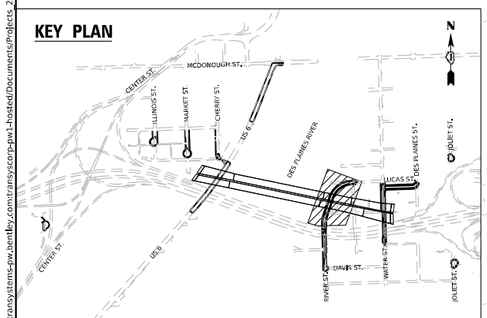

MODEL: Default
FILE NAME: pw://transystems-pw.bentley.com:transyscorp-pw1-hosted/Documents/Projects_2018/CH401/401180022/03-WSP/CAD/62R23-RB-1/Sheets/Civil/D162R23-sht-plan4.dgn

WSP USA Inc.
30 N. LASALLE STREET
SUITE 4200
CHICAGO, IL 60602
TEL: (312) 782-8150

USER NAME = USGP718052	DESIGNED - AD	REVISED -	
	DRAWN - AD	REVISED -	
PLOT SCALE = 40.000 ' / in.	CHECKED - KSD	REVISED -	
PLOT DATE = 11/5/2025	DATE - 11/7/2025	REVISED -	

STATE OF ILLINOIS
DEPARTMENT OF TRANSPORTATION

PROPOSED ROADWAY PLAN
RIVER STREET

SCALE: 1"=20' | SHEET 6 OF 14 SHEETS | STA. TO STA.

F.A.I. RTE.	SECTION	COUNTY	TOTAL SHEETS	SHEET NO.
80	FAI 80 21 STRUCTURE 2	WILL	1230	114
		CONTRACT NO. 62R23		
		ILLINOIS	FED. AID PROJECT	

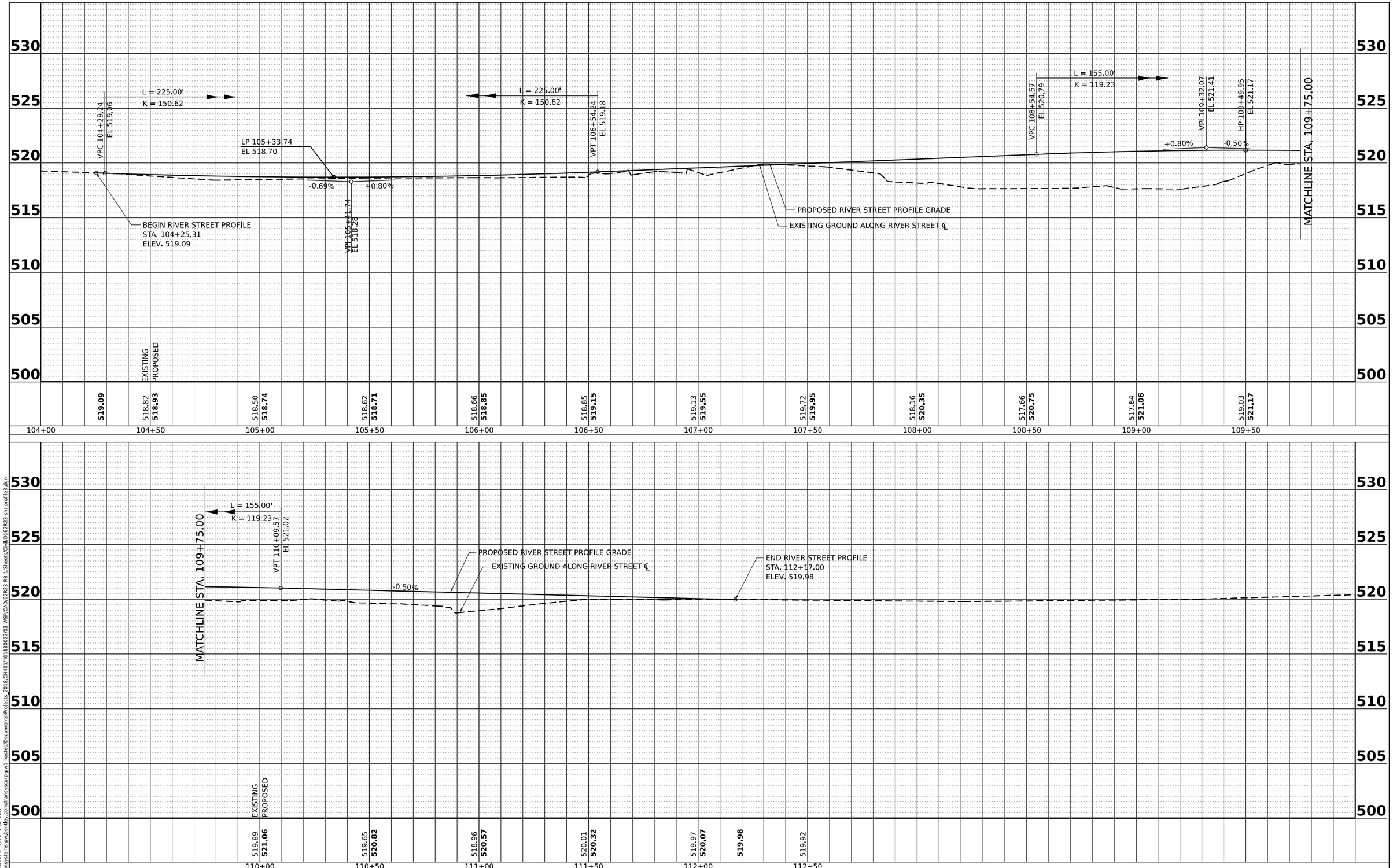

MODEL: PrCL_RiverStreet-3 - River-1 [Sheet]
FILE NAME: pw://transystems-pw.bentley.com:transyscorp-pw1-hosted/Documents/Projects_2018/CH401/401180022/03-WSP/CAD/62R23-RB-1/Sheets/Civil/0162R23-sht-profile3.dgn

WSP USA Inc.
30 N. LASALLE STREET
SUITE 4200
CHICAGO, IL 60602
TEL: (312) 782-8150

USER NAME = USGP718052	DESIGNED - AD	REVISED -
	DRAWN - AD	REVISED -
PLOT SCALE = 0.16666667 ' / in.	CHECKED - KSD	REVISED -
PLOT DATE = 11/5/2025	DATE - 11/7/2025	REVISED -

STATE OF ILLINOIS
DEPARTMENT OF TRANSPORTATION

PROPOSED ROADWAY PROFILE
RIVER STREET

SCALE: HORIZ: 1"=20' VERT: 1"=5' | SHEET 7 OF 14 SHEETS | STA. TO STA.

F.A.I. RTE.	SECTION	COUNTY	TOTAL SHEETS	SHEET NO.
80	FAI 80 21 STRUCTURE 2	WILL	1230	115
		CONTRACT NO. 62R23		
		ILLINOIS	FED. AID PROJECT	

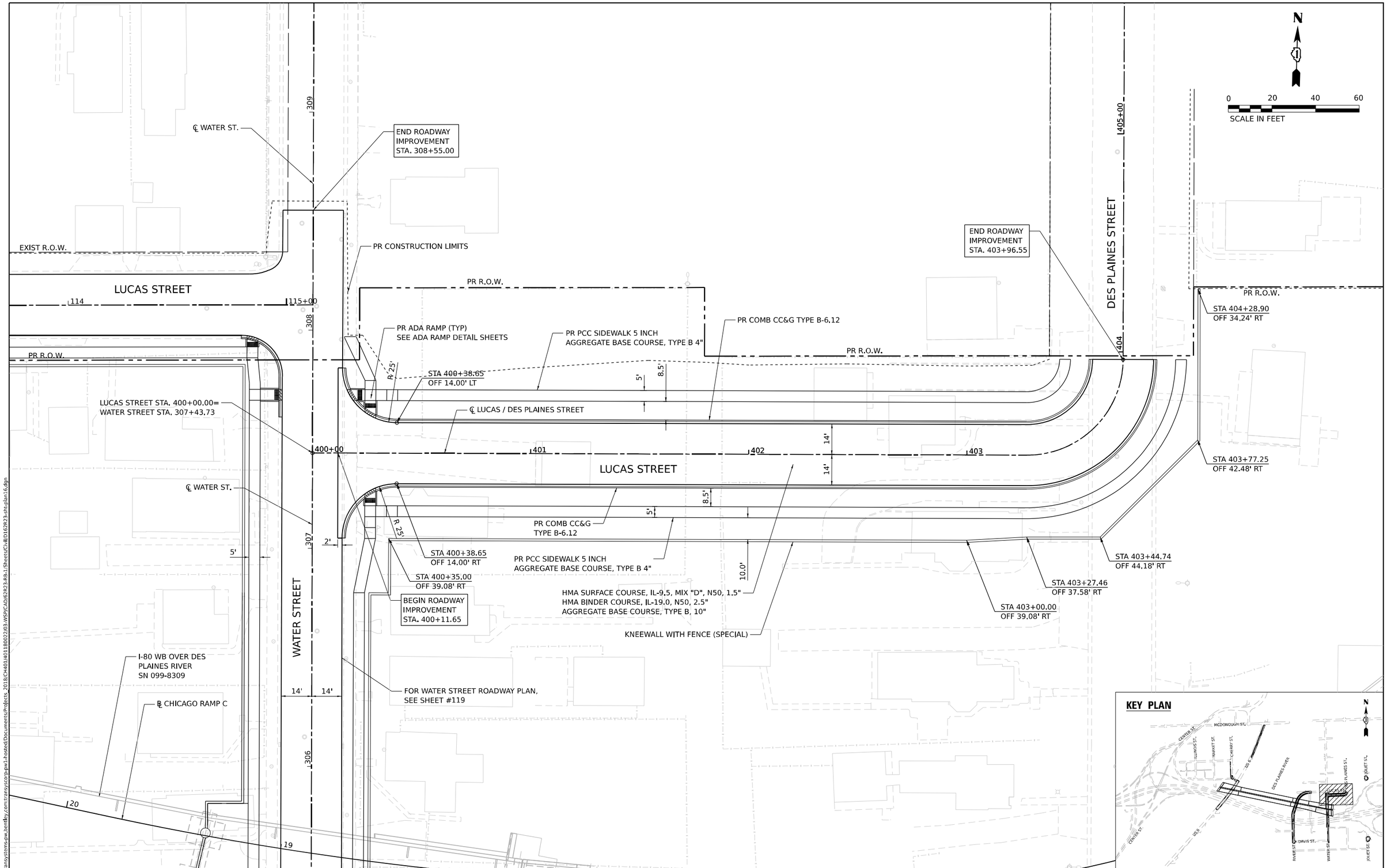

MODEL: Default
FILE NAME: pw://transystems-pw.bentley.com:transyscorp-pw1-hosted/Documents/Projects_2018/CH401/401180022/03-WSP/CAD/62R23-RB-1/Sheets/Civil/D162R23-ilhc-plan16.dgn

WSP

WSP USA Inc.
30 N. LASALLE STREET
SUITE 4200
CHICAGO, IL 60602
TEL: (312) 782-8150

USER NAME = USGP718052	DESIGNED - AD	REVISED -
	DRAWN - AD	REVISED -
PLOT SCALE = 40.000 ' / in.	CHECKED - KSD	REVISED -
PLOT DATE = 11/5/2025	DATE - 11/7/2025	REVISED -

STATE OF ILLINOIS
DEPARTMENT OF TRANSPORTATION

PROPOSED ROADWAY PLAN
LUCAS STREET

SCALE: 1"=20' | SHEET 8 OF 14 SHEETS | STA. TO STA.

F.A.I. RTE.	SECTION	COUNTY	TOTAL SHEETS	SHEET NO.
80	FAI 80 21 STRUCTURE 2	WILL	1230	116
		CONTRACT NO. 62R23		
		ILLINOIS	FED. AID PROJECT	

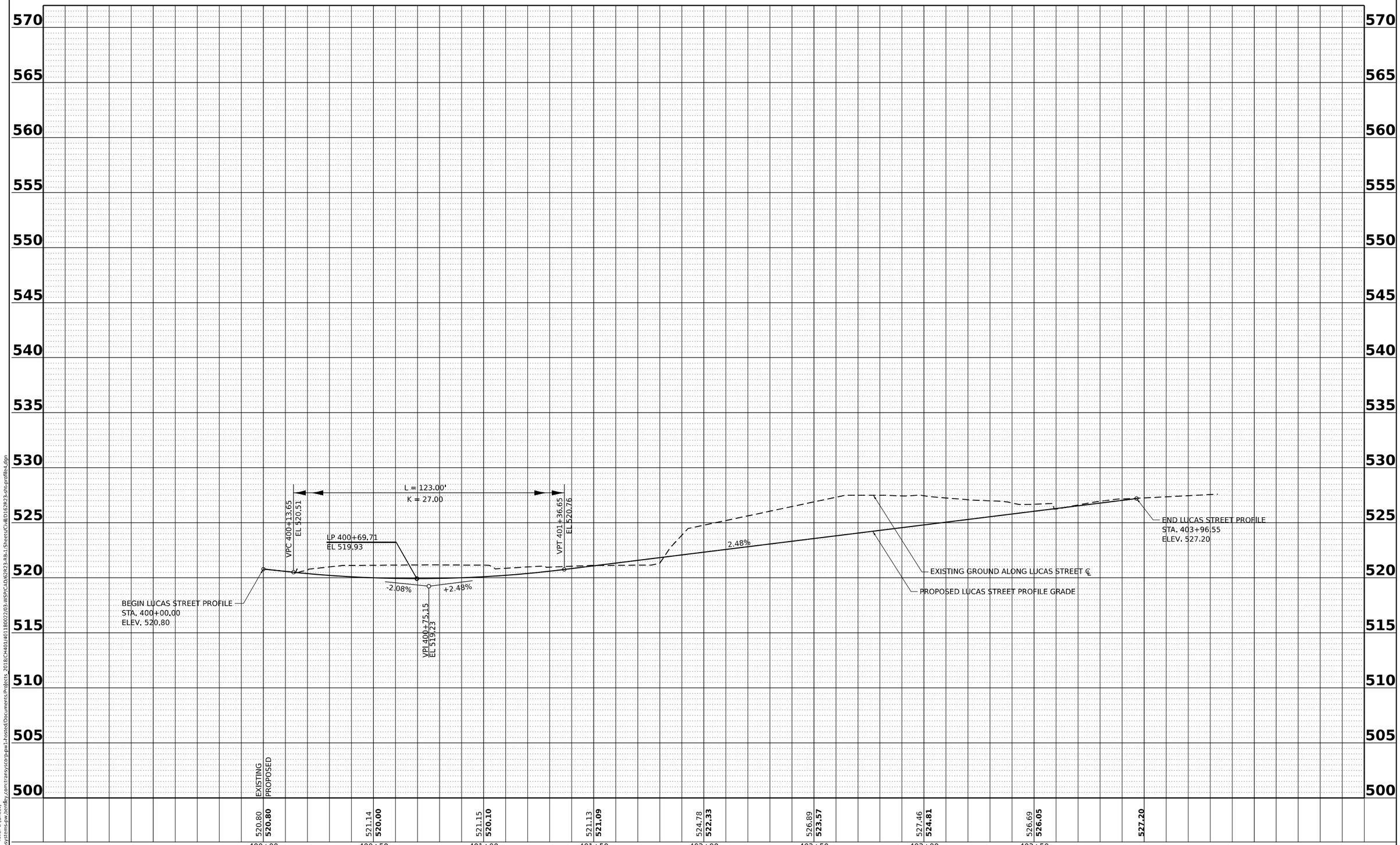

MODEL: LUCAS_PrCL - River-2 [Sheet]
FILE NAME: pw://transystems-pw.bentley.com:transyscorp-pw1-hosted/Documents/Projects_2018/CH401/401180022/03-WSP/CAD/62R23-RB-1/Sheets/Civil/0162R23-sht-profile4.dgn

WSP USA Inc.
30 N. LASALLE STREET
SUITE 4200
CHICAGO, IL 60602
TEL: (312) 782-8150

USER NAME = USGP718052	DESIGNED - AD	REVISED -	
	DRAWN - AD	REVISED -	
PLOT SCALE = 0.16666667 ' / in.	CHECKED - KSD	REVISED -	
PLOT DATE = 11/5/2025	DATE - 11/7/2025	REVISED -	

STATE OF ILLINOIS
DEPARTMENT OF TRANSPORTATION

PROPOSED ROADWAY PROFILE
LUCAS STREET

SCALE: HORIZ: 1"=20' VERT: 1"=5' | SHEET 9 OF 14 SHEETS | STA. TO STA.

F.A.I. RTE.	SECTION	COUNTY	TOTAL SHEETS	SHEET NO.
80	FAI 80 21 STRUCTURE 2	WILL	1230	117
		CONTRACT NO. 62R23		
		ILLINOIS	FED. AID PROJECT	

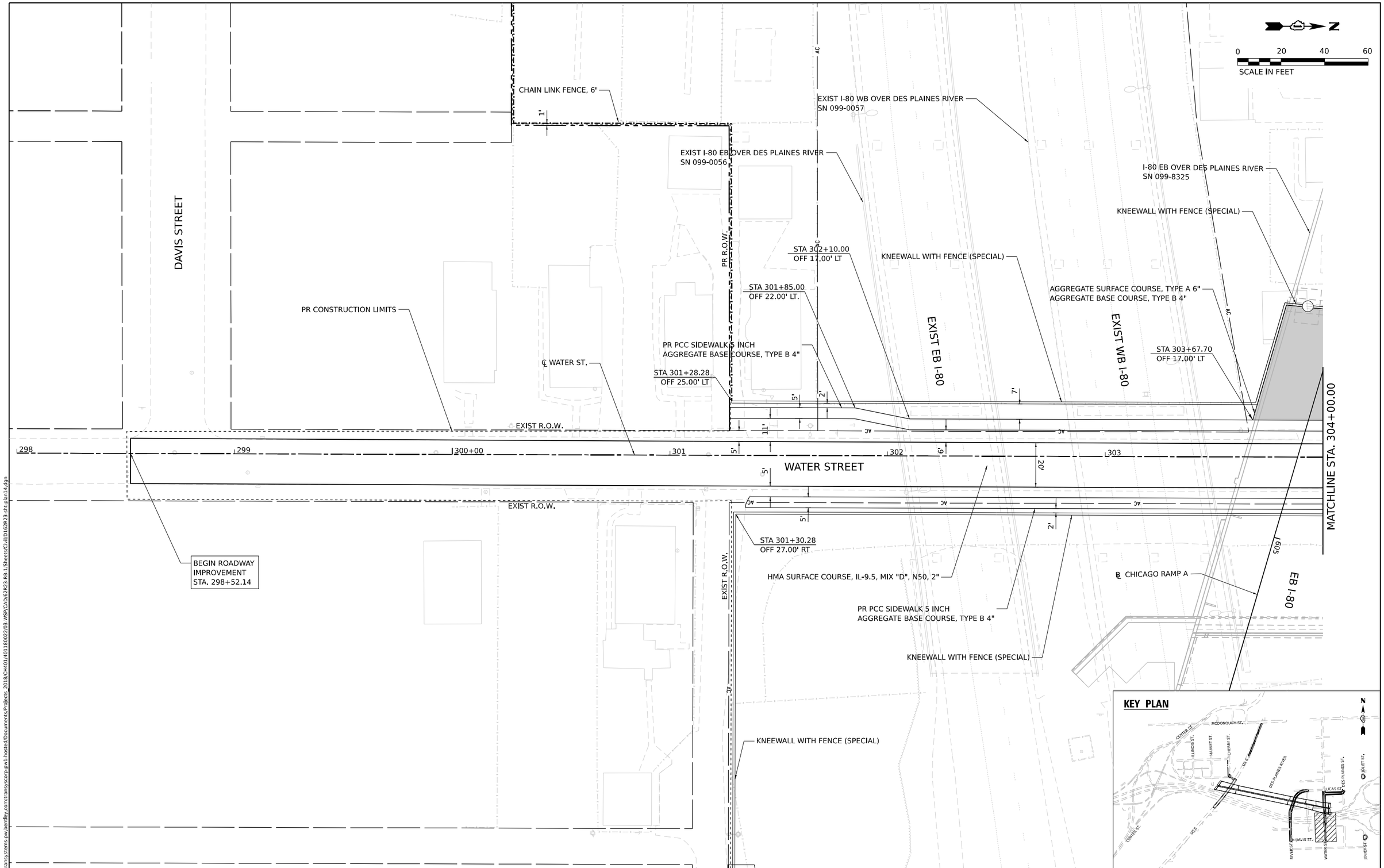

MODEL: Default
FILE NAME: pw://transystems-pw.bentley.com:transyscorp-pw1-hosted/Documents/Projects_2018/CH401/401180022/03-WSP/CAD/62R23-RB-1/Sheets/CivilD162R23-site-plan14.dgn

WSP USA Inc.
20 N. LASALLE STREET
SUITE 4200
CHICAGO, IL 60602
TEL: (312) 782-8150

USER NAME = donahuek1	DESIGNED - AD	REVISED -	
	DRAWN - AD	REVISED -	
PLOT SCALE = 40.000 ' / in.	CHECKED - KSD	REVISED -	
PLOT DATE = 11/6/2025	DATE - 11/7/2025	REVISED -	

STATE OF ILLINOIS
DEPARTMENT OF TRANSPORTATION

PROPOSED ROADWAY PLAN
WATER STREET

SCALE: 1"=20' | SHEET 10 OF 14 SHEETS | STA. TO STA.

F.A.I. RTE.	SECTION	COUNTY	TOTAL SHEETS	SHEET NO.
80	FAI 80 21 STRUCTURE 2	WILL	1230	118
		CONTRACT NO. 62R23		
	ILLINOIS	FED. AID PROJECT		

MATCHLINE STA. 112+50.00

0 20 40 60
SCALE IN FEET

1'
2'

PR PCC SIDEWALK 5 INCH
AGGREGATE BASE COURSE, TYPE B 4"

KNEEWALL WITH FENCE (SPECIAL)

HMA SURFACE COURSE, IL-9.5, MIX "D", N50, 2"

EXIST R.O.W.

SHERIDAN STREET

PR CONSTRUCTION LIMITS

END ROADWAY
IMPROVEMENT
STA. 308+55.00

℄ WATER ST.

RIVER STREET

PR R.O.W.

113

114

115+00

℄ I-80

DUNCAN STREET

I-80 WB OVER DES PLAINES RIVER
SN 099-8309

AGGREGATE SURFACE COURSE, TYPE A 6"
AGGREGATE BASE COURSE, TYPE B 4"

PCC DRIVEWAY PAVEMENT, 6"
AGGREGATE BASE COURSE, TYPE B 4"

℄ CHICAGO RAMP C

LUCAS STREET STA. 400+00.00=
WATER STREET STA. 307+43.73

PR PCC SIDEWALK 5 INCH
AGGREGATE BASE COURSE, TYPE B 4"

KNEEWALL WITH FENCE (SPECIAL)

HMA SURFACE COURSE, IL-9.5, MIX "D", N50, 2"

STA 305+83.00
OFF 29.00' LT

PCC DRIVEWAY PAVEMENT, 6"
AGGREGATE BASE COURSE,
TYPE B 4"

STA 304+51.17
OFF 17.00' LT.

STA 304+97.89
OFF 29.00' LT.

STA 304+40.00
OFF 6.05' LT.

STA 305+15.00
OFF 14.00' LT.

STA 305+45.00
OFF 14.00' LT.

STA 304+10.00
OFF 6.05' LT.

MATCHLINE STA. 304+00.00

WATER STREET

304 305+00 306 307 308 309

400+00

EXIST R.O.W.

PR COMB CC&G
TYPE B-6.12

+61.00

+85.32

PR COMB CC&G
TYPE B-6.12

I-80 WB OVER
DES PLAINES RIVER
SN 099-8309

PR PCC SIDEWALK 5 INCH
AGGREGATE BASE COURSE, TYPE B 4"

KNEEWALL WITH FENCE (SPECIAL)

STA 306+79.73
OFF 24.00' RT.

STA 306+78.73
OFF 36.00' RT

STA 307+03.88
OFF 29.00' RT.

PR ADA RAMP (TYP)
SEE ADA RAMP DETAIL SHEETS

FOR LUCAS STREET ROADWAY PLAN,
SEE SHEET #116

LUCAS STREET

℄ LUCAS / DES PLAINES ST.

PR R.O.W.

401

WB I-80

602 603 604 605

157 158 119 120 121 156 118

14' 10' 5' 2'

KEY PLAN

MCDONOUGH ST. CENTER ST. ILLINOIS ST. MARKET ST. CHERRY ST. US 6 DES PLAINES RIVER DES PLAINES ST. JOLIET ST. DAVIS ST. RIVER ST. WATER ST.

MODEL: Default
FILE NAME: pw://transystems-pw.bentley.com:transyscorp-pw1-hosted/Documents/Projects_2018/CH401/401180022/03-WSP/CAD/62R23-RB-1/Sheets/Civil/0162R23-sht-plan15.dgn

WSP USA Inc.
30 N. LASALLE STREET
SUITE 4200
CHICAGO, IL 60602
TEL: (312) 782-8150

USER NAME = USGP718052	DESIGNED - AD	REVISED -	
	DRAWN - AD	REVISED -	
PLOT SCALE = 40.000 ' / in.	CHECKED - KSD	REVISED -	
PLOT DATE = 11/5/2025	DATE - 11/7/2025	REVISED -	

STATE OF ILLINOIS
DEPARTMENT OF TRANSPORTATION

PROPOSED ROADWAY PLAN
WATER STREET

SCALE: 1"=20' | SHEET 11 OF 14 SHEETS | STA. TO STA.

F.A.I. RTE.	SECTION	COUNTY	TOTAL SHEETS	SHEET NO.
80	FAI 80 21 STRUCTURE 2	WILL	1230	119
		CONTRACT NO. 62R23		
		ILLINOIS	FED. AID PROJECT	

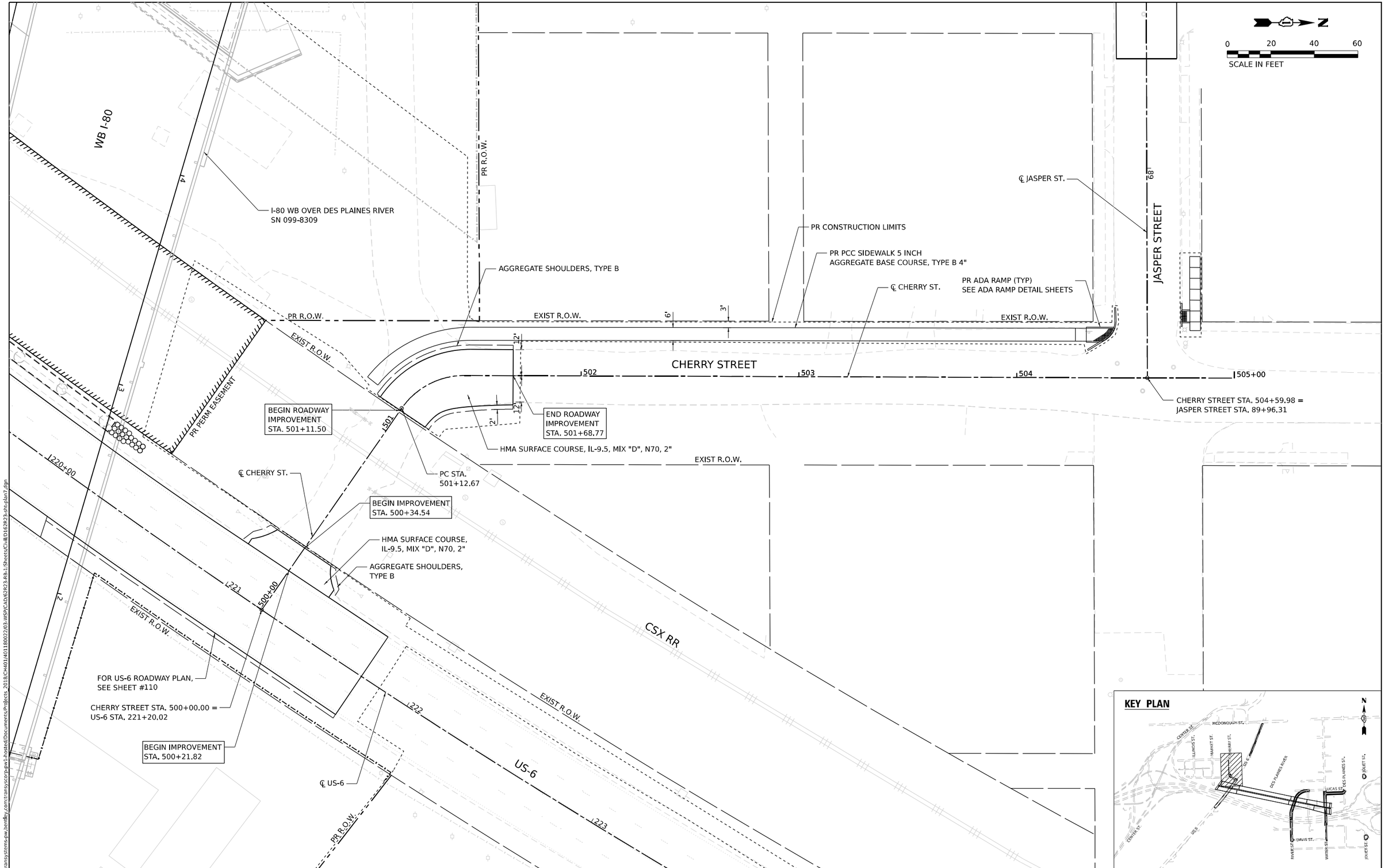

MODEL: Default
FILE NAME: pw://transystems-pw.bentley.com:transyscorp-pw1-hosted/Documents/Projects_2018/CH401/401180022/03-WSP/CAD/62R23-RB-1/Sheets/Civil/0162R23-ihc-plan7.dgn

WSP USA Inc.
30 N. LASALLE STREET
SUITE 4200
CHICAGO, IL 60602
TEL: (312) 782-8150

USER NAME = USGP718052	DESIGNED - AD	REVISED -	
	DRAWN - AD	REVISED -	
PLOT SCALE = 40.000 ' / in.	CHECKED - KSD	REVISED -	
PLOT DATE = 11/5/2025	DATE - 11/7/2025	REVISED -	

STATE OF ILLINOIS
DEPARTMENT OF TRANSPORTATION

PROPOSED ROADWAY PLAN
CHERRY STREET

SCALE: 1"=20' | SHEET 12 OF 14 SHEETS | STA. TO STA.

F.A.I. RTE.	SECTION	COUNTY	TOTAL SHEETS	SHEET NO.
80	FAI 80 21 STRUCTURE 2	WILL	1230	120
		CONTRACT NO. 62R23		
		ILLINOIS	FED. AID PROJECT	

0 20 40 60
SCALE IN FEET

PR CONSTRUCTION LIMITS

PCC DRIVEWAY PAVEMENT, 6"
AGGREGATE BASE COURSE, TYPE B 4"

PR COMB CC&G TYPE B-6.12

PCC DRIVEWAY PAVEMENT, 6"
AGGREGATE BASE COURSE, TYPE B 4"

HMA SURFACE COURSE, IL-9.5, MIX "D", N50, 1.5"
HMA BINDER COURSE, IL-19.0, N50, 2.5"
AGGREGATE BASE COURSE, TYPE B, 10"

EXIST R.O.W.

SOUTH STREET

JOLIET STREET

600+00 601 602

℄ JOLIET ST. SOUTH

EXIST R.O.W.

R 25'

R 25'

R 35'

6'

PR R.O.W.

PR R.O.W.

BEGIN ROADWAY
IMPROVEMENT
STA. 601+39.54

PR PCC SIDEWALK 5 INCH
AGGREGATE BASE COURSE, TYPE B 4"

SEE ROADWAY DETAIL SHEETS FOR ADDITIONAL
ROADWAY & CURB DETAILS

℄ CHICAGO RAMP A
SEE CONTRACT 62F94

CHICAGO RAMP A

1612

1613

1614

1615

12

11

KEY PLAN

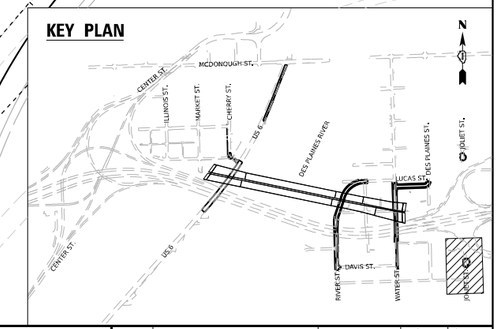

MODEL: Default
FILE NAME: pw://transystems-pw.bentley.com:transyscorp-pw1-hosted/Documents/Projects_2018/CH401401180022/03-WSP/CAD/62R23-RB-1/Sheets/CivilD162R23-site-plan5.dgn

WSP USA Inc.
30 N. LASALLE STREET
SUITE 4200
CHICAGO, IL 60602
TEL: (312) 782-8150

USER NAME = USGP718052	DESIGNED - KW	REVISED -	
	DRAWN - KW	REVISED -	
PLOT SCALE = 40.000 ' / in.	CHECKED - KSD	REVISED -	
PLOT DATE = 11/5/2025	DATE - 11/7/2025	REVISED -	

STATE OF ILLINOIS
DEPARTMENT OF TRANSPORTATION

PROPOSED ROADWAY PLAN
JOLIET STREET – SOUTH

SCALE: 1"=20' | SHEET 13 OF 14 SHEETS | STA. TO STA.

F.A.I. RTE.	SECTION	COUNTY	TOTAL SHEETS	SHEET NO.
80	FAI 80 21 STRUCTURE 2	WILL	1230	121
		CONTRACT NO. 62R23		
	ILLINOIS	FED. AID PROJECT		

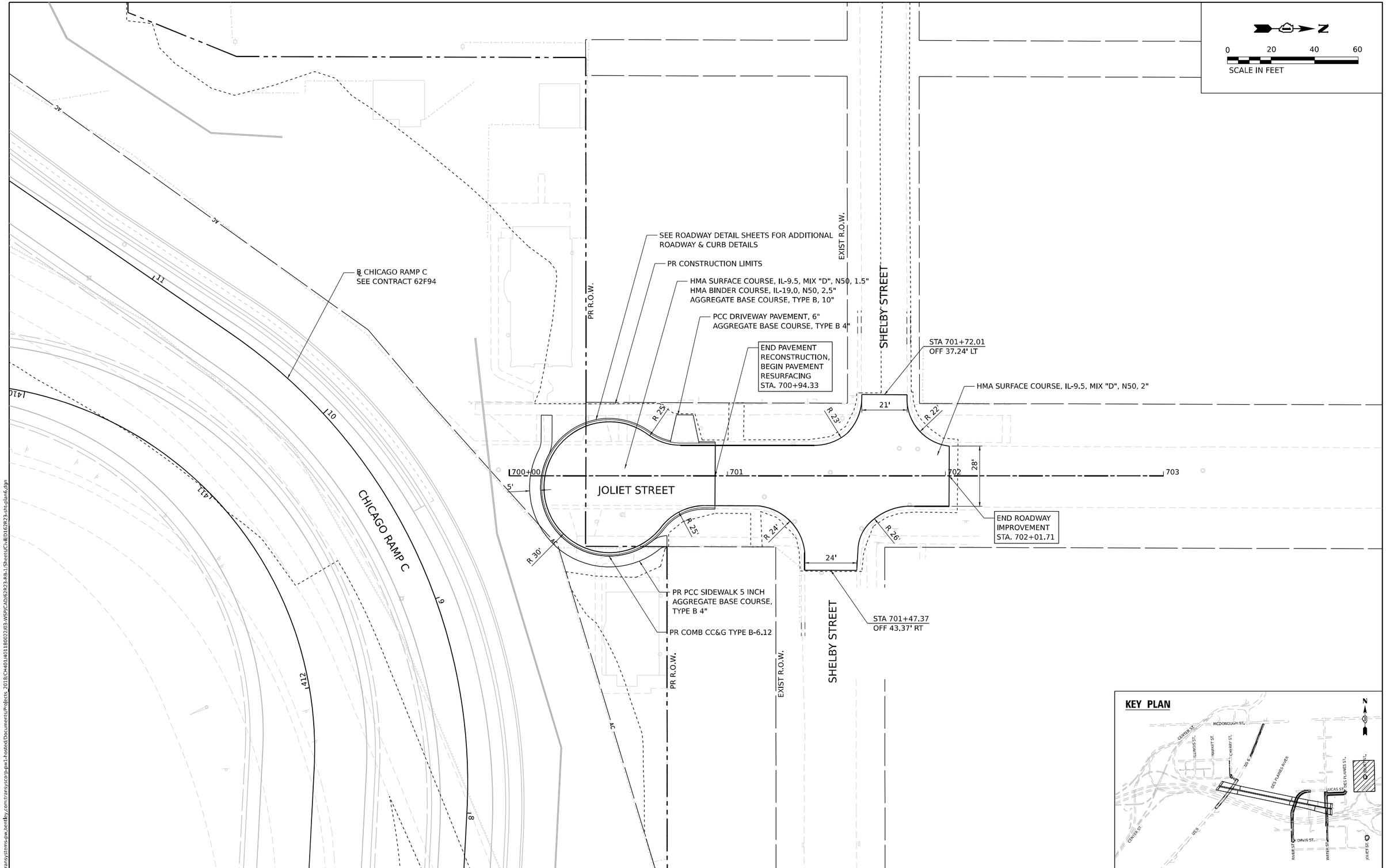

MODEL: Default
FILE NAME: pw://transystems-pw.bentley.com:transyscorp-pw1-hosted/Documents/Projects_2018/CH401/401180022/03-WSP/CAD/62R23-RB-1/Sheets/Civil/0162R23-sht-plan6.dgn

WSP USA Inc.
30 N. LASALLE STREET
SUITE 4200
CHICAGO, IL 60602
TEL: (312) 782-8150

USER NAME = USGP718052	DESIGNED - KW	REVISED -
	DRAWN - KW	REVISED -
PLOT SCALE = 40.000 ' / in.	CHECKED - KSD	REVISED -
PLOT DATE = 11/5/2025	DATE - 11/7/2025	REVISED -

STATE OF ILLINOIS
DEPARTMENT OF TRANSPORTATION

PROPOSED ROADWAY PLAN
JOLIET STREET – NORTH

SCALE: 1"=20' | SHEET 14 OF 14 SHEETS | STA. TO STA.

F.A.I. RTE.	SECTION	COUNTY	TOTAL SHEETS	SHEET NO.
80	FAI 80 21 STRUCTURE 2	WILL	1230	122
		CONTRACT NO. 62R23		
	ILLINOIS	FED. AID PROJECT		

KEY PLAN

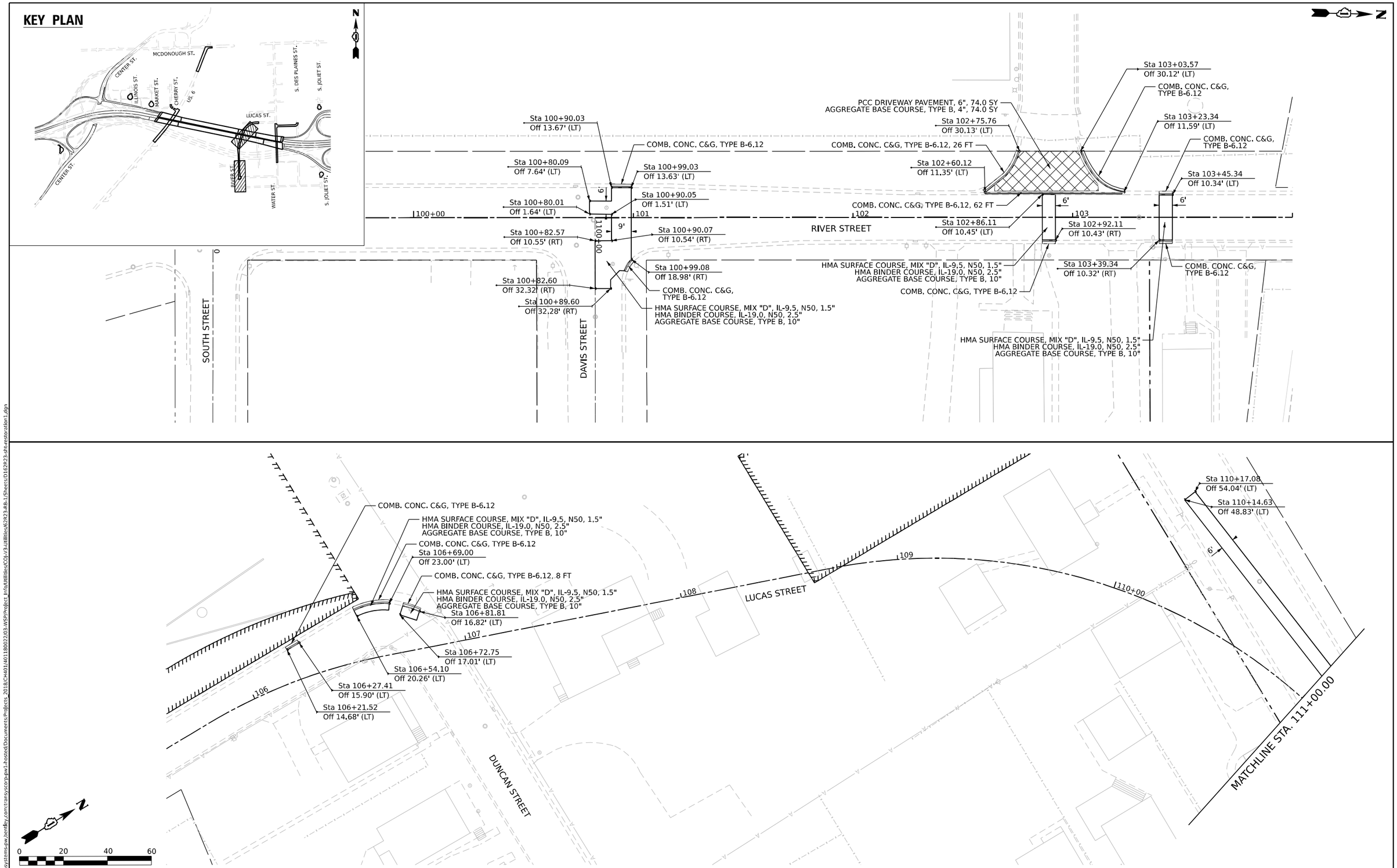

MODEL: Default
FILE NAME: pw://transystems-pw.bentley.com:transyscorp-pw1-hosted/Documents/Projects_2018/CH401/401180022/03-WSP/Project_Info/Utilities/COJ-v3-Utilities/62R23-RB-1/Sheets/0162R23-sht-restoration1.dgn

V3 Companies
7325 Janes Avenue
Woodridge, IL 60517
630.724.9200 phone
630.724.9202 fax
www.v3co.com

USER NAME = dpung	DESIGNED - CD	REVISED -	
	DRAWN - DP	REVISED -	
PLOT SCALE =	CHECKED - JH	REVISED -	
PLOT DATE = 11/5/2025	DATE - 11/7/2025	REVISED -	

STATE OF ILLINOIS
DEPARTMENT OF TRANSPORTATION

JOLIET ROADWAY PLAN

SCALE: 1"=20' | SHEET 1 OF 6 SHEETS | STA. TO STA.

F.A.I. RTE.	SECTION	COUNTY	TOTAL SHEETS	SHEET NO.
80	FAI 80 21 STRUCTURE 2	WILL	1230	123
		CONTRACT NO. 62R23		
	ILLINOIS	FED. AID PROJECT		

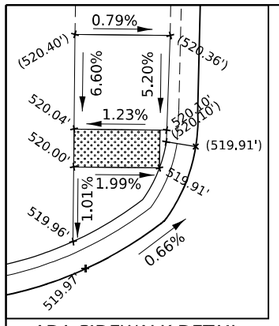

ADA SIDEWALK DETAIL

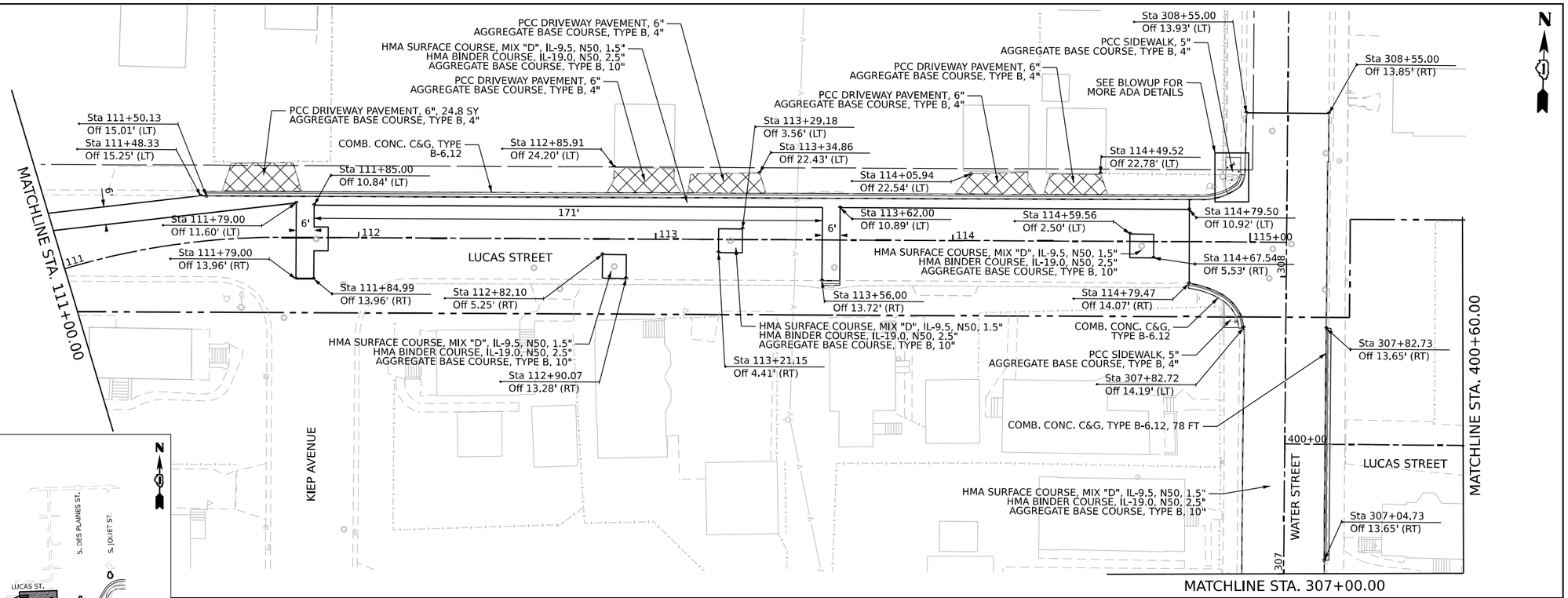

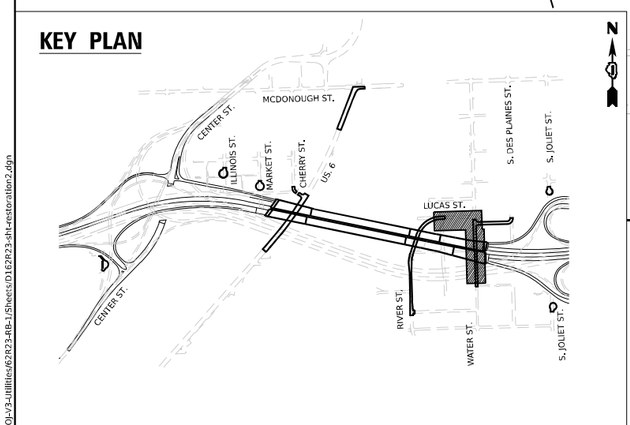

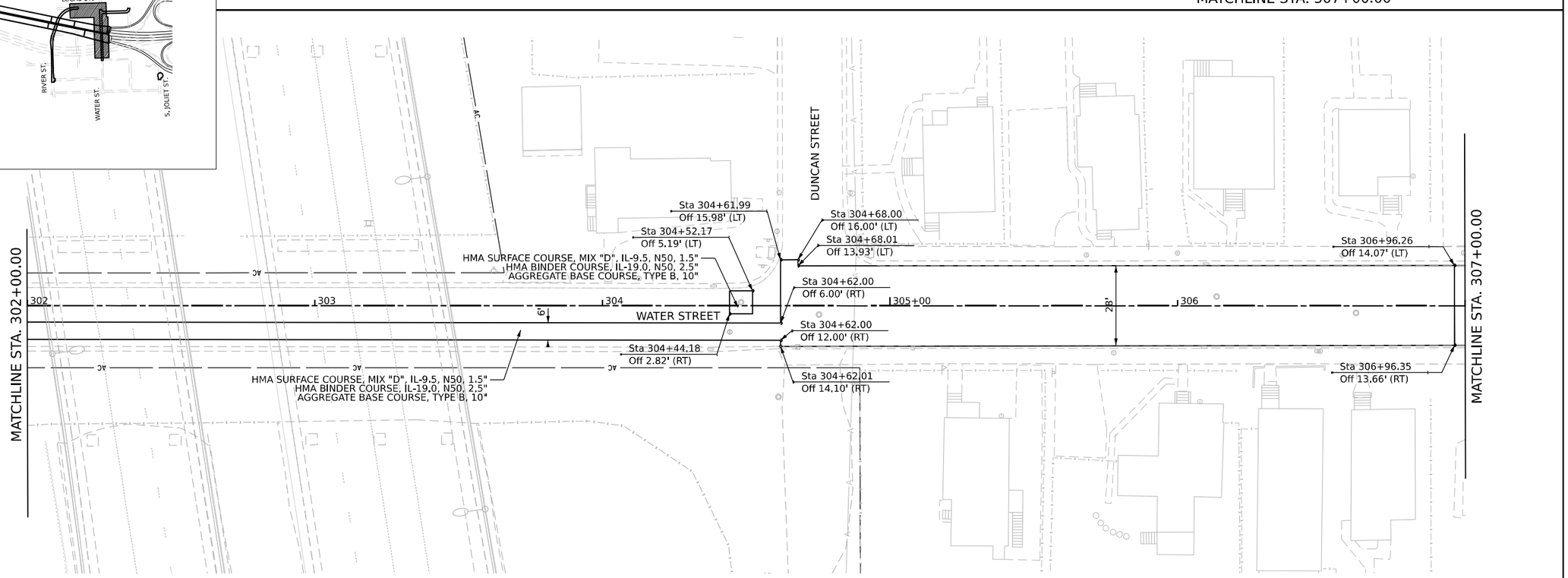

N

0 20 40 60

SCALE IN FEET

MODEL: Default
FILE NAME: pw://transystems-pw.bentley.com:transyscorp-pw1-hosted/Documents/Projects_2018/CH401/401180022/03-WSP/Project Info/Utilities/CD-V3-Utilities/62R23-RB-1/Sheets/D162R23-sht-restoration2.dgn

V3 Companies
7325 Janes Avenue
Woodridge, IL 60517
630.724.9200 phone
630.724.9202 fax
www.v3co.com

USER NAME = dpung	DESIGNED - CD	REVISED -	
	DRAWN - DP	REVISED -	
PLOT SCALE =	CHECKED - JH	REVISED -	
PLOT DATE = 11/5/2025	DATE - 11/7/2025	REVISED -	

STATE OF ILLINOIS
DEPARTMENT OF TRANSPORTATION

JOLIET ROADWAY PLAN

SCALE: 1"=20' | SHEET 2 OF 6 SHEETS | STA. TO STA.

F.A.I. RTE.	SECTION	COUNTY	TOTAL SHEETS	SHEET NO.
80	FAI 80 21 STRUCTURE 2	WILL	1230	124
		CONTRACT NO. 62R23		
		ILLINOIS	FED. AID PROJECT	

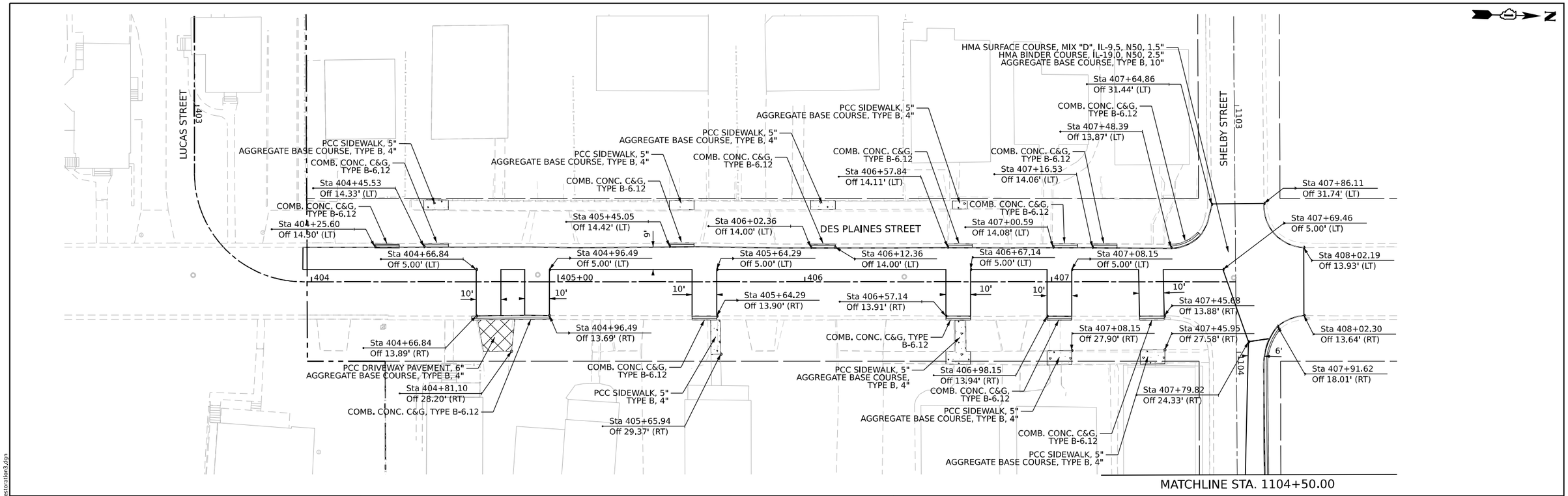

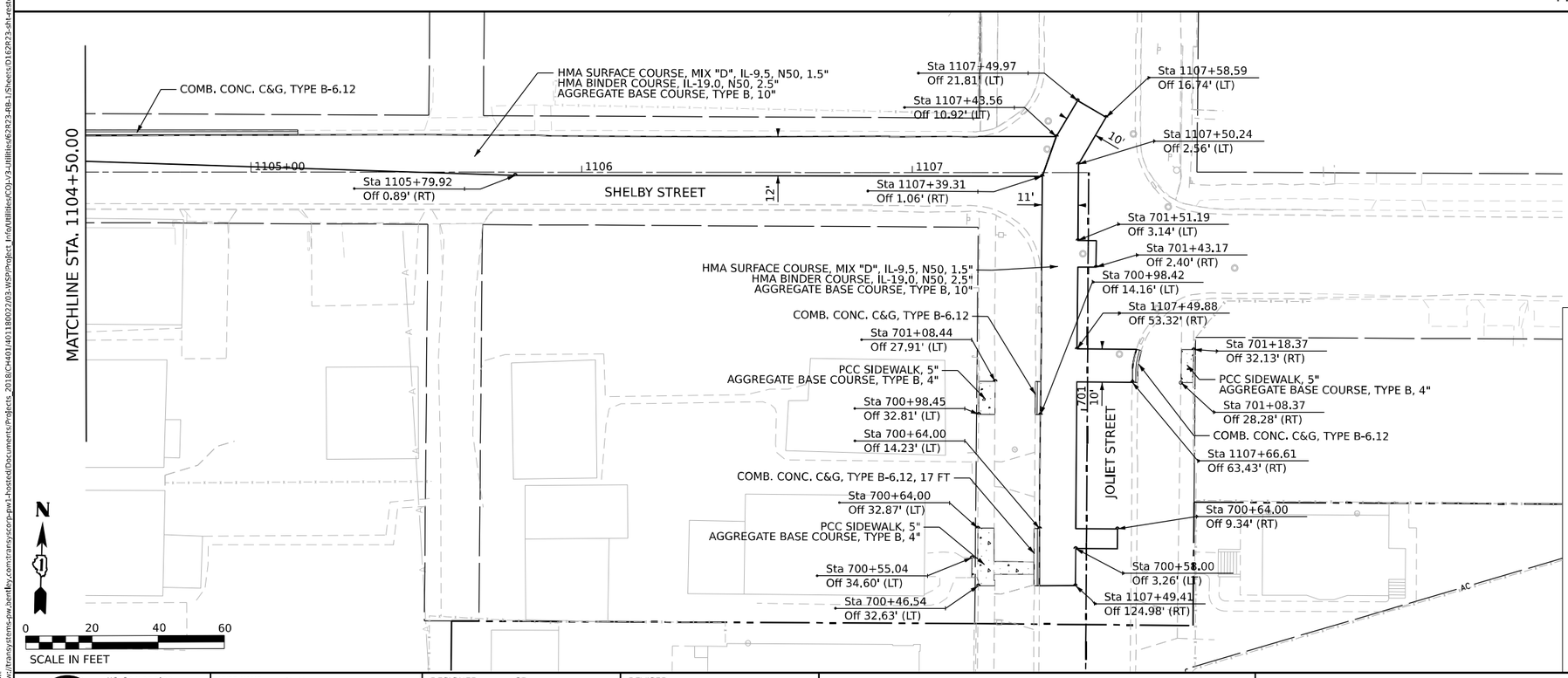

KEY PLAN

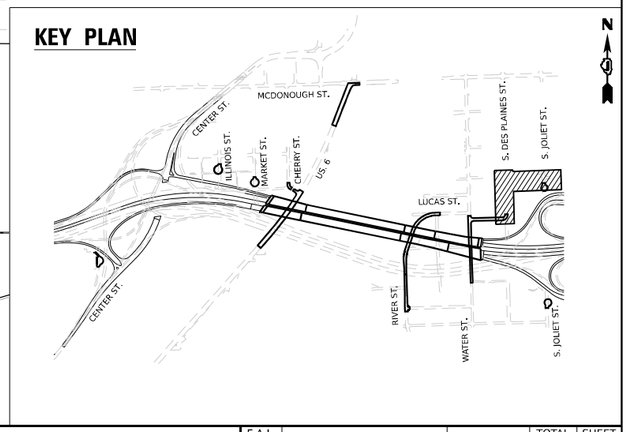

MODEL: Default
FILE NAME: pw://transystems-pw.bentley.com:transyscorp-pw1-hosted/Documents/Projects_2018/CH401/401180022/03-WSP/Project Info/Utilities/CO/-V3-Utilities/62R23-RB-1/Sheets/D162R23-sht-restoration3.dgn

V3 Companies
7325 Janes Avenue
Woodridge, IL 60517
630.724.9200 phone
630.724.9202 fax
www.v3co.com

USER NAME = dpung	DESIGNED - CD	REVISED -	
	DRAWN - DP	REVISED -	
PLOT SCALE =	CHECKED - JH	REVISED -	
PLOT DATE = 11/5/2025	DATE - 11/7/2025	REVISED -	

STATE OF ILLINOIS
DEPARTMENT OF TRANSPORTATION

JOLIET ROADWAY PLAN

SCALE: 1"=20' | SHEET 3 OF 6 SHEETS | STA. TO STA.

F.A.I. RTE.	SECTION	COUNTY	TOTAL SHEETS	SHEET NO.
80	FAI 80 21 STRUCTURE 2	WILL	1230	125

CONTRACT NO. 62R23

ILLINOIS | FED. AID PROJECT

MATCHLINE - SEE SHEET 124

Sta 301+93.00
Off 6.27' (LT)

Sta 301+93.00
Off 5.68' (RT)

COMB. CONC. C&G, TYPE B-6.12

Sta 301+87.00
Off 3.00' (RT)

Sta 301+41.01
Off 11.60' (RT)

Sta 301+41.01
Off 14.08' (RT)

Sta 301+53.99
Off 6.36' (LT)

Sta 301+44.00
Off 3.00' (RT)

PCC DRIVEWAY PAVEMENT, 6", 10.9 SY
AGGREGATE BASE COURSE, TYPE B, 4"

COMB. CONC. C&G, TYPE B-6.12

Sta 2000+25.18
Off 15.67' (LT)

Sta 301+22.69
Off 3.00' (RT)

HMA SURFACE COURSE, MIX "D", IL-9.5, N50, 1.5"
HMA BINDER COURSE, IL-19.0, N50, 2.5"
AGGREGATE BASE COURSE, TYPE B, 10"

Sta 2000+25.41
Off 2.45' (RT)

2000+00

2001

2002

2003

Sta 301+22.69
Off 6.38' (LT)

Sta 301+12.69
Off 3.00' (RT)

Sta 300+90.34
Off 9.00' (RT)

COMB. CONC. C&G, TYPE B-6.12

COMB. CONC. C&G, TYPE B-6.12

PCC SIDEWALK, 5"
AGGREGATE BASE COURSE, TYPE B, 4"

Sta 300+93.73
Off 6.42' (LT)

Sta 300+81.20
Off 22.60' (RT)

Sta 300+81.25
Off 14.00' (RT)

Sta 300+53.76
Off 6.48' (LT)

COMB. CONC. C&G, TYPE B-6.12

Sta 300+47.77
Off 3.00' (RT)

Sta 300+25.86
Off 3.00' (RT)

Sta 300+17.94
Off 9.00' (RT)

COMB. CONC. C&G, TYPE B-6.12

COMB. CONC. C&G, TYPE B-6.12

PCC SIDEWALK, 5"
AGGREGATE BASE COURSE, TYPE B, 4"

Sta 300+17.36
Off 23.67' (RT)

Sta 300+19.85
Off 6.53' (LT)

Sta 300+11.94
Off 13.92' (RT)

300+00

WATER STREET

Sta 299+38.00
Off 9.00' (RT)

COMB. CONC. C&G, TYPE B-6.12

Sta 299+19.10
Off 9.00' (RT)

COMB. CONC. C&G, TYPE B-6.12

Sta 299+07.31
Off 3.00' (RT)

COMB. CONC. C&G, TYPE B-6.12

Sta 298+96.24
Off 9.00' (RT)

299

Sta 298+91.93
Off 13.31' (RT)

Sta 298+93.76
Off 3.00' (RT)

Sta 298+87.69
Off 9.07' (RT)

1106

DAVIS STREET

HMA SURFACE COURSE, MIX "D", IL-9.5, N50, 1.5"
HMA BINDER COURSE, IL-19.0, N50, 2.5"
AGGREGATE BASE COURSE, TYPE B, 10"

Sta 1304+42.61
Off 15.03' (RT)

Sta 1304+39.47
Off 13.87' (RT)

COMB. CONC. C&G, TYPE B-6.12

Sta 1304+31.18
Off 13.45' (LT)

COMB. CONC. C&G, TYPE B-6.12

Sta 1304+27.79
Off 27.44' (RT)

PCC DRIVEWAY PAVEMENT, 6"
AGGREGATE BASE COURSE, TYPE B, 4"

Sta 1304+01.63
Off 5.89' (RT)

1304

Sta 1304+11.10
Off 13.84' (RT)

HMA SURFACE COURSE, MIX "D", IL-9.5, N50, 1.5"
HMA BINDER COURSE, IL-19.0, N50, 2.5"
AGGREGATE BASE COURSE, TYPE B, 10"

Sta 1303+93.64
Off 13.90' (RT)

COMB. CONC. C&G, TYPE B-6.12

COMB. CONC. C&G, TYPE B-6.12

Sta 1303+75.80
Off 14.10' (LT)

Sta 1303+75.80
Off 13.92' (RT)

HMA SURFACE COURSE, MIX "D", IL-9.5, N50, 1.5"
HMA BINDER COURSE, IL-19.0, N50, 2.5"
AGGREGATE BASE COURSE, TYPE B, 10"

Sta 1303+37.97
Off 13.89' (LT)

Sta 1303+37.97
Off 13.96' (RT)

COMB. CONC. C&G, TYPE B-6.12

COMB. CONC. C&G, TYPE B-6.12

Sta 1303+19.24
Off 27.05' (RT)

HMA SURFACE COURSE, MIX "D", IL-9.5, N50, 1.5"
HMA BINDER COURSE, IL-19.0, N50, 2.5"
AGGREGATE BASE COURSE, TYPE B, 10"

1303

PCC DRIVEWAY PAVEMENT, 6"
AGGREGATE BASE COURSE, TYPE B, 4"

HMA SURFACE COURSE, MIX "D", IL-9.5, N50, 1.5"
HMA BINDER COURSE, IL-19.0, N50, 2.5"
AGGREGATE BASE COURSE, TYPE B, 10"

COMB. CONC. C&G, TYPE B-6.12

COMB. CONC. C&G, TYPE B-6.12

Sta 1302+67.41
Off 13.84' (RT)

PCC SIDEWALK, 5", 66.1 SF
AGGREGATE BASE COURSE, TYPE B, 4"

Sta 1302+67.41
Off 14.01' (LT)

COMB. CONC. C&G, TYPE B-6.12

Sta 1302+49.14
Off 6.92' (RT)

Sta 1302+47.66
Off 13.92' (RT)

HMA SURFACE COURSE, MIX "D", IL-9.5, N50, 1.5"
HMA BINDER COURSE, IL-19.0, N50, 2.5"
AGGREGATE BASE COURSE, TYPE B, 10"

Sta 1302+44.90
Off 11.17' (RT)

1302

DES PLAINES STREET

KEY PLAN

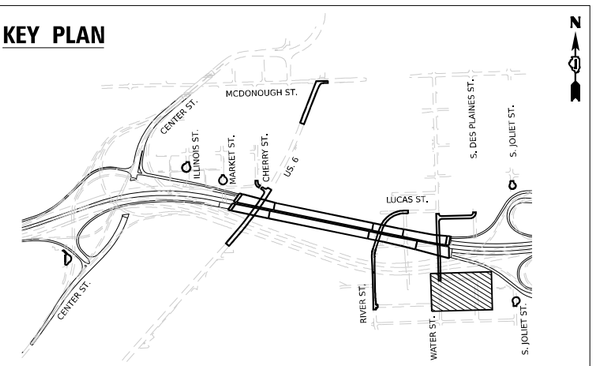

N

0 20 40 60
SCALE IN FEET

MODEL: Default
FILE NAME: pw://transystems-pw.bentley.com:transyscorp-pw1-hosted/Documents/Projects_2018/CH401/401180022/03-WSP/Project_Info/Utilities/CO1-V3-Utilities/62R23-RB-1/Sheets/D162R23-sht-restoration4.dgn

V3 Companies
7325 Janes Avenue
Woodridge, IL 60517
630.724.9200 phone
630.724.9202 fax
www.v3co.com

USER NAME = dpung	DESIGNED - CD	REVISED -	
	DRAWN - DP	REVISED -	
PLOT SCALE =	CHECKED - JH	REVISED -	
PLOT DATE = 11/5/2025	DATE - 11/7/2025	REVISED -	

STATE OF ILLINOIS
DEPARTMENT OF TRANSPORTATION

JOLIET ROADWAY PLAN

SCALE: 1"=20' | SHEET 4 OF 6 SHEETS | STA. TO STA.

F.A.I. RTE.	SECTION	COUNTY	TOTAL SHEETS	SHEET NO.
80	FAI 80 21 STRUCTURE 2	WILL	1230	126

CONTRACT NO. 62R23

ILLINOIS | FED. AID PROJECT

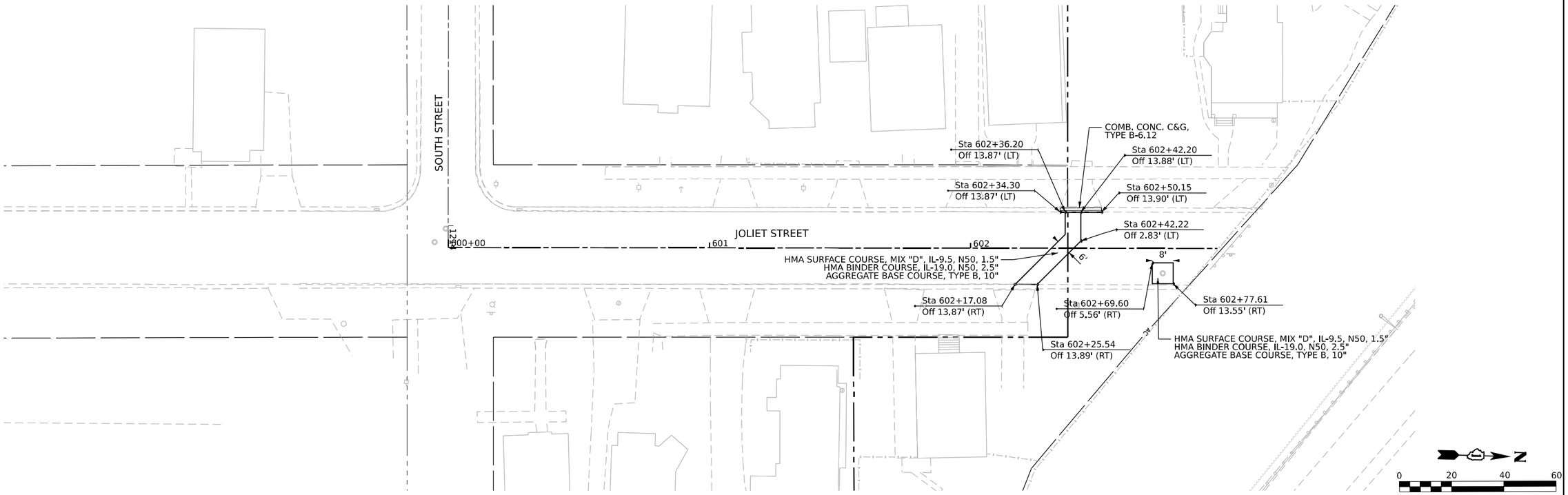

KEY PLAN

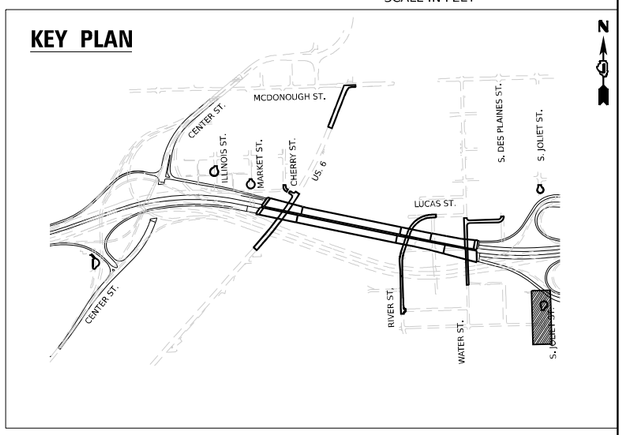

MODEL: Default
FILE NAME: pw://transystems-pw.bentley.com:transyscorp-pw1-hosted/Documents/Projects_2018/CH401/401180022/03-WSP/Project Info/Utilities/CO)-V3-Utilities/62R23-RB-1/Sheets/D162R23-sht-restoration5.dgn

V3 Companies
7325 Janes Avenue
Woodridge, IL 60517
630.724.9200 phone
630.724.9202 fax
www.v3co.com

USER NAME = dpung	DESIGNED - CD	REVISED -	
	DRAWN - DP	REVISED -	
PLOT SCALE =	CHECKED - JH	REVISED -	
PLOT DATE = 11/5/2025	DATE - 11/7/2025	REVISED -	

STATE OF ILLINOIS
DEPARTMENT OF TRANSPORTATION

JOLIET ROADWAY PLAN

SCALE: 1"=20' | SHEET 5 OF 6 SHEETS | STA. TO STA.

F.A.I. RTE.	SECTION	COUNTY	TOTAL SHEETS	SHEET NO.
80	FAI 80 21 STRUCTURE 2	WILL	1230	127
		CONTRACT NO. 62R23		
	ILLINOIS	FED. AID PROJECT		

Sta 1310+14.70
Off 36.62' (LT)

PCC DRIVEWAY PAVEMENT, 8"
AGGREGATE BASE COURSE, TYPE B, 4"

Sta 1310+14.61
Off 16.32' (LT)

PCC DRIVEWAY PAVEMENT, 8"
AGGREGATE BASE COURSE, TYPE B, 4"

Sta 1310+54.52
Off 20.69' (LT)

PCC DRIVEWAY PAVEMENT, 8"
AGGREGATE BASE COURSE, TYPE B, 4"

Sta 1312+79.55
Off 32.40' (LT)

PCC SIDEWALK, 5"
AGGREGATE BASE COURSE, TYPE B, 4"

Sta 1310+00.62
Off 17.57' (LT)

Sta 1310+42.36
Off 9.94' (LT)

Sta 1311+31.22
Off 32.25' (LT)

HMA SURFACE COURSE, MIX "D", IL-9.5, N50, 2.0"
HMA BINDER COURSE, IL-19.5, N50, 10.0"
AGGREGATE BASE COURSE, TYPE B, 10"

Sta 1312+73.03
Off 20.48' (LT)

Sta 1310+48.69
Off 3.89' (LT)

1308 1309 1310+00 1311 1312 1313 1314

Sta 1309+94.81
Off 1.96' (RT)

Sta 1310+39.00
Off 12.50' (RT)

Sta 1310+80.87
Off 18.50' (RT)

MCDONOUGH STREET

Sta 1312+67.03
Off 12.50' (RT)

Sta 1312+91.24
Off 12.50' (RT)

Sta 1312+99.09
Off 20.34' (RT)

COMB. CONC. C&G, TYPE B-6.12

Sta 1310+19.99
Off 18.50' (RT)

Sta 1310+80.87
Off 20.39' (RT)

Sta 1312+31.54
Off 19.82' (RT)

Sta 1312+90.53
Off 20.28' (RT)

COMB. CONC. C&G,
TYPE B-6.12,

HMA SURFACE COURSE, MIX "D", IL-9.5, N50, 4.0"
AGGREGATE BASE COURSE, TYPE B, 4"

Sta 1310+03.73
Off 18.50' (RT)

Sta 1310+43.06
Off 36.80' (RT)

PCC SIDEWALK, 5"
AGGREGATE BASE COURSE, TYPE B, 4"

Sta 1312+39.04
Off 32.71' (RT)

Sta 232+92.50
Off 15.50' (RT)

Sta 232+83.76
Off 9.50' (RT)

HMA SURFACE COURSE, MIX "D", IL-9.5, N50, 4.0"
AGGREGATE BASE COURSE, TYPE B, 4"

Sta 232+71.87
Off 21.38' (RT)

Sta 232+87.50
Off 31.50' (RT)

HMA SURFACE COURSE, MIX "D", IL-9.5, N50, 4.0", 3 SY
AGGREGATE BASE COURSE, TYPE B, 4", 3 SY

1233 1232 1231

US 6 (RAILROAD STREET)

KEY PLAN

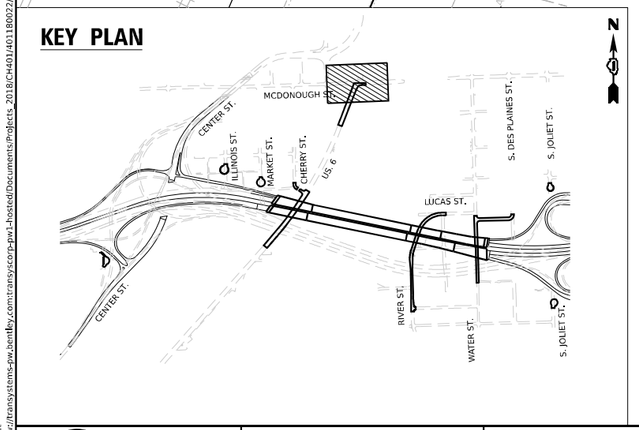

N

0 20 40 60
SCALE IN FEET

MODEL: Default
FILE NAME: pw://transystems-pw.bentley.com:transyscorp-pw1-hosted/Documents/Projects_2018/CH401/401180022/03-WSP/Project_Info/Utilities/CO-v3-Utilities/62R23-RB-1/Sheets/D162R23-sht-restoration6.dgn

V3 Companies
7325 Janes Avenue
Woodridge, IL 60517
630.724.9200 phone
630.724.9202 fax
www.v3co.com

USER NAME = dpung	DESIGNED - CD	REVISED -	
	DRAWN - DP	REVISED -	
PLOT SCALE =	CHECKED - JH	REVISED -	
PLOT DATE = 11/5/2025	DATE - 11/7/2025	REVISED -	

STATE OF ILLINOIS
DEPARTMENT OF TRANSPORTATION

JOLIET ROADWAY PLAN

SCALE: 1"=20' | SHEET 6 OF 6 SHEETS | STA. TO STA.

F.A.I. RTE.	SECTION	COUNTY	TOTAL SHEETS	SHEET NO.
80	FAI 80 21 STRUCTURE 2	WILL	1230	128
		CONTRACT NO. 62R23		
		ILLINOIS	FED. AID PROJECT	

**CHICAGO RAMP C SLOPE AND SHOULDER SLOPE VARY FROM
2.00% AT CHICAGO RAMP C STA. 20+70.00 TO
6.00% AT CHICAGO RAMP C STA. 19+42.00

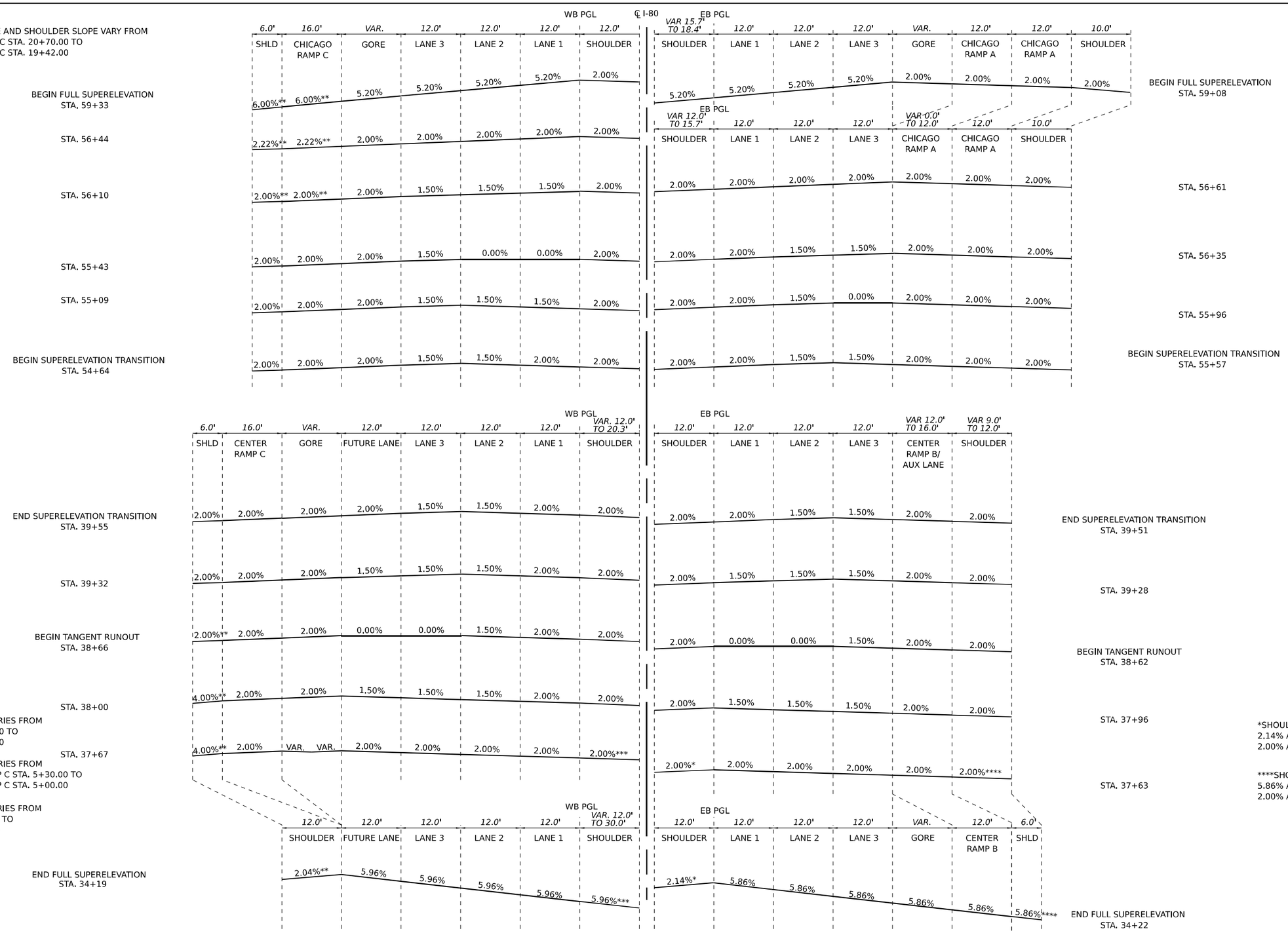

**SHOULDER SLOPE VARIES FROM
2.04% AT STA. 34+19.00 TO
2.00% AT STA. 34+29.00

**SHOULDER SLOPE VARIES FROM
4.00% AT CENTER RAMP C STA. 5+30.00 TO
2.00% AT CENTER RAMP C STA. 5+00.00

***SHOULDER SLOPE VARIES FROM
5.96% AT STA. 34+19.00 TO
2.00% AT STA. 37+67.00

*SHOULDER SLOPE VARIES FROM
2.14% AT STA. 34+22.00 TO
2.00% AT STA. 34+37.00

****SHOULDER SLOPE VARIES FROM
5.86% AT STA. 34+22.00 TO
2.00% AT STA. 37+63.00

PROPOSED I-80 SUPERELEVATION SECTION

N.T.S.

NOTE: SEE GORE DETAIL SHEETS FOR RAMP GORE CROSS-SLOPE INFORMATION.

MODE: Default
FILE NAME: pw://transystems-pw.bentley.com:transyscorp-pw1-hosted/Documents/Projects_2018/CH401/401180022/03-WSP/CAD/62R23-rtB-1/Sheets/CivilD16R23-sht-SuperTransition.dgn

WSP USA Inc.
30 N. LASALLE STREET
SUITE 4200
CHICAGO, IL 60602
TEL: (312) 782-8130

USER NAME = USGP718052	DESIGNED - YW	REVISED -
	DRAWN - YW	REVISED -
PLOT SCALE = 20.000 ' / in.	CHECKED - KSD	REVISED -
PLOT DATE = 11/5/2025	DATE - 11/7/2025	REVISED -

STATE OF ILLINOIS
DEPARTMENT OF TRANSPORTATION

SUPERELEVATION TRANSITION SECTIONS
I-80

SCALE: N.T.S. | SHEET 1 OF 3 SHEETS | STA. | TO STA.

F.A.I. RTE.	SECTION	COUNTY	TOTAL SHEETS	SHEET NO.
80	FAI 80 21 STRUCTURE 2	WILL	1230	129
		CONTRACT NO. 62R23		
	ILLINOIS	FED. AID PROJECT		

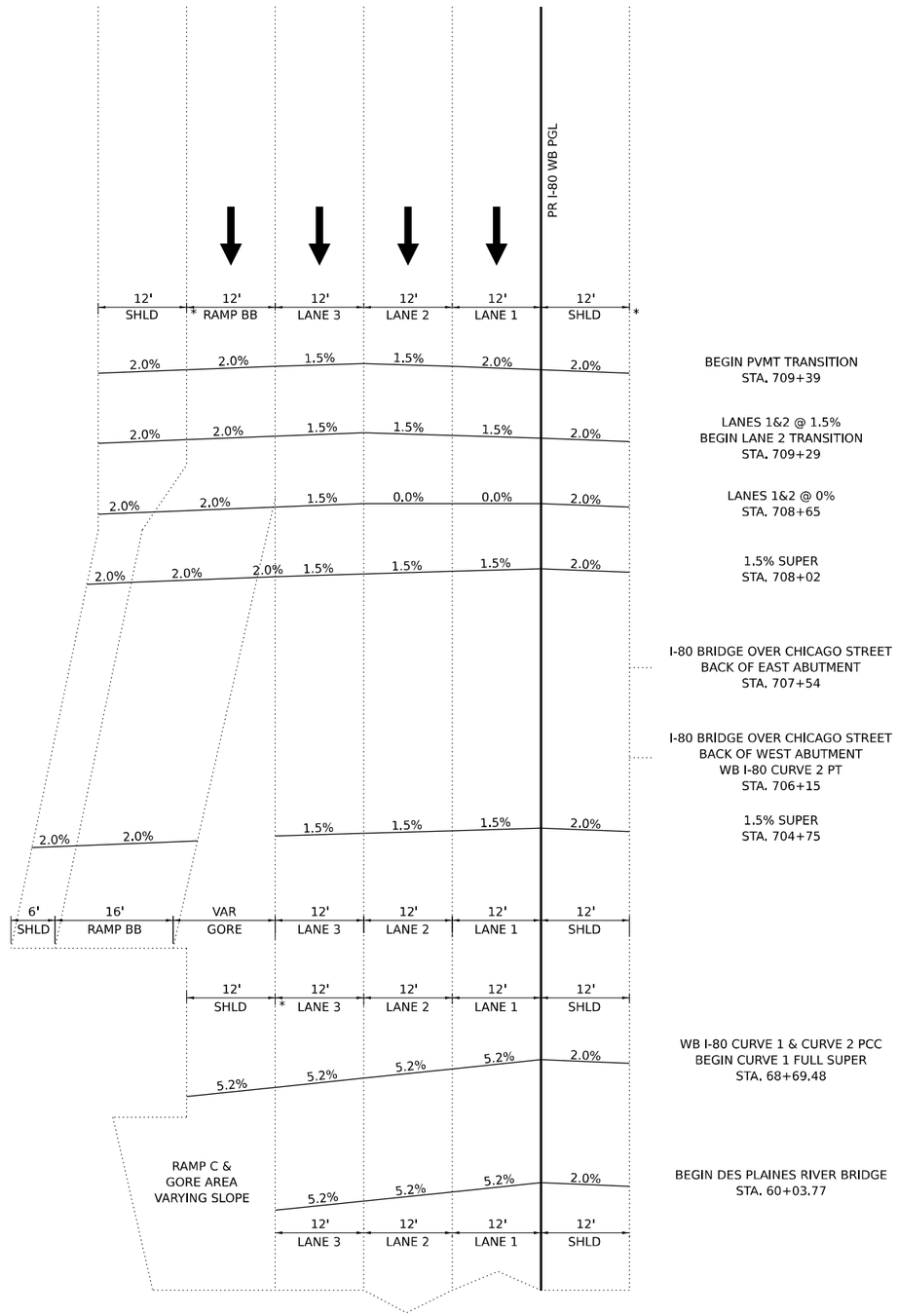

WESTBOUND I-80

FOR REFERENCE ONLY

FOR REFERENCE ONLY

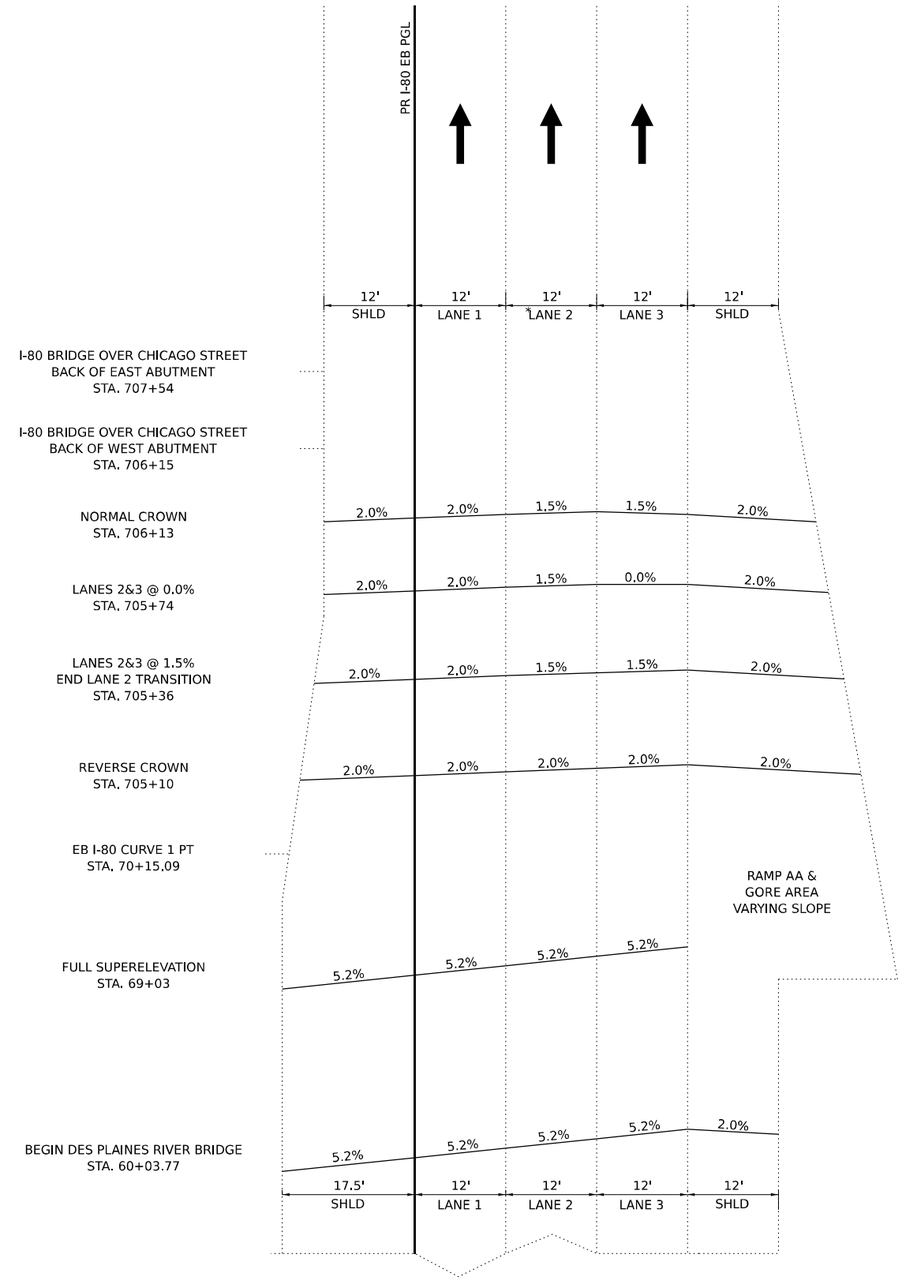

EASTBOUND I-80

MODEL: Default
FILE NAME: pw://transystems-pw.bentley.com:transyscorp-pw1-hosted/Documents/Projects_2018/CH401/401180022/03-WSP/CAD/62R23-rtB-1/Sheets/CivilD162R23-sht-EAST-supers-01

BURNS McDONNELL	USER NAME = USGP718052	DESIGNED - JAP	REVISED -	STATE OF ILLINOIS DEPARTMENT OF TRANSPORTATION
		DRAWN - TMM	REVISED -	
	PLOT SCALE = 40.000 ' / in.	CHECKED - JIR	REVISED -	
	PLOT DATE = 11/5/2025	DATE - 11/7/2025	REVISED -	

SUPERELEVATION TRANSITION SECTIONS
I–80 MAINLINE

SCALE: NTS | SHEET 2 OF 3 SHEETS | STA. | TO STA.

F.A.I. RTE.	SECTION	COUNTY	TOTAL SHEETS	SHEET NO.
80	FAI 80 21 STRUCTURE 2	WILL	1230	130
		CONTRACT NO. 62R23		
	ILLINOIS	FED. AID PROJECT		

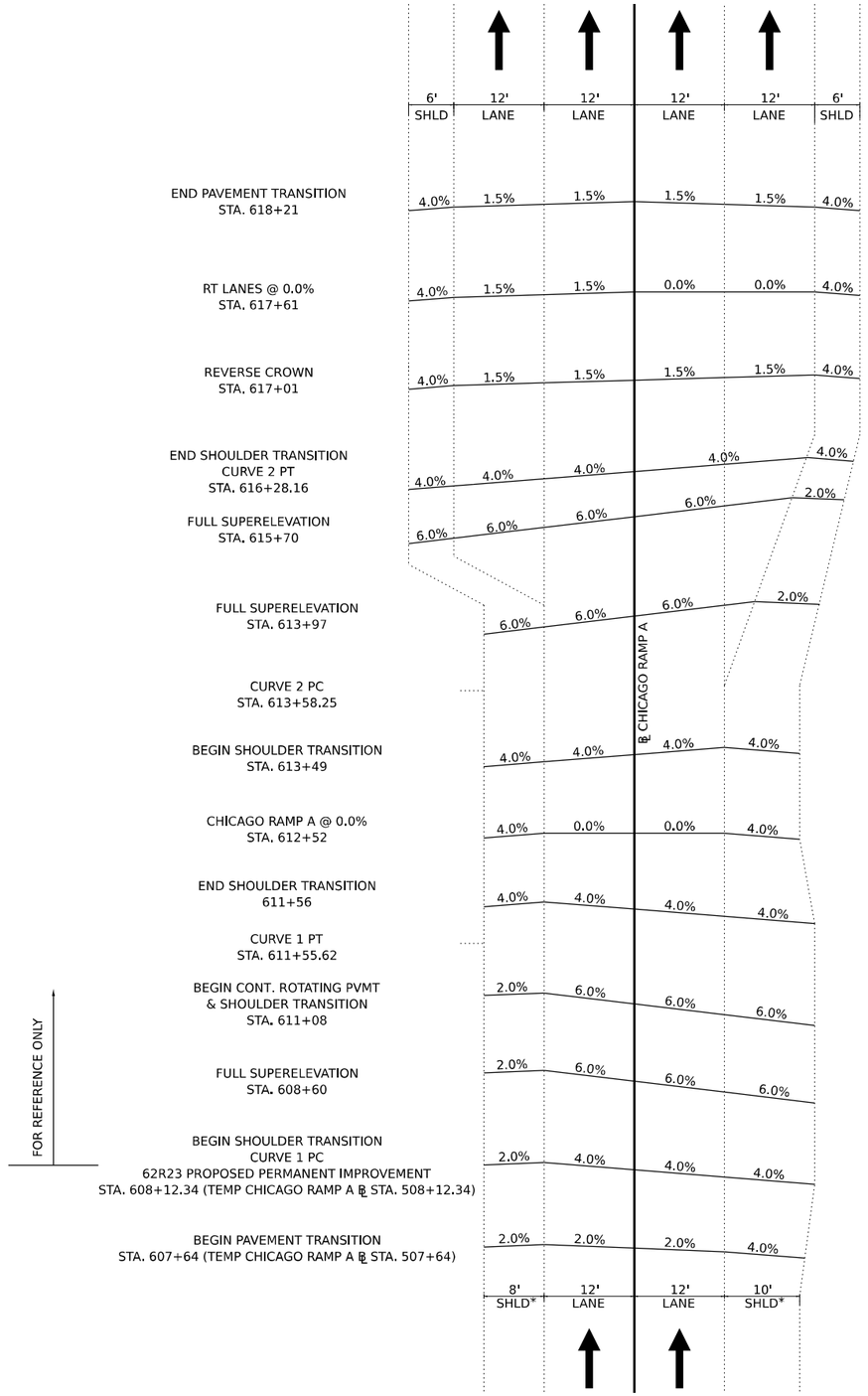

CHICAGO RAMP A

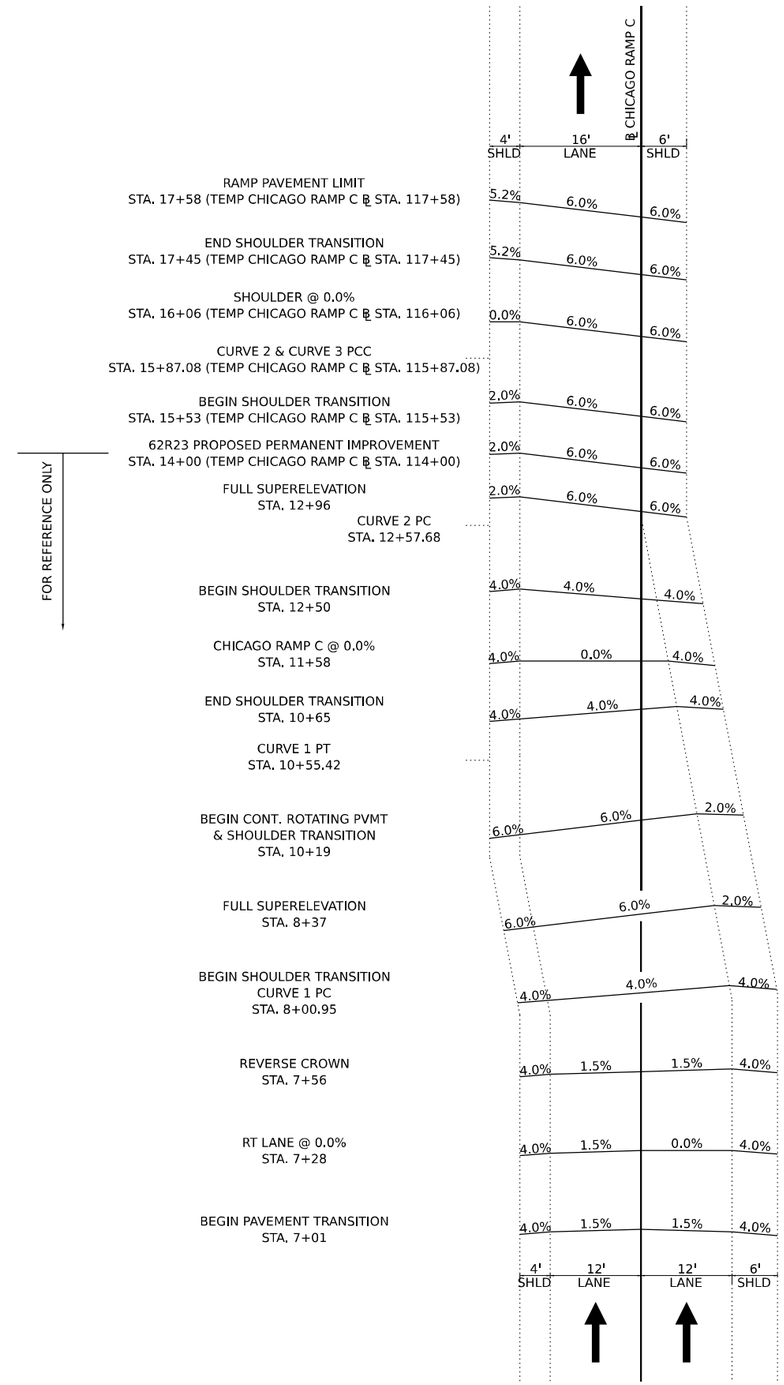

CHICAGO RAMP C

NOTE:
1. ALL STATIONS REFERENCE PROPOSED RAMP ALIGNMENTS UNLESS OTHERWISE NOTED.

*ADDITIONAL RAMP A SHOULDER TRANSITIONS:
2. TRANSITION TEMPORARY CHICAGO RAMP A LEFT SHOULDER FROM STA. 506+00 (-2.0%) TO STA. 506+96 (2.0%) = CHICAGO RAMP A STA. 606+00 (-2.0%) TO STA. 606+96 (2.0%).
3. TRANSITION TEMPORARY CHICAGO RAMP A RIGHT SHOULDER FROM STA. 506+00 (-2.0%) TO STA. 506+48 (-4.0%) = CHICAGO RAMP A STA. 606+00 (-2.0%) TO STA. 606+48 (-4.0%).

MODEL: Default
FILE NAME: pw://transystems-pw.bentley.com:transyscorp-pw1-hosted/Documents/Projects_2018/CH401/401180022/03-WSP/CAD/62R23-RB-1/Sheets/CwllD162R23-ilh-EAST-supers-02

BURNS McDONNELL

USER NAME = USGP718052	DESIGNED - JAP	REVISED -	
	DRAWN - TMM	REVISED -	
PLOT SCALE = 40.000 ' / in.	CHECKED - JIR	REVISED -	
PLOT DATE = 11/5/2025	DATE - 11/7/2025	REVISED -	

STATE OF ILLINOIS
DEPARTMENT OF TRANSPORTATION

SUPERELEVATION TRANSITION SECTIONS
CHICAGO RAMPS A & C

SCALE: NTS | SHEET 3 OF 3 SHEETS | STA. TO STA.

F.A.I. RTE.	SECTION	COUNTY	TOTAL SHEETS	SHEET NO.
80	FAI 80 21 STRUCTURE 2	WILL	1230	131
		CONTRACT NO. 62R23		
	ILLINOIS	FED. AID PROJECT		

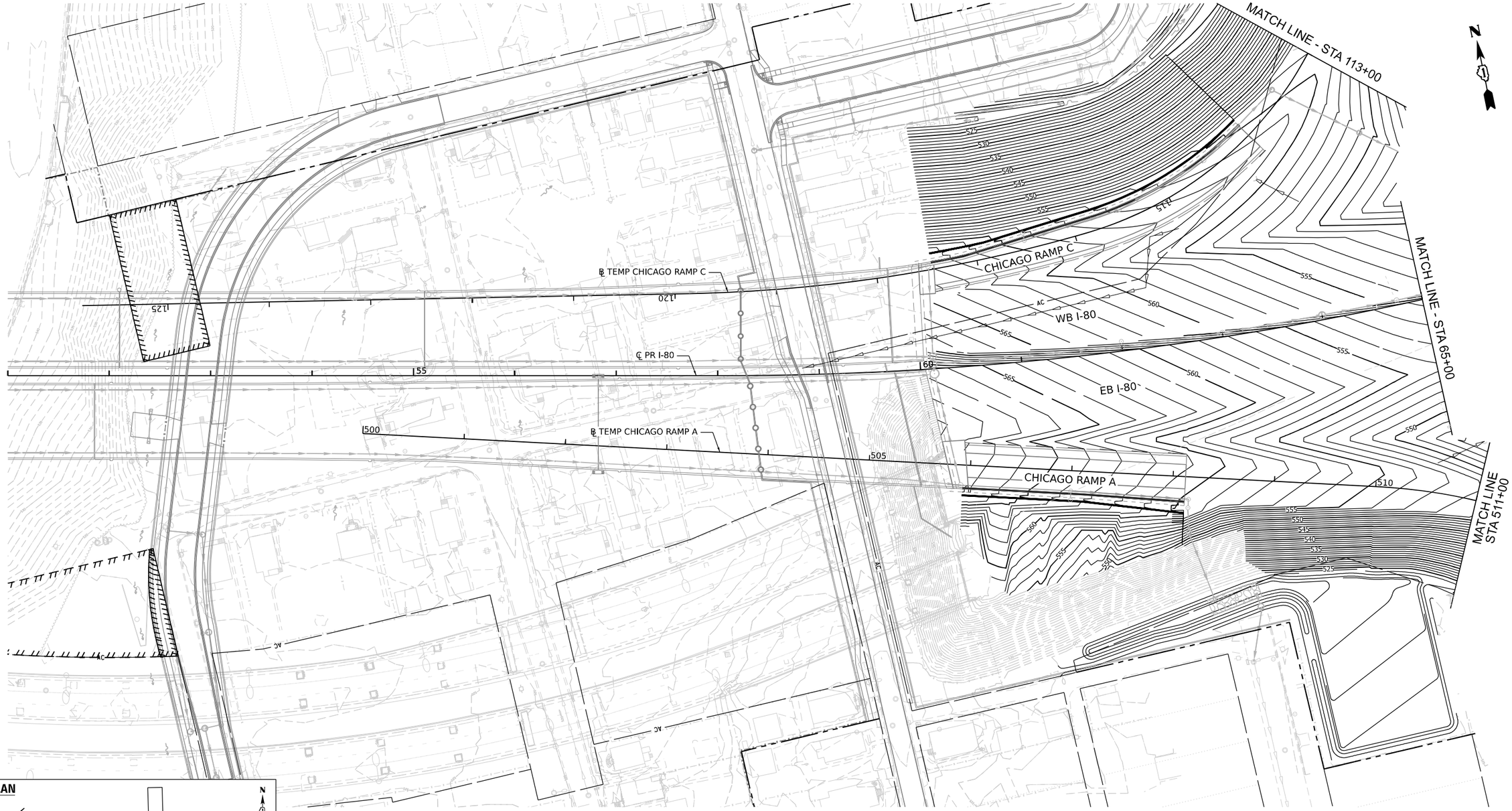

KEY PLAN

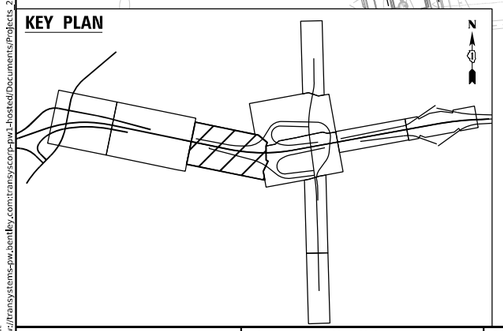

0 50 100 150
SCALE IN FEET

MODEL: Default
FILE NAME: pw://transystems-pw.bentley.com:transyscorp-pw1-hosted/Documents/Projects_2018/CH401/401180022/03-WSP/CAD/62R23-RB-1/Sheets/CivilD162R23-ih-EAST-grading-01.dgn

BURNS McDONNELL

USER NAME = USGP718052	DESIGNED - JAP	REVISED -	
	DRAWN - TMM	REVISED -	
PLOT SCALE = 100.000 ' / in.	CHECKED - JIR	REVISED -	
PLOT DATE = 11/5/2025	DATE - 11/7/2025	REVISED -	

STATE OF ILLINOIS
DEPARTMENT OF TRANSPORTATION

PROPOSED GRADING PLAN
I-80

SCALE: 1" = 50' | SHEET 1 OF 3 SHEETS | STA. TO STA.

F.A.I. RTE.	SECTION	COUNTY	TOTAL SHEETS	SHEET NO.
80	FAI 80 21 STRUCTURE 2	WILL	1230	132
		CONTRACT NO. 62R23		
		ILLINOIS	FED. AID PROJECT	

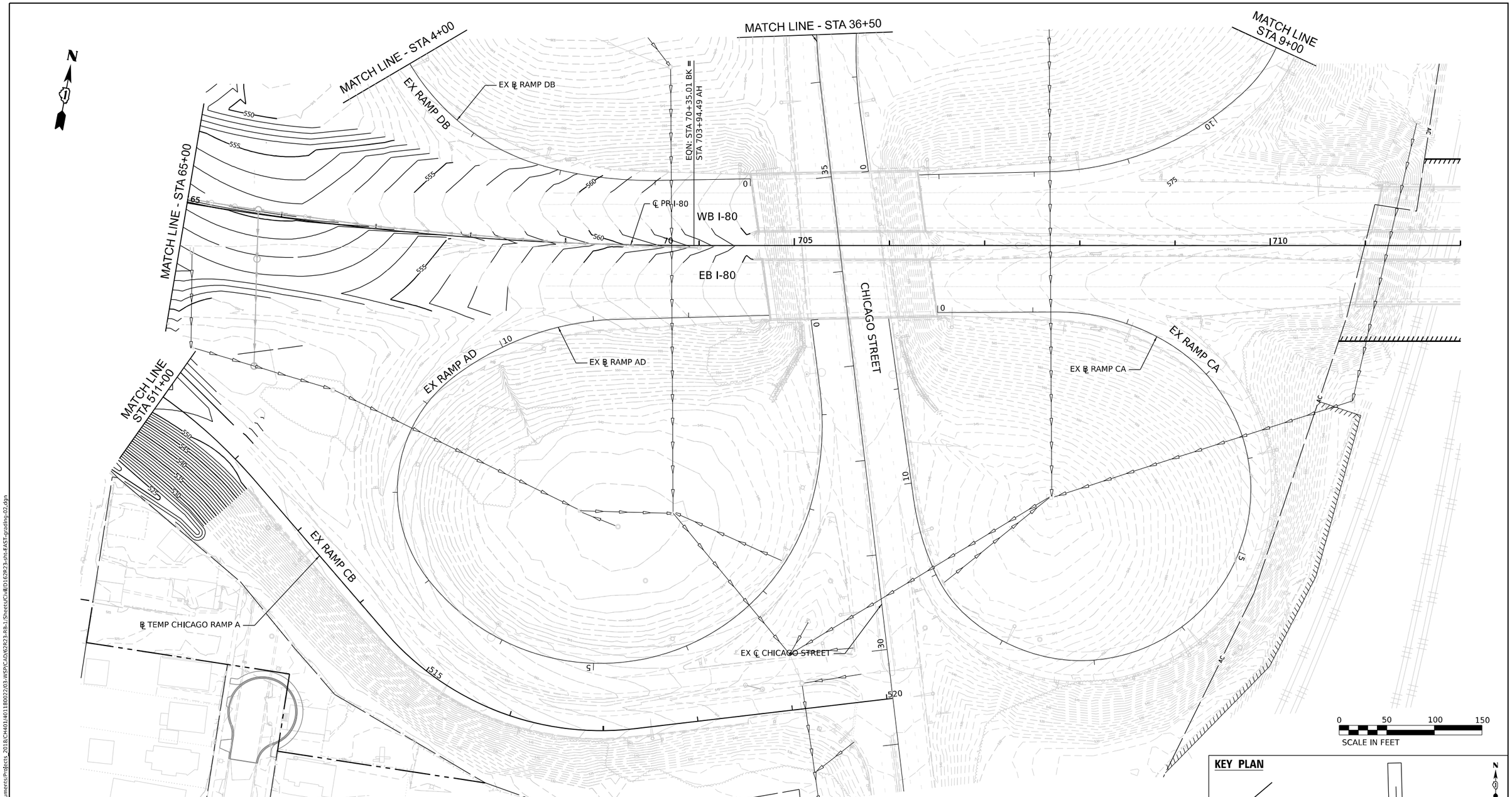

MODEL: Default
FILE NAME: pw://transystems-pw.bentley.com:transyscorp-pw1-hosted/Documents/Projects_2018/CH401/401180022/03-WSP/CAD/62R23-RB-1/Sheets/Civil/D162R23-sht-EAST-grading-02.dgn

BURNS McDONNELL

USER NAME = USGP718052	DESIGNED - JAP	REVISED -	
	DRAWN - TMM	REVISED -	
PLOT SCALE = 100.000 ' / in.	CHECKED - JIR	REVISED -	
PLOT DATE = 11/5/2025	DATE - 11/7/2025	REVISED -	

STATE OF ILLINOIS
DEPARTMENT OF TRANSPORTATION

PROPOSED GRADING PLAN
I–80

SCALE: 1" = 50' | SHEET 2 OF 3 SHEETS | STA. TO STA.

F.A.I. RTE.	SECTION	COUNTY	TOTAL SHEETS	SHEET NO.
80	FAI 80 21 STRUCTURE 2	WILL	1230	133
		CONTRACT NO. 62R23		
	ILLINOIS	FED. AID PROJECT		

MODEL: Default
FILE NAME: pw://transystems-pw.bentley.com:transyscorp-pw1-hosted/Documents/Projects_2018/CH401/401180022/03-WSP/CAD/62R23-RB-1/Sheets/Civil/D162R23-sht-EAST-grading-03.dgn

BURNS McDONNELL	USER NAME = USGP718052	DESIGNED - JAP	REVISED -	STATE OF ILLINOIS DEPARTMENT OF TRANSPORTATION	PROPOSED GRADING PLAN I-80			F.A.I. RTE.	SECTION	COUNTY	TOTAL SHEETS	SHEET NO.
		DRAWN - TMM	REVISED -					80	FAI 80 21 STRUCTURE 2	WILL	1230	134
	PLOT SCALE = 100.000 ' / in.	CHECKED - JIR	REVISED -							CONTRACT NO. 62R23		
	PLOT DATE = 11/5/2025	DATE - 11/7/2025	REVISED -		SCALE: 1" = 50'	SHEET 3 OF 3 SHEETS	STA. TO STA.		ILLINOIS	FED. AID PROJECT		

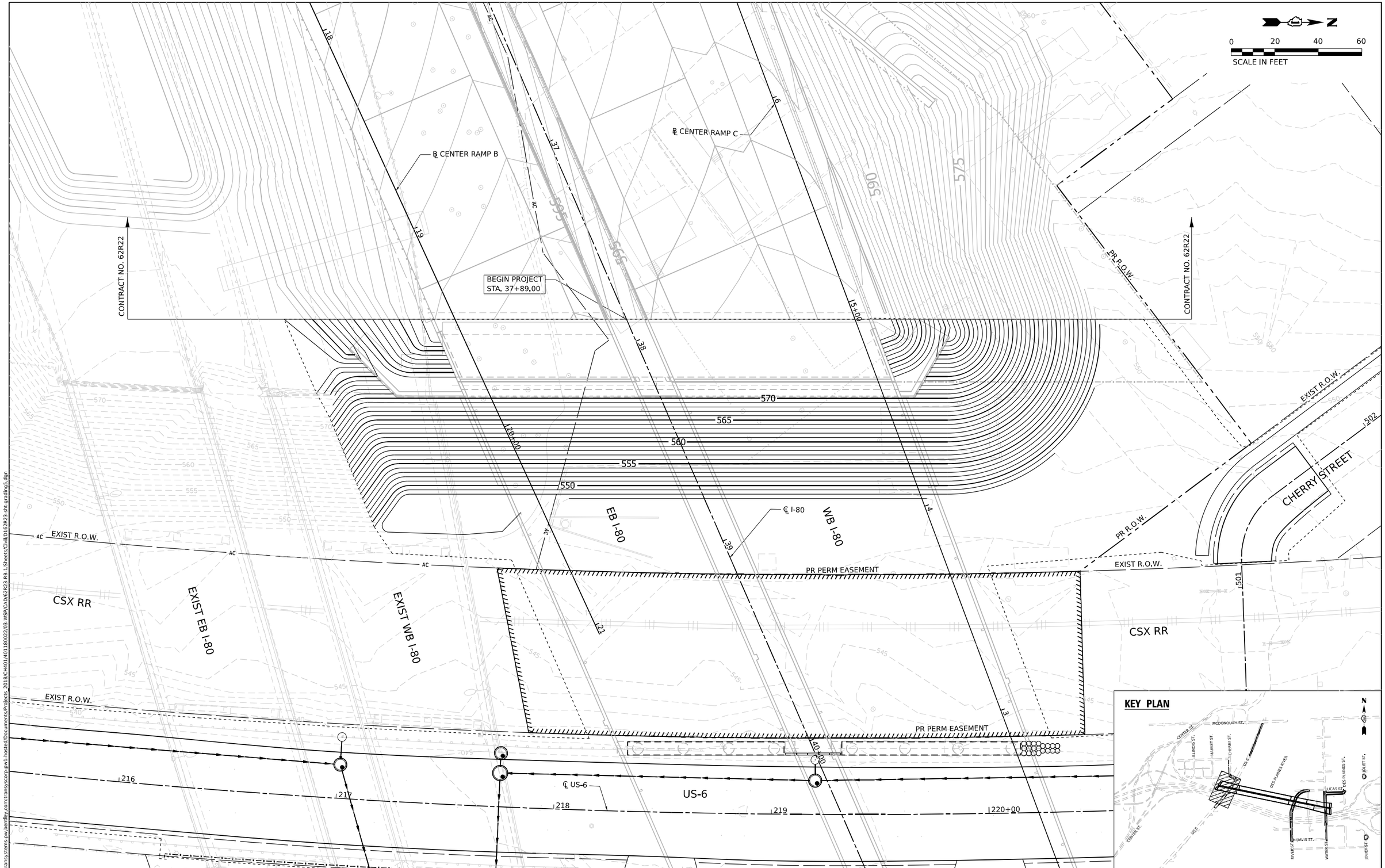

MODEL: Default
FILE NAME: pw://transystems-pw.bentley.com:transyscorp-pw1-hosted/Documents/Projects_2018/CH401/401180022/03-WSP/CAD/62R23-RB-1/Sheets/CivilD1/62R23-sht-grading5.dgn

WSP USA Inc.
20 N. LASALLE STREET
SUITE 4200
CHICAGO, IL 60602
TEL: (312) 782-8150

USER NAME = USGP718052	DESIGNED - AD	REVISED -	
	DRAWN - AD	REVISED -	
PLOT SCALE = 40.000 ' / in.	CHECKED - KSD	REVISED -	
PLOT DATE = 11/5/2025	DATE - 11/7/2025	REVISED -	

STATE OF ILLINOIS
DEPARTMENT OF TRANSPORTATION

PROPOSED GRADING PLAN
I–80 WEST ABUTMENT

SCALE: 1"=20' | SHEET 4 OF 9 SHEETS | STA. TO STA.

F.A.I. RTE.	SECTION	COUNTY	TOTAL SHEETS	SHEET NO.
80	FAI 80 21 STRUCTURE 2	WILL	1230	135
		CONTRACT NO. 62R23		
	ILLINOIS	FED. AID PROJECT		

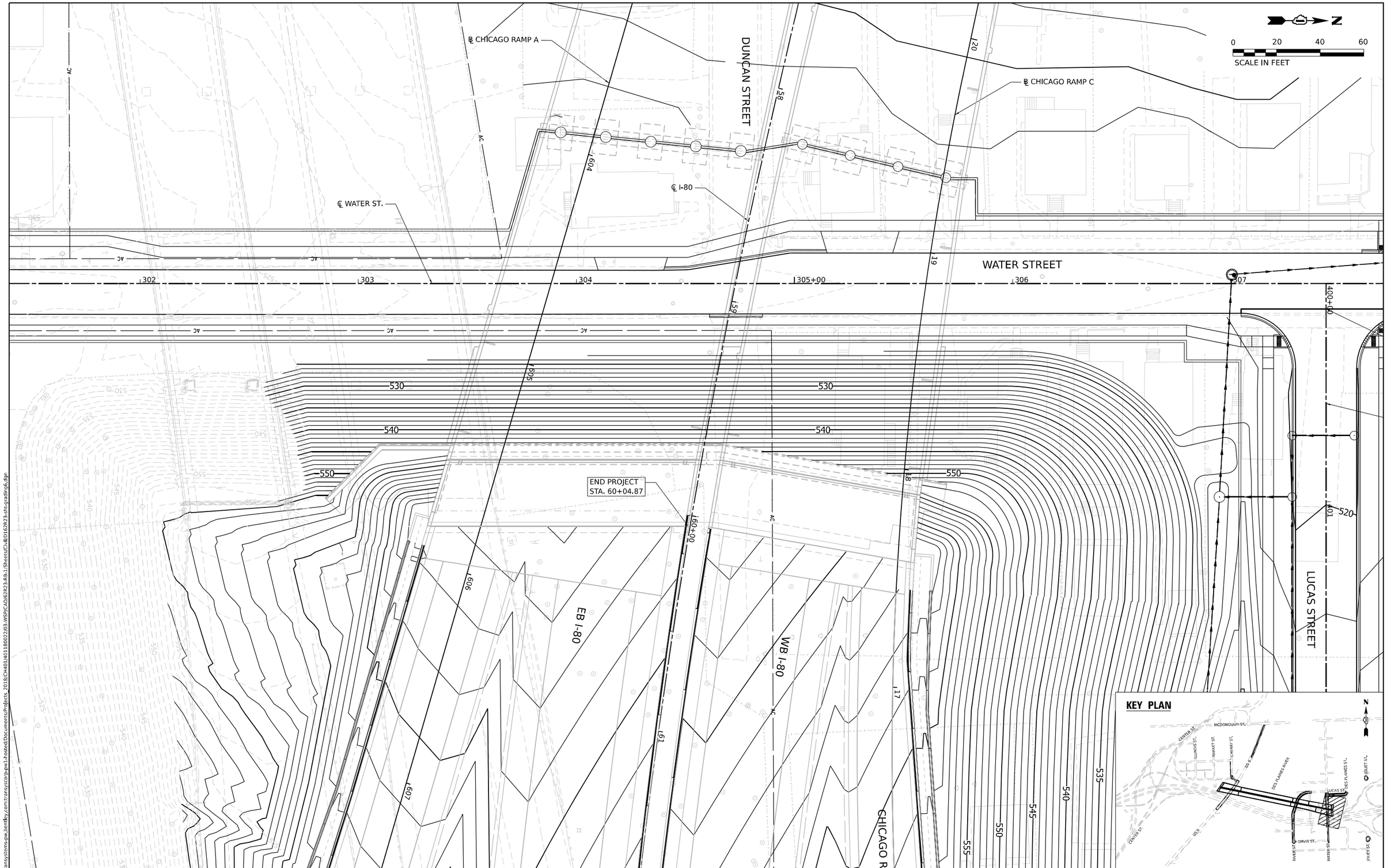

MODEL: Default
FILE NAME: pw://transystems-pw.bentley.com:transyscorp-pw1-hosted/Documents/Projects_2018/CH401/401180022/03-WSP/CAD/62R23-Rb-1/Sheets/Cl-ill/D162R23-cht-grading6.dgn

WSP USA Inc.
30 N. LASALLE STREET
SUITE 4200
CHICAGO, IL 60602
TEL: (312) 782-8150

USER NAME = USGP718052	DESIGNED - AD	REVISED -
	DRAWN - AD	REVISED -
PLOT SCALE = 40.000 ' / in.	CHECKED - KSD	REVISED -
PLOT DATE = 11/5/2025	DATE - 11/7/2025	REVISED -

STATE OF ILLINOIS
DEPARTMENT OF TRANSPORTATION

PROPOSED GRADING PLAN
I-80 EAST ABUTMENT

SCALE: 1"=20' | SHEET 5 OF 9 SHEETS | STA. | TO STA.

F.A.I. RTE.	SECTION	COUNTY	TOTAL SHEETS	SHEET NO.
80	FAI 80 21 STRUCTURE 2	WILL	1230	136
		CONTRACT NO. 62R23		
	ILLINOIS	FED. AID PROJECT		

℄ WATER ST.

PR CONSTRUCTION LIMITS

PR R.O.W.

BEGIN IMPROVEMENT
STA. 400+11.65

END IMPROVEMENT
STA. 403+96.55

DES PLAINES STREET

115+00

308

400+00

401

402

403

404

405+

℄ LUCAS \ DES PLAINES STREET

LUCAS STREET

WATER STREET

306

305+00

307

525

520

530

535

540

545

550

555

14

15

16

17

18

19

CHICAGO RAMP C

N

0 20 40 60
SCALE IN FEET

KEY PLAN

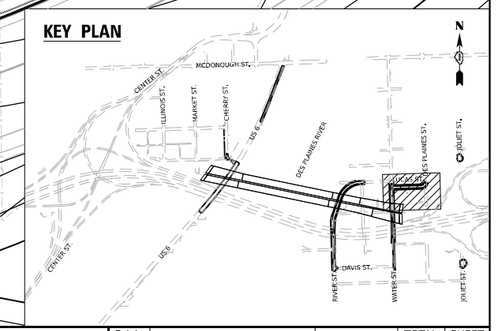

MODEL: Default
FILE NAME: pw://transystems-pw.bentley.com:transyscorp-pw1-hosted/Documents/Projects_2018/CH401/401180022/03-WSP/CAD/62R23-RB-1/Sheets/CivilD162R23-sht-grading1.dgn

WSP USA Inc.
30 N. LASALLE STREET
SUITE 4200
CHICAGO, IL 60602
TEL: (312) 782-8350

USER NAME = USGP718052	DESIGNED - AD	REVISED -	
	DRAWN - AD	REVISED -	
PLOT SCALE = 40.000 ' / in.	CHECKED - KSD	REVISED -	
PLOT DATE = 11/5/2025	DATE - 11/7/2025	REVISED -	

STATE OF ILLINOIS
DEPARTMENT OF TRANSPORTATION

PROPOSED GRADING PLAN
LUCAS STREET

SCALE: 1"=20' | SHEET 6 OF 9 SHEETS | STA. | TO STA.

F.A.I. RTE.	SECTION	COUNTY	TOTAL SHEETS	SHEET NO.
80	FAI 80 21 STRUCTURE 2	WILL	1230	137
		CONTRACT NO. 62R23		
	ILLINOIS	FED. AID PROJECT		

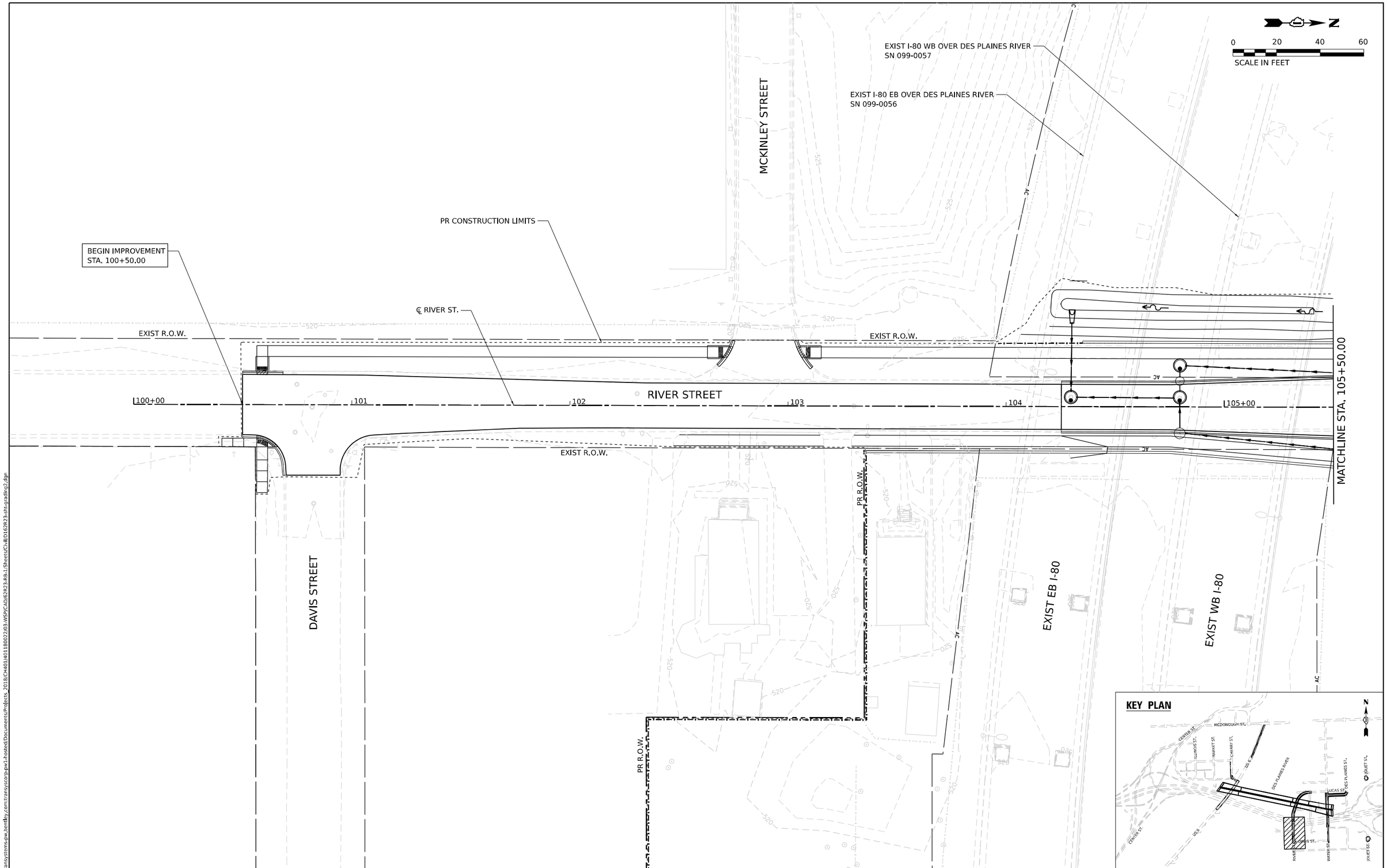

MODEL: Default
FILE NAME: pw://transystems-pw.bentley.com:transyscorp-pw1-hosted/Documents/Projects_2018/CH401/401180022/03-WSP/CAD/62R23-RB-1/Sheets/Civil/D162R23-sht-grading2.dgn

WSP USA Inc.
30 N. LASALLE STREET
SUITE 4200
CHICAGO, IL 60602
TEL: (312) 782-8150

USER NAME = USGP718052	DESIGNED - AD	REVISED -	
	DRAWN - AD	REVISED -	
PLOT SCALE = 40.000 ' / in.	CHECKED - KSD	REVISED -	
PLOT DATE = 11/5/2025	DATE - 11/7/2025	REVISED -	

STATE OF ILLINOIS
DEPARTMENT OF TRANSPORTATION

PROPOSED GRADING PLAN
RIVER STREET

SCALE: 1"=20' | SHEET 7 OF 9 SHEETS | STA. | TO STA.

F.A.I. RTE.	SECTION	COUNTY	TOTAL SHEETS	SHEET NO.
80	FAI 80 21 STRUCTURE 2	WILL	1230	138
		CONTRACT NO. 62R23		
	ILLINOIS	FED. AID PROJECT		

I-80 EB OVER DES PLAINES RIVER
SN 099-8325

℄ I-80

I-80 WB OVER DES PLAINES RIVER
SN 099-8309

PR CONSTRUCTION LIMITS

PR PERMANENT EASEMENT

PR PERMANENT EASEMENT

PR PERMANENT EASEMENT

PR R.O.W.

EXIST R.O.W.

LUCAS STREET

RIVER STREET

DUNCAN STREET

MATCHLINE STA. 105+50.00

106

107

108

109

110+00

111

112

520

525

530

535

EB I-80

WB I-80

℄ RIVER ST.

℄ CHICAGO RAMP A

MATCHLINE SEE NEXT SHEET

N

0 20 40 60

SCALE IN FEET

KEY PLAN

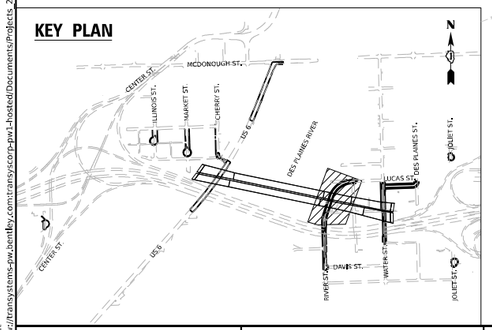

MODEL: Default
FILE NAME: pw://transystems-pw.bentley.com:transyscorp-pw1-hosted/Documents/Projects_2018/CH401/401180022/03-WSP/CAD/62R23-RB-1/Sheets/CivilD162R23-site-grading3.dgn

WSP USA Inc.
20 N. LASALLE STREET
SUITE 4200
CHICAGO, IL 60602
TEL: (312) 782-8150

USER NAME = USGP718052	DESIGNED - AD	REVISED -	
	DRAWN - AD	REVISED -	
PLOT SCALE = 40.000 ' / in.	CHECKED - KSD	REVISED -	
PLOT DATE = 11/5/2025	DATE - 11/7/2025	REVISED -	

STATE OF ILLINOIS
DEPARTMENT OF TRANSPORTATION

PROPOSED GRADING PLAN
RIVER STREET

SCALE: 1"=20' | SHEET 8 OF 9 SHEETS | STA. TO STA.

F.A.I. RTE.	SECTION	COUNTY	TOTAL SHEETS	SHEET NO.
80	FAI 80 21 STRUCTURE 2	WILL	1230	139
		CONTRACT NO. 62R23		
		ILLINOIS	FED. AID PROJECT	

MATCHLINE SEE PREVIOUS SHEET

0 20 40 60
SCALE IN FEET

I-80 EB OVER DES PLAINES RIVER
SN 099-8325

I-80 WB OVER DES PLAINES RIVER
SN 099-8309

PR CONSTRUCTION LIMITS

KIEP AVENUE

LUCAS STREET

DUNCAN STREET

WATER STREET

EB I-80

WB I-80

EXIST WB I-80

EXIST R.O.W.

PR R.O.W.

℄ I-80

520

1305+00

1306

1400+00

601 602 603 604

155+00 156 157 158

19 20 21 22

113 114

KEY PLAN

MCDONOUGH ST.
CENTER ST.
ILLINOIS ST.
MARKET ST.
CHERRY ST.
US 6
DES PLAINES RIVER
LUCAS ST.
DES PLAINES ST.
JOLIET ST.
DAVIS ST.
RIVER ST.
WATER ST.

MODEL: Default
FILE NAME: pw://transystems-pw.bentley.com:transyscorp-pw1-hosted/Documents/Projects_2018/CH401/401180022/03-WSP/CAD/62R23-RB-1/Sheets/CivilD162R23-sht-grading4.dgn

WSP USA Inc.
30 N. LASALLE STREET
SUITE 4200
CHICAGO, IL 60602
TEL: (312) 782-8150

USER NAME = USGP718052	DESIGNED - AD	REVISED -
	DRAWN - AD	REVISED -
PLOT SCALE = 40,000 ' / in.	CHECKED - KSD	REVISED -
PLOT DATE = 11/5/2025	DATE - 11/7/2025	REVISED -

STATE OF ILLINOIS
DEPARTMENT OF TRANSPORTATION

PROPOSED GRADING PLAN
RIVER STREET, LUCAS STREET & WATER STREET

SCALE: 1"=20' | SHEET 9 OF 9 SHEETS | STA. TO STA.

F.A.I. RTE.	SECTION	COUNTY	TOTAL SHEETS	SHEET NO.
80	FAI 80 21 STRUCTURE 2	WILL	1230	140
		CONTRACT NO. 62R23		
	ILLINOIS	FED. AID PROJECT		

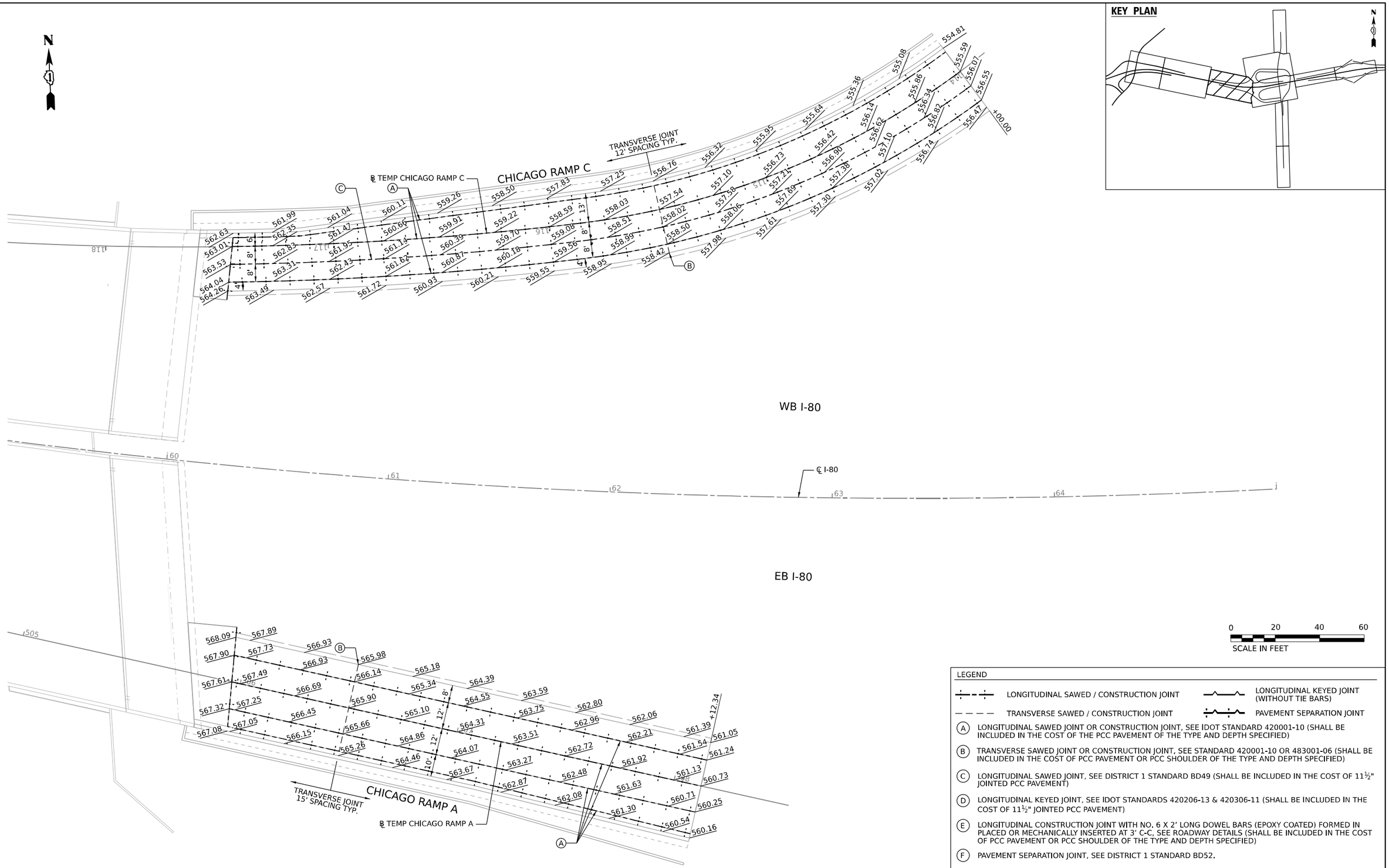

LEGEND

- LONGITUDINAL SAWED / CONSTRUCTION JOINT
- TRANSVERSE SAWED / CONSTRUCTION JOINT
- LONGITUDINAL KEYED JOINT (WITHOUT TIE BARS)
- PAVEMENT SEPARATION JOINT

(A) LONGITUDINAL SAWED JOINT OR CONSTRUCTION JOINT, SEE IDOT STANDARD 420001-10 (SHALL BE INCLUDED IN THE COST OF THE PCC PAVEMENT OF THE TYPE AND DEPTH SPECIFIED)

(B) TRANSVERSE SAWED JOINT OR CONSTRUCTION JOINT, SEE STANDARD 420001-10 OR 483001-06 (SHALL BE INCLUDED IN THE COST OF PCC PAVEMENT OR PCC SHOULDER OF THE TYPE AND DEPTH SPECIFIED)

(C) LONGITUDINAL SAWED JOINT, SEE DISTRICT 1 STANDARD BD49 (SHALL BE INCLUDED IN THE COST OF 11½" JOINTED PCC PAVEMENT)

(D) LONGITUDINAL KEYED JOINT, SEE IDOT STANDARDS 420206-13 & 420306-11 (SHALL BE INCLUDED IN THE COST OF 11½" JOINTED PCC PAVEMENT)

(E) LONGITUDINAL CONSTRUCTION JOINT WITH NO. 6 X 2' LONG DOWEL BARS (EPOXY COATED) FORMED IN PLACED OR MECHANICALLY INSERTED AT 3' C-C, SEE ROADWAY DETAILS (SHALL BE INCLUDED IN THE COST OF PCC PAVEMENT OR PCC SHOULDER OF THE TYPE AND DEPTH SPECIFIED)

(F) PAVEMENT SEPARATION JOINT, SEE DISTRICT 1 STANDARD BD52.

(G) LONGITUDINAL CONSTRUCTION JOINT, SEE IDOT STANDARD 606001-08 (SHALL BE INCLUDED IN THE COST OF COMBINATION CURB AND GUTTER)

MODEL: Default
FILE NAME: pw://transystems-pw.bentley.com:transyscorp-pw1-hosted/Documents/Projects_2018/CH401/401180022/03-WSP/CAD/62R23-Rb-1/Sheets/Civil/D162R23-cht-EAST-Joint-01.dgn

BURNS McDONNELL

USER NAME = USGP718052	DESIGNED - JAP	REVISED -	
	DRAWN - TMM	REVISED -	
PLOT SCALE = 40.000 ' / in.	CHECKED - JIR	REVISED -	
PLOT DATE = 11/5/2025	DATE - 11/7/2025	REVISED -	

STATE OF ILLINOIS
DEPARTMENT OF TRANSPORTATION

PAVEMENT JOINTING AND ELEVATION PLANS

SCALE: 1" = 20' | SHEET 1 OF 1 SHEETS | STA. TO STA.

F.A.I. RTE.	SECTION	COUNTY	TOTAL SHEETS	SHEET NO.
80	FAI 80 21 STRUCTURE 2	WILL	1230	141

CONTRACT NO. 62R23

ILLINOIS | FED. AID PROJECT

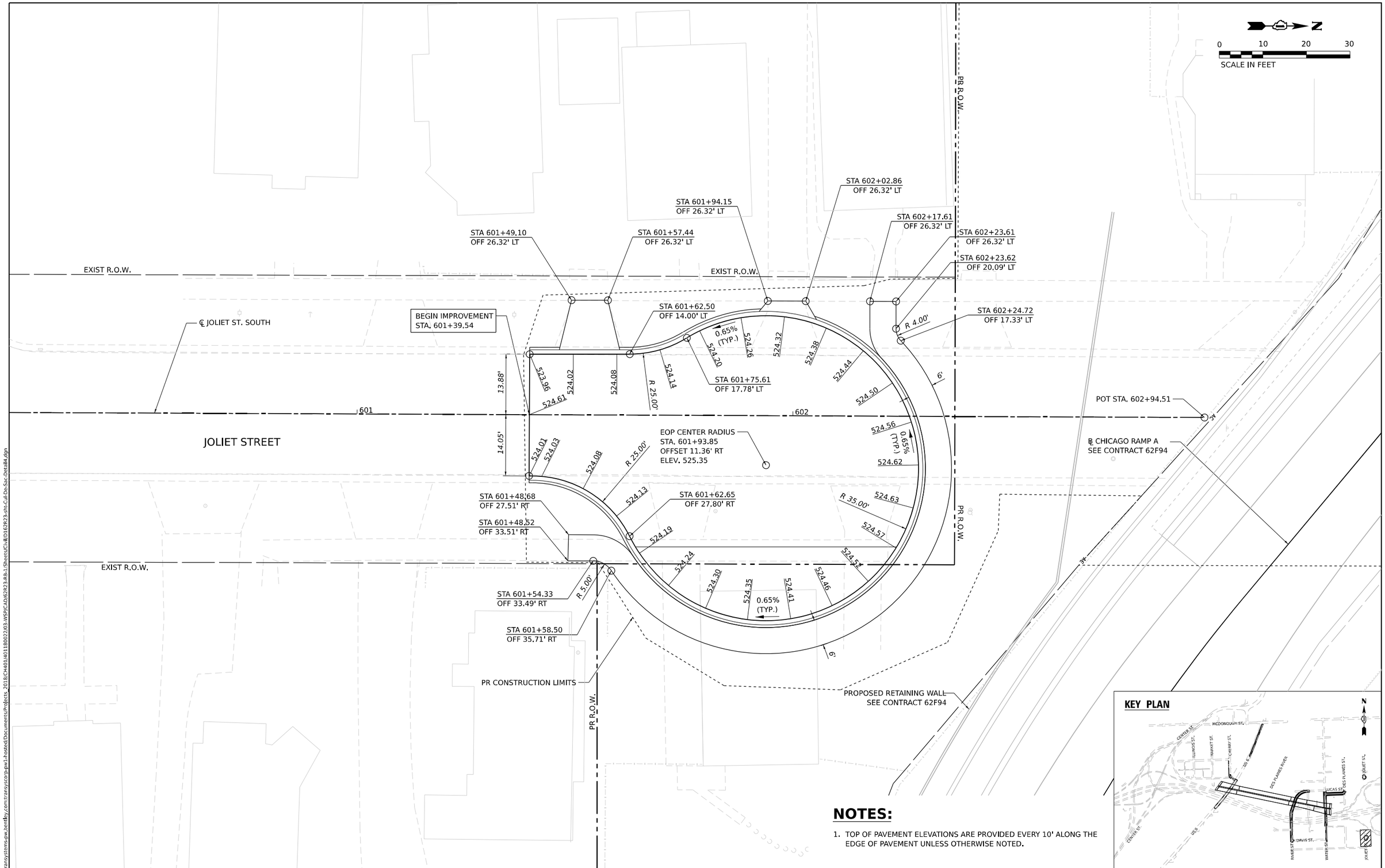

NOTES:

1. TOP OF PAVEMENT ELEVATIONS ARE PROVIDED EVERY 10' ALONG THE EDGE OF PAVEMENT UNLESS OTHERWISE NOTED.

MODEL: Default
FILE NAME: pw://transystems-pw.bentley.com:transyscorp-pw1-hosted/Documents/Projects_2018/CH401/401180022/03-WSP/CAD/62R23-RB-1/Sheets/CivIII/D162R23-rh-Cul-De-Sac-Details.dgn

WSP USA Inc.
30 N. LASALLE STREET
SUITE 4200
CHICAGO, IL 60602
TEL: (312) 782-8150

USER NAME = USGP718052	DESIGNED - AJG	REVISED -	
	DRAWN - AJG	REVISED -	
PLOT SCALE = 20.000 ' / in.	CHECKED - KSD	REVISED -	
PLOT DATE = 11/5/2025	DATE - 11/7/2025	REVISED -	

STATE OF ILLINOIS
DEPARTMENT OF TRANSPORTATION

CUL-DE-SAC DETAILS
JOLIET STREET SOUTH

SCALE: 1"=10' | SHEET 1 OF 2 SHEETS | STA. TO STA.

F.A.I. RTE.	SECTION	COUNTY	TOTAL SHEETS	SHEET NO.
80	FAI 80 21 STRUCTURE 2	WILL	1230	142
		CONTRACT NO. 62R23		
		ILLINOIS	FED. AID PROJECT	

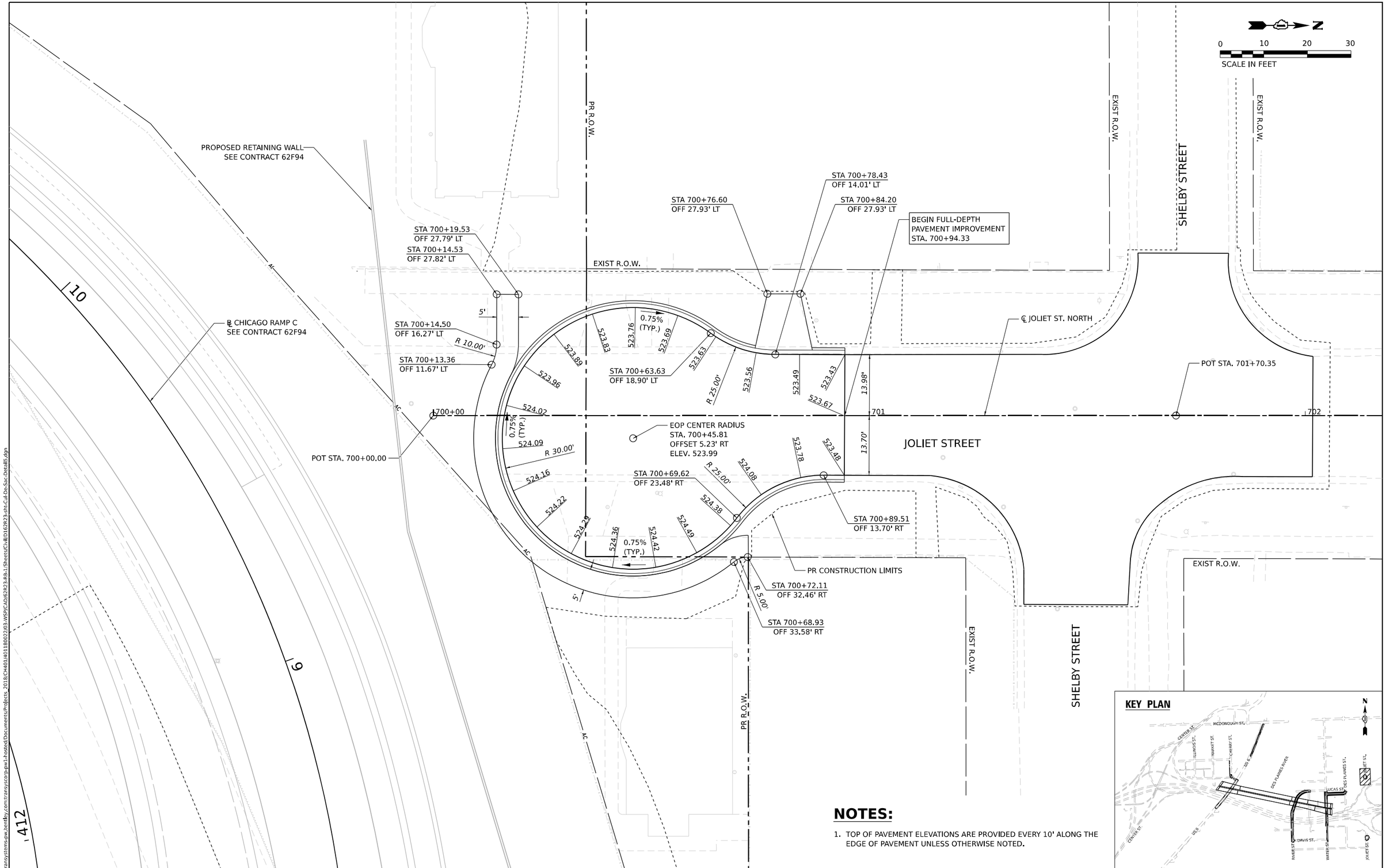

KEY PLAN

NOTES:

1. TOP OF PAVEMENT ELEVATIONS ARE PROVIDED EVERY 10' ALONG THE EDGE OF PAVEMENT UNLESS OTHERWISE NOTED.

MODEL: Default
FILE NAME: pw://transystems-pw.bentley.com:transyscorp-pw1-hosted/Documents/Projects_2018/CH401/401180022/03-WSP/CAD/62R23-RB-1/Sheets/Civil/0162R23-sht-Cul-De-Sac-Details.dgn

WSP USA Inc.
30 N. LASALLE STREET
SUITE 4200
CHICAGO, IL 60602
TEL: (312) 782-8150

USER NAME = USGP718052	DESIGNED - AJG	REVISED -	
	DRAWN - AJG	REVISED -	
PLOT SCALE = 20.000 ' / in.	CHECKED - KSD	REVISED -	
PLOT DATE = 11/5/2025	DATE - 11/7/2025	REVISED -	

STATE OF ILLINOIS
DEPARTMENT OF TRANSPORTATION

CUL-DE-SAC DETAILS
JOLIET STREET NORTH

SCALE: 1"=10' | SHEET 2 OF 2 SHEETS | STA. TO STA.

F.A.I. RTE.	SECTION	COUNTY	TOTAL SHEETS	SHEET NO.
80	FAI 80 21 STRUCTURE 2	WILL	1230	143
		CONTRACT NO. 62R23		
		ILLINOIS	FED. AID PROJECT	

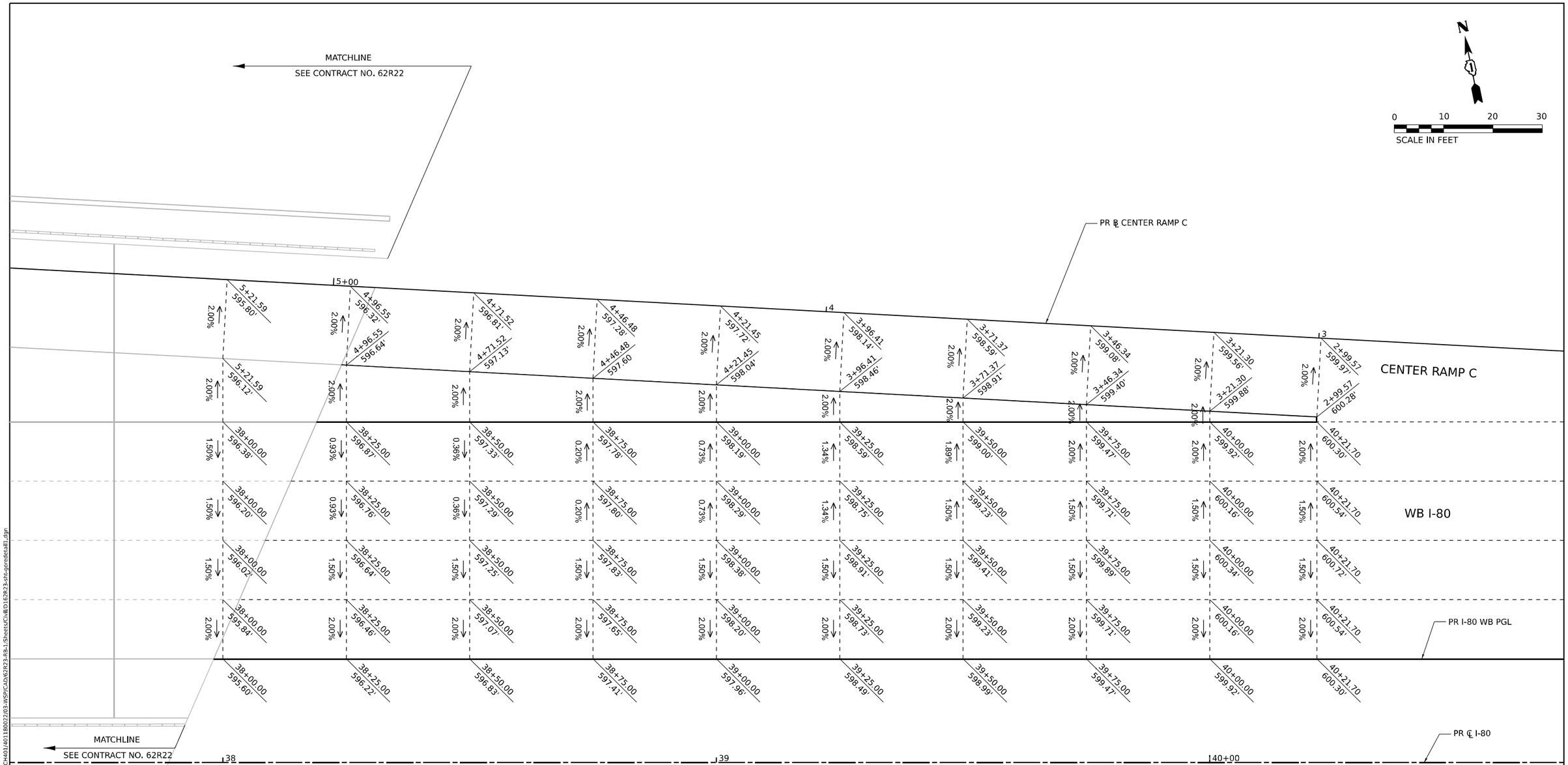

MODEL: Default
FILE NAME: pw://transystems-pw.bentley.com:transyscorp-pw1-hosted/Documents/Projects_2018/CH401/401180022/03-WSP/CAD/62R23-RB-1/Sheets/Civil/0162R23-sht-geredetail1.dgn

WSP USA Inc. 30 N. LASALLE STREET SUITE 4200 CHICAGO, IL 60602 TEL: (312) 782-8150	USER NAME = USGP718052	DESIGNED - KW	REVISED -	STATE OF ILLINOIS DEPARTMENT OF TRANSPORTATION	GORE DETAILS CENTER RAMP C	F.A.I. RTE.	SECTION	COUNTY	TOTAL SHEETS	SHEET NO.
		DRAWN - KW	REVISED -			80	FAI 80 21 STRUCTURE 2	WILL	1230	144
	PLOT SCALE = 20.000 ' / in.	CHECKED - KSD	REVISED -					CONTRACT NO. 62R23		
	PLOT DATE = 11/5/2025	DATE - 11/7/2025	REVISED -		SCALE: 1"=10' SHEET 1 OF 4 SHEETS STA. TO STA.		ILLINOIS	FED. AID PROJECT		

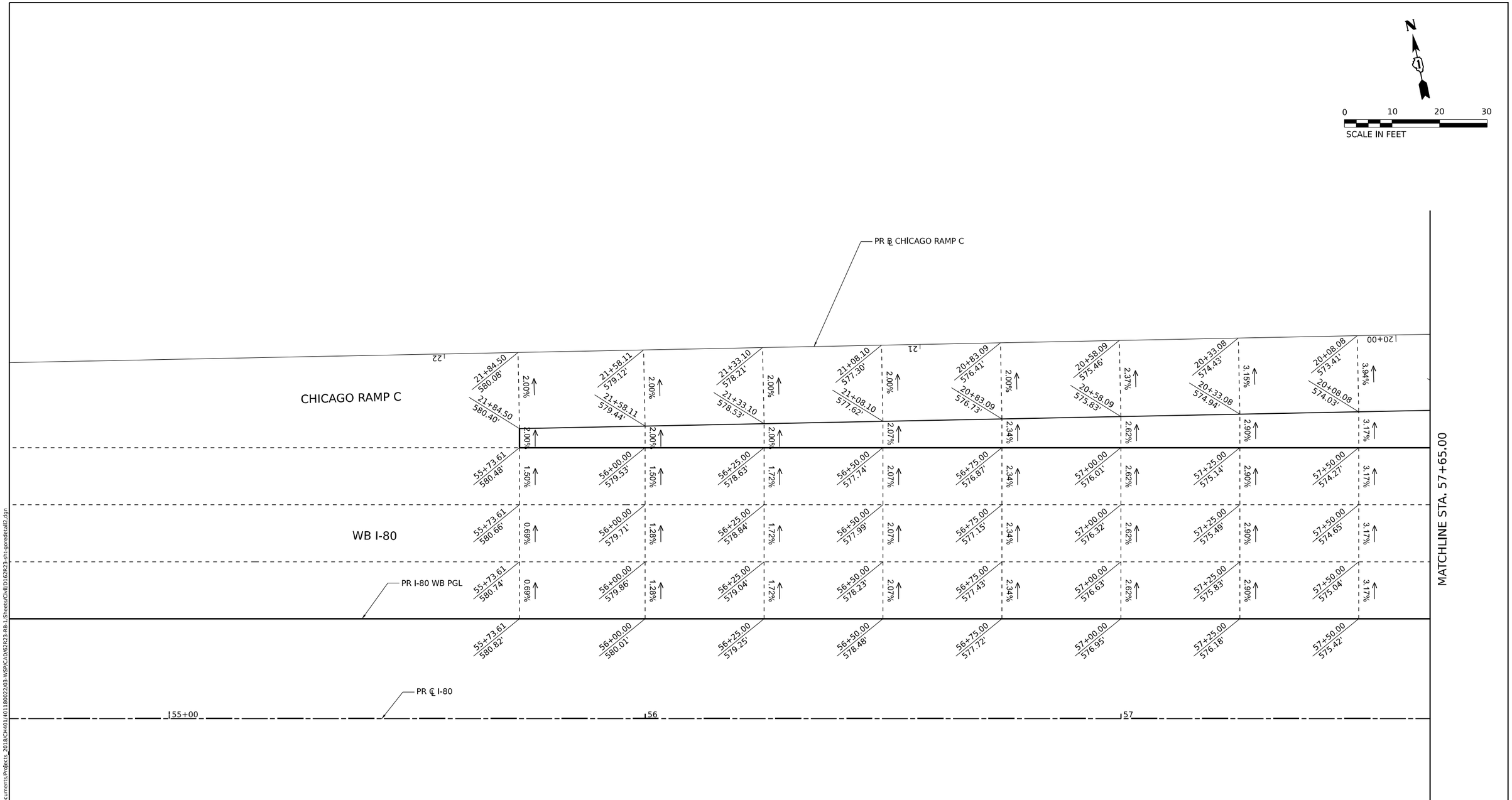

MODEL: Default
FILE NAME: pw://transystems-pw.bentley.com:transyscorp-pw1-hosted/Documents/Projects_2018/CH401/401180022/03-WSP/CAD/62R23-rlb-1\Sheets/CivilD162R23-ctlr-goredetail2.dgn

WSP USA Inc.
30 N. LASALLE STREET
SUITE 4200
CHICAGO, IL 60602
TEL: (312) 782-8150

USER NAME = USGP718052	DESIGNED - KW	REVISED -	STATE OF ILLINOIS DEPARTMENT OF TRANSPORTATION
	DRAWN - KW	REVISED -	
PLOT SCALE = 20.000 ' / in.	CHECKED - KSD	REVISED -	
PLOT DATE = 11/5/2025	DATE - 11/7/2025	REVISED -	

GORE DETAILS
CHICAGO RAMP C

SCALE: 1"=10' | SHEET 2 OF 4 SHEETS | STA. | TO STA.

F.A.I. RTE.	SECTION	COUNTY	TOTAL SHEETS	SHEET NO.
80	FAI 80 21 STRUCTURE 2	WILL	1230	145
		CONTRACT NO. 62R23		
	ILLINOIS	FED. AID PROJECT		

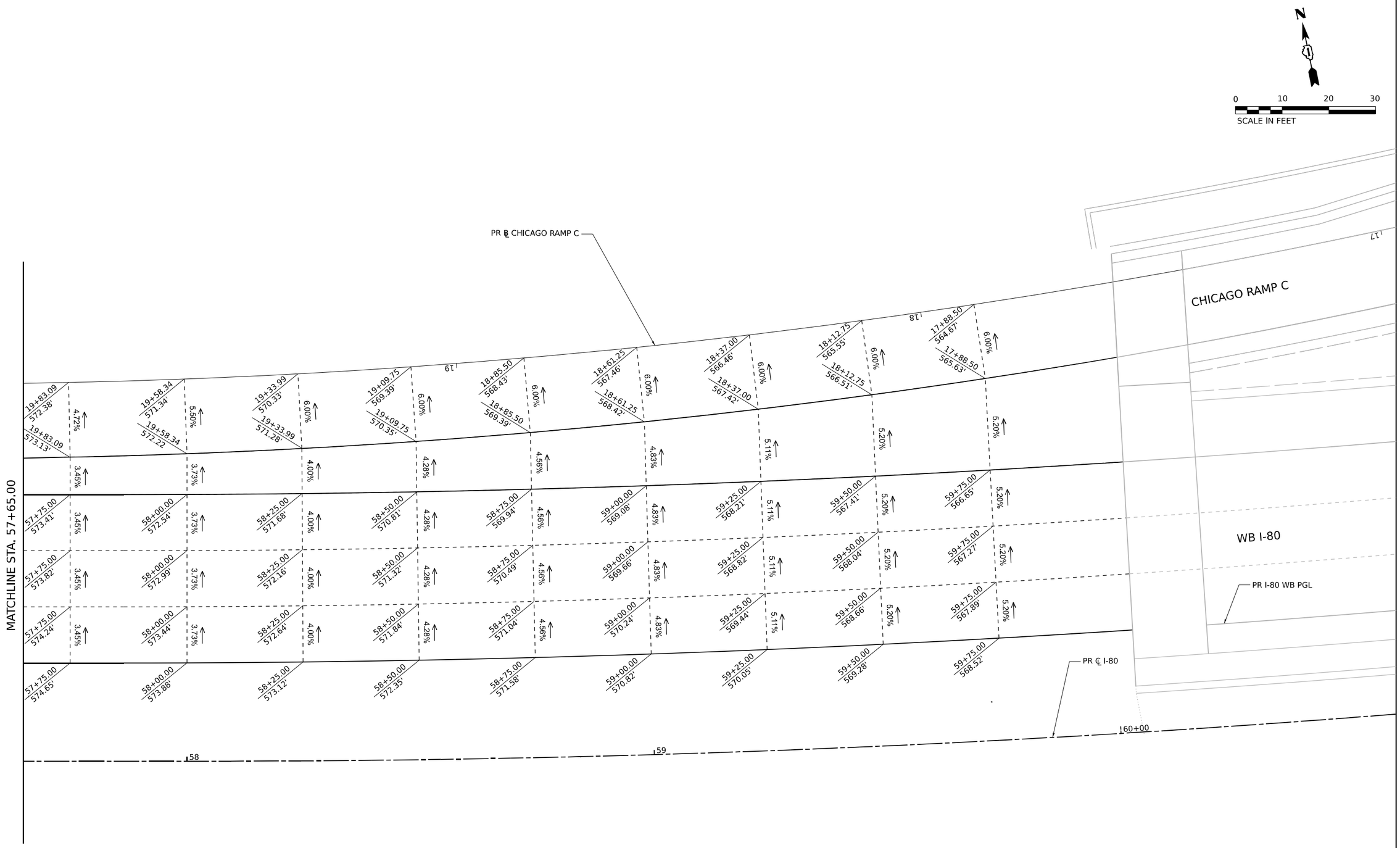

MODEL: Default
FILE NAME: pw://transystems-pw.bentley.com:transystcorp-pw1-hosted/Documents/Projects_2018/CH401/401180022/03-WSP/CAD/62R23-R8-1/Sheets/CH401D162R23-sht-geodetail3.dgn

WSP USA Inc.
30 N. LASALLE STREET
SUITE 4200
CHICAGO, IL 60602
TEL: (312) 782-8150

USER NAME = USGP718052	DESIGNED - KW	REVISED -	
	DRAWN - KW	REVISED -	
PLOT SCALE = 20.000 ' / in.	CHECKED - KSD	REVISED -	
PLOT DATE = 11/5/2025	DATE - 11/7/2025	REVISED -	

STATE OF ILLINOIS
DEPARTMENT OF TRANSPORTATION

GORE DETAILS
CHICAGO RAMP C

SCALE: 1"=10' | SHEET 3 OF 4 SHEETS | STA. | TO STA.

F.A.I. RTE.	SECTION	COUNTY	TOTAL SHEETS	SHEET NO.
80	FAI 80 21 STRUCTURE 2	WILL	1230	146
		CONTRACT NO. 62R23		
	ILLINOIS	FED. AID PROJECT		

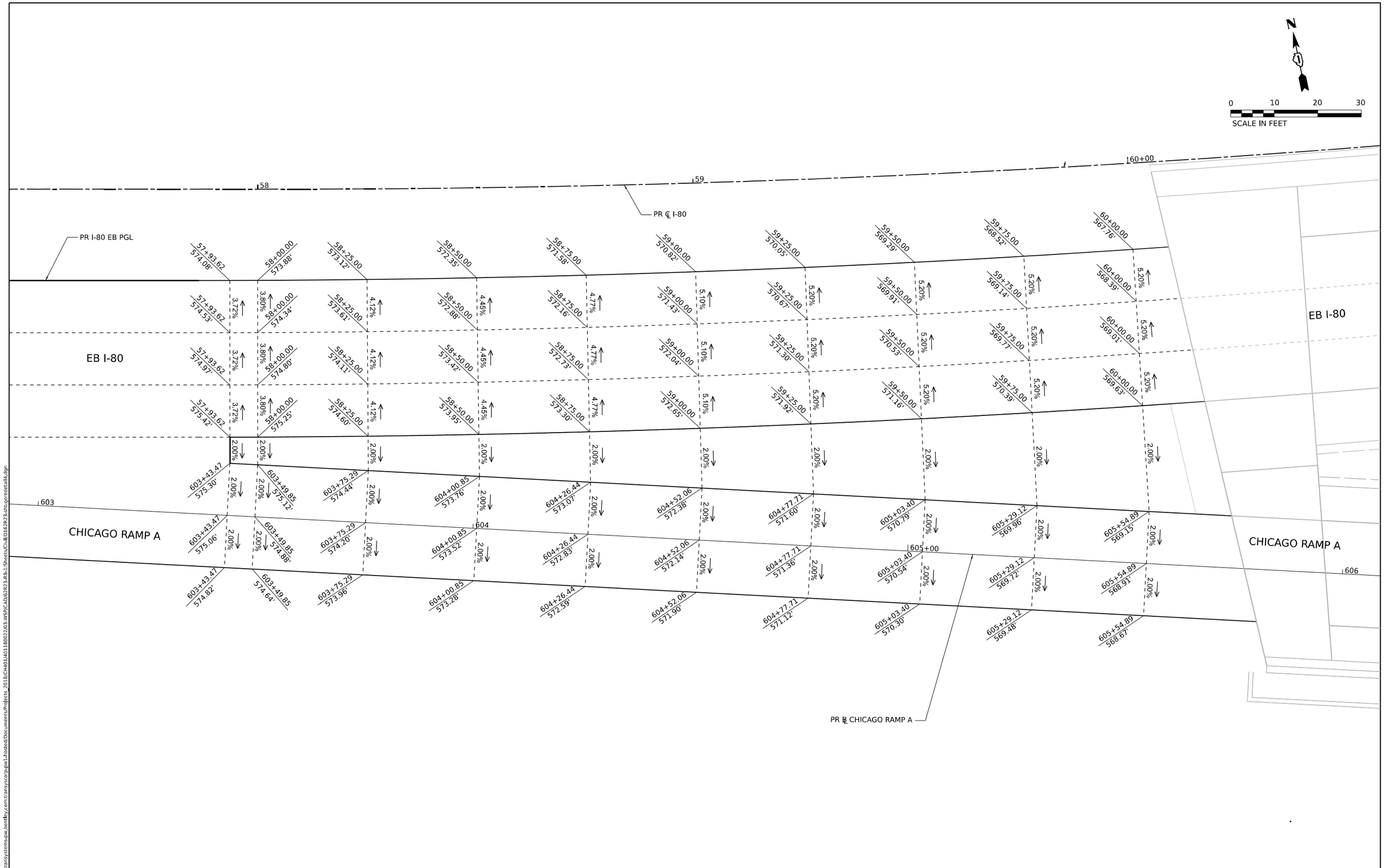

MODEL: Default
FILE NAME: pw://transystems-pw.bentley.com:transyscorp-pw1-hosted/Documents/Projects_2018/CH401/401180022/03-WSP/CAD/62R23-RB-1/Sheets/Civil/0162R23-sht-geometrisl4.dgn

WSP USA Inc. 30 N. LASALLE STREET SUITE 4200 CHICAGO, IL 60602 TEL: (312) 782-8150	USER NAME = USGP718052	DESIGNED - KW	REVISED -	STATE OF ILLINOIS DEPARTMENT OF TRANSPORTATION	GORE DETAILS CHICAGO RAMP A	F.A.I. RTE.	SECTION	COUNTY	TOTAL SHEETS	SHEET NO.
		DRAWN - KW	REVISED -			80	FAI 80 21 STRUCTURE 2	WILL	1230	147
	PLOT SCALE = 20.000 ' / in.	CHECKED - KSD	REVISED -					CONTRACT NO. 62R23		
	PLOT DATE = 11/5/2025	DATE - 11/7/2025	REVISED -		SCALE: 1"=10' SHEET 4 OF 4 SHEETS STA. TO STA.		ILLINOIS	FED. AID PROJECT		

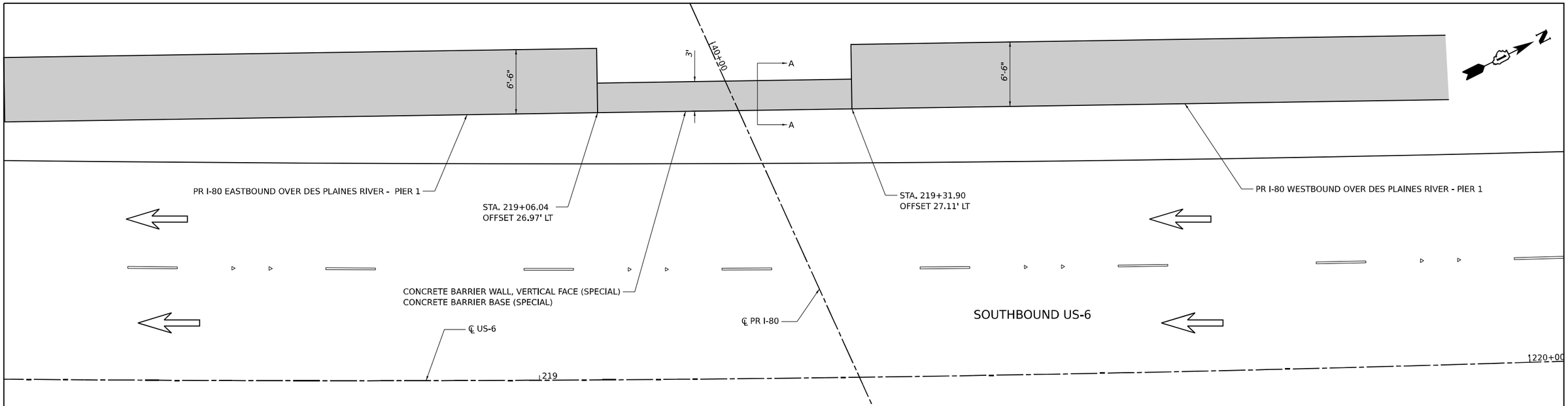

PLAN

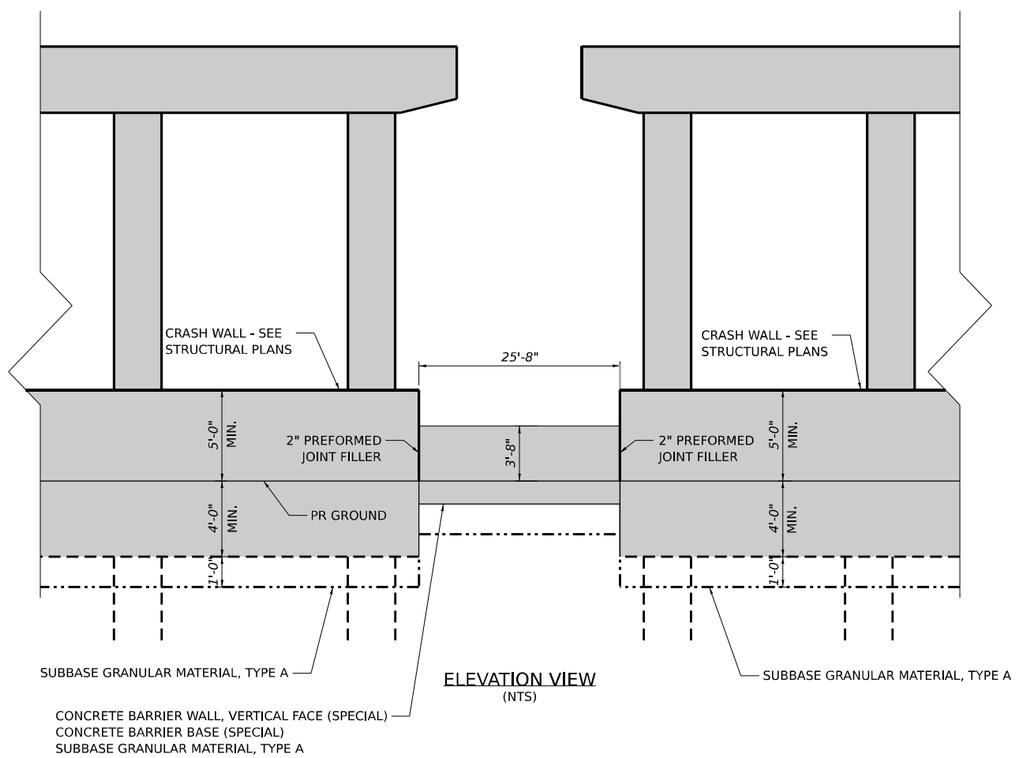

ELEVATION VIEW
(NTS)

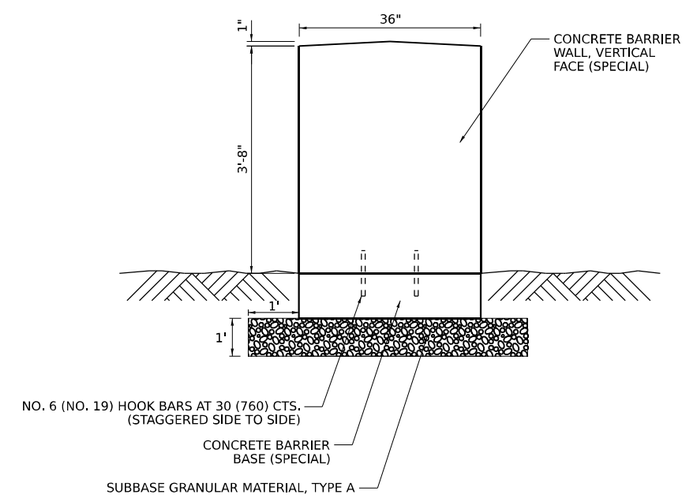

SECTION A-A
(NTS)

MODEL: Default
FILE NAME: pw://transystems-pw.bentley.com:transyscorp-pw1-hosted/Documents/Projects_2018/CH401/401180022/03-WSP/CAD/62R23-RB-1/Sheets/CivilD162R23-Sht-BarrierDetail.dgn

WSP USA Inc.
30 N. LASALLE STREET
SUITE 4200
CHICAGO, IL 60602
TEL: (312) 782-8150

USER NAME = USGP718052	DESIGNED - KW	REVISED -	
	DRAWN - KW	REVISED -	
PLOT SCALE = 10,000 ' / in.	CHECKED - KSD	REVISED -	
PLOT DATE = 11/5/2025	DATE - 11/7/2025	REVISED -	

STATE OF ILLINOIS
DEPARTMENT OF TRANSPORTATION

ROADWAY DETAILS
CONCRETE BARRIER WALL

SCALE: NTS | SHEET 1 OF 9 SHEETS | STA. TO STA.

F.A.I. RTE.	SECTION	COUNTY	TOTAL SHEETS	SHEET NO.
80	FAI 80 21 STRUCTURE 2	WILL	1230	148
		CONTRACT NO. 62R23		
	ILLINOIS	FED. AID PROJECT		

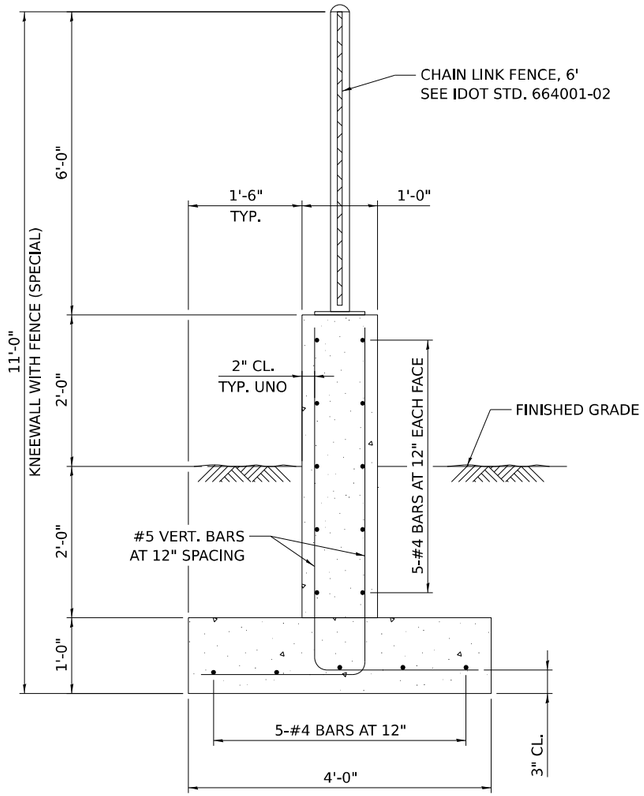

TYPICAL SECTION
KNEEWALL WITH FENCE (SPECIAL)

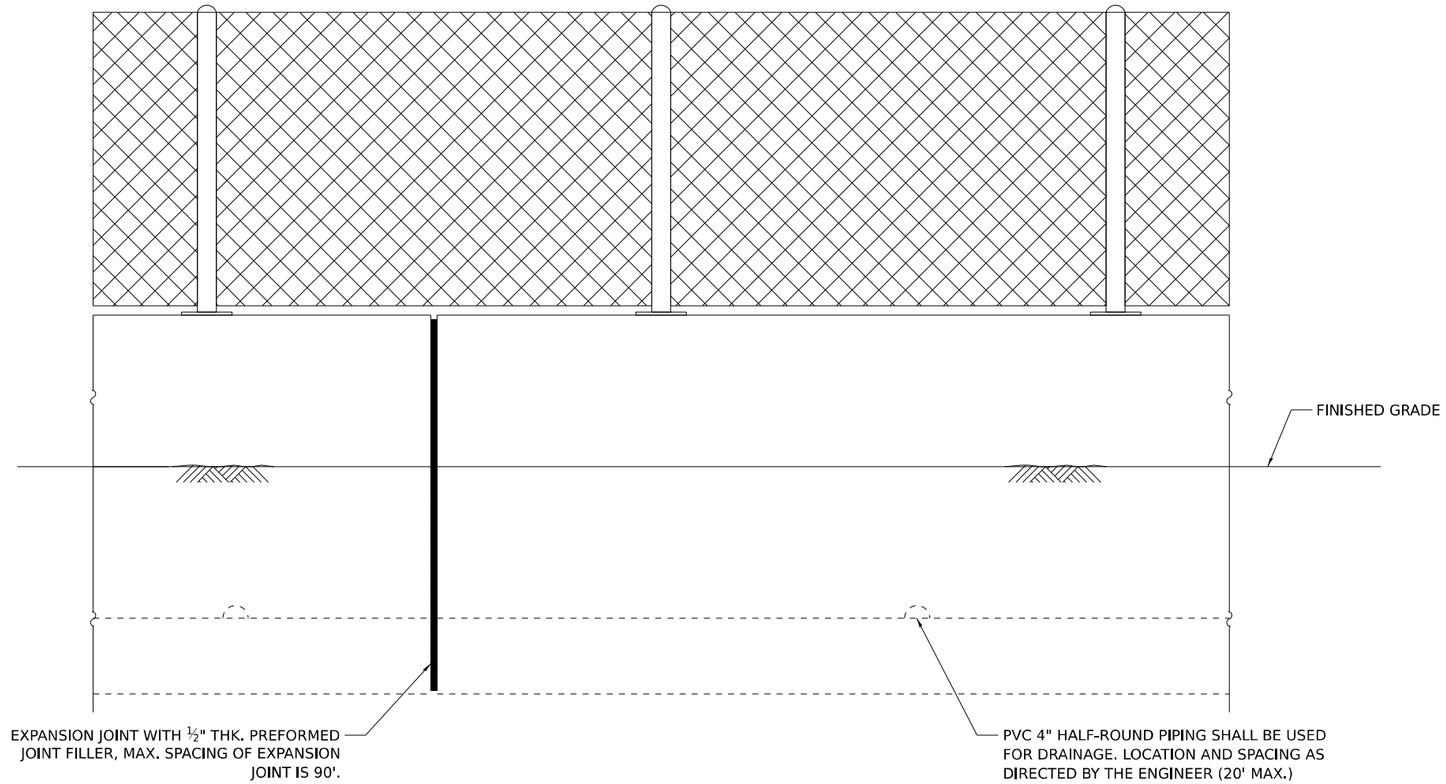

ELEVATION
KNEEWALL WITH FENCE (SPECIAL)

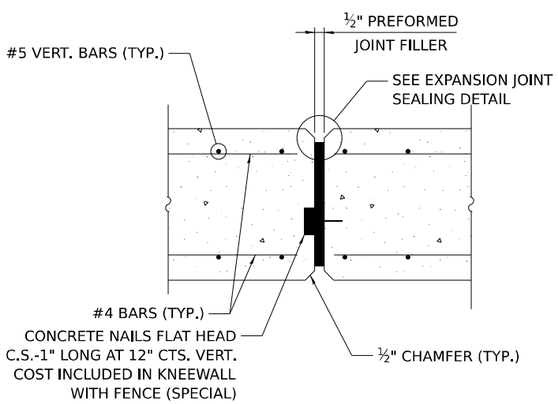

EXPANSION JOINT DETAIL

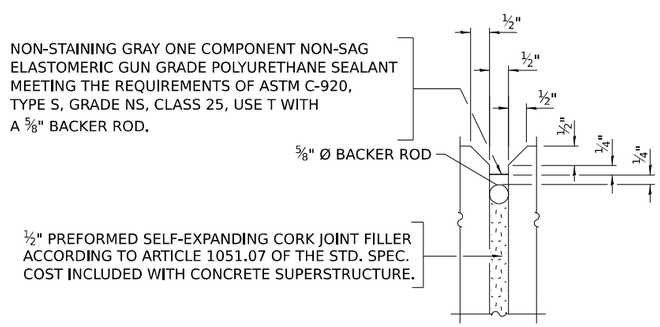

EXPANSION JOINT
SEALING DETAIL

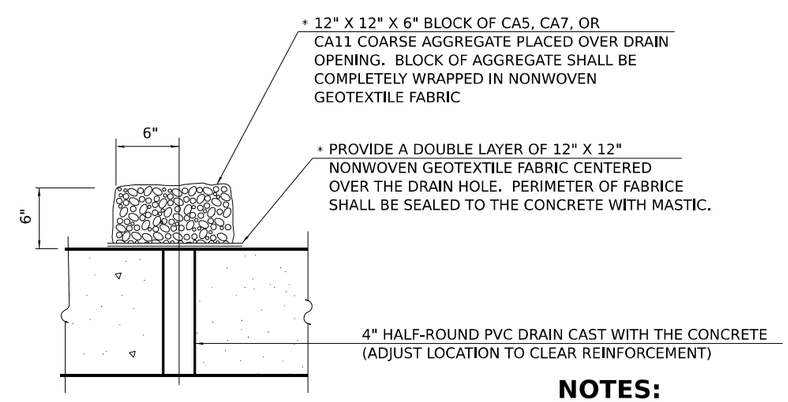

DRAIN DETAIL

*NONWOVEN GEOTEXTILE FABRIC SHALL CONFORM TO THE REQUIREMENTS OF ARTICLE 1080.01 OF THE STANDARD SPECIFICATIONS. THE MINIMUM WEIGHT OF THE FABRIC SHALL BE 6 OUNCES PER SQUARE YARD.

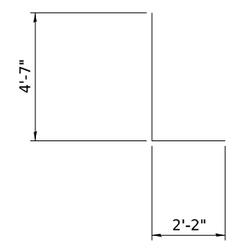

VERTICAL BARS

NOTES:

1. SEE ROADWAY PLANS FOR LIMITS OF KNEEWALL WITH FENCE (SPECIAL).
2. KNEEWALL WITH FENCE (SPECIAL) SHALL INCLUDE CONCRETE STRUCTURES, REINFORCEMENT BARS, EPOXY COATED, DRAINAGE ITEMS, PROTECTIVE COAT, AND CHAIN LINK FENCE.
3. CONCRETE: f'c = 3500 PSI (CLASS SI).
4. APPLY PROTECTIVE COAT TO TOP AND VERTICAL FACES OF STEM.

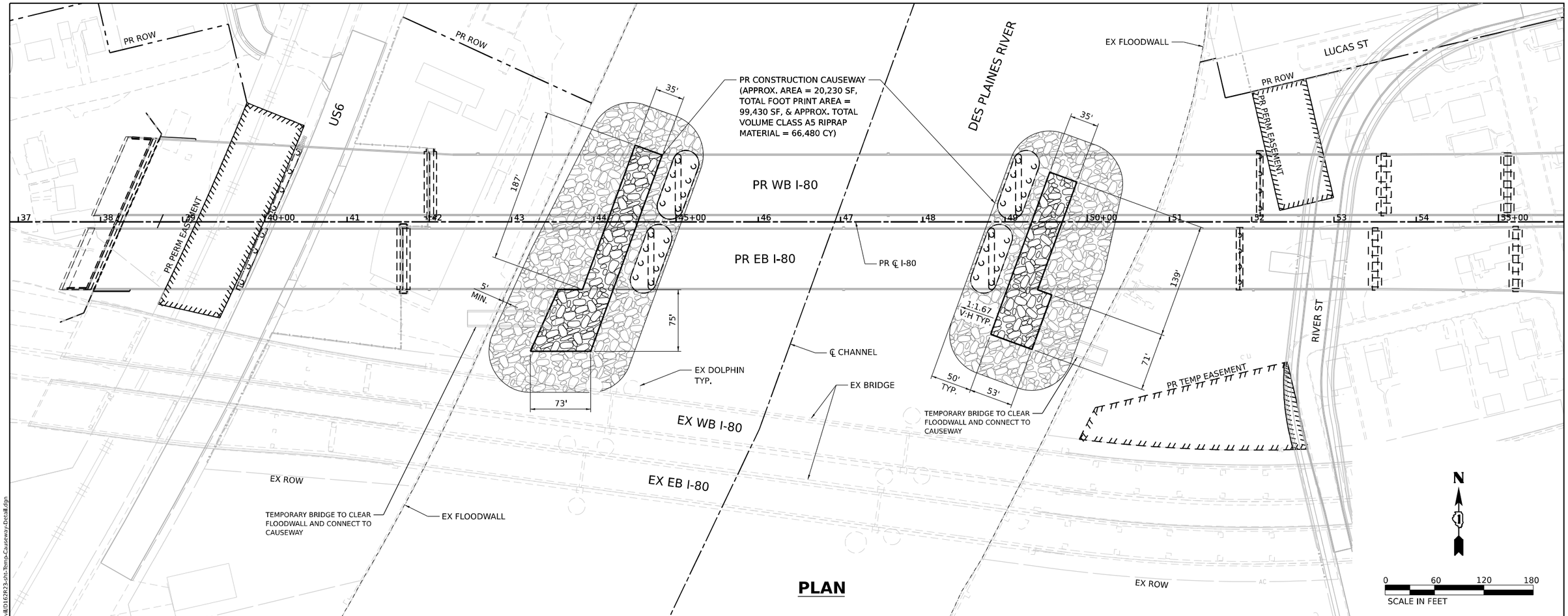

PLAN

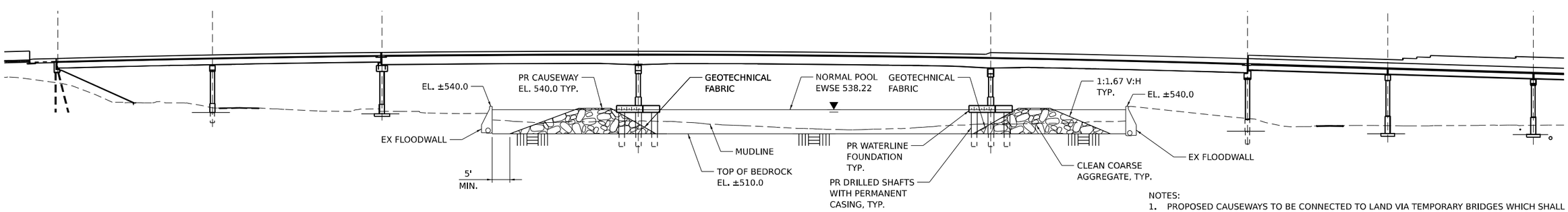

ELEVATION

NOTES:

1. PROPOSED CAUSEWAYS TO BE CONNECTED TO LAND VIA TEMPORARY BRIDGES WHICH SHALL CLEAR OVER THE EXISTING FLOODWALLS.
2. SHOULD THE CONTRACTOR DESIRE TO SIGNIFICANTLY DEVIATE FROM THE CAUSEWAY PLANS, FULL DESIGN DETAILS INCLUDING LOCATION, MATERIAL SPECIFICATIONS, AND HYDRAULIC ANALYSIS SHOULD BE INCLUDED IN A REQUEST TO THE ARMY CORPS OF ENGINEERS. REQUESTS SHALL BE MADE TO THE UNITED STATE ARMY CORPS OF ENGINEERS, ROCK ISLAND DISTRICT, CLOCK TOWER BUILDING, ROCK ISLAND, IL 61204.
3. SEE SPECIAL PROVISION "TEMPORARY FACILITIES INSTALLED BY CONTRACTOR" FOR ADDITIONAL INFORMATION.

MODEL: Default
FILE NAME: pw://transystems-pw.bentley.com:transyscorp-pw1-hosted/Documents/Projects_2018/CH401/401180022/03-WSP/CAD/62R23-RB-1/Sheets/CH401D162R23-sht-Temp-Causeway-Detail.dgn

WSP USA Inc.
30 N. LASALLE STREET
SUITE 4200
CHICAGO, IL 60602
TEL: (312) 782-8150

USER NAME = USGP718052	DESIGNED - KD	REVISED -	
	DRAWN - KD	REVISED -	
PLOT SCALE = 120.000 ' / in.	CHECKED - PJL	REVISED -	
PLOT DATE = 11/5/2025	DATE - 11/7/2025	REVISED -	

STATE OF ILLINOIS
DEPARTMENT OF TRANSPORTATION

ROADWAY DETAIL
TEMPORARY CAUSEWAY DETAIL

SCALE: 1"=60' | SHEET 3 OF 9 SHEETS | STA. TO STA.

F.A.I. RTE.	SECTION	COUNTY	TOTAL SHEETS	SHEET NO.
80	FAI 80 21 STRUCTURE 2	WILL	1230	150
		CONTRACT NO. 62R23		
	ILLINOIS	FED. AID PROJECT		

LEGEND

MOWING CYCLE LIMITS

N

CENTER STREET

ILLINOIS ST

MARKET ST

CHERRY ST

JASPER ST

US-6

I-80 WB

I-80 EB

DES PLAINES RIVER

MOWING CYCLE LIMITS

PR ROW

EX ROW

PR TEMP EASEMENT

PR PERM EASEMENT

KIEP AVE

CHICAGO RAMP C

CHICAGO RAMP BB

CHICAGO RAMP A

CHICAGO RAMP AA

RIVER ST

WATER ST

DES PLAINES ST

S JOILET ST

0 150 300 450

SCALE IN FEET

MODEL: Default

FILE NAME: pw://transystems-pw.bentley.com:transyscorp-pw1-hosted/Documents/Projects_2018/CH401/401180022/03-WSP/CAD/62R23-RB-1/Sheets/Cl&ID/162R23-sht-mowing cycle limit.dgn

WSP USA Inc.
30 N. LASALLE STREET
SUITE 4200
CHICAGO, IL 60602
TEL: (312) 782-8150

USER NAME = USGP718052	DESIGNED - DJ	REVISED -	
	DRAWN - DJ	REVISED -	
PLOT SCALE = 300.000 ' / in.	CHECKED - KSD	REVISED -	
PLOT DATE = 11/5/2025	DATE - 11/7/2025	REVISED -	

STATE OF ILLINOIS
DEPARTMENT OF TRANSPORTATION

ROADWAY DETAIL
MOWING CYCLE LIMITS

SCALE: 1"=150' | SHEET 4 OF 9 SHEETS | STA. TO STA.

F.A.I. RTE.	SECTION	COUNTY	TOTAL SHEETS	SHEET NO.
80	FAI 80 21 STRUCTURE 2	WILL	1230	151
		CONTRACT NO. 62R23		
	ILLINOIS	FED. AID PROJECT		

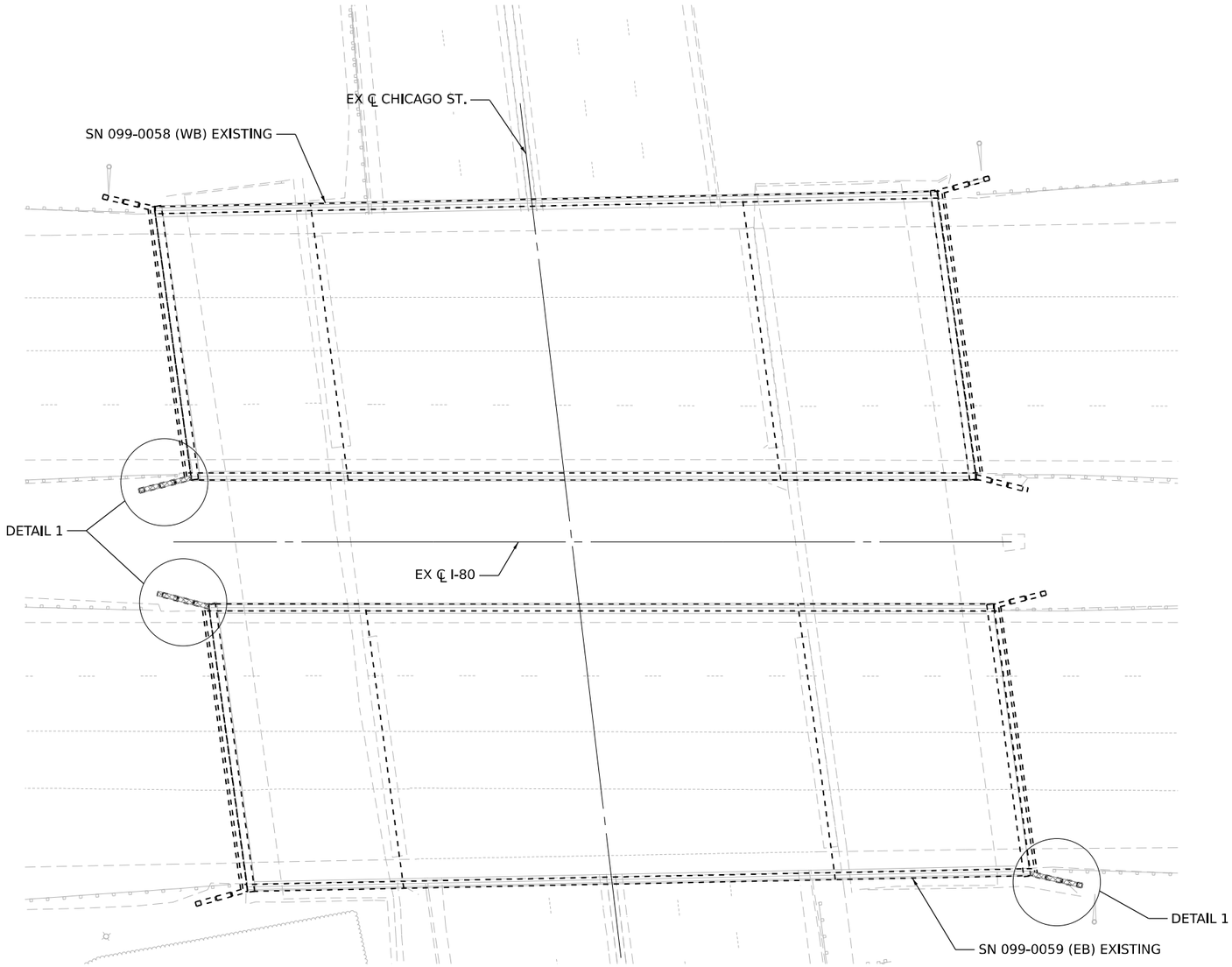

FLARED WING REMOVAL PLAN

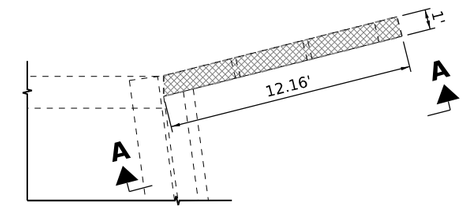

DETAIL 1

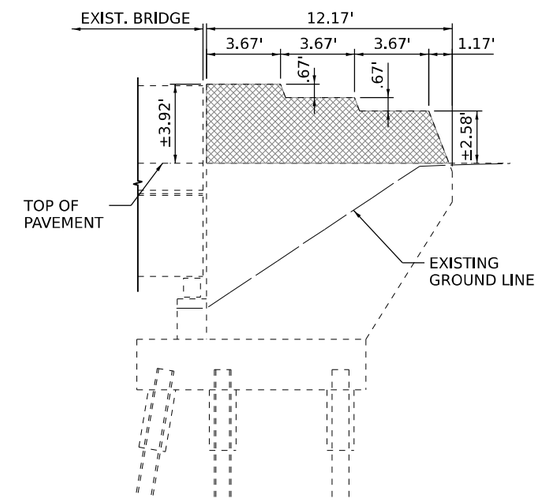

VIEW A-A

NOTES:

1. THE ENDS OF EXISTING REINFORCEMENT BARS WHICH ARE CUT AND EXPOSED SHALL BE COATED WITH EPOXY. COST INCLUDED WITH "CONCRETE REMOVAL".

REMOVAL LEGEND

CONCRETE REMOVAL

MODEL: Default
FILE NAME: pw://transystems-pw.bentley.com:transyscorp-pw1-hosted/Documents/Projects_2018/CH401/401180022/03-WSP/CAD/62R23-RB-1/Sheets/CH401D162R23-sht-FAST-dydetail01-FlaredWingRemoval/Chicago

BURNS McDONNELL	USER NAME = USGP718052	DESIGNED - JAP	REVISED -	STATE OF ILLINOIS DEPARTMENT OF TRANSPORTATION	ROADWAY DETAILS FLARED WING REMOVAL	F.A.I. RTE.	SECTION	COUNTY	TOTAL SHEETS / SHEET NO.
		DRAWN - TMM	REVISED -			80	FAI 80 21 STRUCTURE 2	WILL	1230 / 152
	PLOT SCALE = 30.000 ' / in.	CHECKED - JIR	REVISED -					CONTRACT NO. 62R23	
	PLOT DATE = 11/5/2025	DATE - 11/7/2025	REVISED -		SCALE: NTS / SHEET 3 OF 7 SHEETS / STA. TO STA.		ILLINOIS	FED. AID PROJECT	

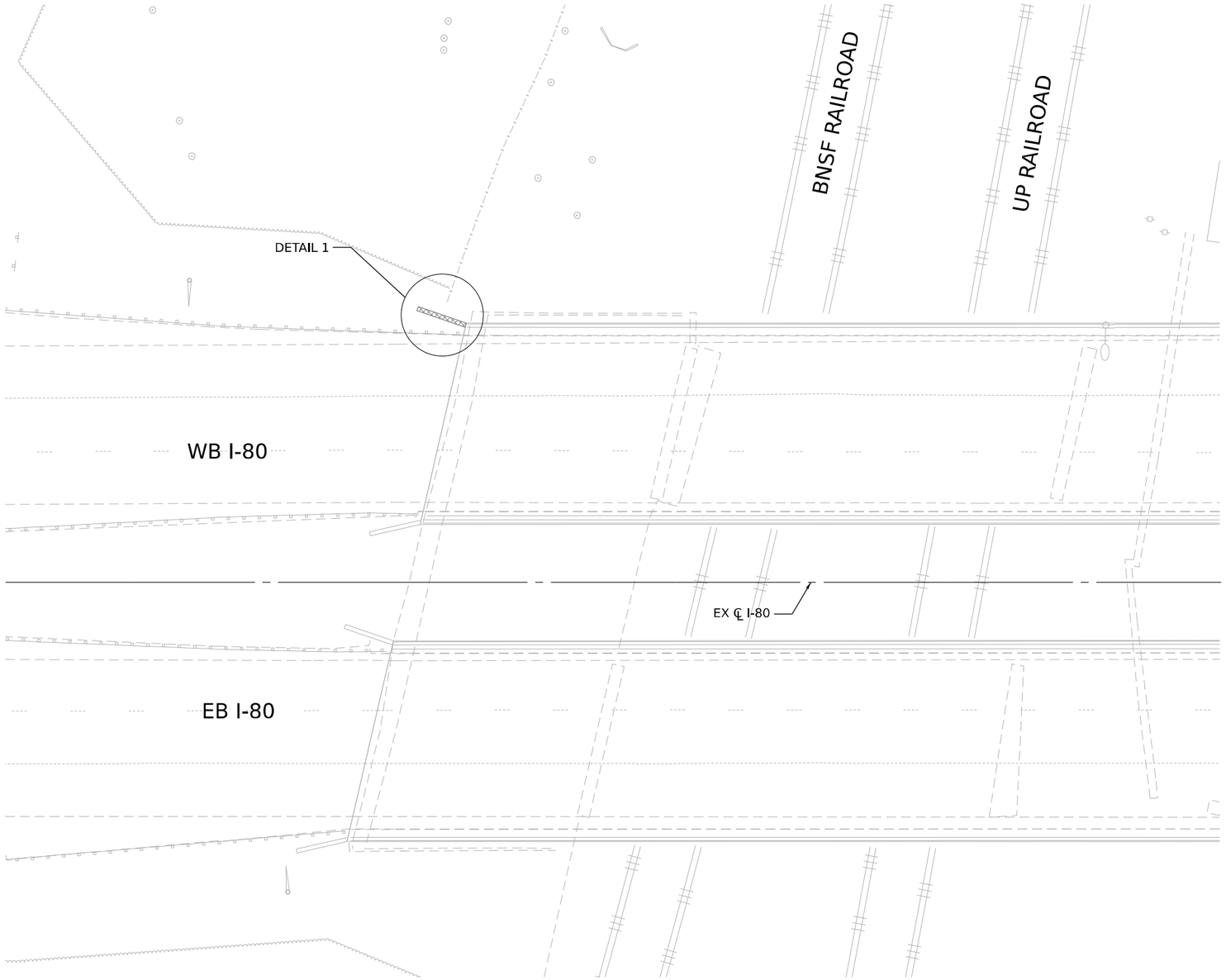

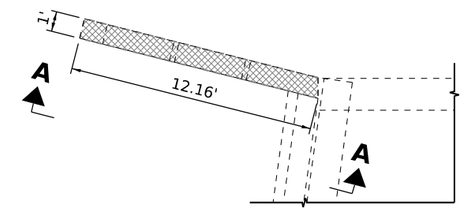

DETAIL 1

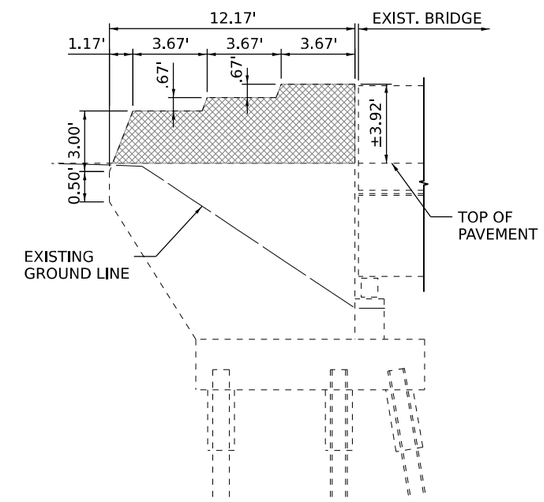

VIEW A-A

N

FLARED WING REMOVAL PLAN

NOTES:

1. THE ENDS OF EXISTING REINFORCEMENT BARS WHICH ARE CUT AND EXPOSED SHALL BE COATED WITH EPOXY. COST INCLUDED WITH "CONCRETE REMOVAL".

REMOVAL LEGEND

CONCRETE REMOVAL

MODEL: Default
FILE NAME: pw://transystems-pw.bentley.com:transyscorp-pw1-hosted/Documents/Projects_2018/CH401/401180022/03-WSP/CAD/62R23-RB-1/Sheets/Civil/0162R23-sht-EAST-rdydetail02-FlaredWingRemovalGardner

BURNS McDONNELL	USER NAME = USGP718052	DESIGNED - JAP	REVISED -	STATE OF ILLINOIS DEPARTMENT OF TRANSPORTATION	ROADWAY DETAILS FLARED WING REMOVAL			F.A.I. RTE.	SECTION	COUNTY	TOTAL SHEETS / SHEET NO.
		DRAWN - TMM	REVISED -					80	FAI 80 21 STRUCTURE 2	WILL	1230 / 153
	PLOT SCALE = 30.000 ' / in.	CHECKED - JIR	REVISED -							CONTRACT NO. 62R23	
	PLOT DATE = 11/5/2025	DATE - 11/7/2025	REVISED -		SCALE: NTS	SHEET 4 OF 7 SHEETS	STA. TO STA.		ILLINOIS	FED. AID PROJECT	

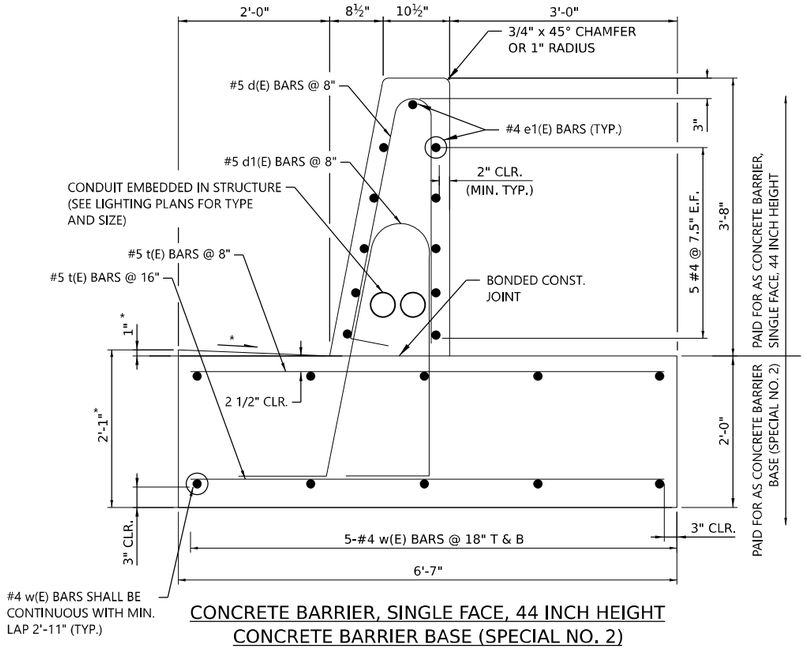

CONCRETE BARRIER, SINGLE FACE, 44 INCH HEIGHT
CONCRETE BARRIER BASE (SPECIAL NO. 2)

* AS REQUIRED TO MATCH
SHOULDER CROSS SLOPE

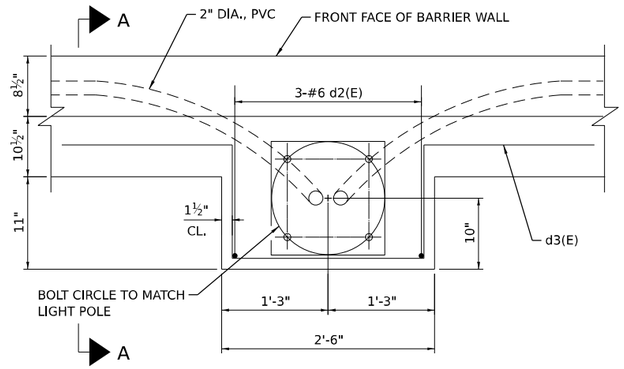

LIGHT POLE BUMPOUT PLAN

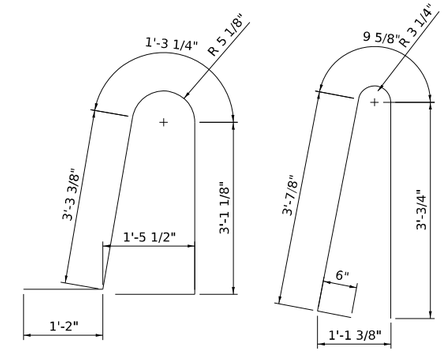

BAR d1(E) BAR d(E)

BENDING DIAGRAMS

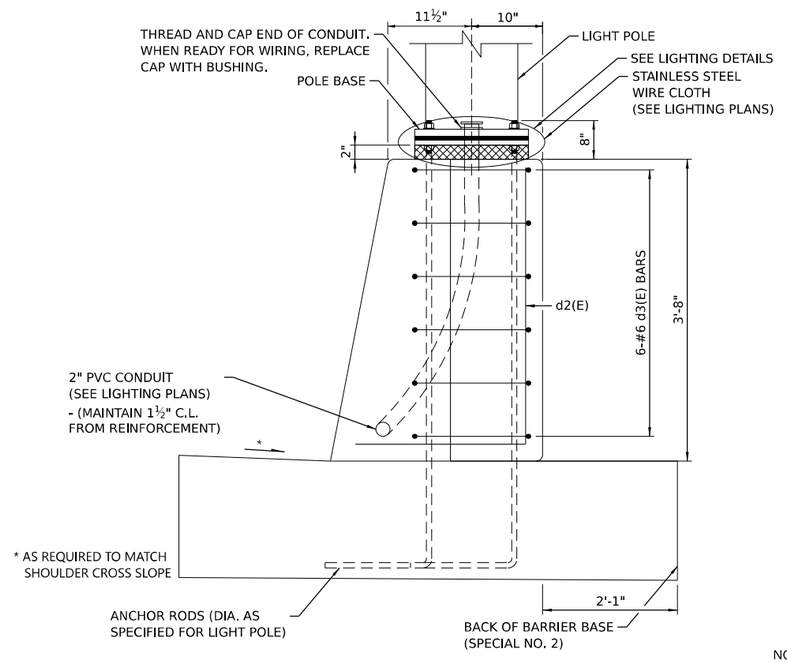

SECTION A-A

(REINFORCEMENT IN SLAB AND BARRIER NOT SHOWN FOR CLARITY)

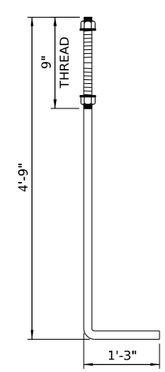

ANCHOR ROD

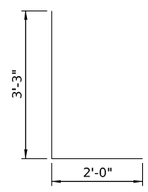

BAR d2(E)

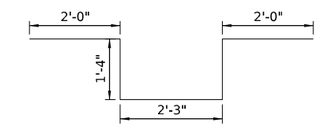

BAR d3(E)

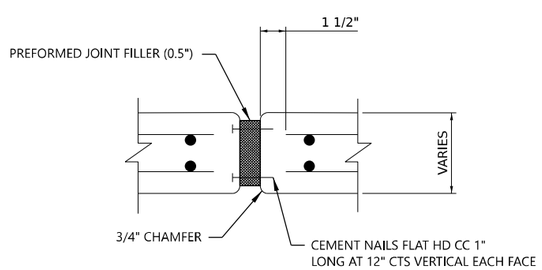

EXPANSION JOINT

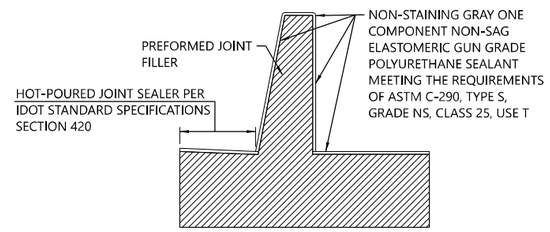

SINGLE FACE 44 INCH HEIGHT BARRIER
EXPANSION JOINT

NOTES:

1. 1" DEEP CONTRACTION JOINTS SHALL BE CONSTRUCTED IN BOTH THE REINFORCED CONCRETE BARRIER WALL AND BASE. CONTRACTION JOINTS SHALL ALSO BE CONSTRUCTED AT BOTH SIDES OF ALL DRAINAGE STRUCTURES. MAXIMUM CONTRACTION JOINT SPACING SHALL BE 30'-0".
2. CONTRACTION JOINTS SHALL BE FORMED BY A GROOVE 1/8", EITHER IN THE PLASTIC CONCRETE OR SAWED AFTER THE CONCRETE HAS SET.
3. REINFORCEMENT BARS DESIGNATED "(E)" SHALL BE EPOXY COATED.
4. REINFORCEMENT BARS BENDING DETAILS SHALL BE IN ACCORDANCE WITH THE "MANUAL OF STANDARD PRACTICE FOR DETAILING REINFORCED CONCRETE STRUCTURES", ACI 315, LATEST EDITION. REINFORCEMENT BAR BENDING DIMENSIONS ARE OUT TO OUT. E. F. DENOTES EACH FACE.
5. AT DRAINAGE STRUCTURES, CUT FOOTING BARS TO FIT. ADD AN ADDITIONAL PAIR OF d, d1 AND t BARS ON EACH SIDE OF THE DRAINAGE STRUCTURE.
6. EXPANSION JOINTS SHALL BE CONSTRUCTED IN BARRIER WALL AT A MAXIMUM JOINT SPACING OF 90'-0" AND A MINIMUM JOINT SPACING OF 40'-0".
7. WHEN DRAINAGE STRUCTURES PLACE WITHIN SINGLE-FACE CONCRETE BARRIERS, PLACE THEM BELOW THE BARRIER BASE SLAB USING ADJUSTMENT RINGS FOR SLAB THICKNESS. IF NOT FEASIBLE, CONTRACTOR TO PROVIDE SUPPLEMENTAL REINFORCEMENT AROUND THE STRUCTURE TO MAINTAIN THE REQUIRED BARRIER TEST LEVEL.

CONTRACTOR ACCESS DETAIL

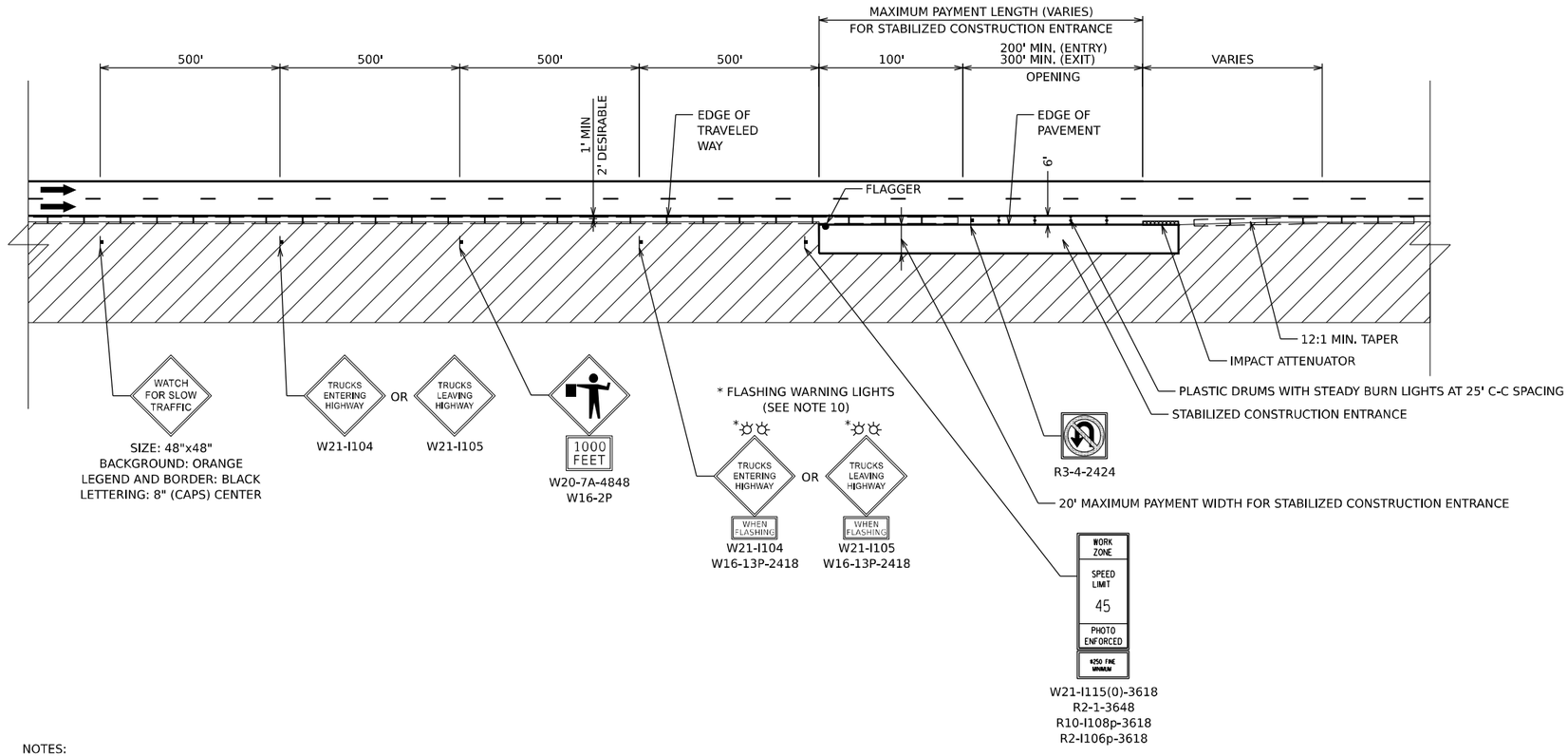

LEGEND

- FLAGGER
- CONSTRUCTION SIGN
- DIRECTION OF TRAFFIC
- WORK ZONE
- DRUMS

NOTES:

1. CONTRACTOR ACCESS LOCATIONS HAVE NOT BEEN SHOWN ON THE PLANS AND SHALL BE COORDINATED WITH THE ENGINEER PRIOR TO INSTALLATION.
2. PROVISIONAL QUANTITIES FOR TEMPORARY CONCRETE BARRIER, RELOCATE TEMPORARY CONCRETE BARRIER, IMPACT ATTENUATOR, RELOCATE IMPACT ATTENUATOR AND TEMPORARY PAVEMENT MARKINGS HAVE BEEN ADDED TO THE CONTRACT TO ALLOW FOR THE INSTALLATION AND RELOCATION OF CONTRACTOR ACCESS.
3. WHEN CONTRACTOR ACCESS TO WORK ZONE IS ON OPPOSITE SIDE FROM SHOWN, ALL INSTALLATIONS ARE MIRRORED.
4. THE CONTRACTOR IS ADVISED THAT THE TRANSVERSE SLOPE OF THE STABILIZED CONSTRUCTION ENTRANCE WILL VARY THROUGHOUT THE CONTRACT.
5. THE CONTRACTOR SHALL BE RESPONSIBLE FOR MAINTAINING DRAINAGE WITHIN THE WORK ZONE.
6. ALL SIGNS SHALL BE REMOVED OR TURNED AWAY FROM TRAFFIC AND THE EXIT AND ENTRY OPENINGS SHALL BE CLOSED WHEN THE FLAGGING OPERATION CEASES. NON OPERATING EQUIPMENT SHALL COMPLY WITH ARTICLE 701.11
7. EXITING THE WORK ZONE AT ANY PLACE OTHER THAN AT A WORK ZONE EXIT OPENING WILL BE PROHIBITED.
8. ALL VEHICLES SHALL ENTER THE WORK ZONE AT ENTRY OPENINGS, USING THEIR TURN SIGNALS TO WARN MOTORISTS.
9. FLAGGERS SHALL NOT STOP TRAFFIC OR DIRECT TRAFFIC INTO AN ADJACENT LANE.
10. THE CONTRACTOR SHALL BE RESPONSIBLE FOR PROPER OPERATION OF THE FLASHING WARNING LIGHTS WHEN VEHICLES ARE ENTERING OR LEAVING THE WORK ZONE.
11. ALL SIGNING AS SHOWN IN THIS CONTRACTOR ACCESS DETAIL SHALL BE INCLUDED IN THE COST OF TRAFFIC CONTROL AND PROTECTION (EXPRESSWAYS).

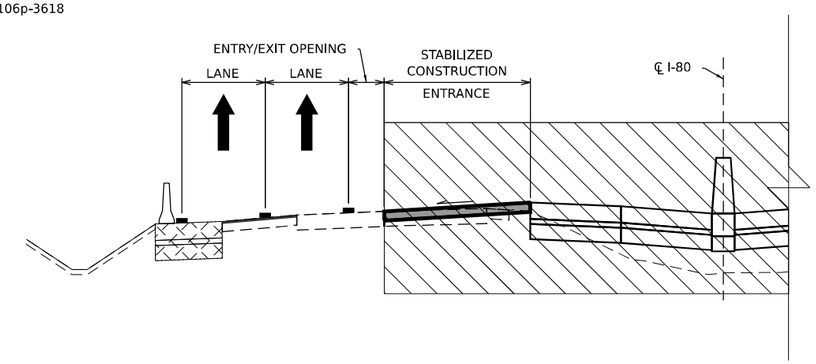

MODEL: Default
FILE NAME: pw://transystems-pw.bentley.com:transyscorp-pw1-hosted/Documents/Projects_2018/CH401/401180022/03-WSP/CAD/62R23-RB-1/Sheets/Civil/0162R23-ih-EAST-rdydetail05-ContractorAccess

BURNS McDONNELL	USER NAME = USGP718052	DESIGNED - JAP	REVISED -	STATE OF ILLINOIS DEPARTMENT OF TRANSPORTATION	ROADWAY DETAILS CONTRACTOR ACCESS	F.A.I. RTE.	SECTION	COUNTY	TOTAL SHEETS	SHEET NO.
		DRAWN - TMM	REVISED -			80	FAI 80 21 STRUCTURE 2	WILL	1230	155
	PLOT SCALE = 10.000 ' / in.	CHECKED - JIR	REVISED -					CONTRACT NO. 62R23		
	PLOT DATE = 11/5/2025	DATE - 11/7/2025	REVISED -		SCALE: NTS / SHEET 6 OF 7 SHEETS / STA. / TO STA.		ILLINOIS	FED. AID PROJECT		

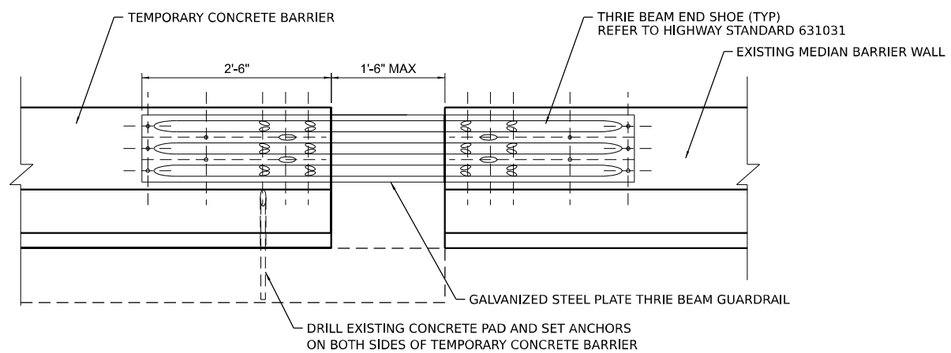

TEMPORARY CONCRETE BARRIER CONNECTION DETAIL

NOTES:

1. THE TEMPORARY CONCRETE BARRIER SHALL BE INSTALLED SUCH THAT IT IS FLUSH WITH THE EXISTING BARRIER WALL TO AVOID BLUNT END CONDITIONS.
2. THIS DETAIL IS TO CONNECT TEMPORARY CONCRETE BARRIER TO EXISTING BARRIER AS SHOWN ON THE MOT PLANS.
3. THE CONNECTION BETWEEN THE TEMPORARY CONCRETE BARRIER AND EXISTING BARRIER WALL SHALL BE INCLUDED IN THE COST FOR TEMPORARY CONCRETE BARRIER. NO ADDITIONAL COMPENSATION WILL BE ALLOWED.

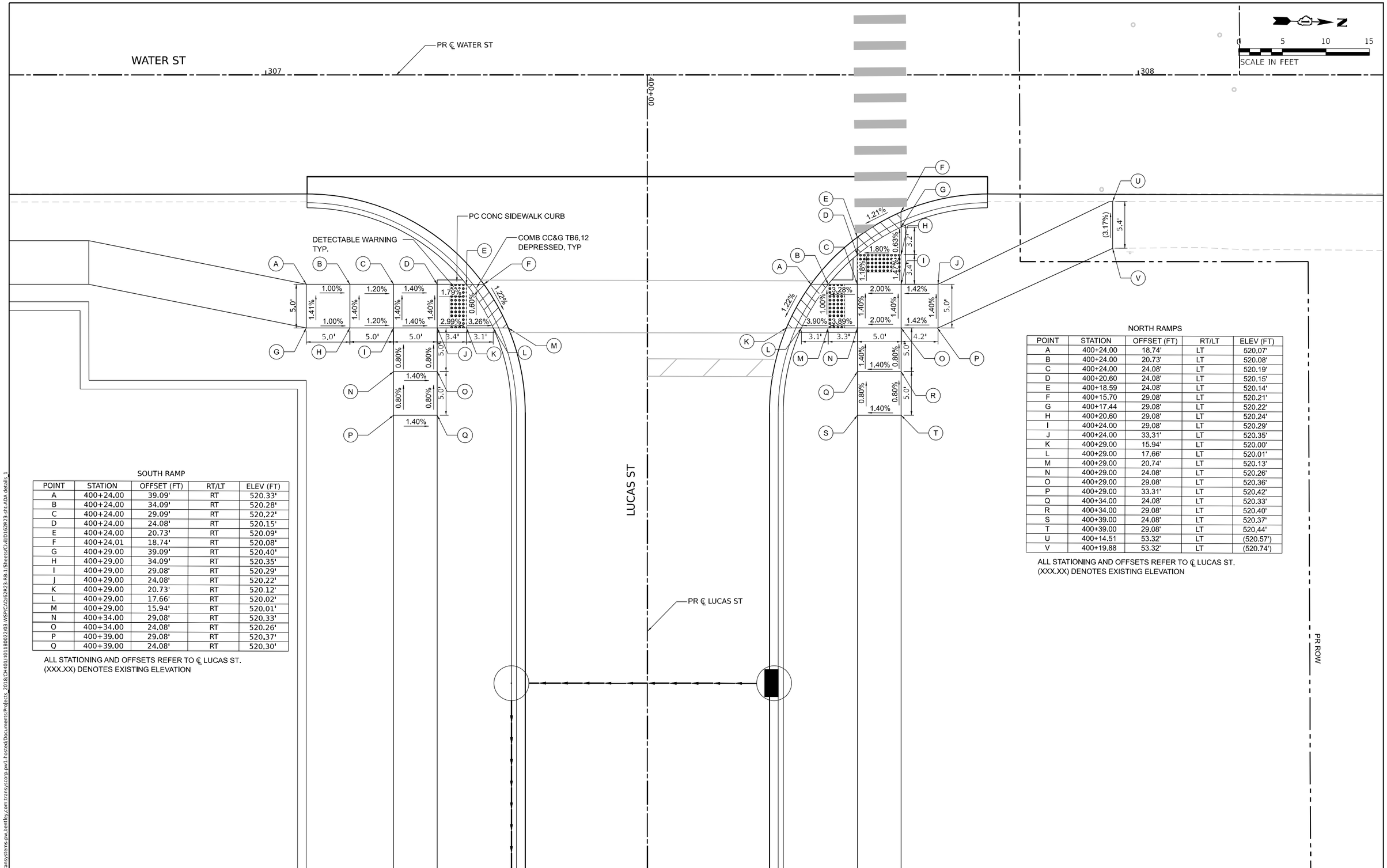

NORTH RAMPS

POINT	STATION	OFFSET (FT)	RT/LT	ELEV (FT)
A	400+24.00	18.74'	LT	520.07'
B	400+24.00	20.73'	LT	520.08'
C	400+24.00	24.08'	LT	520.19'
D	400+20.60	24.08'	LT	520.15'
E	400+18.59	24.08'	LT	520.14'
F	400+15.70	29.08'	LT	520.21'
G	400+17.44	29.08'	LT	520.22'
H	400+20.60	29.08'	LT	520.24'
I	400+24.00	29.08'	LT	520.29'
J	400+24.00	33.31'	LT	520.35'
K	400+29.00	15.94'	LT	520.00'
L	400+29.00	17.66'	LT	520.01'
M	400+29.00	20.74'	LT	520.13'
N	400+29.00	24.08'	LT	520.26'
O	400+29.00	29.08'	LT	520.36'
P	400+29.00	33.31'	LT	520.42'
Q	400+34.00	24.08'	LT	520.33'
R	400+34.00	29.08'	LT	520.40'
S	400+39.00	24.08'	LT	520.37'
T	400+39.00	29.08'	LT	520.44'
U	400+14.51	53.32'	LT	(520.57')
V	400+19.88	53.32'	LT	(520.74')

ALL STATIONING AND OFFSETS REFER TO ℄ LUCAS ST.
(XXX.XX) DENOTES EXISTING ELEVATION

SOUTH RAMP

POINT	STATION	OFFSET (FT)	RT/LT	ELEV (FT)
A	400+24.00	39.09'	RT	520.33'
B	400+24.00	34.09'	RT	520.28'
C	400+24.00	29.09'	RT	520.22'
D	400+24.00	24.08'	RT	520.15'
E	400+24.00	20.73'	RT	520.09'
F	400+24.01	18.74'	RT	520.08'
G	400+29.00	39.09'	RT	520.40'
H	400+29.00	34.09'	RT	520.35'
I	400+29.00	29.08'	RT	520.29'
J	400+29.00	24.08'	RT	520.22'
K	400+29.00	20.73'	RT	520.12'
L	400+29.00	17.66'	RT	520.02'
M	400+29.00	15.94'	RT	520.01'
N	400+34.00	29.08'	RT	520.33'
O	400+34.00	24.08'	RT	520.26'
P	400+39.00	29.08'	RT	520.37'
Q	400+39.00	24.08'	RT	520.30'

ALL STATIONING AND OFFSETS REFER TO ℄ LUCAS ST.
(XXX.XX) DENOTES EXISTING ELEVATION

MODEL: Default
FILE NAME: pw://transystems-pw.bentley.com:transyscorp-pw1-hosted/Documents/Projects_2018/CH401/401180022/03-WSP/CAD/62R23-RB-1/Sheets/CivilD162R23-sht-ADA details_1

WSP USA Inc.
20 N. LASALLE STREET
SUITE 4200
CHICAGO, IL 60602
TEL: (312) 782-8150

USER NAME = USGP718052	DESIGNED - HA	REVISED -	
	DRAWN - DJ	REVISED -	
PLOT SCALE = 10.000 ' / in.	CHECKED - KD	REVISED -	
PLOT DATE = 11/5/2025	DATE - 11/7/2025	REVISED -	

STATE OF ILLINOIS
DEPARTMENT OF TRANSPORTATION

ADA RAMP DETAILS
LUCAS STREET & WATER STREET

SCALE: 1"=5' | SHEET 1 OF 5 SHEETS | STA. | TO STA.

F.A.I. RTE.	SECTION	COUNTY	TOTAL SHEETS	SHEET NO.
80	FAI 80 21 STRUCTURE 2	WILL	1230	157
		CONTRACT NO. 62R23		
	ILLINOIS	FED. AID PROJECT		

POINT	STATION	OFFSET (FT)	RT/LT	ELEV (FT)
A	307+67.82	29.00'	LT	520.60'
B	307+72.82	29.00'	LT	520.58'
C	307+87.25	30.20'	LT	520.49'
D	307+92.25	30.20'	LT	520.39'
E	307+94.33	30.20'	LT	520.35'
F	307+95.82	30.20'	LT	520.32'
G	307+97.41	30.20'	LT	(520.31')
H	307+67.82	24.00'	LT	520.53'
I	307+72.82	24.00'	LT	520.51'
J	307+87.25	25.20'	LT	520.56'
K	307+94.33	25.20'	LT	520.37'
L	307+96.06	25.20'	LT	(520.36')
M	307+67.82	15.56'	LT	520.36'
N	307+72.82	15.53'	LT	520.34'
O	307+67.82	13.94'	LT	(520.35')
P	307+72.82	13.93'	LT	(520.33')

ALL STATIONING AND OFFSETS REFER TO ℄ WATER ST.
(XXX.XX) DENOTES EXISTING ELEVATION

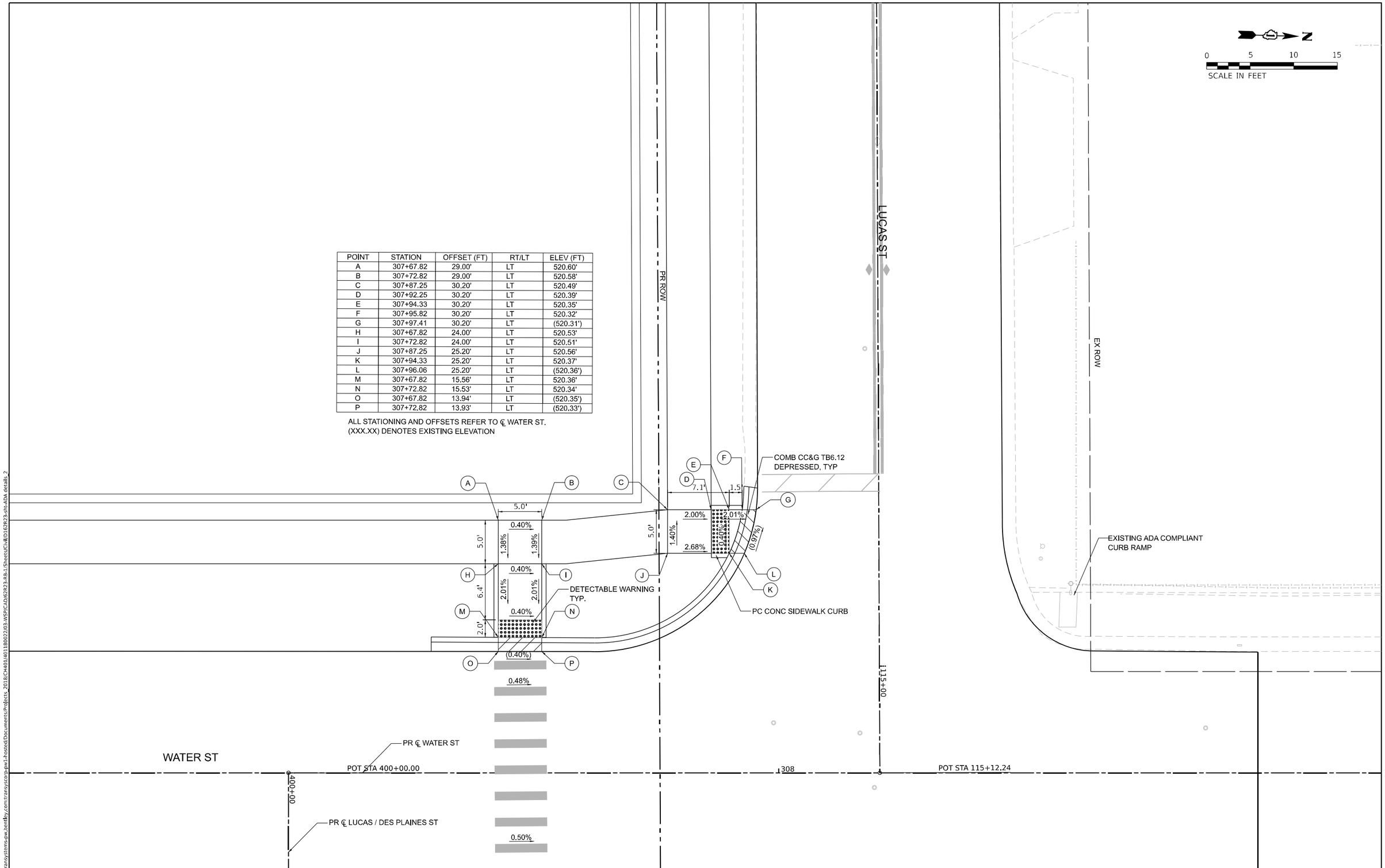

MODEL: Default
FILE NAME: pw://transystems-pw.bentley.com:transyscorp-pw1-hosted/Documents/Projects_2018/CH401/401180022/03-WSP/CAD/62R23-RB-1/Sheets/CH401D162R23-sh1-ADA details_2

WSP USA Inc.
30 N. LASALLE STREET
SUITE 4200
CHICAGO, IL 60602
TEL: (312) 782-8150

USER NAME = USGP718052	DESIGNED - HA	REVISED -
	DRAWN - DJ	REVISED -
PLOT SCALE = 10.000 ' / in.	CHECKED - KD	REVISED -
PLOT DATE = 11/5/2025	DATE - 11/7/2025	REVISED -

STATE OF ILLINOIS
DEPARTMENT OF TRANSPORTATION

ADA RAMP DETAILS
WATER STREET & LUCAS STREET

SCALE:1"=5' | SHEET 2 OF 5 SHEETS | STA. | TO STA.

F.A.I. RTE.	SECTION	COUNTY	TOTAL SHEETS	SHEET NO.
80	FAI 80 21 STRUCTURE 2	WILL	1230	158

CONTRACT NO. 62R23

ILLINOIS | FED. AID PROJECT

SCALE IN FEET

0 5 10 15

SOUTH RAMP

POINT	STATION	OFFSET (FT)	RT/LT	ELEV (FT)
A	102+62.99	27.08'	LT	519.53'
B	102+69.99	27.08'	LT	519.46'
C	102+72.97	27.08'	LT	519.44'
D	102+74.69	27.08'	LT	(519.43')
E	102+62.99	22.08'	LT	519.46'
F	102+69.99	22.08'	LT	519.36'
G	102+71.95	22.08'	LT	(519.21')

ALL STATIONING AND OFFSETS REFER TO ℄ RIVER ST.
(XXX.XX) DENOTES EXISTING ELEVATION

NORTH RAMP

POINT	STATION	OFFSET (FT)	RT/LT	ELEV (FT)
A	103+03.83	27.08'	LT	(519.71')
B	103+05.53	27.08'	LT	519.72'
C	103+08.18	27.08'	LT	519.74'
D	103+15.17	27.08'	LT	519.82'
E	103+06.30	22.08'	LT	(519.57')
F	103+08.17	22.08'	LT	519.64'
G	103+15.17	22.08'	LT	519.75'

ALL STATIONING AND OFFSETS REFER TO ℄ RIVER ST.
(XXX.XX) DENOTES EXISTING ELEVATION

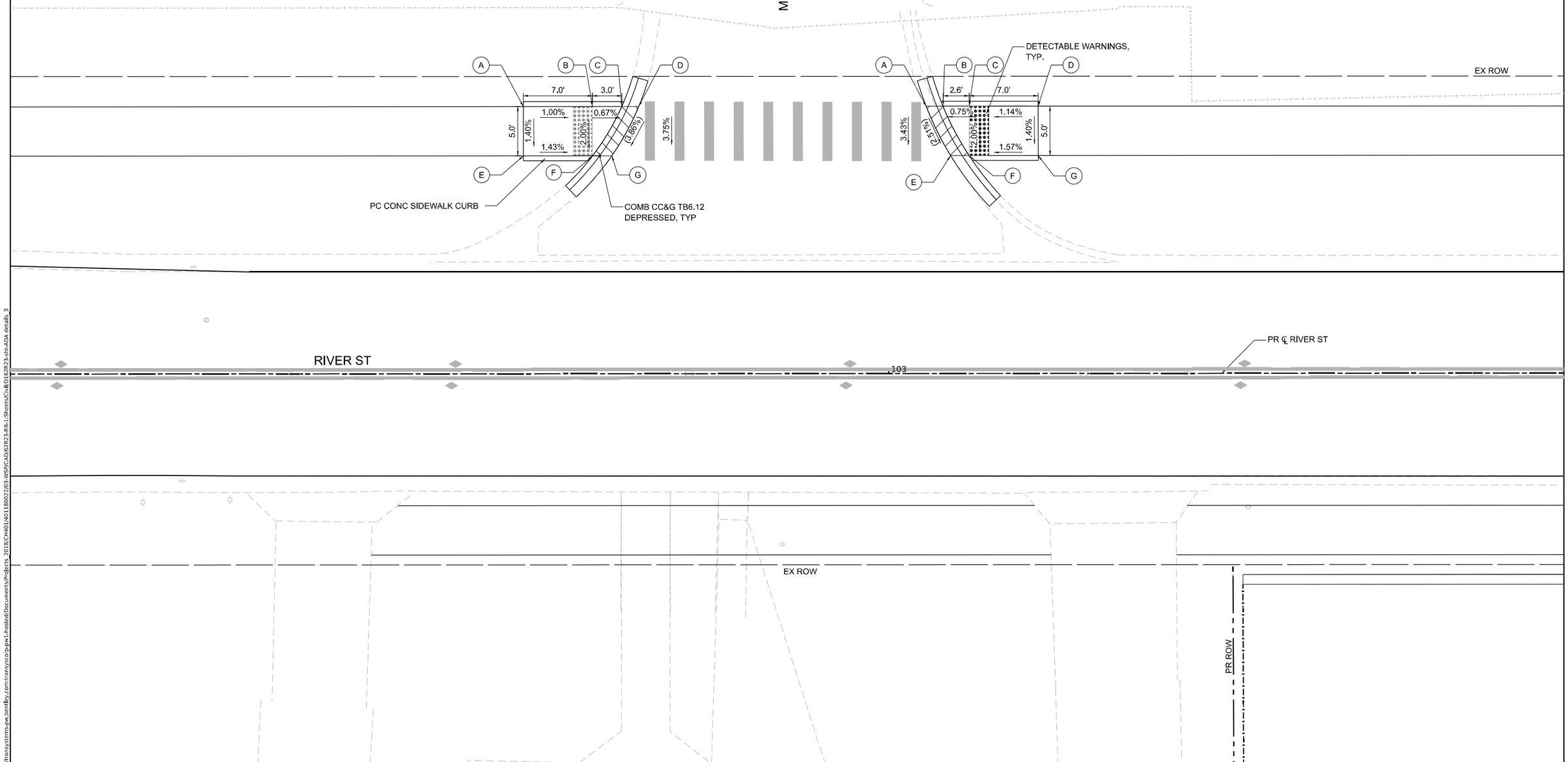

MODEL: Default
FILE NAME: pw://transystems-pw.bentley.com:transyscorp-pw1-hosted/Documents/Projects_2018/CH401/401180022/03-WSP/CAD/62R23-RB-1/Sheets/Civil/D16fR23-sh-ADA details_3

WSP USA Inc.
30 N. LASALLE STREET
SUITE 4200
CHICAGO, IL 60602
TEL: (312) 782-8150

USER NAME = USGP718052	DESIGNED - HA	REVISED -	
	DRAWN - DJ	REVISED -	
PLOT SCALE = 10.000 ' / in.	CHECKED - KD	REVISED -	
PLOT DATE = 11/5/2025	DATE - 11/7/2025	REVISED -	

STATE OF ILLINOIS
DEPARTMENT OF TRANSPORTATION

ADA RAMP DETAILS
RIVER STREET & McKINLEY STREET

SCALE:1"=5' | SHEET 3 OF 5 SHEETS | STA. TO STA.

F.A.I. RTE.	SECTION	COUNTY	TOTAL SHEETS	SHEET NO.
80	FAI 80 21 STRUCTURE 2	WILL	1230	159
		CONTRACT NO. 62R23		
	ILLINOIS	FED. AID PROJECT		

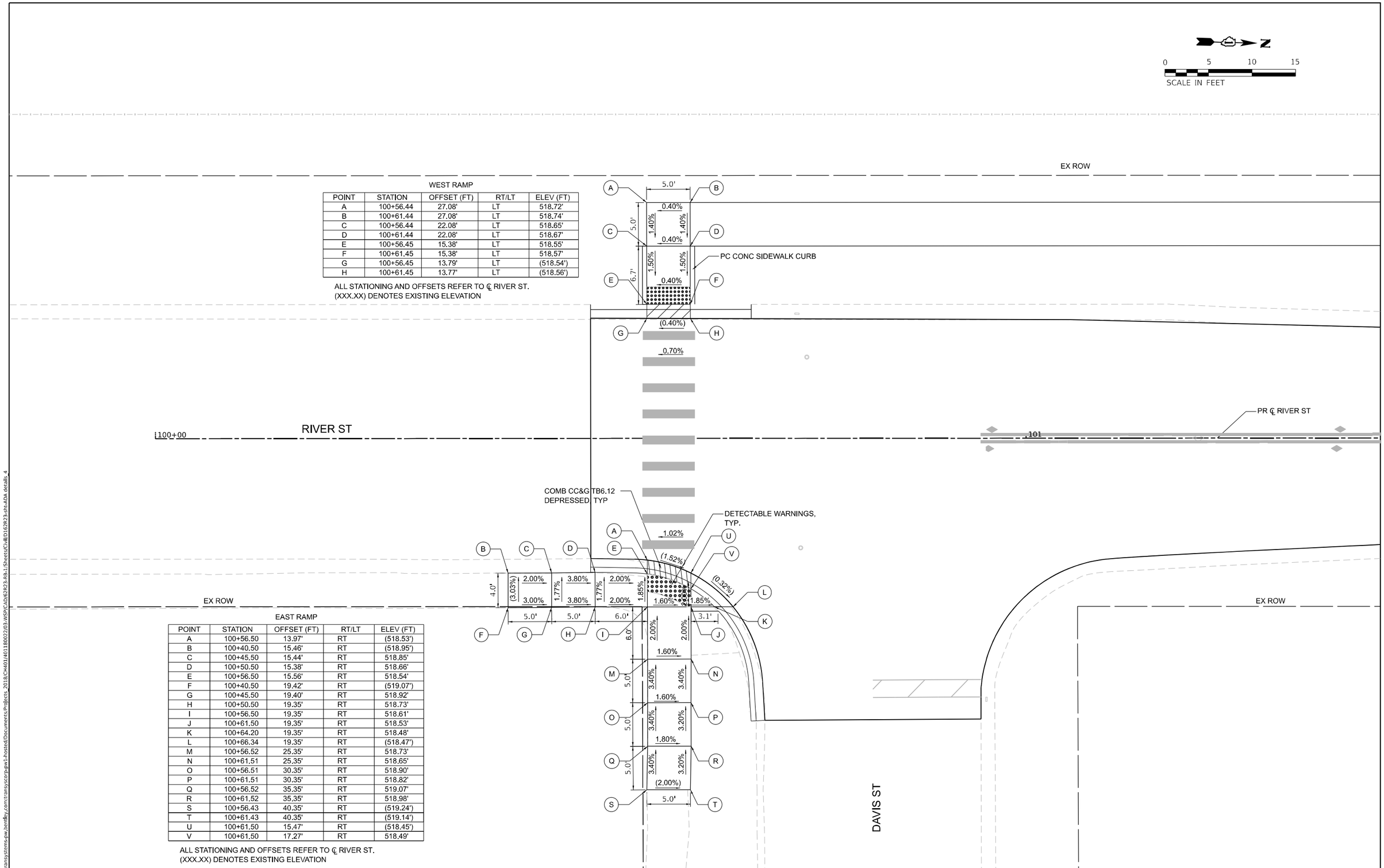

WEST RAMP

POINT	STATION	OFFSET (FT)	RT/LT	ELEV (FT)
A	100+56.44	27.08'	LT	518.72'
B	100+61.44	27.08'	LT	518.74'
C	100+56.44	22.08'	LT	518.65'
D	100+61.44	22.08'	LT	518.67'
E	100+56.45	15.38'	LT	518.55'
F	100+61.45	15.38'	LT	518.57'
G	100+56.45	13.79'	LT	(518.54')
H	100+61.45	13.77'	LT	(518.56')

ALL STATIONING AND OFFSETS REFER TO ℄ RIVER ST.
(XXX.XX) DENOTES EXISTING ELEVATION

EAST RAMP

POINT	STATION	OFFSET (FT)	RT/LT	ELEV (FT)
A	100+56.50	13.97'	RT	(518.53')
B	100+40.50	15.46'	RT	(518.95')
C	100+45.50	15.44'	RT	518.85'
D	100+50.50	15.38'	RT	518.66'
E	100+56.50	15.56'	RT	518.54'
F	100+40.50	19.42'	RT	(519.07')
G	100+45.50	19.40'	RT	518.92'
H	100+50.50	19.35'	RT	518.73'
I	100+56.50	19.35'	RT	518.61'
J	100+61.50	19.35'	RT	518.53'
K	100+64.20	19.35'	RT	518.48'
L	100+66.34	19.35'	RT	(518.47')
M	100+56.52	25.35'	RT	518.73'
N	100+61.51	25.35'	RT	518.65'
O	100+56.51	30.35'	RT	518.90'
P	100+61.51	30.35'	RT	518.82'
Q	100+56.52	35.35'	RT	519.07'
R	100+61.52	35.35'	RT	518.98'
S	100+56.43	40.35'	RT	(519.24')
T	100+61.43	40.35'	RT	(519.14')
U	100+61.50	15.47'	RT	(518.45')
V	100+61.50	17.27'	RT	518.49'

ALL STATIONING AND OFFSETS REFER TO ℄ RIVER ST.
(XXX.XX) DENOTES EXISTING ELEVATION

MODEL: Default
FILE NAME: pw://transystems-pw.bentley.com:transyscorp-pw1-hosted/Documents/Projects_2018/CH401/401180022/03-WSP/CAD/62R23-RB-1/Sheets/CivilD162R23-ilt-ADA details_4

WSP USA Inc.
30 N. LASALLE STREET
SUITE 4200
CHICAGO, IL 60602
TEL: (312) 782-8150

USER NAME = USGP718052	DESIGNED - HA	REVISED -
	DRAWN - DJ	REVISED -
PLOT SCALE = 10.000 ' / in.	CHECKED - KD	REVISED -
PLOT DATE = 11/5/2025	DATE - 11/7/2025	REVISED -

STATE OF ILLINOIS
DEPARTMENT OF TRANSPORTATION

ADA RAMP DETAILS
RIVER STREET & DAVIS STREET

SCALE: 1"=5' | SHEET 4 OF 5 SHEETS | STA. | TO STA.

F.A.I. RTE.	SECTION	COUNTY	TOTAL SHEETS	SHEET NO.
80	FAI 80 21 STRUCTURE 2	WILL	1230	160
		CONTRACT NO. 62R23		
		ILLINOIS	FED. AID PROJECT	

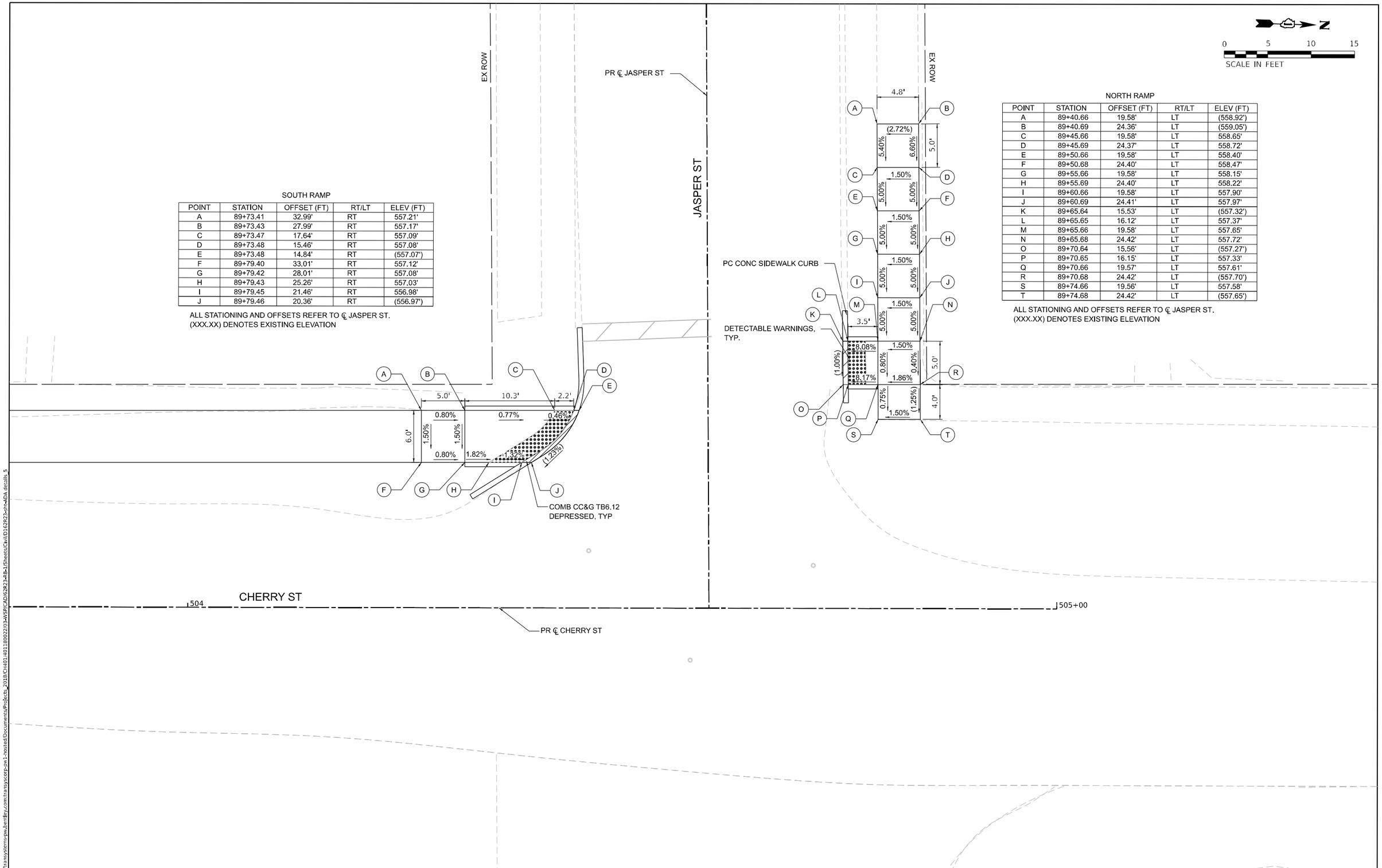

SOUTH RAMP

POINT	STATION	OFFSET (FT)	RT/LT	ELEV (FT)
A	89+73.41	32.99'	RT	557.21'
B	89+73.43	27.99'	RT	557.17'
C	89+73.47	17.64'	RT	557.09'
D	89+73.48	15.46'	RT	557.08'
E	89+73.48	14.84'	RT	(557.07')
F	89+79.40	33.01'	RT	557.12'
G	89+79.42	28.01'	RT	557.08'
H	89+79.43	25.26'	RT	557.03'
I	89+79.45	21.46'	RT	556.98'
J	89+79.46	20.36'	RT	(556.97')

ALL STATIONING AND OFFSETS REFER TO ℄ JASPER ST.
(XXX.XX) DENOTES EXISTING ELEVATION

NORTH RAMP

POINT	STATION	OFFSET (FT)	RT/LT	ELEV (FT)
A	89+40.66	19.58'	LT	(558.92')
B	89+40.69	24.36'	LT	(559.05')
C	89+45.66	19.58'	LT	558.65'
D	89+45.69	24.37'	LT	558.72'
E	89+50.66	19.58'	LT	558.40'
F	89+50.68	24.40'	LT	558.47'
G	89+55.66	19.58'	LT	558.15'
H	89+55.69	24.40'	LT	558.22'
I	89+60.66	19.58'	LT	557.90'
J	89+60.69	24.41'	LT	557.97'
K	89+65.64	15.53'	LT	(557.32')
L	89+65.65	16.12'	LT	557.37'
M	89+65.66	19.58'	LT	557.65'
N	89+65.68	24.42'	LT	557.72'
O	89+70.64	15.56'	LT	(557.27')
P	89+70.65	16.15'	LT	557.33'
Q	89+70.66	19.57'	LT	557.61'
R	89+70.68	24.42'	LT	(557.70')
S	89+74.66	19.56'	LT	557.58'
T	89+74.68	24.42'	LT	(557.65')

ALL STATIONING AND OFFSETS REFER TO ℄ JASPER ST.
(XXX.XX) DENOTES EXISTING ELEVATION

MODEL: Default
FILE NAME: pw://transystems-pw.bentley.com:transyscorp-pw1-hosted/Documents/Projects_2018/CH401 401180022/03-WSP/CAD/62R23-RB-1/Sheets/Civil/D162R23-ctrh-ADA-details_5

WSP USA Inc.
30 N. LASALLE STREET
SUITE 4200
CHICAGO, IL 60602
TEL: (312) 782-6150

USER NAME = USGP718052	DESIGNED - HA	REVISED -	
	DRAWN - DJ	REVISED -	
PLOT SCALE = 10.000 ' / in.	CHECKED - KD	REVISED -	
PLOT DATE = 11/5/2025	DATE - 11/7/2025	REVISED -	

STATE OF ILLINOIS
DEPARTMENT OF TRANSPORTATION

ADA RAMP DETAILS
CHERRY STREET & JASPER STREET

SCALE: 1"=5' | SHEET 5 OF 5 SHEETS | STA. TO STA.

F.A.I. RTE.	SECTION	COUNTY	TOTAL SHEETS	SHEET NO.
80	FAI 80 21 STRUCTURE 2	WILL	1230	161
		CONTRACT NO. 62R23		
	ILLINOIS	FED. AID PROJECT		

SUGGESTED STAGES OF CONSTRUCTION AND TRAFFIC CONTROL GENERAL NOTES

1. THE CONTRACTOR IS RESPONSIBLE FOR COORDINATING AND PROVIDING ACCESS POINTS TO THE WORK ZONE. ACCESS POINTS MUST BE APPROVED BY THE ENGINEER PRIOR TO INSTALLATION AND MUST BE COMPLETED ACCORDING TO TC-18. ANY SIGNING OR ADDITIONAL TRAFFIC CONTROL DEVICES REQUIRED TO PROVIDE CONTRACTOR ACCESS TO THE WORK ZONE IS INCLUDED IN THE COST OF "TRAFFIC CONTROL AND PROTECTION (EXPRESSWAYS)" AND WILL NOT BE PAID FOR SEPARATELY. ACCOMMODATIONS AND PROVISIONS FOR ADDITIONAL ENTRANCES SHALL BE AT THE EXPENSE OF THE CONTRACTOR.

2. THE CONTRACTOR SHALL INSTALL AND MAINTAIN PROPOSED AND TEMPORARY DRAINAGE SYSTEMS AND EROSION CONTROL MEASURES DURING STAGE CONSTRUCTION THROUGHOUT THE DURATION OF THE CONTRACT. SEE TEMPORARY DRAINAGE AND EROSION CONTROL PLANS.

3. THE CONTRACTOR IS RESPONSIBLE FOR MAINTAINING POSITIVE DRAINAGE ON THE JOB SITE DURING CONSTRUCTION.

4. THE CONTRACTOR SHALL PERFORM PAVEMENT PATCHING AND REPAIRS ON THE DESIGNATED DETOUR ROUTES BEFORE AND AFTER DETOURS ARE IN SERVICE. THE LOCATION AND QUANTITIES SHALL BE APPROVED BY THE ENGINEER. THE CONTRACTOR SHALL REFER TO THE DETOUR PLANS FOR THE DESIGNATED DETOUR ROUTES. NOMINAL QUANTITIES OF THIS WORK HAVE BEEN INCLUDED AS PART OF THE CONTRACT.

5. ALL TEMPORARY PAVEMENT MARKINGS SHOWING DETERIORATION AFTER 7 DAYS SHALL BE REPLACED BY THE CONTRACTOR AS DIRECTED BY THE ENGINEER. SUFFICIENT QUANTITIES FOR ONE PLACEMENT AND ONE REPLACEMENT HAVE BEEN PROVIDED FOR EACH STAGE. ALL MARKINGS THAT REQUIRE REPLACEMENT AFTER THE FIRST REPLACEMENT SHALL BE REPLACED BY THE CONTRACTOR AT HIS/HER OWN EXPENSE.

6. TEMPORARY PAVEMENT CROSS SLOPES SHALL MATCH THE CROSS SLOPE OF THE ADJACENT EXISTING OR PROPOSED PAVEMENT UNLESS OTHERWISE DIRECTED BY THE ENGINEER OR AS OTHERWISE SHOWN ON THE PLANS.

7. THE CONTRACTOR SHALL REQUEST AND GAIN APPROVAL FROM THE ILLINOIS DEPARTMENT OF TRANSPORTATION'S EXPRESSWAY TRAFFIC OPERATIONS ENGINEER AT WWW.IDOT.COM TWENTY-FOUR (24) HOURS IN ADVANCE OF ALL DAILY LANE, RAMP, AND SHOULDER CLOSURES AND 7 DAYS IN ADVANCE OF ALL PERMANENT AND WEEKEND CLOSURES ON ALL FREEWAYS AND/OR EXPRESSWAYS IN DISTRICT ONE. THIS ADVANCE NOTIFICATION IS CALCULATED BASED ON A WORKWEEK OF MONDAY THROUGH FRIDAY AND SHALL NOT INCLUDE WEEKENDS OR HOLIDAYS.

8. THE CONTRACTOR SHALL CONTACT KALPANA KANNAH-HOSADURGA, THE DISTRICT ONE TRAFFIC CONTROL SUPERVISOR AT KALPANA.KANNAN-HOSADURGA@ILLINOIS.GOV A MINIMUM OF 72 HOURS IN ADVANCE OF BEGINNING WORK.

9. THE CONTRACTOR IS DIRECTED TO THE FACT THAT OTHER SEPARATE CONTRACTS ARE, OR MAY BE, IN FORCE THAT INTERSECT THE LIMITS OF THIS PROJECT. THE CONTRACTOR SHALL COOPERATE WITH THE OTHER CONTRACTORS IN THE PHASING AND PERFORMANCE OF THIS WORK SO AS NOT TO DELAY, INTERRUPT, OR HINDER THE PROGRESS OR COMPLETION OF THE WORK BEING PERFORMED BY OTHER CONTRACTORS. THE CONTRACTOR SHALL TAKE INTO CONSIDERATION THE REQUIREMENTS OUTLINED IN THE SPECIAL PROVISION "CONTRACTOR COOPERATION" WHEN WORKING WITH OTHER CONTRACTORS AND THE DEPARTMENT. NO ADDITIONAL COMPENSATION WILL BE ALLOWED FOR COMPLIANCE WITH THE ABOVE REQUIREMENTS, NOR FOR ANY DELAYS OR INCONVENIENCES RESULTING FROM THE ACTIVITIES OF OTHER CONTRACTORS. SHOULD A CONFLICT ARISE BETWEEN THE CONTRACTORS WITH RESPECT TO SEQUENCE OF CONSTRUCTION OR MAINTENANCE OF TRAFFIC REQUIREMENTS, SAID CONFLICTS SHALL BE RESOLVED BY, OR AT THE DIRECTION OF THE ENGINEER.

10. THE CONTRACTOR SHALL COORDINATE ALL LANE CLOSURES WITH ADJACENT CONTRACTS TO ENSURE CONSISTENCY AND AVOID TRAFFIC CONTROL CONFLICTS. THIS WORK SHALL BE APPROVED BY THE ENGINEER. THE CONTRACTOR SHALL COORDINATE WITH CONTRACTS 62R22 AND 62F94 PRIOR TO REMOVING OR INSTALLING ADVANCED WARNING SIGNS FOR STAGE CHANGES ON I-80 MAINLINE.

11. WORK IS TO BE PERFORMED IN ACCORDANCE WITH "KEEPING THE EXPRESSWAY OPEN TO TRAFFIC" AND PER STATE AND DISTRICT 1 HIGHWAY STANDARDS FOR TRAFFIC CONTROL. ALL TRAFFIC CONTROL DEVICES AND SIGNAGE REQUIRED ON I-80, CENTER STREET, CHICAGO STREET, AND RAMPS SHALL BE IN ACCORDANCE WITH APPLICABLE IDOT DISTRICT 1 STANDARDS, IDOT HIGHWAY STANDARDS, AND THE CONTRACT PLANS. THIS WORK SHALL BE INCLUDED IN THE COST FOR "TRAFFIC CONTROL AND PROTECTION (EXPRESSWAYS)" AND WILL NOT BE PAID FOR SEPARATELY.

12. LANE CLOSURES, RAMP CLOSURES, SIGNING, PAVEMENT MARKINGS, AND BARRICADE PLACEMENT SHALL BE IN ACCORDANCE WITH THE LATEST HIGHWAY STANDARD DRAWINGS AND IDOT DISTRICT 1 STANDARD DETAILS AS APPLICABLE.

13. EXISTING PAVEMENT MARKINGS THAT CONFLICT WITH TEMPORARY PAVEMENT MARKINGS SHALL BE REMOVED AS DIRECTED BY THE ENGINEER. THE REMOVAL WILL BE MEASURED IN SQUARE FEET AND PAID FOR AS "PAVEMENT MARKING REMOVAL - WATER BLASTING". GRINDING IS PROHIBITED ON ALL PAVEMENT NOT BEING REPLACED. FINAL PAVEMENT MARKINGS WILL BE INSTALLED AT THE END OF LAST STAGE, UNLESS OTHERWISE NOTED IN THE PLANS.

14. ANY EXISTING SIGNS DENOTED WITHIN THE PLAN SET THAT DO NOT APPLY TO THE REVISED TRAFFIC PATTERNS SHALL BE REMOVED OR COVERED AS DIRECTED BY THE ENGINEER. THE COVERING OR REMOVAL OF GROUND MOUNTED/OVERHEAD SIGNS SHALL BE NON-DESTRUCTIVE IN NATURE AND WILL NOT BE MEASURED FOR PAYMENT BUT IS CONSIDERED INCLUDED IN THE CONTRACT UNIT PRICE FOR "TRAFFIC CONTROL AND PROTECTION (EXPRESSWAYS)" WHEN ON EXPRESSWAYS.

15. FOR I-80 AND RAMPS, THE CONTRACTOR WILL BE REQUIRED TO SET LANE CLOSURES IN ACCORDANCE WITH THE LATEST EDITION OF THE ILLINOIS HIGHWAY STANDARDS 701400, 701401 and 701428. FOR TRAFFIC CONTROL, INCLUDING BUT NOT LIMITED TO ALL APPLICABLE DISTRICT STANDARD DETAILS TC-08, TC-09, TC-10, TC-16, TC-17, TC-18, TC-22, TC-23 AND TC-33.

16. CHANGEABLE MESSAGE SIGNS SHALL BE INSTALLED TWO WEEKS PRIOR TO ALL ROAD CLOSURE, TRAFFIC STAGE CHANGES, AND NEW TRAFFIC SIGNAL TURN-ON EVENTS ON EACH APPROACH OF THE EFFECTED ROADWAY TO WARN MOTORISTS OF THE UPCOMING EVENT. THE SIGNS SHALL BE REMOVED TWO WEEKS THEREAFTER UNLESS THE SIGNS ARE NEEDED AGAIN FOR A SUBSEQUENT FUTURE EVENT THAT WILL OCCUR WITHIN 2 WEEKS ON THE SAME APPROACH OF THE EFFECTED ROADWAY. THE SIGN LOCATIONS SHALL BE (DETERMINED BY THE ENGINEER) PLACED AS DIRECTED BY THE ENGINEER.

17. MOVING OPERATIONS ALONG I-80 PER STATE STANDARD 701426 WILL NOT BE PERMITTED.

18. THE ANNUAL INSPECTION OF THE I-80 OVER DES PLAINES RIVER BRIDGES WILL BE PERFORMED BY IDOT OR ITS CONSULTANT IN MAY OF EACH YEAR. THE CONTRACTOR SHALL COORDINATE WITH THE DEPARTMENT AND MAKE MOT AND CONSTRUCTION ACTIVITY MODIFICATIONS TO ACCOMMODATE THE SCHEDULED INSPECTION AND PROVIDE THE NECESSARY DAILY LANE CLOSURES FOR THE INSPECTION OF BOTH WB AND EB DIRECTIONS. IT IS ANTICIPATED THE INSPECTIONS WILL BE PEFORMED OVER A FOUR-DAY PERIOD FOR EACH DIRECTION OF TRAVEL AND WILL OCCUR IN YEARS 2026, 2027, AND 2028. THE COST FOR COORDINATION, MODIFICATIONS REQUIRED TO MOT AND CONSTRUCTION ACTIVITIES, AND INSTALLATION AND REMOVAL OF DAILY LANE CLOSURES SHALL BE INCLUDED IN THE COST OF "TRAFFIC CONTROL AND PROTECTION (EXPRESSWAYS)".

19. THE CONTRACTOR SHALL VIDEO THE EXISTING CONDITIONS OF THE LOCAL STREETS IMPACTED BY CONSTRUCTION AND DETOURS TO DETERMINE REPAIRS NEEDED POST CONSTUCTION. THE REPAIRS SHALL BE DIRECTED BY THE ENGINEER. THE WORK WILL BE PAID FOR AS "PRECONSTRUCTION VISUAL RECORDING".

20. STATE OWNED TEMPORARY CONCRETE BARRIER WALL IS LOCATED WITHIN THE PROJECT LIMITS AT THE START OF CONSTRUCTION. THIS BARRIER WALL IS TO REMAIN, HOWEVER THE CONTRACTOR IS RESPONSIBLE FOR MAINTAINING THIS WALL UTILIZING THE PAY ITEMS WITHIN THIS CONTRACT.

21. ALL EXISTING 8" (1.5" BLACK, 4" WHITE, 1.5" BLACK) ON I-80 PREFORMED PLASTIC TYPE B STANDARD LANE LINE PAVEMENT MARKINGS AND RAISED REFLECTIVE PAVEMENT MARKER REFLECTORS LOCATED WITHIN TEMPORARY LANE CLOSURE TAPERS, LANE SHIFT TAPERS OR IN LOCATIONS THAT CONFLICT WITH THE TEMPORARY PAVEMENT MARKING TAPE USED FOR STAGING SHALL BE REMOVED IF THE STAGING WILL REMAIN IN PLACE FOR MORE THAN 14 DAYS. THE EXISTING 7" (1.5" BLACK, 4" WHITE, 1.5" BLACK) PREFORMED PLASTIC TYPE B STANDARD PAVEMENT MARKINGS AND RAISED REFLECTIVE PAVEMENT MARKER REFLECTORS THAT WERE REMOVED SHALL BE RESTORED AFTER THE COMPLETION OF THE STAGING.

22. PAVEMENT MARKING TAPE, TYPE IV SHOWN ON THE PLANS FOR ANY CONSTRUCTION STAGE ON LOCAL ROADS THAT THE CONTRACTOR PROPOSES TO EXTEND OVER THE WINTER PERIOD SHALL BE MODIFIED URETHANE PAVEMENT MARKING AND WILL BE PAID FOR THEIR RESPECTIVE CONTRACT UNIT PRICE. TEMPORARY PAVEMENT MARKINGS ON I-80 AND RAMPS SHALL BE TEMPORARY PAVEMENT MARKING - EPOXY. TEMPORARY PAVEMENT MARKINGS ON ARTERIAL ROADS SHALL BE TEMPORARY PAVEMENT MARKING - TYPE IV TAPE UNLESS USED DURING THE WINTER. IF TEMPORARY PAVEMENT MARKING ALONG ARTERIAL ROADS IS USED DURING THE WINTER, THE TEMPORARY PAVEMENT MARKING SHALL BE TEMPORARY PAVEMENT MARKING - EPOXY. PRIOR TO PLACING TEMPORARY PAVEMENT MARKING ON ARTERIAL ROADS, THE CONTRACTOR SHALL VERIFY THE PAVEMENT MARKING MATERIAL WITH THE ENGINEER.

23. THE "ROAD CONSTRUCTION AHEAD" SIGNS SHALL REMAIN INSTALLED UNTIL THE COMPLETION OF THE PROJECT OR WHEN NO ROADWAY HAZARDS REMAIN WITHIN THE WORK ZONE.

24. THE RESIDENT ENGINEER SHALL CONTACT THE PACE BUS TRANSPORTATION ENGINEER AT TRANSPORTATION.ENGINEER@PACEBUS.COM ONE (1) WEEK IN ADVANCE OF ALL STAGE CHANGES.

25. WHEN MOT SIGNING ALONG CHICAGO STREET, SOUTH OF PATTERSON ROAD, ARE IN CONFLICT WITH EXISTING RETAINING WALLS, THE SIGNS SHALL BE PLACED ON TOP OF THE RETAINING WALL WITH SHORTER POSTS TO THE SATISFACTION OF THE ENGINEER. SHRUBS AND OVERHANGING LIMBS SHALL BE CLEARED AS NECESSARY TO NOT OBSTRUCT THE VIEW OF THE MOT SIGNING. NO ADDITIONAL COMPENSATION WILL BE MADE FOR THIS WORK BUT SHALL BE INCLUDED IN THE COST OF THE APPLICABLE TRAFFIC CONTROL PAY ITEMS.

26. THE DEPTH OF THE TEMPORARY PAVEMENT ALONG CHICAGO STREET MAY BE REDUCED TO MATCH THE DEPTH OF THE EXISTING PAVEMENT WITH THE APPROVAL OF THE ENGINEER. THIS APPLIES TO BOTH HOT-MIX ASPHALT AND PORTLAND CEMENT PAVEMENT OPTIONS. THE MINIMUM TEMPORARY PAVEMENT THICKNESS SHALL BE 8". FOR HOT -MIX ASPHALT PAVEMENT, ANY REDUCTION IN TOTAL PAVEMENT THICKNESS SHALL BE MADE BY REDUCING THE BINDER COURSE ONLY. THE SURFACE COURSE SHALL REMAIN AT THE PROPOSED THICKNESS.

27. TEMPORARY CONCRETE BARRIER SHALL BE CONTINUOUSLY PINNED ALONG THE TRAFFIC SIDE WHERE A HAZARD EXISTS WITHIN 2 FEET BEHIND THE TEMPORARY CONCRETE BARRIER; THE BARRIER SHALL BE ANCHORED TO THE PAVEMENT. PINNING ON THE NEW BRIDGE DECK OR THE EXISTING BRIDGE DECK TO REMAIN SHALL BE AVOIDED. ANY CRC REBAR IN CONFLICT WITH THE BARRIER WALL PINNING WILL NEED TO BE LANCED AT THE EXPENSE OF THE CONTRACTOR.

28. ALL EXISTING LANE LINE PAVEMENT MARKINGS AND RAISED REFLECTIVE PAVEMENT MARKERS REFLECTORS LOCATED WITHIN TEMPORARY LANE CLOSURE TAPERS, LANE SHIFT TAPERS OR IN LOCATIONS THAT CONFLICT WITH THE TEMPORARY PAVEMENT MARKING TAPE USED FOR STAGING SHALL BE REMOVED VIA WATER BLASTING WITH VACUUM RECOVERY IF THE STAGING WILL REMAIN IN PLACE FOR MORE THAN 14 DAYS.

29. LANE CLOSURES, RAMP CLOSURES, SIGNING, PAVEMENT MARKINGS, AND BARRICADE PLACEMENT FOR THE I-80 OVER DES PLAINES RIVER BRIDGES MAINTENANCE PATCHING SHALL BE IN ACCORDANCE WITH THE LATEST HIGHWAY STANDARD DRAWINGS AND IDOT DISTRICT 1 STANDARD DETAILS AS APPLICABLE. THE COST FOR INSTALLATION AND REMOVAL OF DAILY LANE CLOSURES SHALL BE INCLUDED IN THE COST OF "TRAFFIC CONTROL AND PROTECTION (EXPRESSWAYS)".

30. THE CONTRACTOR SHALL USE CAUTION WHILE ANCHORING TEMPORARY CONCRETE BARRIER WALL AND TEMPORARY IMPACT ATTENUATORS ON THE EXISTING BARRIER BASE BETWEEN STATION 723+31 AND 727+80 SINCE THERE IS EXISTING 4" CONDUIT LOCATED WITHIN THE BARRIER BASE.

31. THE PAY ITEM "BARRIER WALL REFLECTORS, TYPE C" IS INTENDED SOLELY TO BE USED FOR REFLECTOR APPLICATIONS ON PERMANENT AND EXISTING CONCRETE BARRIER AND IS NOT TO BE USED FOR TEMPORARY CONRETE BARRIER WHERE THE TYPE C REFLECTOR IS CONSIDERED INCLUDED IN THE COST OF THE TEMPORARY CONCRETE BARRIER PER HIGHWAY STANDARD 704001.

32. ALL LOCAL ROAD WARNING SIGNS SHALL BE PLACED 200' IN ADVANCE OF THE INTERSECTION OR AT THE NEAREST PRACTICAL LOCATION PER TC-10. WHERE WIDTH RESTRICTIONS APPLY, REFER TO THE WIDTH RESTRICTION DETAIL FOR REQUIRED SIGNAGE. IN SUCH CASES, THE "ROAD CONSTRUCTION AHEAD" SIGN SHALL BE PLACED 200' IN ADVANCE OF THE WIDTH RESTRICTION SIGNAGE."

33. THE SUGGESTED MAINTENANCE OF TRAFFIC (MOT) PLANS ARE INTENDED TO SERVE AS A GUILDELINE FOR THE SAFE AND EFFICIENT DIVERSION OF TRAFFIC THROUGHOUT THE EXECUTION OF THIS CONTRACT. THE CONTRACTOR MAY REQUEST ADJUSTMENTS TO THE MOT PLANS TO ACCOMMODATE CONSTRUCTION REQUIREMENTS, PROVIDED THAT SUCH MODIFICATIONS DO NOT COMPROMISE PUBLIC SAFETY OR CONVENIENCE. ANY PROPOSED CHANGES TO THE MOT PLANS MUST BE SUBMITTED TO THE ENGINEER FOR REVIEW AND APPROVAL AT LEAST 30 DAYS BEFORE IMPLEMENTING THE CHANGE.

34. THE CONTRACTOR SHALL BE AWARE THAT THE CONSTRUCTION SEQUENCING SHEET PROVIDES THE MOST CURRENT INFORMATION OF THE PROPOSED TRAFFIC CONTROL AND DESCRIPTION OF WORK TO BE PERFORMED RELATING THE CONTRACTOR COMPLETION DATES FOR EACH STAGE. THE DEPARTMENT MAY DIRECT THE CONTRACTORS TO IMPLEMENT AN ALTERNATE MOT PLAN WHICH WILL BE PROVIDED IN A FUTURE CONSTRUCTION REVISION.

CONSTRUCTION SEQUENCING

STAGE 1

PROPOSED TRAFFIC CONTROL:
EB I-80 ON DES PLAINES RIVER BRIDGES: MAINTAIN EXISTING TRAFFIC AND LANE CONFIGURATION; EB AUX LANE TO EXIT ONLY
WB I-80 ON DES PLAINES RIVER BRIDGES: DROP WB AUX LANE AND CLOSE EXIT RAMP TO CENTER STREET; MAINTAIN TWO WB THRU LANES ON EXIST BRIDGE

EXIT RAMPS CLOSED TO TRAFFIC: EX WB I-80 TO CENTER STREET (SEE DETOUR PLANS)

DESCRIPTION OF WORK TO BE PERFORMED:
NONE

STAGE 2

PROPOSED TRAFFIC CONTROL:

EB & WB I-80 ON DES PLAINES RIVER BRIDGES: MAINTAIN EXISTING TRAFFIC FROM PREVIOUS STAGE

EXIT RAMPS CLOSED TO TRAFFIC: EX WB I-80 TO CENTER STREET (SEE DETOUR PLANS)

DESCRIPTION OF WORK TO BE PERFORMED:

CONSTRUCT PROP WB & EB DES PLAINES RIVER BRIDGE OFFLINE.
CONSTRUCT PORTIONS OF PROP EB DES PLAINES RIVER BRIDGE OFFLINE AS INDICATED ON THE PLANS.
CONSTRUCT COMPENSATORY STORAGE ALONG US-6 AND RECONSTRUCT SB PAVEMENT

CITY UTILITIES WORK SHALL BE COMPLETED IN THIS STAGE.

STAGE 3

PROPOSED TRAFFIC CONTROL:

EB I-80 ON EB DES PLAINES RIVER BRIDGE: MAINTAIN EXISTING TRAFFIC FROM PREVIOUS STAGE

WB I-80 ON WB DES PLAINES RIVER BRIDGE: MAINTAIN 2 LANES OF WB TRAFFIC ON EXIST BRIDGE, WB AUX LANE IS CLOSED
EXIT RAMPS CLOSED TO TRAFFIC: EX WB I-80 TO CENTER STREET (SEE DETOUR PLANS)

ENTRANCE RAMPS CLOSED TO TRAFFIC: EX CHICAGO TO WB I-80 (SEE DETOUR PLANS)

DESCRIPTION OF WORK TO BE PERFORMED:

DES PLAINES RIVER BRIDGE:
CONTINUE TO CONSTRUCT PROP WB DES PLAINES RIVER BRIDGE OFFLINE. WB DES PLAINES RIVER BRIDGE MUST BE COMPLETED IN THIS STAGE.

CONSTRUCT PORTIONS OF PROP EB DES PLAINES RIVER BRIDGE OFFLINE AS INDICATED ON THE PLANS.

CONSTRUCT WB TEMPORARY PAVEMENT TO CONNECT PROPOSED WB DES PLAINES RIVER BRIDGE TO EXISTING WB I-80 PAVEMENT; CONSTRUCT PORTION OF CHICAGO RAMP C CONNECTING PROPOSED WB DES PLAINES RIVER BRIDGE

STAGE 4

PROPOSED TRAFFIC CONTROL:

EB I-80 ON EB DES PLAINES RIVER BRIDGE: MAINTAIN EXISTING TRAFFIC FROM PREVIOUS STAGE

WB I-80 ON WB DES PLAINES RIVER BRIDGE: SHIFT TWO LANES OF WB I-80 TRAFFIC TO THE OUTSIDE LANES OF THE PROP WB DES PLAINES RIVER BRIDGE;

AUX LANE AND WB I-80 EXIT & ENTRANCE RAMPS ARE OPEN TO TRAFFIC

DESCRIPTION OF WORK TO BE PERFORMED:

DES PLAINES RIVER BRIDGE:
CONTINUE CONSTRUCTING PORTIONS OF PROP EB DES PLAINES RIVER BRIDGE OFFLINE

CONSTRUCT EB TEMPORARY PAVEMENT TO CONNECT PROPOSED EB DES PLAINES RIVER BRIDGE TO EXISTING EB I-80 PAVEMENT;

STAGE 5

PROPOSED TRAFFIC CONTROL:

EB I-80 ON EB DES PLAINES RIVER BRIDGE: SHIFT TWO LANES OF EB TRAFFIC TO THE INSIDE LANES OF THE PROP WB DES PLAINES RIVER BRIDGE

WB I-80 ON WB DES PLAINES RIVER BRIDGE: CONTINUE TO MAINTAIN TWO LANES OF WB TRAFFIC ON THE OUTSIDE LANES OF PROP WB DES PLAINES RIVER BRIDGE;

SEPARATE WB TRAFFIC FROM EB TRAFFIC USING TEMPORARY CONCRETE BARRIER WITH GLARE SCREEN;

AUX LANE AND WB I-80 EXIT & ENTRANCE RAMPS ARE OPEN TO TRAFFIC

RAMPS CLOSED TO TRAFFIC: EX CENTER STREET TO I-80 ENTRANCE RAMP (SEE DETOUR PLANS)
EX EB I-80 TO CHICAGO STREET EXIT RAMP (SEE DETOUR PLANS)

DESCRIPTION OF WORK TO BE PERFORMED:

CONTINUE TO CONSTRUCT EB TEMPORARY PAVEMENT TO CONNECT PROPOSED EB DES PLAINES RIVER BRIDGE TO EXISTING EB I-80 PAVEMENT

STAGE 6

PROPOSED TRAFFIC CONTROL:

EB I-80 ON EB DES PLAINES RIVER BRIDGE: SHIFT TWO LANES OF EB TRAFFIC TO THE OUTSIDE LANES OF THE PROP EB DES PLAINES RIVER BRIDGE

AUX LANE AND EB I-80 EXIT & ENTRANCE RAMPS ARE OPEN TO TRAFFIC

WB I-80 ON WB DES PLAINES RIVER BRIDGE: CONTINUE TO MAINTAIN TWO LANES OF WB TRAFFIC ON THE OUTSIDE LANES OF PROP WB DES PLAINES RIVER BRIDGE;

AUX LANE AND WB I-80 EXIT & ENTRANCE RAMPS ARE OPEN TO TRAFFIC

DESCRIPTION OF WORK TO BE PERFORMED:

NONE

LOCAL ROADS CONSTRUCTION SEQUENCE

LOCAL ROADS

ALL CITY UTILITY WORK WITHIN THE LIMITS OF LOCAL ROADS IMPROVEMENTS SHALL BE COMPLETED PRIOR TO ANY PROPOSED LOCAL ROADWAY WORK.

CONSTRUCTION STAGING FOR LOCAL ROADS IS INDEPENDENT FROM I-80 MAINLINE. THE CONTRACTOR IS RESPONSIBLE TO DETERMINE WHEN TO PERFORM ROADWAY WORK ON LOCAL ROADS AND BE APPROVED BY THE ENGINEER. SEE NOTES BELOW FOR SPECIFIC TIME RESTRICTION.

MAINTENANCE OF PEDESTRIANS AT SIDEWALKS SHALL BE IN ACCORDANCE WITH IDOT HIGHWAY STANDARD 701801.

CHERRY STREET:

RESURFACE THE ENTRANCE TO CHERRY STREET OFF US ROUTE 6.
TRAFFIC CONTROL SHALL BE IN ACCORDANCE WITH IDOT HIGHWAY STANDARD 701501 AND TC-23.
CONTRACTOR TO MAINTAIN ACCESS FOR LOCAL TRAFFIC ENTERING THE NEIGHBORHOOD AND TAKE PRECAUTIONS TO NOT OBSTRUCT RAILROAD CROSSING.

JOLIET STREET-SOUTH :

CONSTRUCTION OF CUL-DE-SAC ON JOLIET STREET SOUTH OF THE PROPOSED I-80 BRIDGE.
ROADWAY TO BE CLOSED FOR LOCAL TRAFFIC ONLY.
CONTRACTOR SHALL SCHEDULE WORK TO MINIMIZE CLOSURE OF RESIDENTIAL DRIVEWAYS AND TO COORDINATE WITH PROPERTY OWNERS.

JOLIET STREET-NORTH :

CONSTRUCTION OF CUL-DE-SAC ON JOLIET STREET NORTH OF THE PROPOSED I-80 BRIDGE.
ROADWAY TO BE CLOSED FOR LOCAL TRAFFIC ONLY.
CONTRACTOR SHALL SCHEDULE WORK TO MINIMIZE CLOSURE OF RESIDENTIAL DRIVEWAYS AND TO COORDINATE WITH PROPERTY OWNERS.

LUCAS STREET :

NEW CONSTRUCTION ON LUCAS STREET WILL EXTEND THE ROADWAY TO CONNECT WITH WATER STREET.
ROADWAY TO BE CLOSED FOR LOCAL TRAFFIC ONLY.
CONTRACTOR SHALL SCHEDULE WORK TO MINIMIZE CLOSURE OF RESIDENTIAL DRIVEWAYS AND TO COORDINATE WITH PROPERTY OWNERS.

WATER STREET :

RESURFACING ALONG WATER STREET FROM DES PLAINS STREET TO LUCAS STREET.
TRAFFIC CONTROL SHALL BE IN ACCORDANCE WITH IDOT HIGHWAY STANDARD 701501.

RIVER STREET :

NEW CONSTRUCTION ON RIVER STREET WILL EXTEND THE ROAD TO CONNECT WITH LUCAS STREET FROM 104+25.31 TO 112+17.00.
RESURFACING ALONG RIVER STREET FROM DAVIS STREET 100+50.00 TO PROPOSED CONSTRUCTION LIMIT AT 104+25.31.

TRAFFIC CONTROL FOR RESURFACING WORK SHALL BE IN ACCORDANCE WITH IDOT HIGHWAY STANDARD 701501.
BOTH LUCAS STREET AND RIVER STREET TO BE CLOSED FOR LOCAL TRAFFIC ONLY.
SEE DETOUR PLAN FOR MORE INFORMATION.
CONTRACTOR SHALL SCHEDULE WORK TO MINIMIZE CLOSURE OF RESIDENTIAL DRIVEWAYS AND TO COORDINATE WITH PROPERTY OWNERS.

US-6 :

PIER CONSTRUCTION: CONSTRUCTION OF PIERS 1 OF I-80 OVER DES PLAINES RIVER BRIDGE ALONG SB US-6 DURING STAGE 2 OF 62R22 AND 62R23, BUT NOT AT THE SAME TIME AS COMPENSATORY STORAGE CONSTRUCTION ALONG US-6.

LANE REDUCTION, MAINTAIN ONE LANE IN EACH BOUND ON EXISTING NB US-6.
MAINTAIN ACCESS TO CHERRY STREET DURING PIER CONSTRUCTION.

COMP STORAGE : COMPENSATORY STORAGE SHALL BE CONSTRUCTED DURING STAGE 2 OF 62R22 AND 62R23, BUT NOT AT THE SAME TIME AS THE PROPOSED DES PLAINES RIVER BRIDGE PIER 1 CONSTRUCTION.

CONSTRUCT COMPENSATORY STORAGE ALONG SB US-6 AND RECONSTRUCT SB PAVEMENT.
LANE REDUCTION, MAINTAIN ONE LANE IN EACH BOUND ON EXISTING NB US-6.

RESURFACING US-6: RESURFACING STAGES SHALL BEGIN AFTER PIER WORKS IS COMPLETED.
TRAFFIC CONTROL FOR RESURFACING WORK SHALL BE IN ACCORDANCE WITH IDOT HIGHWAY STANDARD 701606-10.

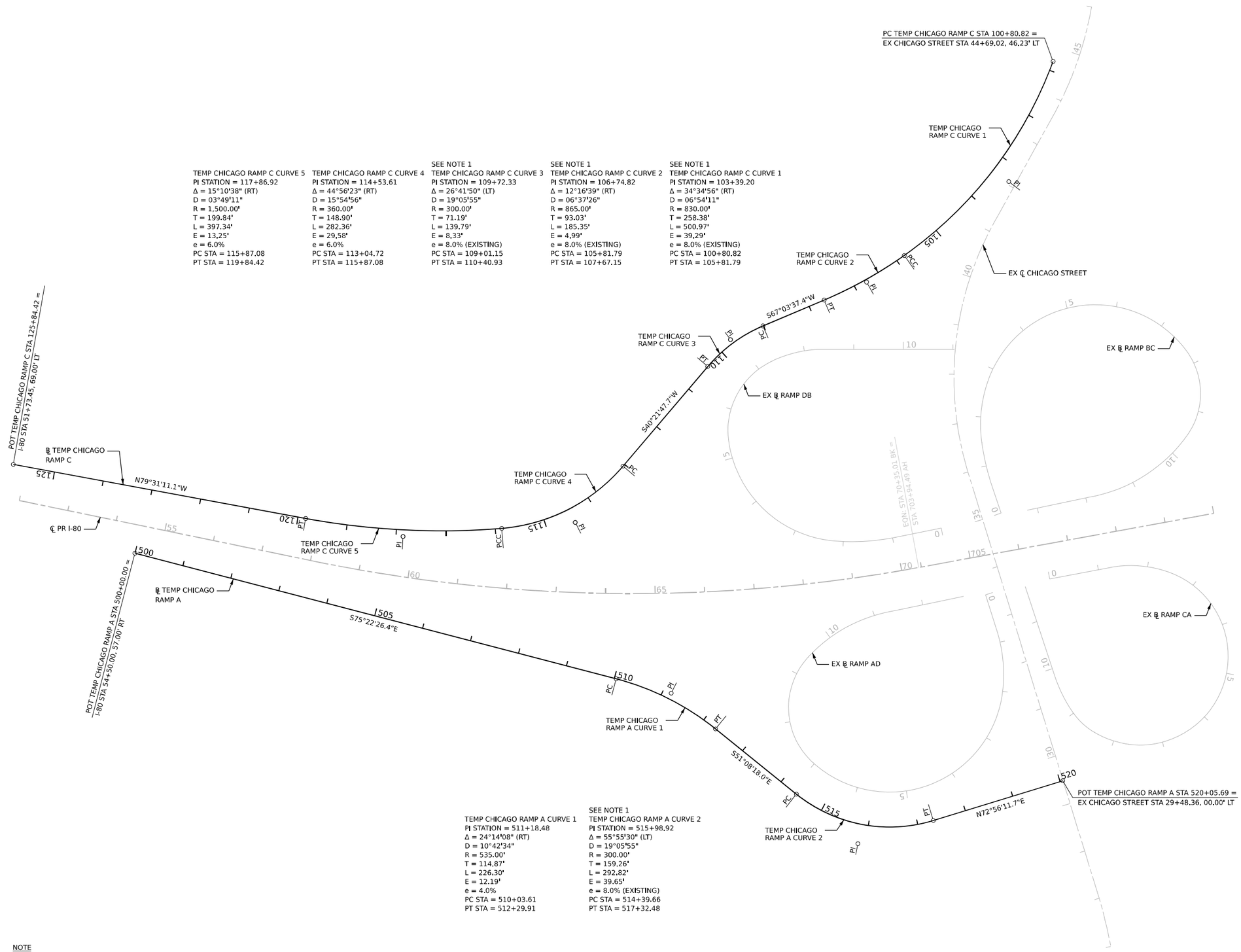

TEMP CHICAGO RAMP C CURVE 5
PI STATION = 117+86.92
Δ = 15°10'38" (RT)
D = 03°49'11"
R = 1,500.00'
T = 199.84'
L = 397.34'
E = 13.25'
e = 6.0%
PC STA = 115+87.08
PT STA = 119+84.42

TEMP CHICAGO RAMP C CURVE 4
PI STATION = 114+53.61
Δ = 44°56'23" (RT)
D = 15°54'56"
R = 360.00'
T = 148.90'
L = 282.36'
E = 29.58'
e = 6.0%
PC STA = 113+04.72
PT STA = 115+87.08

SEE NOTE 1
TEMP CHICAGO RAMP C CURVE 3
PI STATION = 109+72.33
Δ = 26°41'50" (LT)
D = 19°05'55"
R = 300.00'
T = 71.19'
L = 139.79'
E = 8.33'
e = 8.0% (EXISTING)
PC STA = 109+01.15
PT STA = 110+40.93

SEE NOTE 1
TEMP CHICAGO RAMP C CURVE 2
PI STATION = 106+74.82
Δ = 12°16'39" (RT)
D = 06°37'26"
R = 865.00'
T = 93.03'
L = 185.35'
E = 4.99'
e = 8.0% (EXISTING)
PC STA = 105+81.79
PT STA = 107+67.15

SEE NOTE 1
TEMP CHICAGO RAMP C CURVE 1
PI STATION = 103+39.20
Δ = 34°34'56" (RT)
D = 06°54'11"
R = 830.00'
T = 258.38'
L = 500.97'
E = 39.29'
e = 8.0% (EXISTING)
PC STA = 100+80.82
PT STA = 105+81.79

TEMP CHICAGO RAMP A CURVE 1
PI STATION = 511+18.48
Δ = 24°14'08" (RT)
D = 10°42'34"
R = 535.00'
T = 114.87'
L = 226.30'
E = 12.19'
e = 4.0%
PC STA = 510+03.61
PT STA = 512+29.91

SEE NOTE 1
TEMP CHICAGO RAMP A CURVE 2
PI STATION = 515+98.92
Δ = 55°55'30" (LT)
D = 19°05'55"
R = 300.00'
T = 159.26'
L = 292.82'
E = 39.65'
e = 8.0% (EXISTING)
PC STA = 514+39.66
PT STA = 517+32.48

NOTE
1. CURVE DATA MATCHES EXISTING CURVE DATA

ALIGNMENT COORDINATES
TEMP CHICAGO RAMP C

	STATION	N	E
POT / PC	100+80.82	1,765,775.36	1,053,201.88
PI	103+39.20	1,765,532.87	1,053,112.66
PCC	105+81.79	1,765,383.87	1,052,901.58
PI	106+74.82	1,765,330.22	1,052,825.57
PT	107+67.15	1,765,293.96	1,052,739.90
PC	109+01.15	1,765,241.74	1,052,616.49
PI	109+72.33	1,765,213.99	1,052,550.93
PT	110+40.93	1,765,159.75	1,052,504.83
PC	113+04.72	1,764,958.76	1,052,334.00
PI	114+53.61	1,764,845.31	1,052,237.57
PCC	115+87.08	1,764,833.11	1,052,089.17
PI	117+86.92	1,764,816.75	1,051,890.00
PT	119+84.42	1,764,853.10	1,051,693.50
POT	125+84.42	1,764,962.24	1,051,103.51

ALIGNMENT COORDINATES
TEMP CHICAGO RAMP A

	STATION	N	E
POT	500+00.00	1,764,783.09	1,051,348.99
PC	510+03.61	1,764,529.67	1,052,320.08
PI	511+18.48	1,764,500.67	1,052,431.23
PT	512+29.91	1,764,428.59	1,052,520.67
PC	514+39.66	1,764,296.99	1,052,683.99
PI	515+98.92	1,764,197.06	1,052,808.00
PT	517+32.48	1,764,243.79	1,052,960.25
POT	520+05.69	1,764,323.96	1,053,221.44

MODEL: Default
FILE NAME: pw://transystems-pw.bentley.com:transyscorp-pw1-hosted/Documents/Projects_2018/CH401/401180022/03-WSP/CAD/62R23-RB-1/Sheets/Civil/0162R23-sht-FAST-ATB-temp-01

BURNS McDONNELL

USER NAME = USGP718052	DESIGNED - JAP	REVISED -	
	DRAWN - TMM	REVISED -	
PLOT SCALE = 200.000 ' / in.	CHECKED - JIR	REVISED -	
PLOT DATE = 11/6/2025	DATE - 11/7/2025	REVISED -	

STATE OF ILLINOIS
DEPARTMENT OF TRANSPORTATION

TEMPORARY RAMP ALIGNMENT
TEMPORARY CHICAGO RAMP A AND C

SCALE: 1" = 100' | SHEET 1 OF 1 SHEETS | STA. TO STA.

F.A.I. RTE.	SECTION	COUNTY	TOTAL SHEETS	SHEET NO.
80	FAI 80 21 STRUCTURE 2	WILL	1230	165
		CONTRACT NO. 62R23		
		ILLINOIS	FED. AID PROJECT	

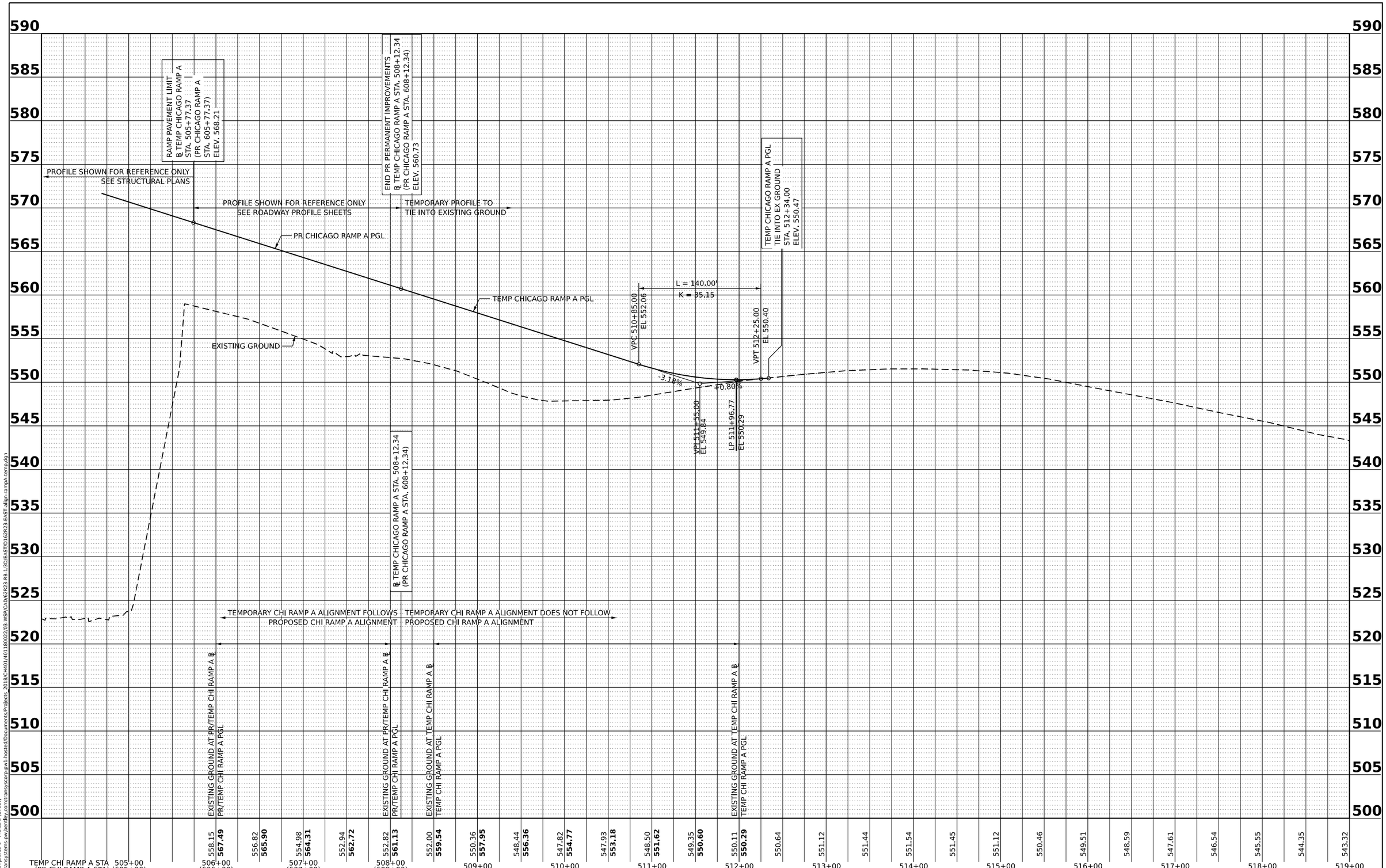

MODEL: east-rampA-profile-1 - Profile 2 [Sheet]
FILE NAME: pw://transystems-pw.bentley.com:transyscorp-pw1-hosted/Documents/Projects_2018/CH401/401180022/03-WSP/CAD/62R23-RB-1/3D/EAST/0162R23-EAST-align-rampA-temp.dgn

BURNS McDONNELL

USER NAME = USGP718052	DESIGNED - JAP	REVISED -	
	DRAWN - TMM	REVISED -	
PLOT SCALE = 0.16666667 ' / in.	CHECKED - JJR	REVISED -	
PLOT DATE = 11/6/2025	DATE - 11/7/2025	REVISED -	

STATE OF ILLINOIS
DEPARTMENT OF TRANSPORTATION

TEMPORARY ROADWAY PROFILE
CHICAGO STREET RAMP A

SCALE: 50H:5V | SHEET 1 OF 1 SHEETS | STA. | TO STA.

F.A.I. RTE.	SECTION	COUNTY	TOTAL SHEETS	SHEET NO.
80	FAI 80 21 STRUCTURE 2	WILL	1230	166
		CONTRACT NO. 62R23		
		ILLINOIS	FED. AID PROJECT	

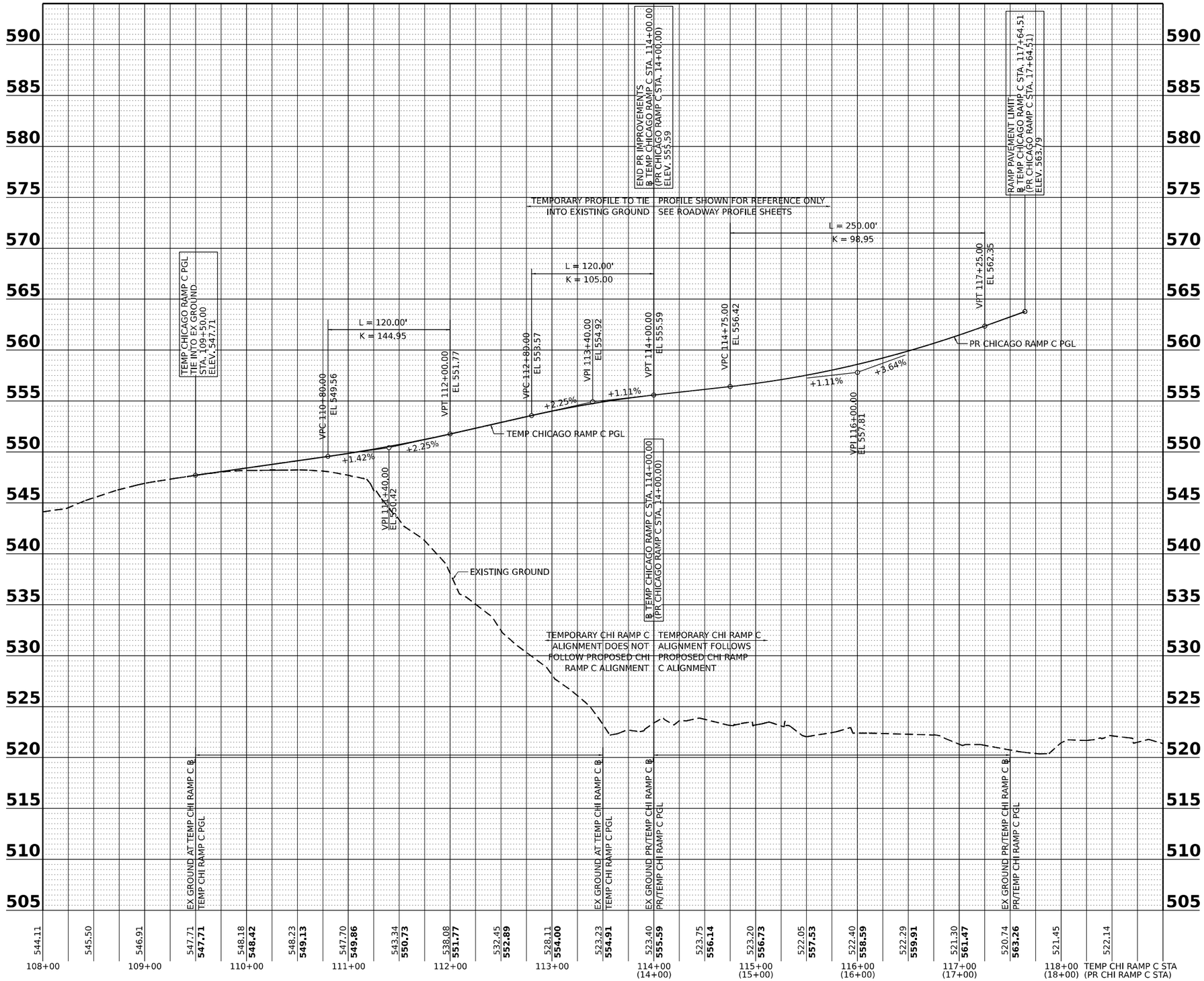

MODEL: temp-rampC-alt - Profile 1 [Sheet]
FILE NAME: pw://transystems-pw.bentley.com:transyscorp-pw1-hosted/Documents/Projects_2018/CH401/401180022/03-WSP/CAD/62R23-RB-130/EAST/D162R23-EAST-align-rampC-temp.dgn

BURNS McDONNELL

USER NAME = USGP718052	DESIGNED - JAP	REVISED -	
	DRAWN - TMM	REVISED -	
PLOT SCALE = 0.16666667 ' / in.	CHECKED - JIR	REVISED -	
PLOT DATE = 11/6/2025	DATE - 11/7/2025	REVISED -	

STATE OF ILLINOIS
DEPARTMENT OF TRANSPORTATION

TEMPORARY ROADWAY PROFILE
CHICAGO STREET RAMP C

SCALE: 50H:5V | SHEET 1 OF 1 SHEETS | STA. TO STA.

F.A.I. RTE.	SECTION	COUNTY	TOTAL SHEETS	SHEET NO.
80	FAI 80 21 STRUCTURE 2	WILL	1230	167

CONTRACT NO. 62R23

ILLINOIS | FED. AID PROJECT

STAGE 2 - CHICAGO STREET WIDTH RESTRICTION ADVANCED SIGNING DETAIL

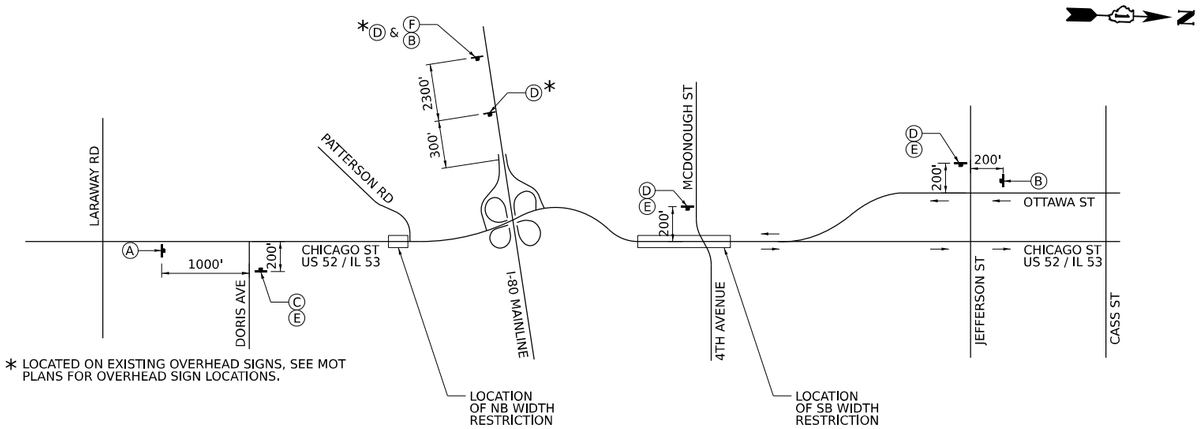

* LOCATED ON EXISTING OVERHEAD SIGNS, SEE MOT PLANS FOR OVERHEAD SIGN LOCATIONS.

STAGE 2 - WIDTH RESTRICTION ADVANCED SIGNING ASSEMBLIES

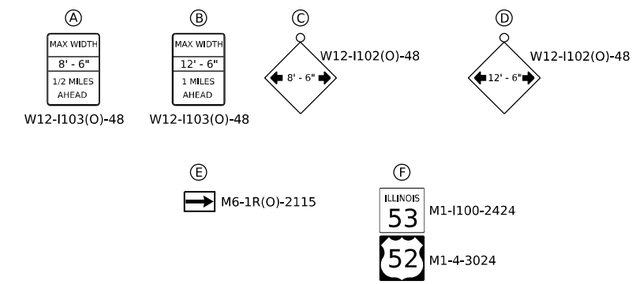

MODEL: Default
FILE NAME: pw://transystems-pw.bentley.com:transyscorp-pw1-hosted/Documents/Projects_2018/CH401/401180022/03-WSP/CAD/62R23-IB-1/Sheets/Civil/0162R23-sht-FAST-MOT-det-widthrestrict

BURNS McDONNELL	USER NAME = USGP718052	DESIGNED - JAP	REVISED -	STATE OF ILLINOIS DEPARTMENT OF TRANSPORTATION	SUGGESTED STAGES OF CONSTRUCTION AND TRAFFIC CONTROL WIDTH RESTRICTION ADVANCED SIGNING DETAIL	F.A.I. RTE.	SECTION	COUNTY	TOTAL SHEETS	SHEET NO.
		DRAWN - TMM	REVISED -			80	FAI 80 21 STRUCTURE 2	WILL	1230	168
	PLOT SCALE = 100.000 ' / in.	CHECKED - JIR	REVISED -					CONTRACT NO. 62R23		
	PLOT DATE = 11/6/2025	DATE - 11/7/2025	REVISED -		SCALE: NTS SHEET 1 OF 1 SHEETS STA. TO STA.		ILLINOIS	FED. AID PROJECT		

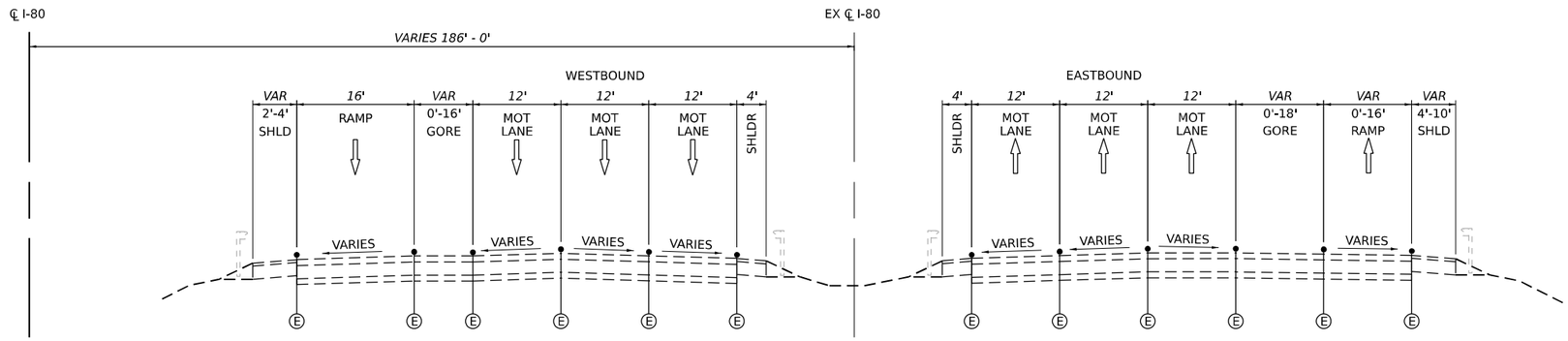

MOT TYPICAL SECTION STAGE 2

I-80 MAINLINE
STA. 60+00 TO STA. 705+00
N.T.S.

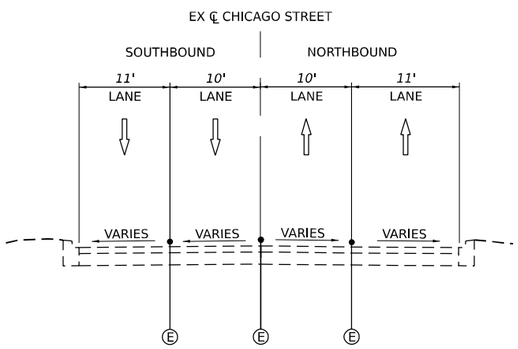

MOT TYPICAL SECTION STAGE 2

CHICAGO STREET
STA. 10+00 TO STA. 17+35
N.T.S.

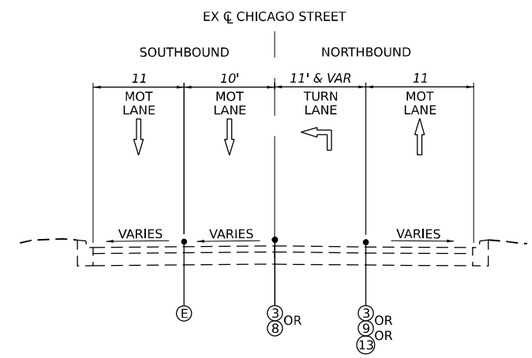

MOT TYPICAL SECTION STAGE 2

CHICAGO STREET
STA. 17+35 TO STA 29+00
N.T.S.

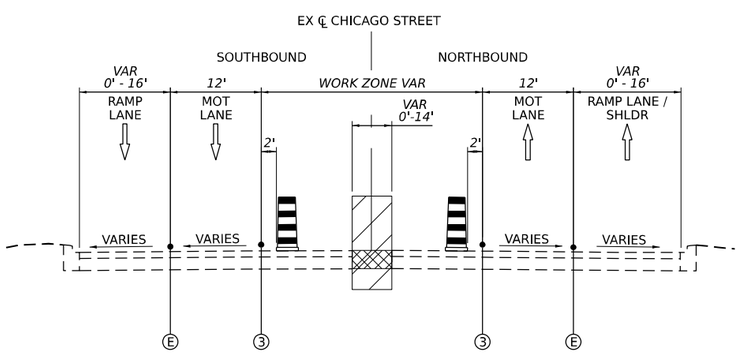

MOT TYPICAL SECTION STAGE 2

CHICAGO STREET
STA. 29+00 TO STA 47+00
N.T.S.

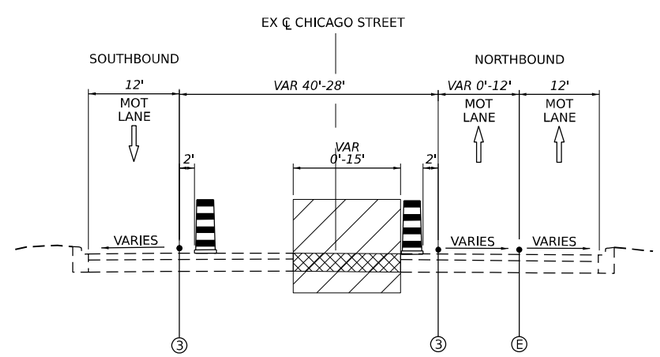

MOT TYPICAL SECTION STAGE 2

CHICAGO STREET
STA. 47+00 TO STA 57+00
N.T.S.

LEGEND

- (E) EXISTING PAVEMENT MARKING
- (P) PERMANENT PAVEMENT MARKING
- (R) PAVEMENT MARKING REMOVAL
- (1) TEMP PVT MK - LINE 4": 9' SKIP, 3' DASH WHITE
- (2) TEMP PVT MK - LINE 4": SOLID WHITE
- (3) TEMP PVT MK - LINE 4": SOLID YELLOW
- (4) TEMP PVT MK - LINE 5": 30' SKIP, 10' DASH WHITE
- (5) TEMP PVT MK - LINE 8": SOLID WHITE
- (6) TEMP PVT MK - LINE 12": SOLID WHITE, CHEVRONS AT 30'
- (7) TEMP PVT MK - LINE 4": 30' SKIP, 10' DASH WHITE
- (8) TEMP PVT MK - LINE 4": SOLID DOUBLE YELLOW 11" C-C
- (9) TEMP PVT MK - LINE 6": SOLID WHITE
- (10) TEMP PVT MK - LINE 24": SOLID WHITE
- (11) TEMP PVT MK - LINE 24": WHITE LETTERS AND SYMBOLS
- (12) TEMP PVT MK - LINE 12": SOLID YELLOW
- (13) TEMP PVT MK - LINE 4": 6' SKIP, 2' DASH WHITE

TEMPORARY PAVEMENT MARKING TYPES:
I-80 AND RAMPS - EPOXY
CHICAGO STREET - WINTER - EPOXY
CHICAGO STREET - NON-WINTER - TYPE IV TAPE

WORK ZONE

TEMPORARY PAVEMENT (ACTIVELY CONSTRUCTING)

TEMPORARY PAVEMENT (PREVIOUSLY CONSTRUCTED)

TEMPORARY TYPE II BARRICADE OR DRUM
I-80 AND RAMPS: 100' C-C TANGENTS, 50' ON TAPERS
25' ON RAMPS
CHICAGO STREET: 50' C-C TANGENTS, 25' ON TAPERS
DEVICE LIGHTS SHOULD BE INSTALLED PER STANDARD SPECIAL PROVISION SECTION 701.16

TEMPORARY CONCRETE BARRIER WITH TYPE C REFLECTORS PER STANDARDS 704001 AND 782006 AND PINNING AS DETAILED IN THE MOT NOTES, SCHEDULE OR PLAN

TEMPORARY CONCRETE BARRIER WITH GLARE SCREEN

EXISTING GUARDRAIL

NOTES:
1. TRAFFIC CONTROL PLANS SHOW HMA TEMPORARY PAVEMENT OPTION AS VISUAL ONLY. SEE ROADWAY TYPICAL SECTIONS FOR TEMPORARY PAVEMENT STRUCTURE OPTIONS.

MODEL: Default
FILE NAME: pw://transystems-pw.bentley.com:transyscorp-pw1-hosted/Documents/Projects_2018/CH401/401180022/03-WSP/CAD/62R23-RB-1/Sheets/CivIll/D162R23-sht-EAST-MOT-typical-01

BURNS McDONNELL

USER NAME = USGP718052	DESIGNED - JAP	REVISED -	
	DRAWN - TMM	REVISED -	
PLOT SCALE = 100.000 ' / in.	CHECKED - JIR	REVISED -	
PLOT DATE = 11/6/2025	DATE - 11/7/2025	REVISED -	

STATE OF ILLINOIS
DEPARTMENT OF TRANSPORTATION

SUGGESTED STAGES OF CONSTRUCTION AND TRAFFIC CONTROL
TYPICAL SECTIONS

SCALE: NTS | SHEET 8 OF 18 SHEETS | STA. | TO STA.

F.A.I. RTE.	SECTION	COUNTY	TOTAL SHEETS	SHEET NO.
80	FAI 80 21 STRUCTURE 2	WILL	1230	169
		CONTRACT NO. 62R23		
		ILLINOIS	FED. AID PROJECT	

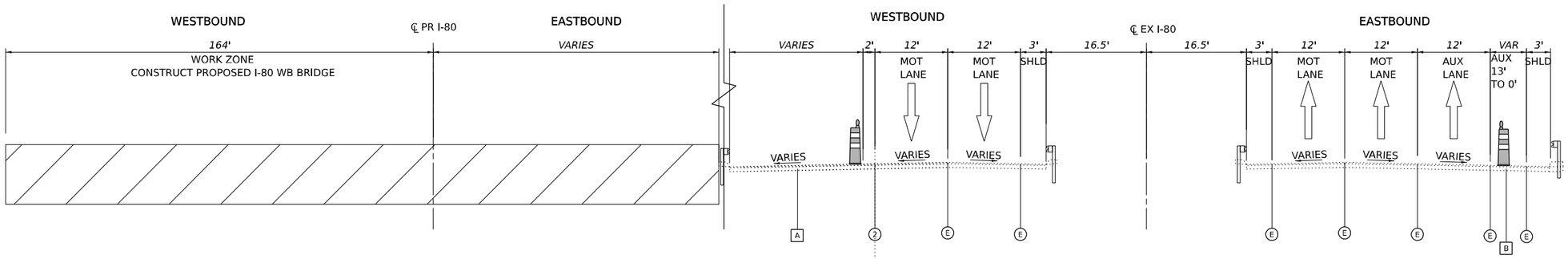

I-80 PR DES PLAINES RIVER BRIDGE MOT TYPICAL SECTION (STAGE 3)

PR STA TO 37+89.00 TO 60+04.87

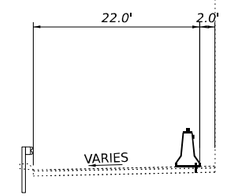

STA 693+01.56 TO 694+94.06

I-80 EX DES PLAINES RIVER BRIDGE MOT TYPICAL SECTION (STAGE 3)

EX STA TO 671+75.84 TO 694+94.06

A STA 671+75.84 TO 693+01.56

B STA 671+75.84 TO 674+91.36

LEGEND

- (E) EXISTING PAVEMENT MARKING
- (P) PERMANENT PAVEMENT MARKING
- (R) PAVEMENT MARKING REMOVAL
- (1) TEMP PVT MK - LINE 8" - EPOXY: 9' SKIP, 3' DASH WHITE
- (2) TEMP PVT MK - LINE 4" - EPOXY: SOLID WHITE
- (3) TEMP PVT MK - LINE 4" - EPOXY: SOLID YELLOW
- (4) TEMP PVT MK - LINE 5" - EPOXY: 30' SKIP, 10' DASH WHITE
- (5) TEMP PVT MK - LINE 8" - EPOXY: SOLID WHITE
- (6) TEMP PVT MK - LINE 12" - EPOXY: SOLID WHITE
- (7) TEMP PVT MK - LINE 6" - EPOXY: SOLID WHITE
- (8) TEMP PVT MK - LINE 4" - EPOXY: SOLID DOUBLE YELLOW
- (9) TEMP PVT MK - LINE 4" - EPOXY: 30' SKIP, 10' DASH WHITE
- (10) TEMP PVT MK - LINE 24" - EPOXY: SOLID WHITE
- (11) TEMP PVT MK - LINE 12" - EPOXY: YELLOW 45° DIAGONALS @ 75' SPACING INTERVALS
- (12) TEMP PVT MK - LINE 4" - EPOXY: WHITE 45° DIAGONALS

WORK ZONE

TEMPORARY PAVEMENT (ACTIVELY CONSTRUCTING)

TEMPORARY PAVEMENT (PREVIOUSLY CONSTRUCTED)

TYPE II BARRICADE OR DRUM @ 100 FT C-C ALONG ROADWAY (TANGENT), 50 FT C-C ALONG TAPERS AND RAMPS

TEMPORARY CONCRETE BARRIER WITH TYPE C REFLECTORS AND ANCHOR PER STANDARDS 704001 AND 782006

TEMPORARY CONCRETE BARRIER WITH GLARE SCREEN

EXISTING GUARDRAIL

* FROM PREVIOUS STAGE

NOTES:

1. TRAFFIC CONTROL PLANS SHOW HMA TEMPORARY PAVEMENT OPTION AS VISUAL ONLY. SEE ROADWAY TYPICAL SECTIONS FOR TEMPORARY PAVEMENT STRUCTURE OPTIONS.

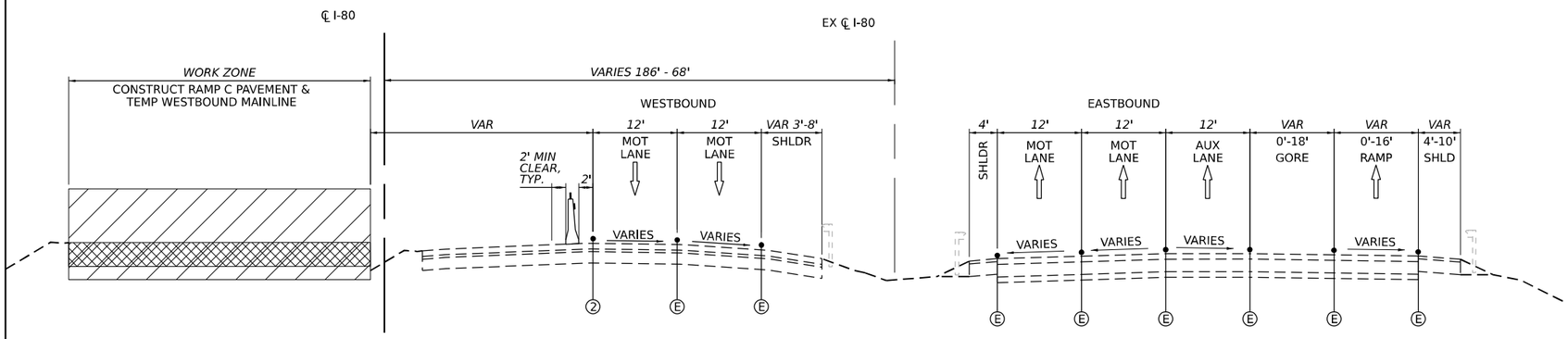

MOT TYPICAL SECTION STAGE 3

I-80 MAINLINE
STA. 60+00 TO STA. 63+70
N.T.S.

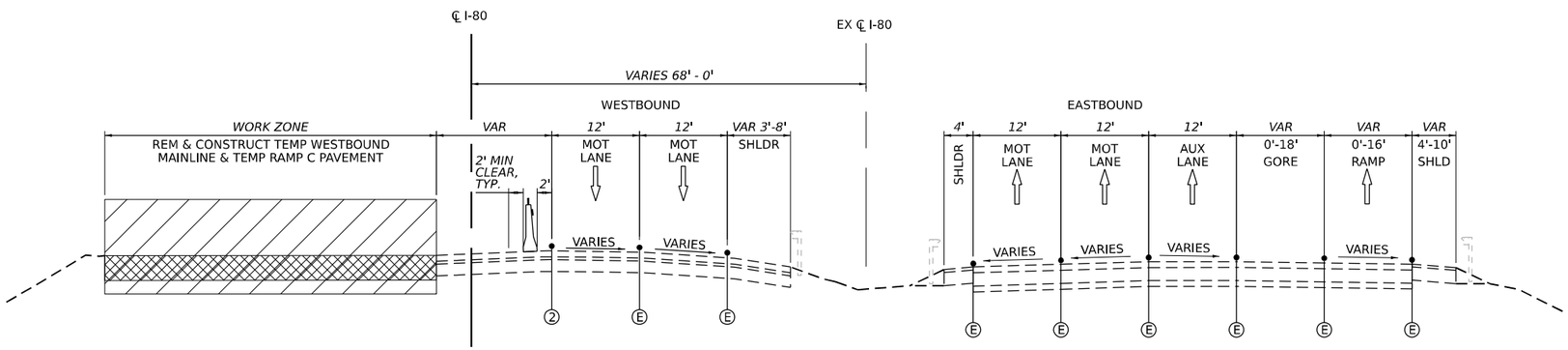

MOT TYPICAL SECTION STAGE 3

I-80 MAINLINE
STA. 63+70 TO STA. 704+70
N.T.S.

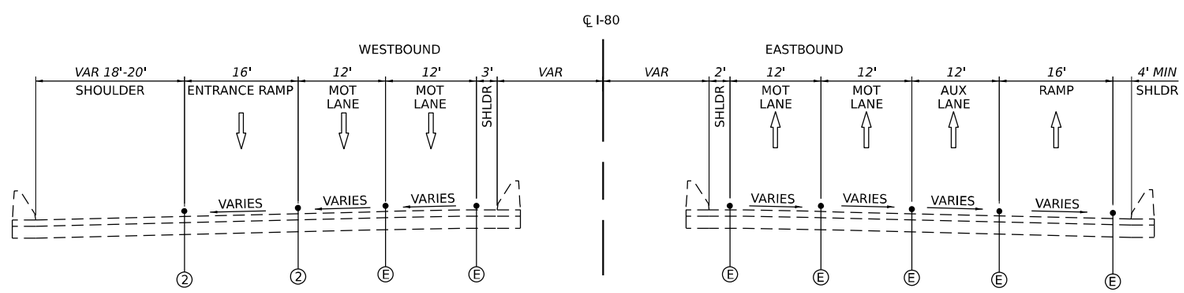

MOT TYPICAL SECTION STAGE 3

I-80 MAINLINE
STA. 704+70 TO STA. 706+40
N.T.S.

LEGEND

- (E) EXISTING PAVEMENT MARKING
- (P) PERMANENT PAVEMENT MARKING
- (R) PAVEMENT MARKING REMOVAL
- (1) TEMP PVT MK - LINE 4": 9' SKIP, 3' DASH WHITE
- (2) TEMP PVT MK - LINE 4": SOLID WHITE
- (3) TEMP PVT MK - LINE 4": SOLID YELLOW
- (4) TEMP PVT MK - LINE 5": 30' SKIP, 10' DASH WHITE
- (5) TEMP PVT MK - LINE 8": SOLID WHITE
- (6) TEMP PVT MK - LINE 12": SOLID WHITE, CHEVRONS AT 30'
- (7) TEMP PVT MK - LINE 4": 30' SKIP, 10' DASH WHITE
- (8) TEMP PVT MK - LINE 4": SOLID DOUBLE YELLOW 11" C-C
- (9) TEMP PVT MK - LINE 6": SOLID WHITE
- (10) TEMP PVT MK - LINE 24": SOLID WHITE
- (11) TEMP PVT MK - LINE 24": WHITE LETTERS AND SYMBOLS
- (12) TEMP PVT MK - LINE 12": SOLID YELLOW
- (13) TEMP PVT MK - LINE 4": 6' SKIP, 2' DASH WHITE

TEMPORARY PAVEMENT MARKING TYPES:
I-80 AND RAMPS - EPOXY
CHICAGO STREET - WINTER - EPOXY
CHICAGO STREET - NON-WINTER - TYPE IV TAPE

WORK ZONE

TEMPORARY PAVEMENT (ACTIVELY CONSTRUCTING)

TEMPORARY PAVEMENT (PREVIOUSLY CONSTRUCTED)

TEMPORARY TYPE II BARRICADE OR DRUM
I-80 AND RAMPS: 100' C-C TANGENTS, 50' ON TAPERS
25' ON RAMPS
CHICAGO STREET: 50' C-C TANGENTS, 25' ON TAPERS
DEVICE LIGHTS SHOULD BE INSTALLED PER STANDARD SPECIAL PROVISION SECTION 701.16

TEMPORARY CONCRETE BARRIER WITH TYPE C REFLECTORS PER STANDARDS 704001 AND 782006 AND PINNING AS DETAILED IN THE MOT NOTES, SCHEDULE OR PLAN

TEMPORARY CONCRETE BARRIER WITH GLARE SCREEN

EXISTING GUARDRAIL

NOTES:
1. TRAFFIC CONTROL PLANS SHOW HMA TEMPORARY PAVEMENT OPTION AS VISUAL ONLY. SEE ROADWAY TYPICAL SECTIONS FOR TEMPORARY PAVEMENT STRUCTURE OPTIONS.

MODEL: Default
FILE NAME: pw://transystems-pw.bentley.com:transyscorp-pw1-hosted/Documents/Projects_2018/CH401/401180022/03-WSP/CAD/62R23-rB-1/Sheets/CwlID162R23-ih-EAST-MOT-typical-02

BURNS McDONNELL

USER NAME = USGP718052	DESIGNED - JAP	REVISED -	
	DRAWN - TMM	REVISED -	
PLOT SCALE = 100.000 ' / in.	CHECKED - JIR	REVISED -	
PLOT DATE = 11/6/2025	DATE - 11/7/2025	REVISED -	

STATE OF ILLINOIS
DEPARTMENT OF TRANSPORTATION

SUGGESTED STAGES OF CONSTRUCTION AND TRAFFIC CONTROL
TYPICAL SECTIONS

SCALE: NTS | SHEET 9 OF 18 SHEETS | STA. TO STA.

F.A.I. RTE.	SECTION	COUNTY	TOTAL SHEETS	SHEET NO.
80	FAI 80 21 STRUCTURE 2	WILL	1230	171
		CONTRACT NO. 62R23		
		ILLINOIS	FED. AID PROJECT	

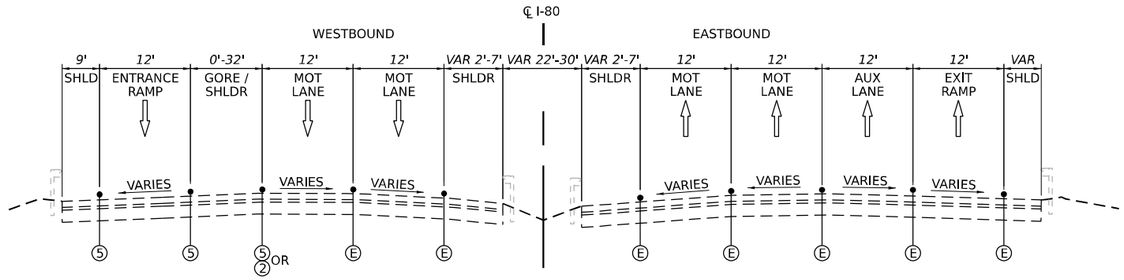

MOT TYPICAL SECTION STAGE 3

I-80 MAINLINE
STA. 706+40 TO STA. 711+00
N.T.S.

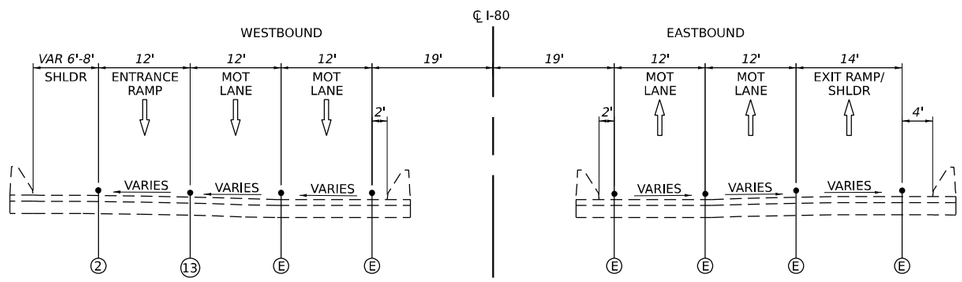

MOT TYPICAL SECTION STAGE 3

I-80 MAINLINE
STA. 711+00 TO STA. 715+60
N.T.S.

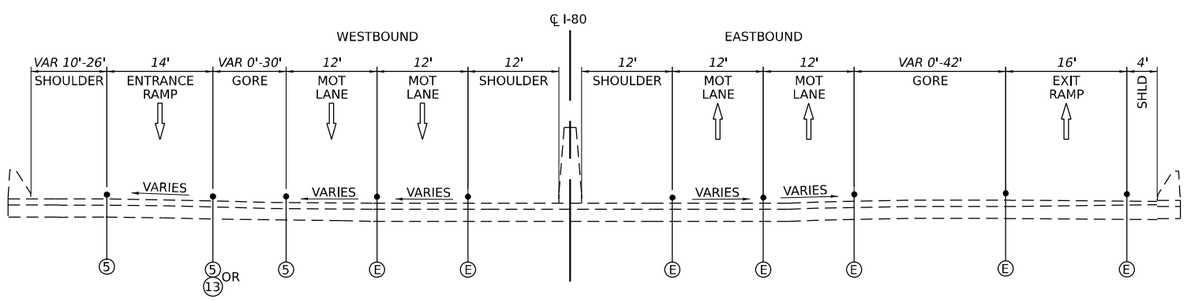

MOT TYPICAL SECTION STAGE 3 / 3 - SUBSTAGE

I-80 MAINLINE
STA. 715+60 TO STA. 725+00
N.T.S.

LEGEND

- (E) EXISTING PAVEMENT MARKING
- (P) PERMANENT PAVEMENT MARKING
- (R) PAVEMENT MARKING REMOVAL
- (1) TEMP PVT MK - LINE 4": 9' SKIP, 3' DASH WHITE
- (2) TEMP PVT MK - LINE 4": SOLID WHITE
- (3) TEMP PVT MK - LINE 4": SOLID YELLOW
- (4) TEMP PVT MK - LINE 5": 30' SKIP, 10' DASH WHITE
- (5) TEMP PVT MK - LINE 8": SOLID WHITE
- (6) TEMP PVT MK - LINE 12": SOLID WHITE, CHEVRONS AT 30'
- (7) TEMP PVT MK - LINE 4": 30' SKIP, 10' DASH WHITE
- (8) TEMP PVT MK - LINE 4": SOLID DOUBLE YELLOW 11" C-C
- (9) TEMP PVT MK - LINE 6": SOLID WHITE
- (10) TEMP PVT MK - LINE 24": SOLID WHITE
- (11) TEMP PVT MK - LINE 24": WHITE LETTERS AND SYMBOLS
- (12) TEMP PVT MK - LINE 12": SOLID YELLOW
- (13) TEMP PVT MK - LINE 4": 6' SKIP, 2' DASH WHITE

TEMPORARY PAVEMENT MARKING TYPES:
I-80 AND RAMPS - EPOXY
CHICAGO STREET - WINTER - EPOXY
CHICAGO STREET - NON-WINTER - TYPE IV TAPE

WORK ZONE

TEMPORARY PAVEMENT (ACTIVELY CONSTRUCTING)

TEMPORARY PAVEMENT (PREVIOUSLY CONSTRUCTED)

TEMPORARY TYPE II BARRICADE OR DRUM
I-80 AND RAMPS: 100' C-C TANGENTS, 50' ON TAPERS
25' ON RAMPS
CHICAGO STREET: 50' C-C TANGENTS, 25' ON TAPERS
DEVICE LIGHTS SHOULD BE INSTALLED PER STANDARD SPECIAL PROVISION SECTION 701.16

TEMPORARY CONCRETE BARRIER WITH TYPE C REFLECTORS PER STANDARDS 704001 AND 782006 AND PINNING AS DETAILED IN THE MOT NOTES, SCHEDULE OR PLAN

TEMPORARY CONCRETE BARRIER WITH GLARE SCREEN

EXISTING GUARDRAIL

NOTES:
1. TRAFFIC CONTROL PLANS SHOW HMA TEMPORARY PAVEMENT OPTION AS VISUAL ONLY. SEE ROADWAY TYPICAL SECTIONS FOR TEMPORARY PAVEMENT STRUCTURE OPTIONS.

MODEL: Default
FILE NAME: pw://transystems-pw.bentley.com:transyscorp-pw1-hosted/Documents/Projects_2018/CH401/401180022/03-WSP/CAD/62R23-RB-1/Sheets/CivilD162R23-ih-EAST-MOT-typical-03

BURNS McDONNELL

USER NAME = USGP718052	DESIGNED - JAP	REVISED -	
	DRAWN - TMM	REVISED -	
PLOT SCALE = 100.000 ' / in.	CHECKED - JIR	REVISED -	
PLOT DATE = 11/6/2025	DATE - 11/7/2025	REVISED -	

STATE OF ILLINOIS
DEPARTMENT OF TRANSPORTATION

SUGGESTED STAGES OF CONSTRUCTION AND TRAFFIC CONTROL
TYPICAL SECTIONS

SCALE: NTS | SHEET 10 OF 18 SHEETS | STA. | TO STA.

F.A.I. RTE.	SECTION	COUNTY	TOTAL SHEETS	SHEET NO.
80	FAI 80 21 STRUCTURE 2	WILL	1230	172
		CONTRACT NO. 62R23		
	ILLINOIS	FED. AID PROJECT		

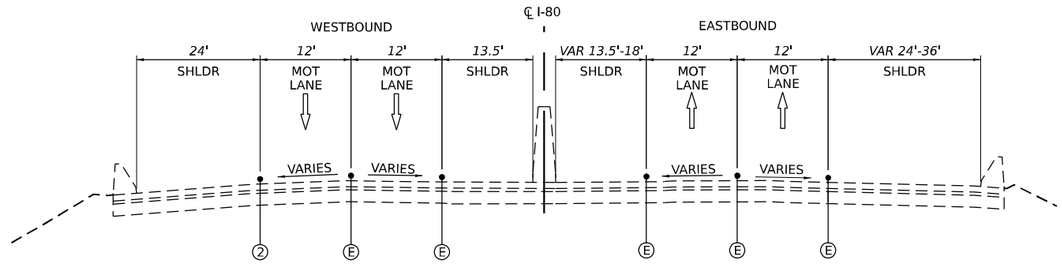

MOT TYPICAL SECTION STAGE 3 / 3 - SUBSTAGE

I-80 MAINLINE
STA. 725+00 TO STA. 735+00
N.T.S.

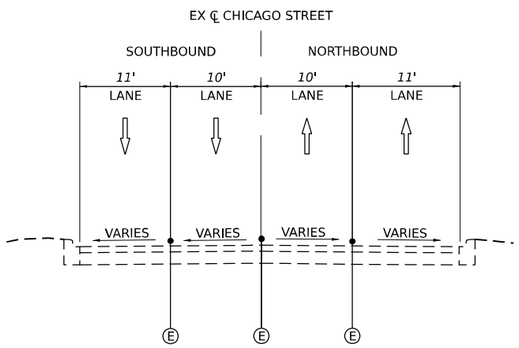

MOT TYPICAL SECTION STAGE 3 / 3 - SUBSTAGE

CHICAGO STREET
STA. 10+00 TO STA. 25+00
N.T.S.

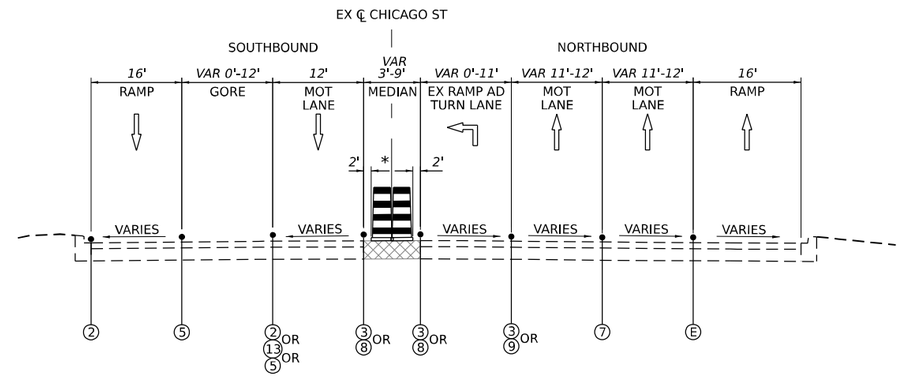

MOT TYPICAL SECTION STAGE 3

CHICAGO STREET
STA. 25+00 TO STA 38+50
* REDUCE DRUMS DOWN TO ONE WHEN MEDIAN
IS LESS THAN 6' WIDE WITH NO SIGNS
N.T.S.

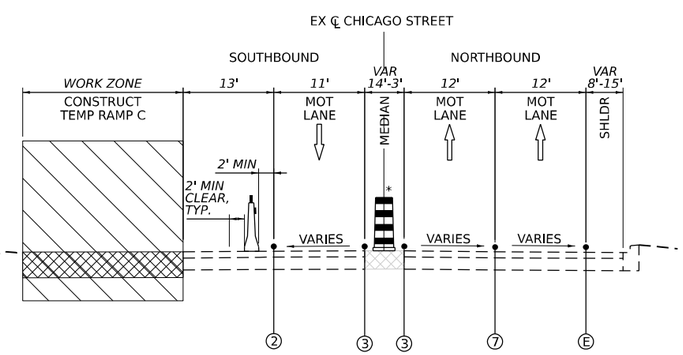

MOT TYPICAL SECTION STAGE 3 / 3 - SUBSTAGE

CHICAGO STREET
STA. 38+50 TO STA 43+00
* REDUCE DRUMS DOWN TO ONE WHEN MEDIAN
IS LESS THAN 6' WIDE WITH NO SIGNS
N.T.S.

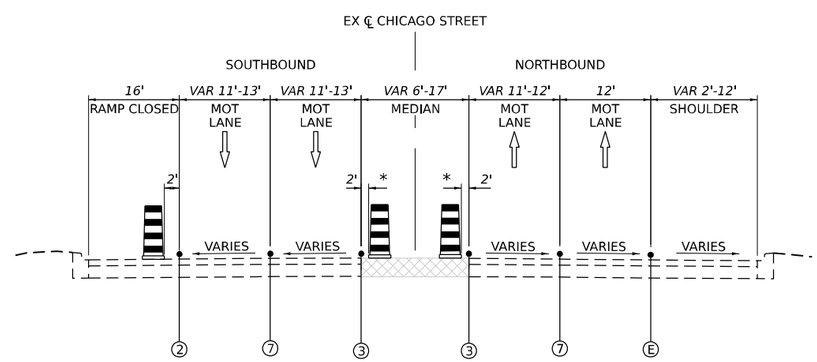

MOT TYPICAL SECTION STAGE 3 / 3 - SUBSTAGE

CHICAGO STREET
STA. 43+00 TO STA 47+00
* REDUCE DRUMS DOWN TO ONE WHEN MEDIAN
IS LESS THAN 6' WIDE WITH NO SIGNS
N.T.S.

LEGEND

- (E) EXISTING PAVEMENT MARKING
- (P) PERMANENT PAVEMENT MARKING
- (R) PAVEMENT MARKING REMOVAL
- (1) TEMP PVT MK - LINE 4": 9' SKIP, 3' DASH WHITE
- (2) TEMP PVT MK - LINE 4": SOLID WHITE
- (3) TEMP PVT MK - LINE 4": SOLID YELLOW
- (4) TEMP PVT MK - LINE 5": 30' SKIP, 10' DASH WHITE
- (5) TEMP PVT MK - LINE 8": SOLID WHITE
- (6) TEMP PVT MK - LINE 12": SOLID WHITE, CHEVRONS AT 30'
- (7) TEMP PVT MK - LINE 4": 30' SKIP, 10' DASH WHITE
- (8) TEMP PVT MK - LINE 4": SOLID DOUBLE YELLOW 11" C-C
- (9) TEMP PVT MK - LINE 6": SOLID WHITE
- (10) TEMP PVT MK - LINE 24": SOLID WHITE
- (11) TEMP PVT MK - LINE 24": WHITE LETTERS AND SYMBOLS
- (12) TEMP PVT MK - LINE 12": SOLID YELLOW
- (13) TEMP PVT MK - LINE 4": 6' SKIP, 2' DASH WHITE

TEMPORARY PAVEMENT MARKING TYPES:
I-80 AND RAMPS - EPOXY
CHICAGO STREET - WINTER - EPOXY
CHICAGO STREET - NON-WINTER - TYPE IV TAPE

WORK ZONE

TEMPORARY PAVEMENT (ACTIVELY CONSTRUCTING)

TEMPORARY PAVEMENT (PREVIOUSLY CONSTRUCTED)

TEMPORARY TYPE II BARRICADE OR DRUM
I-80 AND RAMPS: 100' C-C TANGENTS, 50' ON TAPERS
25' ON RAMPS
CHICAGO STREET: 50' C-C TANGENTS, 25' ON TAPERS
DEVICE LIGHTS SHOULD BE INSTALLED PER STANDARD SPECIAL PROVISION SECTION 701.16

TEMPORARY CONCRETE BARRIER WITH TYPE C REFLECTORS PER STANDARDS 704001 AND 782006 AND PINNING AS DETAILED IN THE MOT NOTES, SCHEDULE OR PLAN

TEMPORARY CONCRETE BARRIER WITH GLARE SCREEN

EXISTING GUARDRAIL

NOTES:
1. TRAFFIC CONTROL PLANS SHOW HMA TEMPORARY PAVEMENT OPTION AS VISUAL ONLY. SEE ROADWAY TYPICAL SECTIONS FOR TEMPORARY PAVEMENT STRUCTURE OPTIONS.

MODEL: Default
FILE NAME: pw://transystems-pw.bentley.com:transyscorp-pw1-hosted/Documents/Projects_2018/CH401/401180022/03-WSP/CAD/62R23-RB-1/Sheets/CwlID162R23-ih-EAST-MOT-typical-04

BURNS McDONNELL

USER NAME = USGP718052	DESIGNED - JAP	REVISED -	
	DRAWN - TMM	REVISED -	
PLOT SCALE = 100.000 ' / in.	CHECKED - JIR	REVISED -	
PLOT DATE = 11/6/2025	DATE - 11/7/2025	REVISED -	

STATE OF ILLINOIS
DEPARTMENT OF TRANSPORTATION

SUGGESTED STAGES OF CONSTRUCTION AND TRAFFIC CONTROL
TYPICAL SECTIONS

SCALE: NTS | SHEET 11 OF 18 SHEETS | STA. TO STA.

F.A.I. RTE.	SECTION	COUNTY	TOTAL SHEETS	SHEET NO.
80	FAI 80 21 STRUCTURE 2	WILL	1230	173
		CONTRACT NO. 62R23		
		ILLINOIS	FED. AID PROJECT	

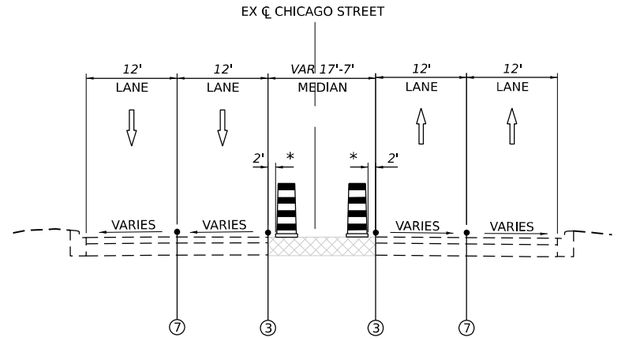

MOT TYPICAL SECTION STAGE 3 / 3 - SUBSTAGE

CHICAGO STREET
STA. 47+00 TO STA 50+00
* REDUCE DRUMS DOWN TO ONE WHEN MEDIAN
IS LESS THAN 6' WIDE WITH NO SIGNS
N.T.S.

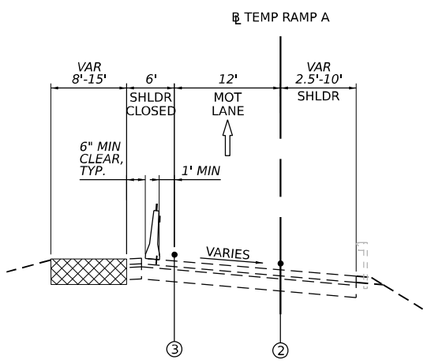

MOT TYPICAL SECTION STAGE 3

TEMP RAMP A
STA. 514+00 TO STA. 520+00
N.T.S.

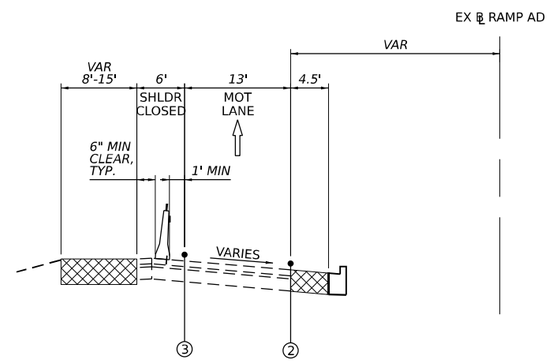

MOT TYPICAL SECTION STAGE 3

EX RAMP AD
STA. 3+00 STA. 7+00
N.T.S.

LEGEND

- (E) EXISTING PAVEMENT MARKING
- (P) PERMANENT PAVEMENT MARKING
- (R) PAVEMENT MARKING REMOVAL
- (1) TEMP PVT MK - LINE 4": 9' SKIP, 3' DASH WHITE
- (2) TEMP PVT MK - LINE 4": SOLID WHITE
- (3) TEMP PVT MK - LINE 4": SOLID YELLOW
- (4) TEMP PVT MK - LINE 5": 30' SKIP, 10' DASH WHITE
- (5) TEMP PVT MK - LINE 8": SOLID WHITE
- (6) TEMP PVT MK - LINE 12": SOLID WHITE, CHEVRONS AT 30'
- (7) TEMP PVT MK - LINE 4": 30' SKIP, 10' DASH WHITE
- (8) TEMP PVT MK - LINE 4": SOLID DOUBLE YELLOW 11" C-C
- (9) TEMP PVT MK - LINE 6": SOLID WHITE
- (10) TEMP PVT MK - LINE 24": SOLID WHITE
- (11) TEMP PVT MK - LINE 24": WHITE LETTERS AND SYMBOLS
- (12) TEMP PVT MK - LINE 12": SOLID YELLOW
- (13) TEMP PVT MK - LINE 4": 6' SKIP, 2' DASH WHITE

TEMPORARY PAVEMENT MARKING TYPES:
I-80 AND RAMPS - EPOXY
CHICAGO STREET - WINTER - EPOXY
CHICAGO STREET - NON-WINTER - TYPE IV TAPE

WORK ZONE

TEMPORARY PAVEMENT (ACTIVELY CONSTRUCTING)

TEMPORARY PAVEMENT (PREVIOUSLY CONSTRUCTED)

TEMPORARY TYPE II BARRICADE OR DRUM
I-80 AND RAMPS: 100' C-C TANGENTS, 50' ON TAPERS
25' ON RAMPS
CHICAGO STREET: 50' C-C TANGENTS, 25' ON TAPERS
DEVICE LIGHTS SHOULD BE INSTALLED PER STANDARD SPECIAL PROVISION SECTION 701.16

TEMPORARY CONCRETE BARRIER WITH TYPE C REFLECTORS PER STANDARDS 704001 AND 782006 AND PINNING AS DETAILED IN THE MOT NOTES, SCHEDULE OR PLAN

TEMPORARY CONCRETE BARRIER WITH GLARE SCREEN

EXISTING GUARDRAIL

NOTES:
1. TRAFFIC CONTROL PLANS SHOW HMA TEMPORARY PAVEMENT OPTION AS VISUAL ONLY. SEE ROADWAY TYPICAL SECTIONS FOR TEMPORARY PAVEMENT STRUCTURE OPTIONS.

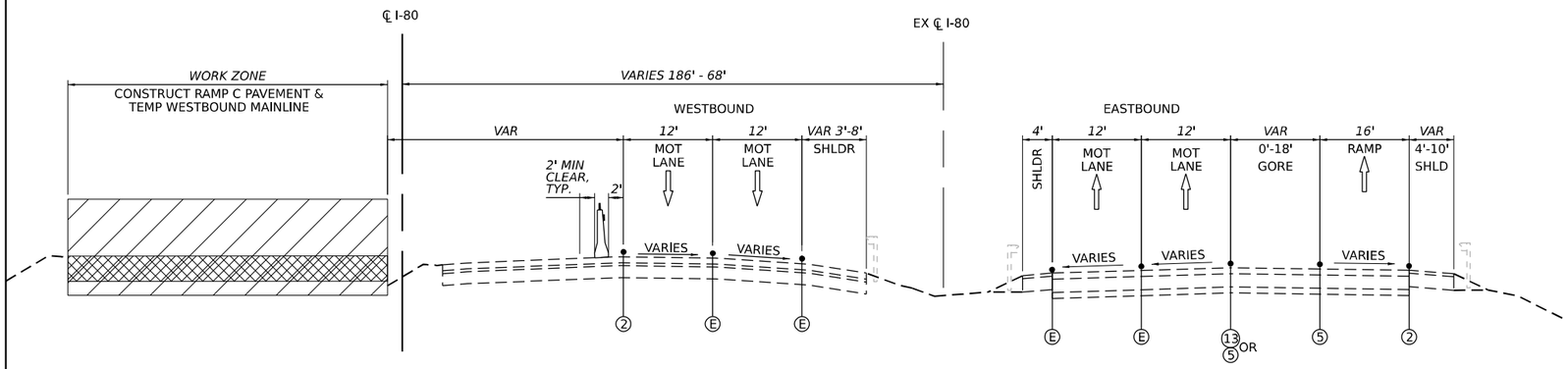

MOT TYPICAL SECTION STAGE 3 - SUBSTAGE

I-80 MAINLINE
STA. 60+00 TO STA. 63+70
N.T.S.

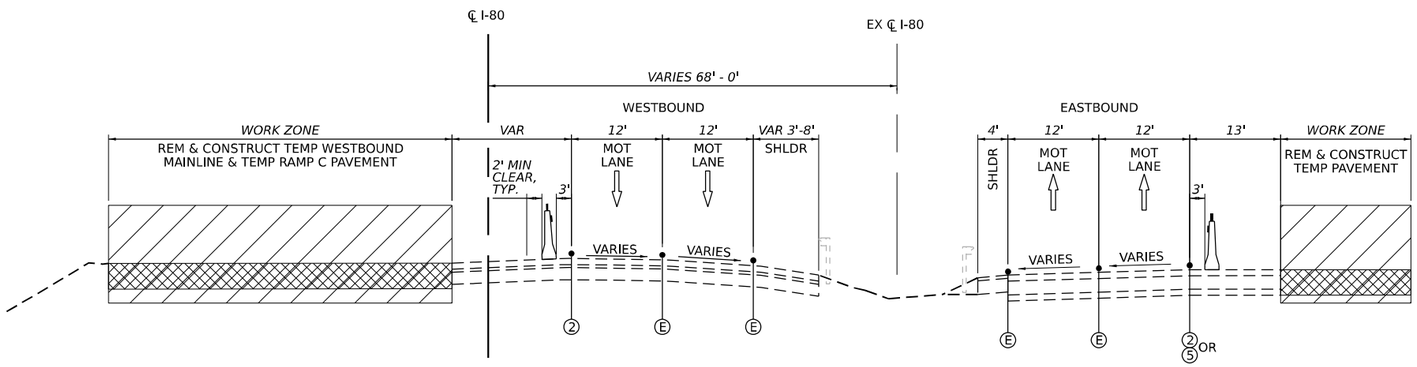

MOT TYPICAL SECTION STAGE 3 - SUBSTAGE

I-80 MAINLINE
STA. 63+70 TO STA. 704+70
N.T.S.

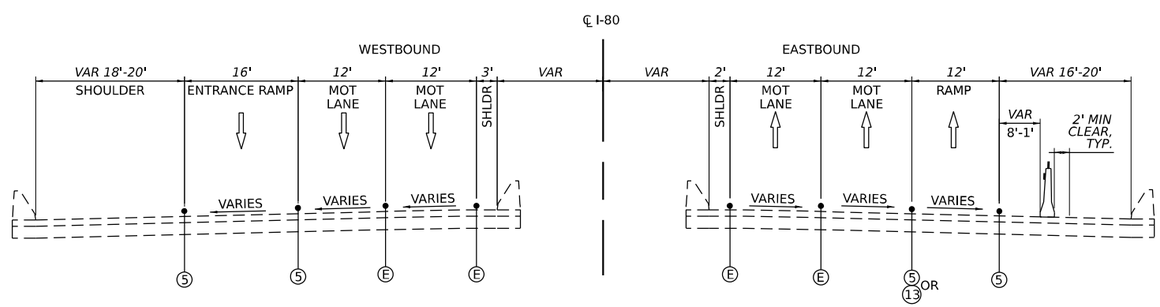

MOT TYPICAL SECTION STAGE 3 - SUBSTAGE

I-80 MAINLINE
STA. 704+70 TO STA. 706+40
N.T.S.

LEGEND

- (E) EXISTING PAVEMENT MARKING
- (P) PERMANENT PAVEMENT MARKING
- (R) PAVEMENT MARKING REMOVAL
- (1) TEMP PVT MK - LINE 4": 9' SKIP, 3' DASH WHITE
- (2) TEMP PVT MK - LINE 4": SOLID WHITE
- (3) TEMP PVT MK - LINE 4": SOLID YELLOW
- (4) TEMP PVT MK - LINE 5": 30' SKIP, 10' DASH WHITE
- (5) TEMP PVT MK - LINE 8": SOLID WHITE
- (6) TEMP PVT MK - LINE 12": SOLID WHITE, CHEVRONS AT 30'
- (7) TEMP PVT MK - LINE 4": 30' SKIP, 10' DASH WHITE
- (8) TEMP PVT MK - LINE 4": SOLID DOUBLE YELLOW 11" C-C
- (9) TEMP PVT MK - LINE 6": SOLID WHITE
- (10) TEMP PVT MK - LINE 24": SOLID WHITE
- (11) TEMP PVT MK - LINE 24": WHITE LETTERS AND SYMBOLS
- (12) TEMP PVT MK - LINE 12": SOLID YELLOW
- (13) TEMP PVT MK - LINE 4": 6' SKIP, 2' DASH WHITE

TEMPORARY PAVEMENT MARKING TYPES:
I-80 AND RAMPS - EPOXY
CHICAGO STREET - WINTER - EPOXY
CHICAGO STREET - NON-WINTER - TYPE IV TAPE

WORK ZONE

TEMPORARY PAVEMENT (ACTIVELY CONSTRUCTING)

TEMPORARY PAVEMENT (PREVIOUSLY CONSTRUCTED)

TEMPORARY TYPE II BARRICADE OR DRUM
I-80 AND RAMPS: 100' C-C TANGENTS, 50' ON TAPERS
25' ON RAMPS
CHICAGO STREET: 50' C-C TANGENTS, 25' ON TAPERS
DEVICE LIGHTS SHOULD BE INSTALLED PER STANDARD SPECIAL PROVISION SECTION 701.16

TEMPORARY CONCRETE BARRIER WITH TYPE C REFLECTORS PER STANDARDS 704001 AND 782006 AND PINNING AS DETAILED IN THE MOT NOTES, SCHEDULE OR PLAN

TEMPORARY CONCRETE BARRIER WITH GLARE SCREEN

EXISTING GUARDRAIL

NOTES:
1. TRAFFIC CONTROL PLANS SHOW HMA TEMPORARY PAVEMENT OPTION AS VISUAL ONLY. SEE ROADWAY TYPICAL SECTIONS FOR TEMPORARY PAVEMENT STRUCTURE OPTIONS.

MODEL: Default
FILE NAME: pw://transystems-pw.bentley.com:transyscorp-pw1-hosted/Documents/Projects_2018/CH401/401180022/03-WSP/CAD/62R23-rB-1/Sheets/CwlID162R23-ih-EAST-MOT-typical-06

BURNS McDONNELL	USER NAME = USGP718052	DESIGNED - JAP	REVISED -	STATE OF ILLINOIS DEPARTMENT OF TRANSPORTATION	SUGGESTED STAGES OF CONSTRUCTION AND TRAFFIC CONTROL TYPICAL SECTIONS	F.A.I. RTE.	SECTION	COUNTY	TOTAL SHEETS	SHEET NO.
		DRAWN - TMM	REVISED -			80	FAI 80 21 STRUCTURE 2	WILL	1230	175
	PLOT SCALE = 100.000 ' / in.	CHECKED - JIR	REVISED -					CONTRACT NO. 62R23		
	PLOT DATE = 11/6/2025	DATE - 11/7/2025	REVISED -		SCALE: NTS / SHEET 13 OF 18 SHEETS / STA. / TO STA.		ILLINOIS	FED. AID PROJECT		

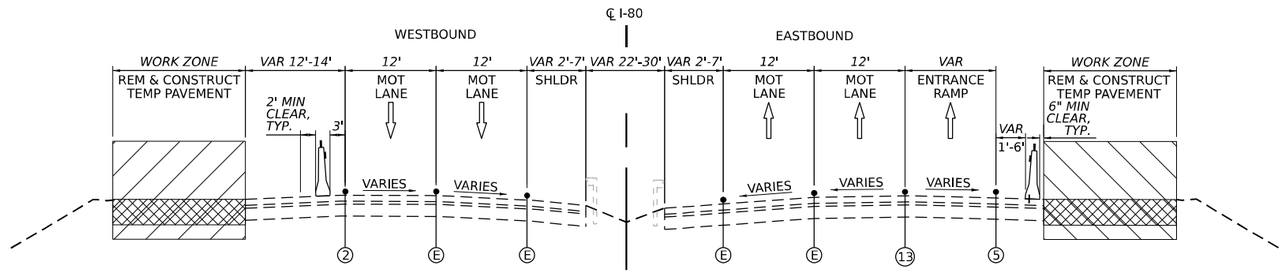

MOT TYPICAL SECTION STAGE 3 - SUBSTAGE

I-80 MAINLINE
STA. 706+40 TO STA. 711+00
N.T.S.

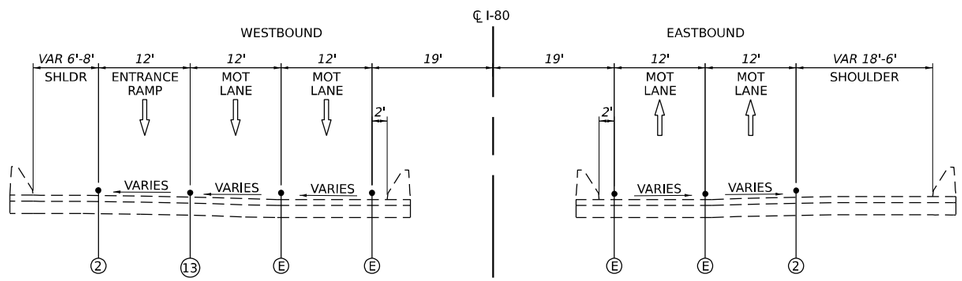

MOT TYPICAL SECTION STAGE 3 - SUBSTAGE

I-80 MAINLINE
STA. 711+00 TO STA. 715+60
N.T.S.

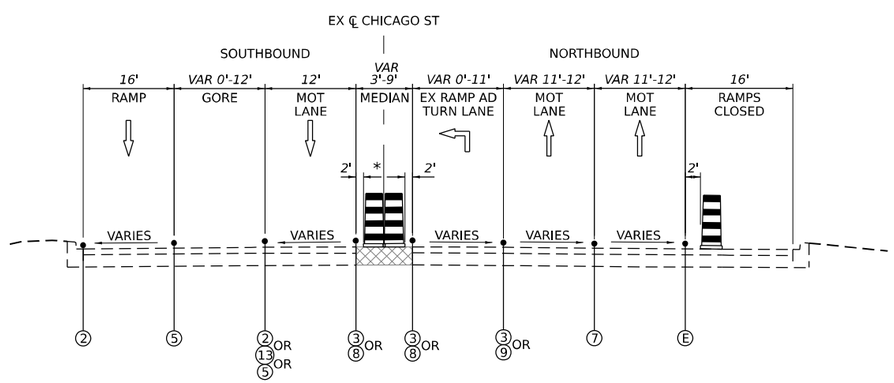

MOT TYPICAL SECTION STAGE 3 - SUBSTAGE

CHICAGO STREET
STA. 25+00 TO STA 38+50
* REDUCE DRUMS DOWN TO ONE WHEN MEDIAN
IS LESS THAN 6' WIDE WITH NO SIGNS
N.T.S.

LEGEND

- (E) EXISTING PAVEMENT MARKING
- (P) PERMANENT PAVEMENT MARKING
- (R) PAVEMENT MARKING REMOVAL
- (1) TEMP PVT MK - LINE 4": 9' SKIP, 3' DASH WHITE
- (2) TEMP PVT MK - LINE 4": SOLID WHITE
- (3) TEMP PVT MK - LINE 4": SOLID YELLOW
- (4) TEMP PVT MK - LINE 5": 30' SKIP, 10' DASH WHITE
- (5) TEMP PVT MK - LINE 8": SOLID WHITE
- (6) TEMP PVT MK - LINE 12": SOLID WHITE, CHEVRONS AT 30'
- (7) TEMP PVT MK - LINE 4": 30' SKIP, 10' DASH WHITE
- (8) TEMP PVT MK - LINE 4": SOLID DOUBLE YELLOW 11" C-C
- (9) TEMP PVT MK - LINE 6": SOLID WHITE
- (10) TEMP PVT MK - LINE 24": SOLID WHITE
- (11) TEMP PVT MK - LINE 24": WHITE LETTERS AND SYMBOLS
- (12) TEMP PVT MK - LINE 12": SOLID YELLOW
- (13) TEMP PVT MK - LINE 4": 6' SKIP, 2' DASH WHITE

TEMPORARY PAVEMENT MARKING TYPES:
I-80 AND RAMPS - EPOXY
CHICAGO STREET - WINTER - EPOXY
CHICAGO STREET - NON-WINTER - TYPE IV TAPE

WORK ZONE

TEMPORARY PAVEMENT (ACTIVELY CONSTRUCTING)

TEMPORARY PAVEMENT (PREVIOUSLY CONSTRUCTED)

TEMPORARY TYPE II BARRICADE OR DRUM
I-80 AND RAMPS: 100' C-C TANGENTS, 50' ON TAPERS
25' ON RAMPS
CHICAGO STREET: 50' C-C TANGENTS, 25' ON TAPERS
DEVICE LIGHTS SHOULD BE INSTALLED PER STANDARD SPECIAL PROVISION SECTION 701.16

TEMPORARY CONCRETE BARRIER WITH TYPE C REFLECTORS PER STANDARDS 704001 AND 782006 AND PINNING AS DETAILED IN THE MOT NOTES, SCHEDULE OR PLAN

TEMPORARY CONCRETE BARRIER WITH GLARE SCREEN

EXISTING GUARDRAIL

NOTES:
1. TRAFFIC CONTROL PLANS SHOW HMA TEMPORARY PAVEMENT OPTION AS VISUAL ONLY. SEE ROADWAY TYPICAL SECTIONS FOR TEMPORARY PAVEMENT STRUCTURE OPTIONS.

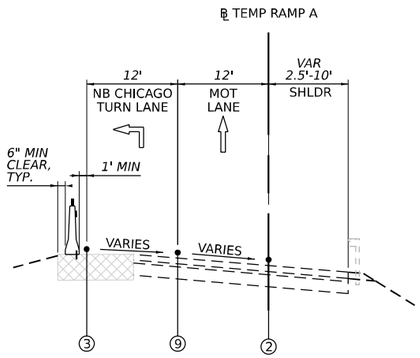

MOT TYPICAL SECTION STAGE 3 - SUBSTAGE

TEMP RAMP A
STA. 514+00 TO STA. 520+00
N.T.S.

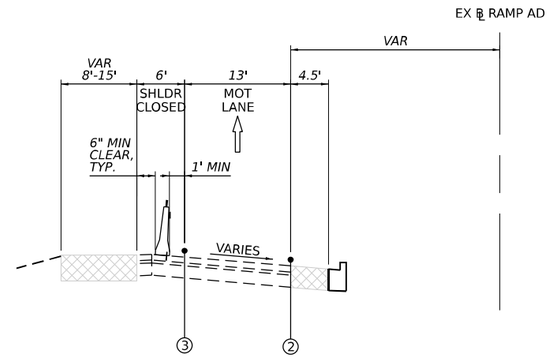

MOT TYPICAL SECTION STAGE 3 - SUBSTAGE

EX RAMP AD
STA. 3+00 STA. 7+00
N.T.S.

LEGEND

- (E) EXISTING PAVEMENT MARKING
- (P) PERMANENT PAVEMENT MARKING
- (R) PAVEMENT MARKING REMOVAL
- (1) TEMP PVT MK - LINE 4": 9' SKIP, 3' DASH WHITE
- (2) TEMP PVT MK - LINE 4": SOLID WHITE
- (3) TEMP PVT MK - LINE 4": SOLID YELLOW
- (4) TEMP PVT MK - LINE 5": 30' SKIP, 10' DASH WHITE
- (5) TEMP PVT MK - LINE 8": SOLID WHITE
- (6) TEMP PVT MK - LINE 12": SOLID WHITE, CHEVRONS AT 30'
- (7) TEMP PVT MK - LINE 4": 30' SKIP, 10' DASH WHITE
- (8) TEMP PVT MK - LINE 4": SOLID DOUBLE YELLOW 11" C-C
- (9) TEMP PVT MK - LINE 6": SOLID WHITE
- (10) TEMP PVT MK - LINE 24": SOLID WHITE
- (11) TEMP PVT MK - LINE 24": WHITE LETTERS AND SYMBOLS
- (12) TEMP PVT MK - LINE 12": SOLID YELLOW
- (13) TEMP PVT MK - LINE 4": 6' SKIP, 2' DASH WHITE

TEMPORARY PAVEMENT MARKING TYPES:
I-80 AND RAMPS - EPOXY
CHICAGO STREET - WINTER - EPOXY
CHICAGO STREET - NON-WINTER - TYPE IV TAPE

WORK ZONE

TEMPORARY PAVEMENT (ACTIVELY CONSTRUCTING)

TEMPORARY PAVEMENT (PREVIOUSLY CONSTRUCTED)

TEMPORARY TYPE II BARRICADE OR DRUM
I-80 AND RAMPS: 100' C-C TANGENTS, 50' ON TAPERS
25' ON RAMPS
CHICAGO STREET: 50' C-C TANGENTS, 25' ON TAPERS
DEVICE LIGHTS SHOULD BE INSTALLED PER STANDARD SPECIAL PROVISION SECTION 701.16

TEMPORARY CONCRETE BARRIER WITH TYPE C REFLECTORS PER STANDARDS 704001 AND 782006 AND PINNING AS DETAILED IN THE MOT NOTES, SCHEDULE OR PLAN

TEMPORARY CONCRETE BARRIER WITH GLARE SCREEN

EXISTING GUARDRAIL

NOTES:
1. TRAFFIC CONTROL PLANS SHOW HMA TEMPORARY PAVEMENT OPTION AS VISUAL ONLY. SEE ROADWAY TYPICAL SECTIONS FOR TEMPORARY PAVEMENT STRUCTURE OPTIONS.

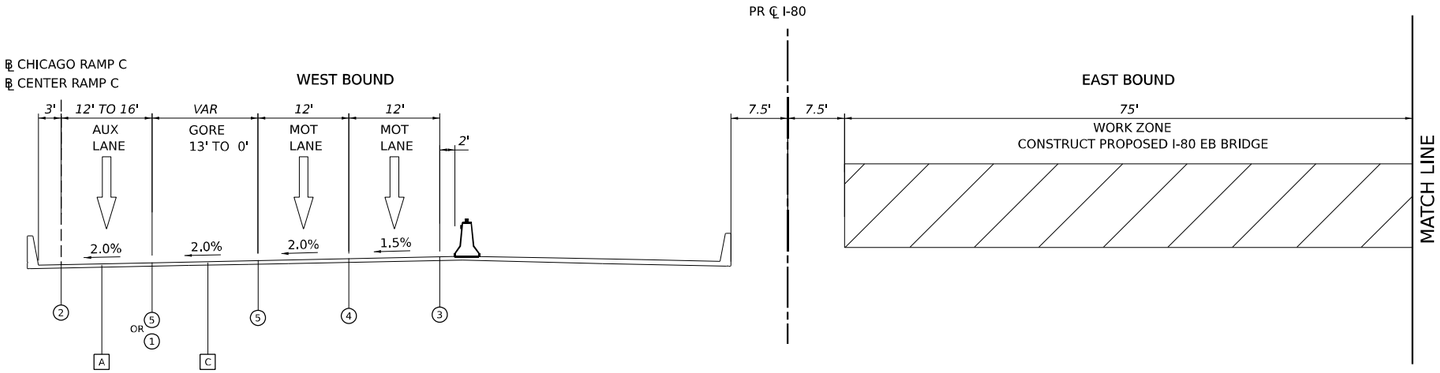

I-80 PR DES PLAINES RIVER BRIDGE MOT TYPICAL SECTION (STAGE 4)

PROP STA 37+89.00 TO 60+04.87

C STA 37+89.00 TO 41+31.00

A 16' RAMP LANE 37+89.00 TO 41+31.00
16' RAMP LANE 56+91.00 to 59+95.61
12' LANE 42+08.75 to 56+24.71

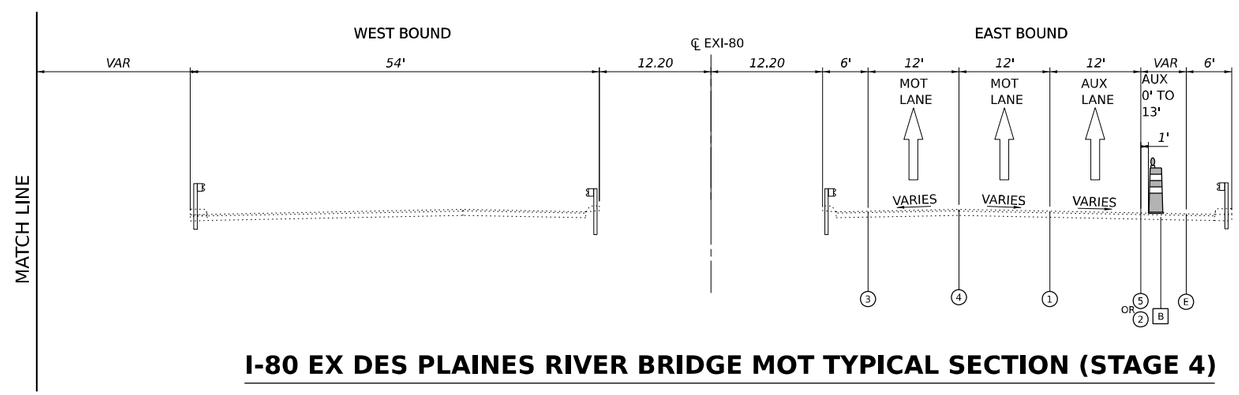

I-80 EX DES PLAINES RIVER BRIDGE MOT TYPICAL SECTION (STAGE 4)

EX STA TO 671+75.84 TO 694+94.06

B STA 671+75.84 TO 674+91.36

LEGEND

- (E) EXISTING PAVEMENT MARKING
- (P) PERMANENT PAVEMENT MARKING
- (R) PAVEMENT MARKING REMOVAL
- (1) TEMP PVT MK - LINE 8" - EPOXY: 9' SKIP, 3' DASH WHITE
- (2) TEMP PVT MK - LINE 4" - EPOXY: SOLID WHITE
- (3) TEMP PVT MK - LINE 4" - EPOXY: SOLID YELLOW
- (4) TEMP PVT MK - LINE 5" - EPOXY: 30' SKIP, 10' DASH WHITE
- (5) TEMP PVT MK - LINE 8" - EPOXY: SOLID WHITE
- (6) TEMP PVT MK - LINE 12" - EPOXY: SOLID WHITE
- (7) TEMP PVT MK - LINE 6" - EPOXY: SOLID WHITE
- (8) TEMP PVT MK - LINE 4" - EPOXY: SOLID DOUBLE YELLOW
- (9) TEMP PVT MK - LINE 4" - EPOXY: 30' SKIP, 10' DASH WHITE
- (10) TEMP PVT MK - LINE 24" - EPOXY: SOLID WHITE
- (11) TEMP PVT MK - LINE 12" - EPOXY: YELLOW 45° DIAGONALS @ 75' SPACING INTERVALS
- (12) TEMP PVT MK - LINE 4" - EPOXY: WHITE 45° DIAGONALS
- (13) TEMP PVT MK - EPOXY: WHITE LETTERS AND SYMBOLS
- (14) TEMP PVT MK - LINE 6" - EPOXY: 9' SKIP, 3' DASH WHITE
- (15) TEMP PVT MK - LINE 4" - TYPE IV TAPE: SOLID YELLOW
- (16) TEMP PVT MK - LINE 4" - TYPE IV TAPE: SOLID WHITE
- (17) TEMP PVT MK - LINE 8" - TYPE IV TAPE: SOLID WHITE
- (18) TEMP PVT MK - LINE 12" - TYPE IV TAPE: SOLID WHITE
- (19) TEMP PVT MK - LINE 4" - TYPE IV TAPE: 30' SKIP, 10' DASH WHITE
- (20) TEMP PVT MK - LINE 24" - TYPE IV TAPE: SOLID WHITE

- WORK ZONE
- TEMPORARY PAVEMENT (ACTIVELY CONSTRUCTING)
- TEMPORARY PAVEMENT (PREVIOUSLY CONSTRUCTED)
- TYPE II BARRICADE OR DRUM @ 100 FT C-C ALONG ROADWAY (TANGENT), 50 FT C-C ALONG TAPERS AND RAMPS
- TEMPORARY CONCRETE BARRIER WITH TYPE C REFLECTORS AND ANCHOR PER STANDARDS 704001 AND 782006
- TEMPORARY CONCRETE BARRIER WITH GLARE SCREEN
- EXISTING GUARDRAIL
- * FROM PREVIOUS STAGE

NOTES:

1. TRAFFIC CONTROL PLANS SHOW HMA TEMPORARY PAVEMENT OPTION AS VISUAL ONLY. SEE ROADWAY TYPICAL SECTIONS FOR TEMPORARY PAVEMENT STRUCTURE OPTIONS.

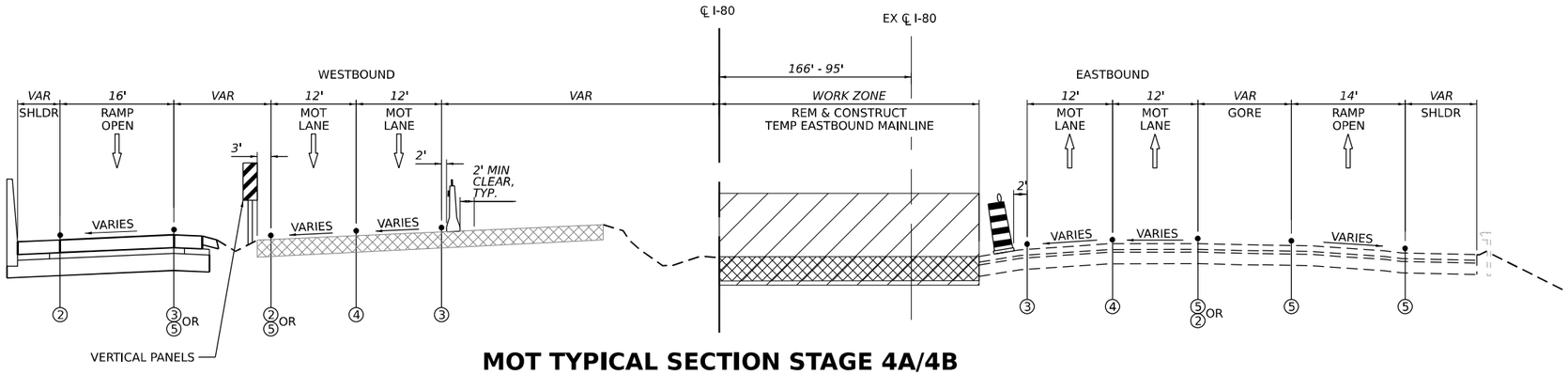

MOT TYPICAL SECTION STAGE 4A/4B

I-80 MAINLINE
STA. 60+00 TO STA. 63+70
N.T.S.

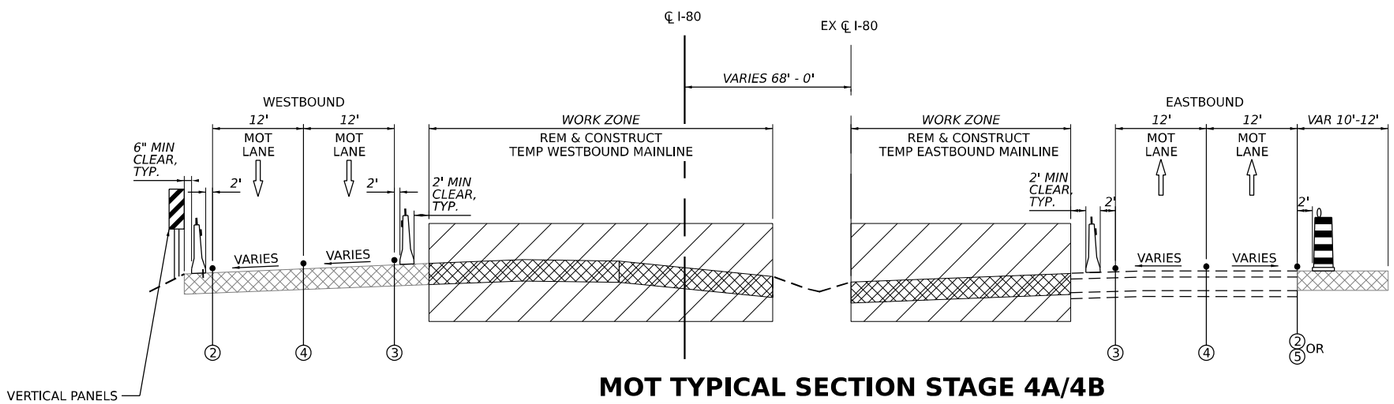

MOT TYPICAL SECTION STAGE 4A/4B

I-80 MAINLINE
STA. 63+70 TO STA. 705+00
N.T.S.

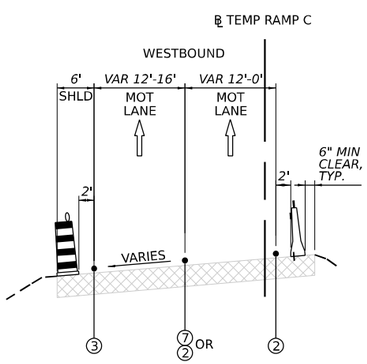

MOT TYPICAL SECTION STAGE 4A/4B/5A/5B

TEMP RAMP C
STA. 109+50 TO STA. 114+00
N.T.S.

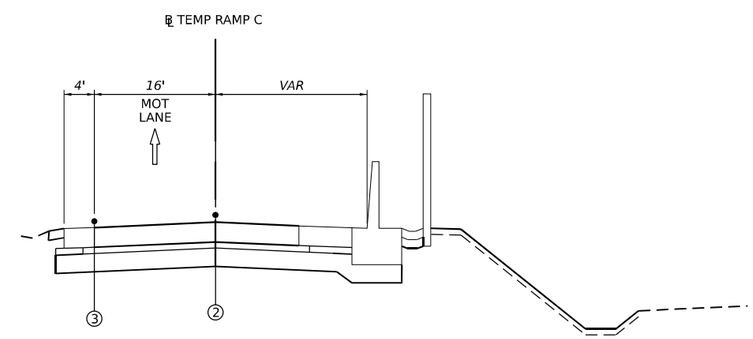

MOT TYPICAL SECTION STAGE 4A/4B/5A/5B

RAMP C
STA. 114+00 TO STA. 117+58
N.T.S.

LEGEND

- Ⓔ EXISTING PAVEMENT MARKING
- Ⓟ PERMANENT PAVEMENT MARKING
- Ⓡ PAVEMENT MARKING REMOVAL
- ① TEMP PVT MK - LINE 4": 9' SKIP, 3' DASH WHITE
- ② TEMP PVT MK - LINE 4": SOLID WHITE
- ③ TEMP PVT MK - LINE 4": SOLID YELLOW
- ④ TEMP PVT MK - LINE 5": 30' SKIP, 10' DASH WHITE
- ⑤ TEMP PVT MK - LINE 8": SOLID WHITE
- ⑥ TEMP PVT MK - LINE 12": SOLID WHITE, CHEVRONS AT 30'
- ⑦ TEMP PVT MK - LINE 4": 30' SKIP, 10' DASH WHITE
- ⑧ TEMP PVT MK - LINE 4": SOLID DOUBLE YELLOW 11" C-C
- ⑨ TEMP PVT MK - LINE 6": SOLID WHITE
- ⑩ TEMP PVT MK - LINE 24": SOLID WHITE
- ⑪ TEMP PVT MK - LINE 24": WHITE LETTERS AND SYMBOLS
- ⑫ TEMP PVT MK - LINE 12": SOLID YELLOW
- ⑬ TEMP PVT MK - LINE 4": 6' SKIP, 2' DASH WHITE

TEMPORARY PAVEMENT MARKING TYPES:
I-80 AND RAMPS - EPOXY
CHICAGO STREET - WINTER - EPOXY
CHICAGO STREET - NON-WINTER - TYPE IV TAPE

WORK ZONE

TEMPORARY PAVEMENT (ACTIVELY CONSTRUCTING)

TEMPORARY PAVEMENT (PREVIOUSLY CONSTRUCTED)

TEMPORARY TYPE II BARRICADE OR DRUM
I-80 AND RAMPS: 100' C-C TANGENTS, 50' ON TAPERS
25' ON RAMPS
CHICAGO STREET: 50' C-C TANGENTS, 25' ON TAPERS
DEVICE LIGHTS SHOULD BE INSTALLED PER STANDARD SPECIAL PROVISION SECTION 701.16

TEMPORARY CONCRETE BARRIER WITH TYPE C REFLECTORS PER STANDARDS 704001 AND 782006 AND PINNING AS DETAILED IN THE MOT NOTES, SCHEDULE OR PLAN

TEMPORARY CONCRETE BARRIER WITH GLARE SCREEN

EXISTING GUARDRAIL

NOTES:
1. TRAFFIC CONTROL PLANS SHOW HMA TEMPORARY PAVEMENT OPTION AS VISUAL ONLY. SEE ROADWAY TYPICAL SECTIONS FOR TEMPORARY PAVEMENT STRUCTURE OPTIONS.

MODEL: Default
FILE NAME: pw://transystems-pw.bentley.com:transyscorp-pw1-hosted/Documents/Projects_2018/CH401/401180022/03-WSP/CAD/62R23-RB-1/Sheets/Civil/D162R23-sht-EAST-MOT-typical-09

BURNS McDONNELL

USER NAME = USGP718052	DESIGNED - JAP	REVISED -	
	DRAWN - TMM	REVISED -	
PLOT SCALE = 100.000 ' / in.	CHECKED - JIR	REVISED -	
PLOT DATE = 11/6/2025	DATE - 11/7/2025	REVISED -	

STATE OF ILLINOIS
DEPARTMENT OF TRANSPORTATION

SUGGESTED STAGES OF CONSTRUCTION AND TRAFFIC CONTROL
TYPICAL SECTIONS

SCALE: NTS | SHEET 16 OF 18 SHEETS | STA. | TO STA.

F.A.I. RTE.	SECTION	COUNTY	TOTAL SHEETS	SHEET NO.
80	FAI 80 21 STRUCTURE 2	WILL	1230	179
		CONTRACT NO. 62R23		
	ILLINOIS	FED. AID PROJECT		

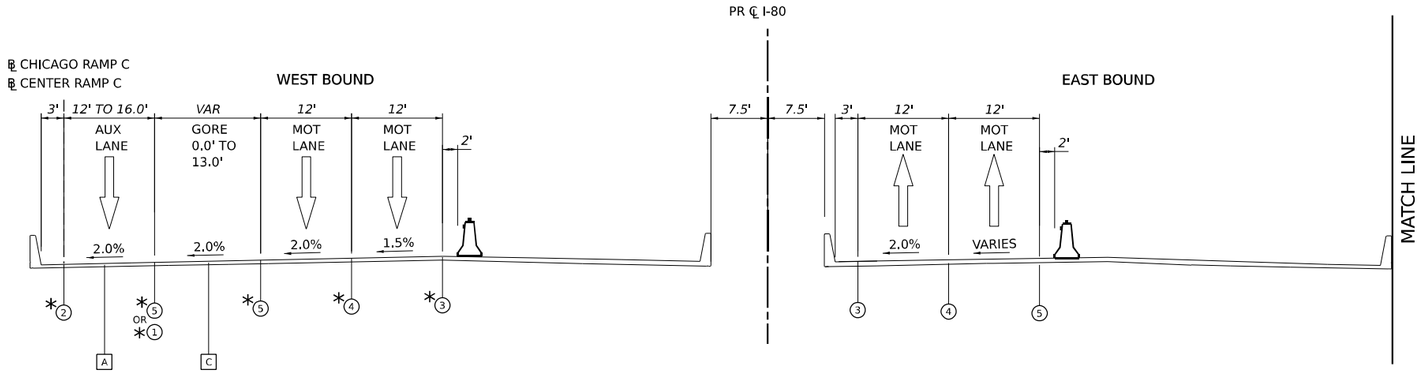

I-80 PR DES PLAINES RIVER BRIDGE MOT TYPICAL SECTION (STAGE 5)

PR STA 37+89.00 TO 60+04.87

C STA 37+89.00 TO 41+31.00

A 16' RAMP LANE 37+89.00 TO 41+31.00
16' RAMP LANE 56+91.00 to 59+95.61
12' LANE 42+08.75 to 56+24.71

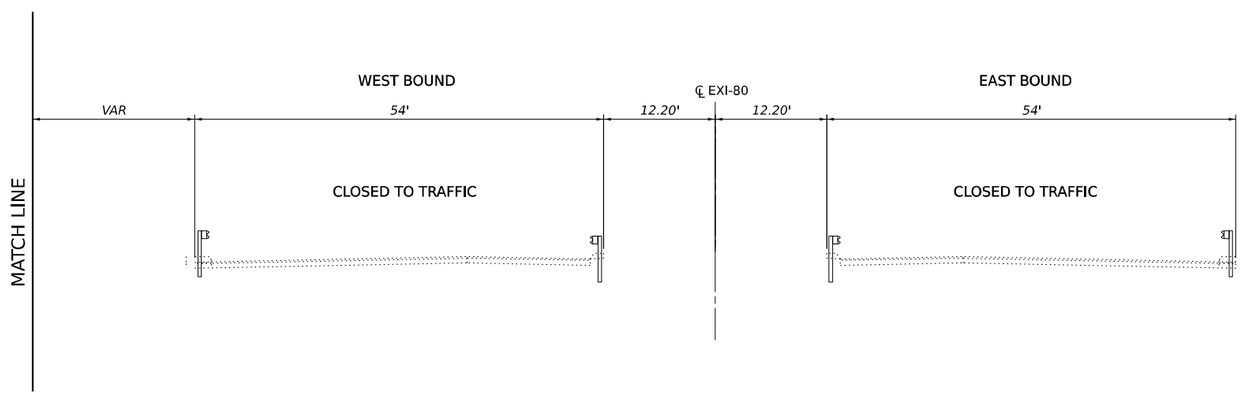

I-80 EX DES PLAINES RIVER BRIDGE MOT TYPICAL SECTION (STAGE 5)

EX STA TO 671+75.84 TO 694+94.06

LEGEND

- (E) EXISTING PAVEMENT MARKING
- (P) PERMANENT PAVEMENT MARKING
- (R) PAVEMENT MARKING REMOVAL
- (1) TEMP PVT MK - LINE 8" - EPOXY: 9' SKIP, 3' DASH WHITE
- (2) TEMP PVT MK - LINE 4" - EPOXY: SOLID WHITE
- (3) TEMP PVT MK - LINE 4" - EPOXY: SOLID YELLOW
- (4) TEMP PVT MK - LINE 5" - EPOXY: 30' SKIP, 10' DASH WHITE
- (5) TEMP PVT MK - LINE 8" - EPOXY: SOLID WHITE
- (6) TEMP PVT MK - LINE 12" - EPOXY: SOLID WHITE
- (7) TEMP PVT MK - LINE 6" - EPOXY: SOLID WHITE
- (8) TEMP PVT MK - LINE 4" - EPOXY: SOLID DOUBLE YELLOW
- (9) TEMP PVT MK - LINE 4" - EPOXY: 30' SKIP, 10' DASH WHITE
- (10) TEMP PVT MK - LINE 24" - EPOXY: SOLID WHITE
- (11) TEMP PVT MK - LINE 12" - EPOXY: YELLOW 45° DIAGONALS @ 75' SPACING INTERVALS
- (12) TEMP PVT MK - LINE 4" - EPOXY: WHITE 45° DIAGONALS
- (13) TEMP PVT MK - EPOXY: WHITE LETTERS AND SYMBOLS
- (14) TEMP PVT MK - LINE 6" - EPOXY: 9' SKIP, 3' DASH WHITE
- (15) TEMP PVT MK - LINE 4" - TYPE IV TAPE: SOLID YELLOW
- (16) TEMP PVT MK - LINE 4" - TYPE IV TAPE: SOLID WHITE
- (17) TEMP PVT MK - LINE 8" - TYPE IV TAPE: SOLID WHITE
- (18) TEMP PVT MK - LINE 12" - TYPE IV TAPE: SOLID WHITE
- (19) TEMP PVT MK - LINE 4" - TYPE IV TAPE: 30' SKIP, 10' DASH WHITE
- (20) TEMP PVT MK - LINE 24" - TYPE IV TAPE: SOLID WHITE

- WORK ZONE
- TEMPORARY PAVEMENT (ACTIVELY CONSTRUCTING)
- TEMPORARY PAVEMENT (PREVIOUSLY CONSTRUCTED)
- TYPE II BARRICADE OR DRUM @ 100 FT C-C ALONG ROADWAY (TANGENT), 50 FT C-C ALONG TAPERS AND RAMPS
- TEMPORARY CONCRETE BARRIER WITH TYPE C REFLECTORS AND ANCHOR PER STANDARDS 704001 AND 782006
- TEMPORARY CONCRETE BARRIER WITH GLARE SCREEN
- EXISTING GUARDRAIL
- * FROM PREVIOUS STAGE

NOTES:

1. TRAFFIC CONTROL PLANS SHOW HMA TEMPORARY PAVEMENT OPTION AS VISUAL ONLY. SEE ROADWAY TYPICAL SECTIONS FOR TEMPORARY PAVEMENT STRUCTURE OPTIONS.

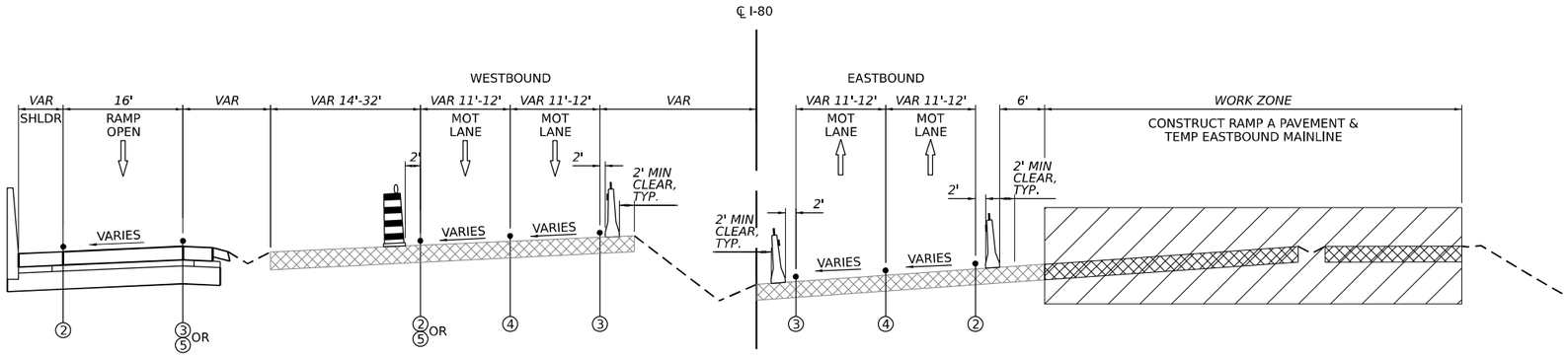

MOT TYPICAL SECTION STAGE 5A

I-80 MAINLINE
STA. 60+00 TO STA. 63+70
N.T.S.

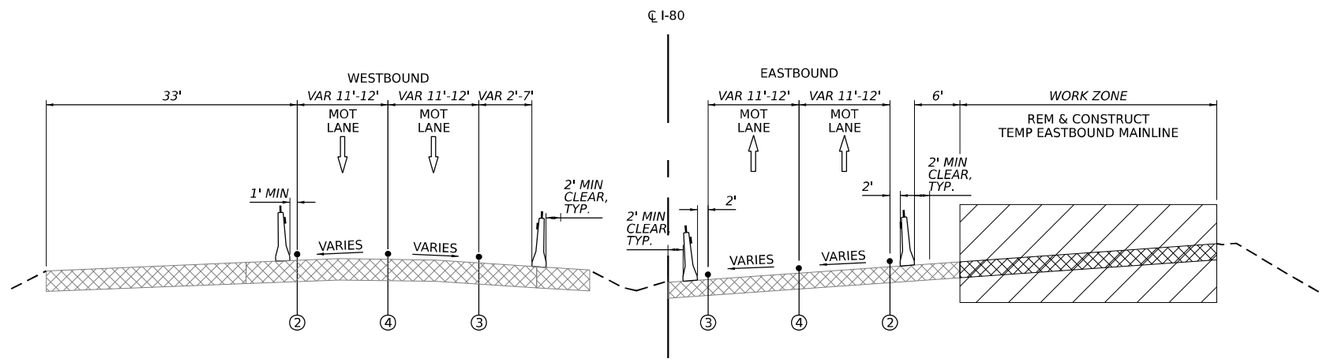

MOT TYPICAL SECTION STAGE 5A

I-80 MAINLINE
STA. 63+70 TO STA. 705+00
N.T.S.

LEGEND

- Ⓔ EXISTING PAVEMENT MARKING
- Ⓟ PERMANENT PAVEMENT MARKING
- Ⓡ PAVEMENT MARKING REMOVAL
- ① TEMP PVT MK - LINE 4": 9' SKIP, 3' DASH WHITE
- ② TEMP PVT MK - LINE 4": SOLID WHITE
- ③ TEMP PVT MK - LINE 4": SOLID YELLOW
- ④ TEMP PVT MK - LINE 5": 30' SKIP, 10' DASH WHITE
- ⑤ TEMP PVT MK - LINE 8": SOLID WHITE
- ⑥ TEMP PVT MK - LINE 12": SOLID WHITE, CHEVRONS AT 30'
- ⑦ TEMP PVT MK - LINE 4": 30' SKIP, 10' DASH WHITE
- ⑧ TEMP PVT MK - LINE 4": SOLID DOUBLE YELLOW 11" C-C
- ⑨ TEMP PVT MK - LINE 6": SOLID WHITE
- ⑩ TEMP PVT MK - LINE 24": SOLID WHITE
- ⑪ TEMP PVT MK - LINE 24": WHITE LETTERS AND SYMBOLS
- ⑫ TEMP PVT MK - LINE 12": SOLID YELLOW
- ⑬ TEMP PVT MK - LINE 4": 6' SKIP, 2' DASH WHITE

TEMPORARY PAVEMENT MARKING TYPES:
I-80 AND RAMPS - EPOXY
CHICAGO STREET - WINTER - EPOXY
CHICAGO STREET - NON-WINTER - TYPE IV TAPE

WORK ZONE

TEMPORARY PAVEMENT (ACTIVELY CONSTRUCTING)

TEMPORARY PAVEMENT (PREVIOUSLY CONSTRUCTED)

TEMPORARY TYPE II BARRICADE OR DRUM
I-80 AND RAMPS: 100' C-C TANGENTS, 50' ON TAPERS
25' ON RAMPS
CHICAGO STREET: 50' C-C TANGENTS, 25' ON TAPERS
DEVICE LIGHTS SHOULD BE INSTALLED PER STANDARD SPECIAL PROVISION SECTION 701.16

TEMPORARY CONCRETE BARRIER WITH TYPE C REFLECTORS PER STANDARDS 704001 AND 782006 AND PINNING AS DETAILED IN THE MOT NOTES, SCHEDULE OR PLAN

TEMPORARY CONCRETE BARRIER WITH GLARE SCREEN

EXISTING GUARDRAIL

NOTES:
1. TRAFFIC CONTROL PLANS SHOW HMA TEMPORARY PAVEMENT OPTION AS VISUAL ONLY. SEE ROADWAY TYPICAL SECTIONS FOR TEMPORARY PAVEMENT STRUCTURE OPTIONS.

MODEL: Default
FILE NAME: pw://transystems-pw.bentley.com:transyscorp-pw1-hosted/Documents/Projects_2018/CH401/401180022/03-WSP/CAD/62R23-RB-1/Sheets/CwlID162R23-ih-EAST-MOT-typical-10

BURNS McDONNELL	USER NAME = USGP718052	DESIGNED - JAP	REVISED -	STATE OF ILLINOIS DEPARTMENT OF TRANSPORTATION	SUGGESTED STAGES OF CONSTRUCTION AND TRAFFIC CONTROL TYPICAL SECTIONS
		DRAWN - TMM	REVISED -		
	PLOT SCALE = 100.000 ' / in.	CHECKED - JIR	REVISED -		
	PLOT DATE = 11/6/2025	DATE - 11/7/2025	REVISED -		SCALE: NTS · SHEET 17 OF 18 SHEETS · STA. · TO STA.

F.A.I. RTE.	SECTION	COUNTY	TOTAL SHEETS	SHEET NO.
80	FAI 80 21 STRUCTURE 2	WILL	1230	181
		CONTRACT NO. 62R23		
		ILLINOIS	FED. AID PROJECT	

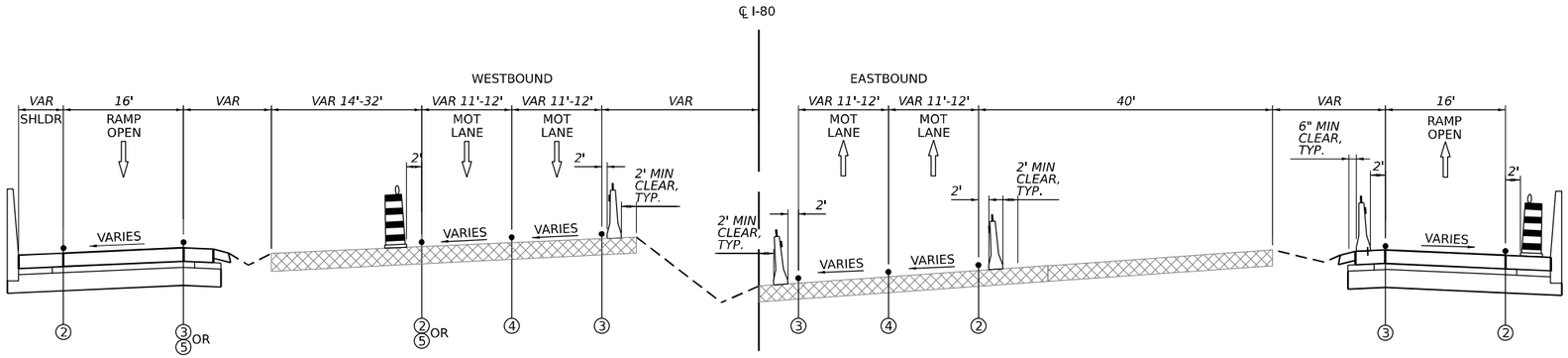

MOT TYPICAL SECTION STAGE 5B

I-80 MAINLINE
STA. 60+00 TO STA. 63+70
N.T.S.

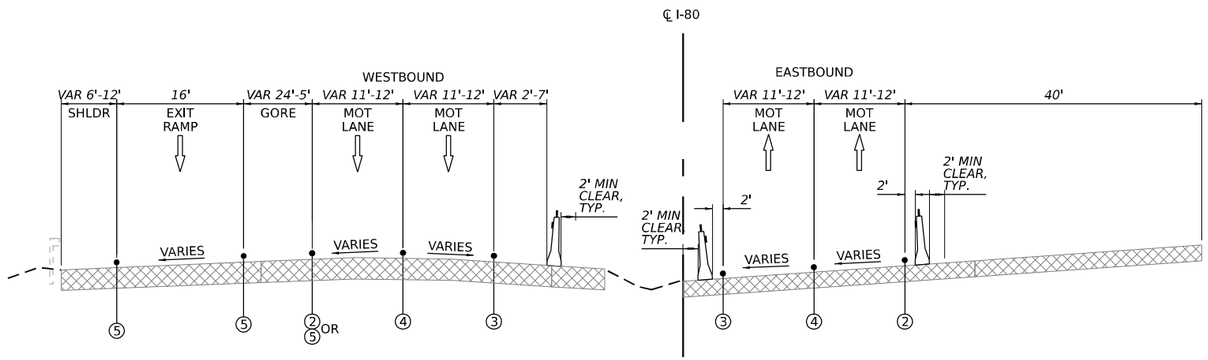

MOT TYPICAL SECTION STAGE 5B

I-80 MAINLINE
STA. 63+70 TO STA. 705+00
N.T.S.

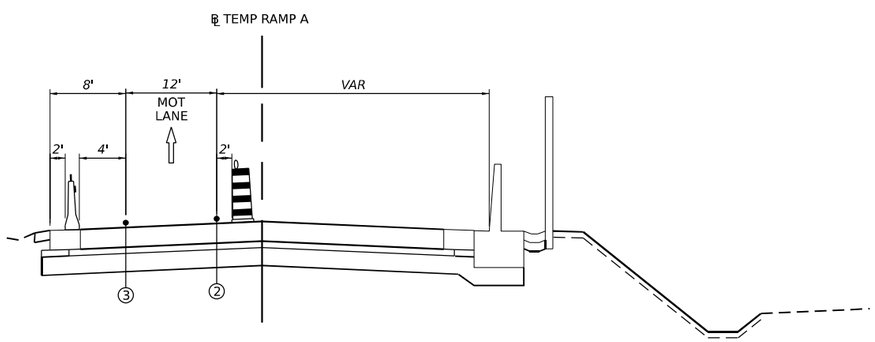

MOT TYPICAL SECTION STAGE 5B

RAMP A
STA. 505+78 TO STA. 508+12
N.T.S.

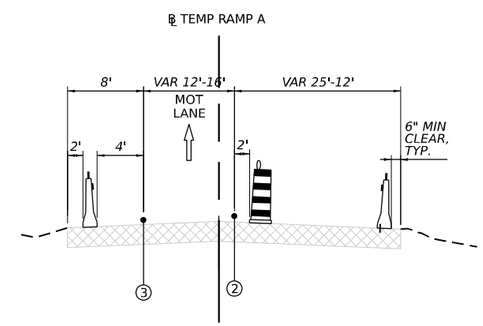

MOT TYPICAL SECTION STAGE 5B

TEMP RAMP A
STA. 508+12 TO STA. 512+34
N.T.S.

LEGEND

- (E) EXISTING PAVEMENT MARKING
- (P) PERMANENT PAVEMENT MARKING
- (R) PAVEMENT MARKING REMOVAL
- (1) TEMP PVT MK - LINE 4": 9' SKIP, 3' DASH WHITE
- (2) TEMP PVT MK - LINE 4": SOLID WHITE
- (3) TEMP PVT MK - LINE 4": SOLID YELLOW
- (4) TEMP PVT MK - LINE 5": 30' SKIP, 10' DASH WHITE
- (5) TEMP PVT MK - LINE 8": SOLID WHITE
- (6) TEMP PVT MK - LINE 12": SOLID WHITE, CHEVRONS AT 30'
- (7) TEMP PVT MK - LINE 4": 30' SKIP, 10' DASH WHITE
- (8) TEMP PVT MK - LINE 4": SOLID DOUBLE YELLOW 11" C-C
- (9) TEMP PVT MK - LINE 6": SOLID WHITE
- (10) TEMP PVT MK - LINE 24": SOLID WHITE
- (11) TEMP PVT MK - LINE 24": WHITE LETTERS AND SYMBOLS
- (12) TEMP PVT MK - LINE 12": SOLID YELLOW
- (13) TEMP PVT MK - LINE 4": 6' SKIP, 2' DASH WHITE

TEMPORARY PAVEMENT MARKING TYPES:
I-80 AND RAMPS - EPOXY
CHICAGO STREET - WINTER - EPOXY
CHICAGO STREET - NON-WINTER - TYPE IV TAPE

WORK ZONE

TEMPORARY PAVEMENT (ACTIVELY CONSTRUCTING)

TEMPORARY PAVEMENT (PREVIOUSLY CONSTRUCTED)

TEMPORARY TYPE II BARRICADE OR DRUM
I-80 AND RAMPS: 100' C-C TANGENTS, 50' ON TAPERS
25' ON RAMPS
CHICAGO STREET: 50' C-C TANGENTS, 25' ON TAPERS
DEVICE LIGHTS SHOULD BE INSTALLED PER STANDARD SPECIAL PROVISION SECTION 701.16

TEMPORARY CONCRETE BARRIER WITH TYPE C REFLECTORS PER STANDARDS 704001 AND 782006 AND PINNING AS DETAILED IN THE MOT NOTES, SCHEDULE OR PLAN

TEMPORARY CONCRETE BARRIER WITH GLARE SCREEN

EXISTING GUARDRAIL

NOTES:
1. TRAFFIC CONTROL PLANS SHOW HMA TEMPORARY PAVEMENT OPTION AS VISUAL ONLY. SEE ROADWAY TYPICAL SECTIONS FOR TEMPORARY PAVEMENT STRUCTURE OPTIONS.

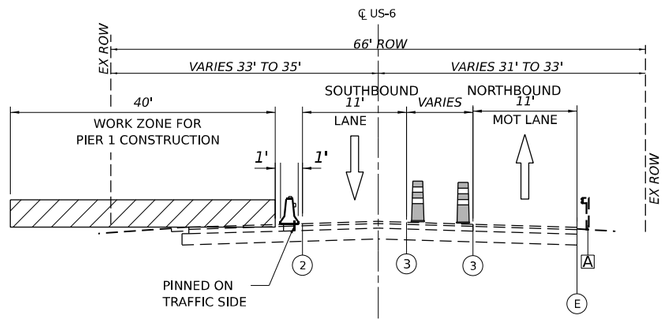

PR US-6 MOT TYPICAL SECTION
PIER CONSTRUCTION

STA 218+03 TO 220+45.00

A STA 215+72.33 TO 218+12.18

LEGEND

- (E) EXISTING PAVEMENT MARKING
- (P) PERMANENT PAVEMENT MARKING
- (R) PAVEMENT MARKING REMOVAL
- (1) TEMP PVT MK - LINE 4" - TYPE IV TAPE: 6' SKIP, 2' DASH WHITE
- (2) TEMP PVT MK - LINE 4" - TYPE IV TAPE: SOLID WHITE
- (3) TEMP PVT MK - LINE 4" - TYPE IV TAPE: SOLID YELLOW
- (4) TEMP PVT MK - LINE 5" - TYPE IV TAPE: 30' SKIP, 10' DASH WHITE
- (5) TEMP PVT MK - LINE 8" - TYPE IV TAPE: SOLID WHITE
- (6) TEMP PVT MK - LINE 12" - TYPE IV TAPE: SOLID WHITE
- (7) TEMP PVT MK - LINE 4" - TYPE IV TAPE: 30' SKIP, 10' DASH WHITE
- (8) TEMP PVT MK - LINE 4" - TYPE IV TAPE: SOLID DOUBLE YELLOW
- (9) TEMP PVT MK - LINE 6" - TYPE IV TAPE: SOLID WHITE
- (10) TEMP PVT MK - LINE 24" - TYPE IV TAPE: SOLID WHITE
- (11) TEMP PVT MK - LINE 24" - TYPE IV TAPE: WHITE LETTERS AND SYMBOLS
- (12) TEMP PVT MK - LINE 12" - TYPE IV TAPE: SOLID YELLOW
- (13) TEMP PVT MK - LINE 4" - TYPE IV TAPE: 6' SKIP, 2' DASH WHITE

WORK ZONE

TEMPORARY PAVEMENT (ACTIVELY CONSTRUCTING)

TEMPORARY PAVEMENT (PREVIOUSLY CONSTRUCTED)

TYPE II BARRICADE OR DRUM @ 100 FT C-C ALONG ROADWAY (TANGENT), 50 FT C-C ALONG TAPERS AND RAMPS

TEMPORARY CONCRETE BARRIER WITH TYPE C REFLECTORS AND ANCHOR PER STANDARDS 704001 AND 782006

TEMPORARY CONCRETE BARRIER WITH GLARE SCREEN

EXISTING GUARDRAIL

* FROM PREVIOUS STAGE

NOTES:

1. TRAFFIC CONTROL PLANS SHOW HMA TEMPORARY PAVEMENT OPTION AS VISUAL ONLY. SEE ROADWAY TYPICAL SECTIONS FOR TEMPORARY PAVEMENT STRUCTURE OPTIONS.

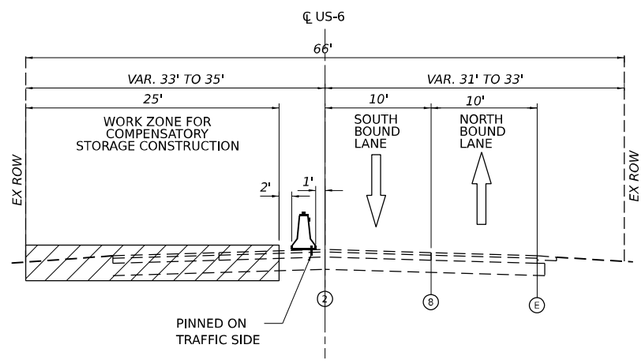

PR US-6 MOT TYPICAL SECTION
COMPENSATORY STORAGE CONSTRUCTION

STA 226+22.00 TO 232+88.00

LEGEND

- (E) EXISTING PAVEMENT MARKING
- (P) PERMANENT PAVEMENT MARKING
- (R) PAVEMENT MARKING REMOVAL
- (1) TEMP PVT MK - LINE 4" - TYPE IV TAPE: 6' SKIP, 2' DASH WHITE
- (2) TEMP PVT MK - LINE 4" - TYPE IV TAPE: SOLID WHITE
- (3) TEMP PVT MK - LINE 4" - TYPE IV TAPE: SOLID YELLOW
- (4) TEMP PVT MK - LINE 5" - TYPE IV TAPE: 30' SKIP, 10' DASH WHITE
- (5) TEMP PVT MK - LINE 8" - TYPE IV TAPE: SOLID WHITE
- (6) TEMP PVT MK - LINE 12" - TYPE IV TAPE: SOLID WHITE
- (7) TEMP PVT MK - LINE 4" - TYPE IV TAPE: 30' SKIP, 10' DASH WHITE
- (8) TEMP PVT MK - LINE 4" - TYPE IV TAPE: SOLID DOUBLE YELLOW
- (9) TEMP PVT MK - LINE 6" - TYPE IV TAPE: SOLID WHITE
- (10) TEMP PVT MK - LINE 24" - TYPE IV TAPE: SOLID WHITE
- (11) TEMP PVT MK - LINE 24" - TYPE IV TAPE: WHITE LETTERS AND SYMBOLS
- (12) TEMP PVT MK - LINE 12" - TYPE IV TAPE: SOLID YELLOW
- (13) TEMP PVT MK - LINE 4" - TYPE IV TAPE: 6' SKIP, 2' DASH WHITE

WORK ZONE

TEMPORARY PAVEMENT (ACTIVELY CONSTRUCTING)

TEMPORARY PAVEMENT (PREVIOUSLY CONSTRUCTED)

TYPE II BARRICADE OR DRUM @ 100 FT C-C ALONG ROADWAY (TANGENT), 50 FT C-C ALONG TAPERS AND RAMPS

TEMPORARY CONCRETE BARRIER WITH TYPE C REFLECTORS AND ANCHOR PER STANDARDS 704001 AND 782006

TEMPORARY CONCRETE BARRIER WITH GLARE SCREEN

EXISTING GUARDRAIL

* FROM PREVIOUS STAGE

NOTES:

1. TRAFFIC CONTROL PLANS SHOW HMA TEMPORARY PAVEMENT OPTION AS VISUAL ONLY. SEE ROADWAY TYPICAL SECTIONS FOR TEMPORARY PAVEMENT STRUCTURE OPTIONS.

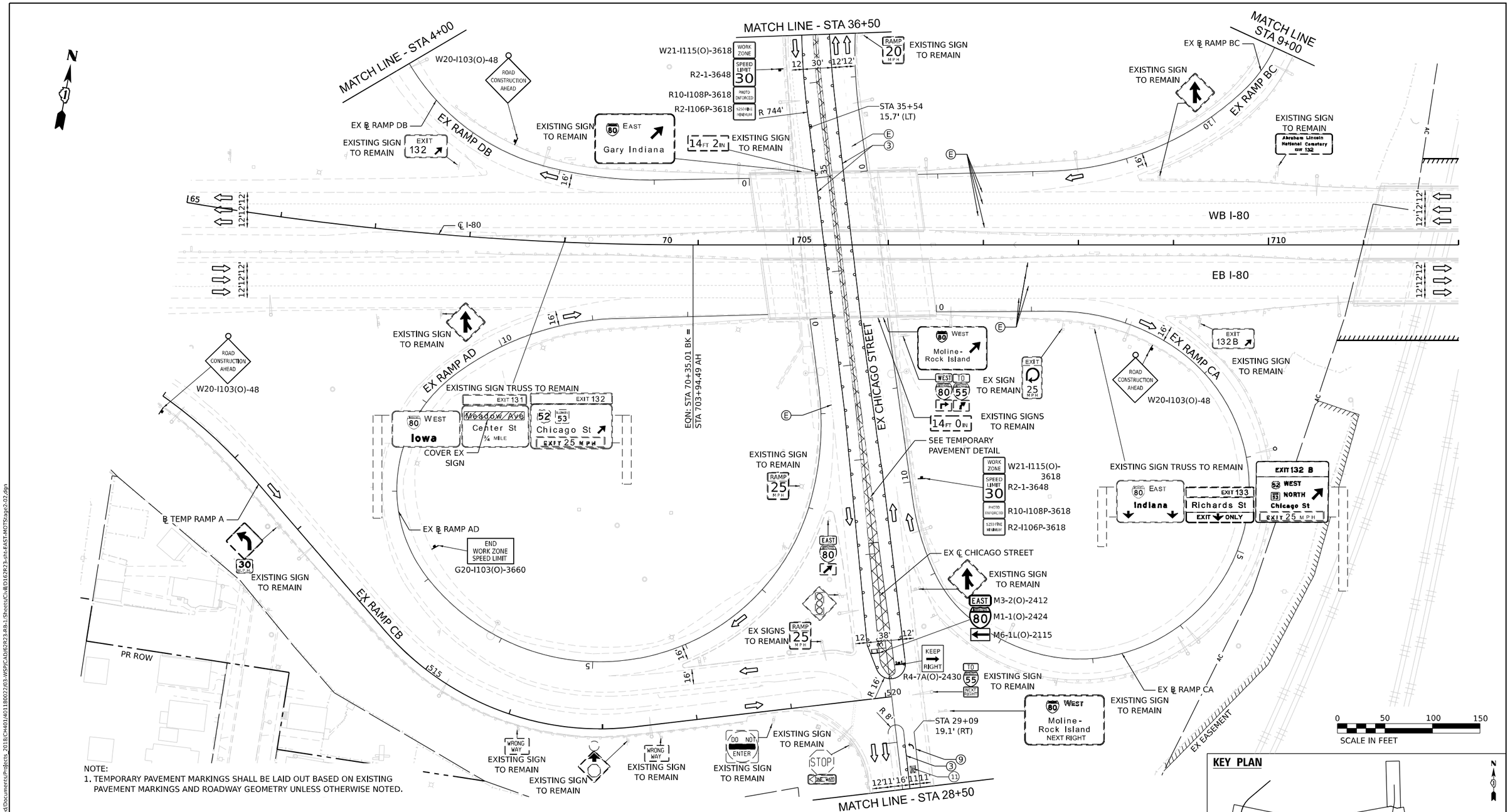

NOTE:
1. TEMPORARY PAVEMENT MARKINGS SHALL BE LAID OUT BASED ON EXISTING PAVEMENT MARKINGS AND ROADWAY GEOMETRY UNLESS OTHERWISE NOTED.

LEGEND

- WORK ZONE
- PAVEMENT CONSTRUCTED IN PREVIOUS STAGE
- TEMPORARY PAVEMENT (PREVIOUSLY CONSTRUCTED)
- TEMPORARY PAVEMENT (ACTIVELY CONSTRUCTING)
- TEMPORARY CONCRETE BARRIER OR RELOCATE TEMPORARY CONCRETE BARRIER
- I-80 AND RAMPS: 100' C-C TANGENTS, 50' ON TAPERS, 25' ON RAMPS
- CHICAGO STREET: 50' C-C TANGENTS, 25' ON TAPERS
- TEMPORARY IMPACT ATTENUATOR
- TYPE III BARRICADE
- DIRECTION OF TRAFFIC
- ARROW BOARD
- TEMPORARY TRAFFIC CONTROL SIGN AND SUPPORT
- FROM PREVIOUS STAGE
- DIRECTIONAL INDICATOR BARRICADE WITH STEADY BURN MONODIRECTIONAL LIGHT

(E) EXISTING PAVEMENT MARKINGS
(R) PAVEMENT MARKING REMOVAL
(1) TEMP PVT MK - LINE 8": 9' SKIP, 3' DASH WHITE
(2) TEMP PVT MK - LINE 4": SOLID WHITE
(3) TEMP PVT MK - LINE 4": SOLID YELLOW
(4) TEMP PVT MK - LINE 5": 30' SKIP, 10' DASH WHITE
(5) TEMP PVT MK - LINE 8": SOLID WHITE
(6) TEMP PVT MK - LINE 12": SOLID WHITE, CHEVRONS AT 30'
(7) TEMP PVT MK - LINE 4": 30' SKIP, 10' DASH WHITE
(8) TEMP PVT MK - LINE 4": SOLID DOUBLE YELLOW 11" C-C
(9) TEMP PVT MK - LINE 6": SOLID WHITE
(10) TEMP PVT MK - LINE 24": SOLID WHITE
(11) TEMP PVT MK: WHITE LETTERS AND SYMBOLS
(12) TEMP PVT MK - LINE 12": SOLID YELLOW, SPACING PER STANDARD D1 TC-13
(13) TEMP PVT MK - LINE 4": 6' SKIP, 2' DASH WHITE
(14) TEMP PVT MK - LINE 6": 6' SKIP, 2' DASH WHITE

NOTE:
REFER TO PROPOSED TYPICAL SECTIONS FOR TEMPORARY PAVEMENT MARKING MATERIALS.

BURNS McDONNELL

USER NAME = USGP718052	DESIGNED - JAP	REVISED -	
	DRAWN - TMM	REVISED -	
PLOT SCALE = 100.000 ' / in.	CHECKED - JIR	REVISED -	
PLOT DATE = 11/6/2025	DATE - 11/7/2025	REVISED -	

STATE OF ILLINOIS
DEPARTMENT OF TRANSPORTATION

SUGGESTED STAGES OF CONSTRUCTION AND TRAFFIC CONTROL
STAGE 2

SCALE: 1" = 50' | SHEET 2 OF 6 SHEETS | STA. TO STA.

F.A.I. RTE.	SECTION	COUNTY	TOTAL SHEETS	SHEET NO.
80	FAI 80 21 STRUCTURE 2	WILL	1230	185
		CONTRACT NO. 62R23		
		ILLINOIS FED. AID PROJECT		

MODEL: Default
FILE NAME: pw://transystems-pw.bentley.com:transyscorp-pw1-hosted/Documents/Projects_2018/CH401/401180022/03-WSP/CAD/62R23-RB-1/Sheets/Civil/0162R23-sht-EAST-MOTStage2-02.dgn

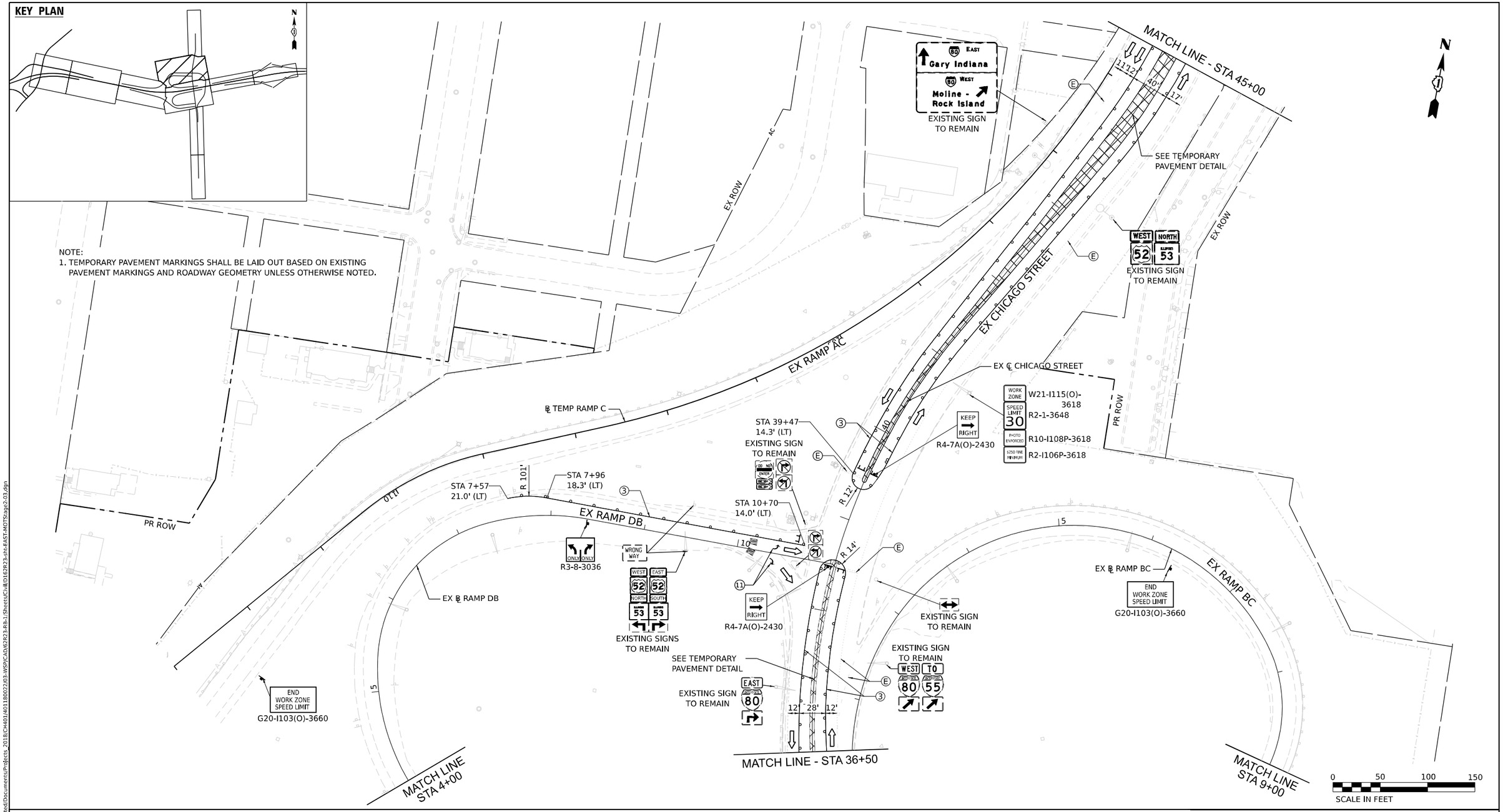

LEGEND

- WORK ZONE
- PAVEMENT CONSTRUCTED IN PREVIOUS STAGE
- TEMPORARY PAVEMENT (PREVIOUSLY CONSTRUCTED)
- TEMPORARY PAVEMENT (ACTIVELY CONSTRUCTING)
- TEMPORARY CONCRETE BARRIER OR RELOCATE TEMPORARY CONCRETE BARRIER
- I-80 AND RAMPS: 100' C-C TANGENTS, 50' ON TAPERS, 25' ON RAMPS
- CHICAGO STREET: 50' C-C TANGENTS, 25' ON TAPERS
- TEMPORARY IMPACT ATTENUATOR
- TYPE III BARRICADE
- DIRECTION OF TRAFFIC
- ARROW BOARD
- TEMPORARY TRAFFIC CONTROL SIGN AND SUPPORT
- FROM PREVIOUS STAGE
- DIRECTIONAL INDICATOR BARRICADE WITH STEADY BURN MONODIRECTIONAL LIGHT

(E) EXISTING PAVEMENT MARKINGS
(R) PAVEMENT MARKING REMOVAL
(1) TEMP PVT MK - LINE 8": 9' SKIP, 3' DASH WHITE
(2) TEMP PVT MK - LINE 4": SOLID WHITE
(3) TEMP PVT MK - LINE 4": SOLID YELLOW
(4) TEMP PVT MK - LINE 5": 30' SKIP, 10' DASH WHITE
(5) TEMP PVT MK - LINE 8": SOLID WHITE
(6) TEMP PVT MK - LINE 12": SOLID WHITE, CHEVRONS AT 30'
(7) TEMP PVT MK - LINE 4": 30' SKIP, 10' DASH WHITE
(8) TEMP PVT MK - LINE 4": SOLID DOUBLE YELLOW 11" C-C
(9) TEMP PVT MK - LINE 6": SOLID WHITE
(10) TEMP PVT MK - LINE 24": SOLID WHITE
(11) TEMP PVT MK: WHITE LETTERS AND SYMBOLS
(12) TEMP PVT MK - LINE 12": SOLID YELLOW, SPACING PER STANDARD D1 TC-13
(13) TEMP PVT MK - LINE 4": 6' SKIP, 2' DASH WHITE
(14) TEMP PVT MK - LINE 6": 6' SKIP, 2' DASH WHITE

NOTE:
REFER TO PROPOSED TYPICAL SECTIONS FOR TEMPORARY PAVEMENT MARKING MATERIALS.

MODEL: Default
FILE NAME: pw://transystems-pw.bentley.com:transyscorp-pw1-hosted/Documents/Projects_2018/CH401/401180022/03-WSP/CAD/62R23-RB-1/Sheets/Civil/0162R23-sht-EAST-MOTStage2-03.dgn

BURNS McDONNELL

USER NAME = USGP718052	DESIGNED - JAP	REVISED -	
	DRAWN - TMM	REVISED -	
PLOT SCALE = 100.000 ' / in.	CHECKED - JJR	REVISED -	
PLOT DATE = 11/6/2025	DATE - 11/7/2025	REVISED -	

STATE OF ILLINOIS
DEPARTMENT OF TRANSPORTATION

SUGGESTED STAGES OF CONSTRUCTION AND TRAFFIC CONTROL
STAGE 2

SCALE: 1" = 50' | SHEET 3 OF 6 SHEETS | STA. TO STA.

F.A.I. RTE.	SECTION	COUNTY	TOTAL SHEETS	SHEET NO.
80	FAI 80 21 STRUCTURE 2	WILL	1230	186
		CONTRACT NO. 62R23		
	ILLINOIS	FED. AID PROJECT		

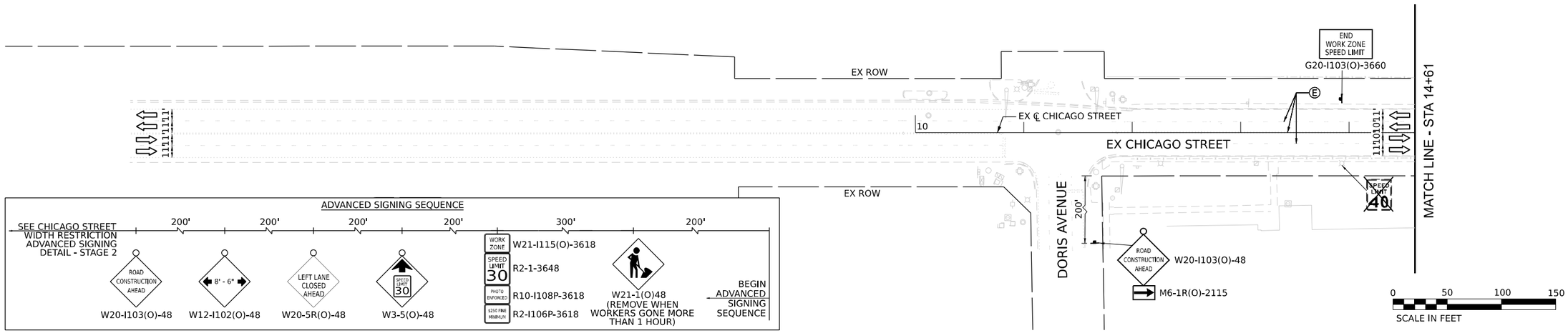

NOTE:
1. TEMPORARY PAVEMENT MARKINGS SHALL BE LAID OUT BASED ON EXISTING PAVEMENT MARKINGS AND ROADWAY GEOMETRY UNLESS OTHERWISE NOTED.
2. MOT SIGNING IN CONFLICT WITH EXISTING RETAINING WALLS SHALL BE PLACED ON TOP OF THE RETAINING WALL WITH SHORTER POSTS TO THE SATISFACTION OF THE ENGINEER. SHRUBS AND OVERHANGING LIMBS SHALL BE CLEARED AS NECESSARY TO NOT OBSTRUCT THE VIEW OF THE MOT SIGNING.

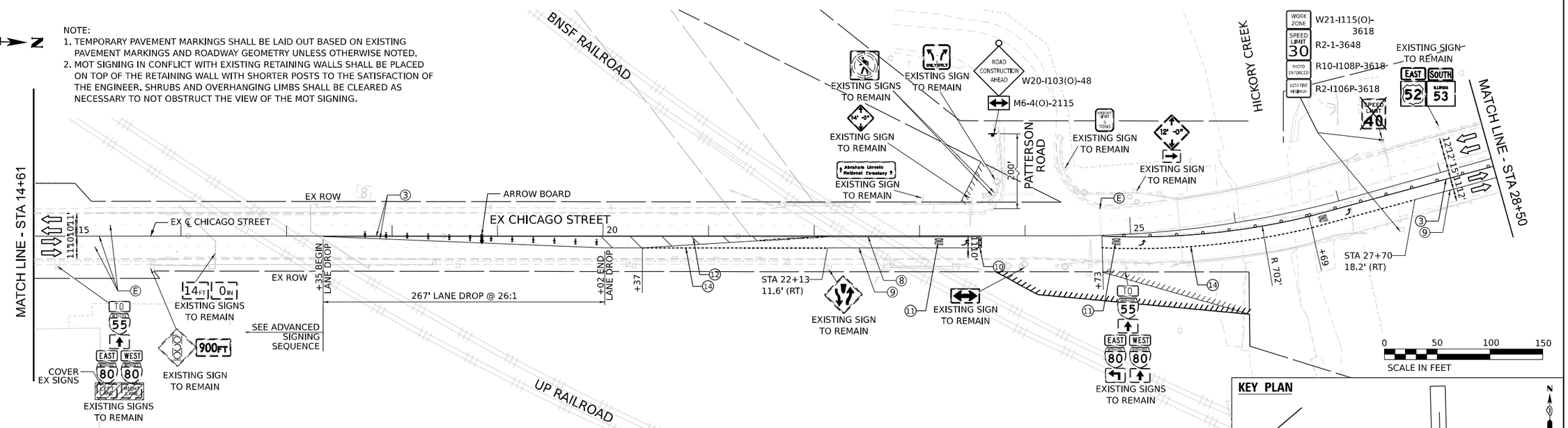

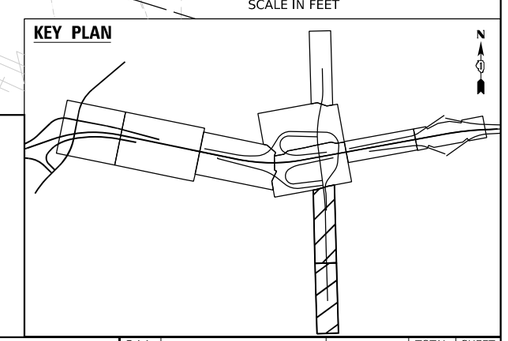

LEGEND

- WORK ZONE
- PAVEMENT CONSTRUCTED IN PREVIOUS STAGE
- TEMPORARY PAVEMENT (PREVIOUSLY CONSTRUCTED)
- TEMPORARY PAVEMENT (ACTIVELY CONSTRUCTING)
- TEMPORARY CONCRETE BARRIER OR RELOCATE TEMPORARY CONCRETE BARRIER
  I-80 AND RAMPS: 100' C-C TANGENTS, 50' ON TAPERS, 25' ON RAMPS
  CHICAGO STREET: 50' C-C TANGENTS, 25' ON TAPERS
- TEMPORARY IMPACT ATTENUATOR
- TYPE III BARRICADE
- DIRECTION OF TRAFFIC
- ARROW BOARD
- TEMPORARY TRAFFIC CONTROL SIGN AND SUPPORT
- FROM PREVIOUS STAGE
- DIRECTIONAL INDICATOR BARRICADE WITH STEADY BURN MONODIRECTIONAL LIGHT

(E) EXISTING PAVEMENT MARKINGS
(R) PAVEMENT MARKING REMOVAL
(1) TEMP PVT MK - LINE 8": 9' SKIP, 3' DASH WHITE
(2) TEMP PVT MK - LINE 4": SOLID WHITE
(3) TEMP PVT MK - LINE 4": SOLID YELLOW
(4) TEMP PVT MK - LINE 5": 30' SKIP, 10' DASH WHITE
(5) TEMP PVT MK - LINE 8": SOLID WHITE
(6) TEMP PVT MK - LINE 12": SOLID WHITE, CHEVRONS AT 30'
(7) TEMP PVT MK - LINE 4": 30' SKIP, 10' DASH WHITE
(8) TEMP PVT MK - LINE 4": SOLID DOUBLE YELLOW 11" C-C
(9) TEMP PVT MK - LINE 6": SOLID WHITE
(10) TEMP PVT MK - LINE 24": SOLID WHITE
(11) TEMP PVT MK: WHITE LETTERS AND SYMBOLS
(12) TEMP PVT MK - LINE 12": SOLID YELLOW, SPACING PER STANDARD D1 TC-13
(13) TEMP PVT MK - LINE 4": 6' SKIP, 2' DASH WHITE
(14) TEMP PVT MK - LINE 6": 6' SKIP, 2' DASH WHITE

NOTE:
REFER TO PROPOSED TYPICAL SECTIONS FOR TEMPORARY PAVEMENT MARKING MATERIALS.

MODEL: Default
FILE NAME: pw://transystems-pw.bentley.com:transyscorp-pw1-hosted/Documents/Projects_2018/CH401/401180022/03-WSP/CAD/62R23-Rb-1/Sheets/Civil/D162R23-sh1-EAST-MOTStage2-05.dgn

BURNS McDONNELL

USER NAME = USGP718052	DESIGNED - JAP	REVISED -	
	DRAWN - TMM	REVISED -	
PLOT SCALE = 100.000 ' / in.	CHECKED - JIR	REVISED -	
PLOT DATE = 11/6/2025	DATE - 11/7/2025	REVISED -	

STATE OF ILLINOIS
DEPARTMENT OF TRANSPORTATION

SUGGESTED STAGES OF CONSTRUCTION AND TRAFFIC CONTROL
STAGE 2

SCALE: 1" = 50' | SHEET 5 OF 6 SHEETS | STA. TO STA.

F.A.I. RTE.	SECTION	COUNTY	TOTAL SHEETS	SHEET NO.
80	FAI 80 21 STRUCTURE 2	WILL	1230	187
		CONTRACT NO. 62R23		
	ILLINOIS	FED. AID PROJECT		

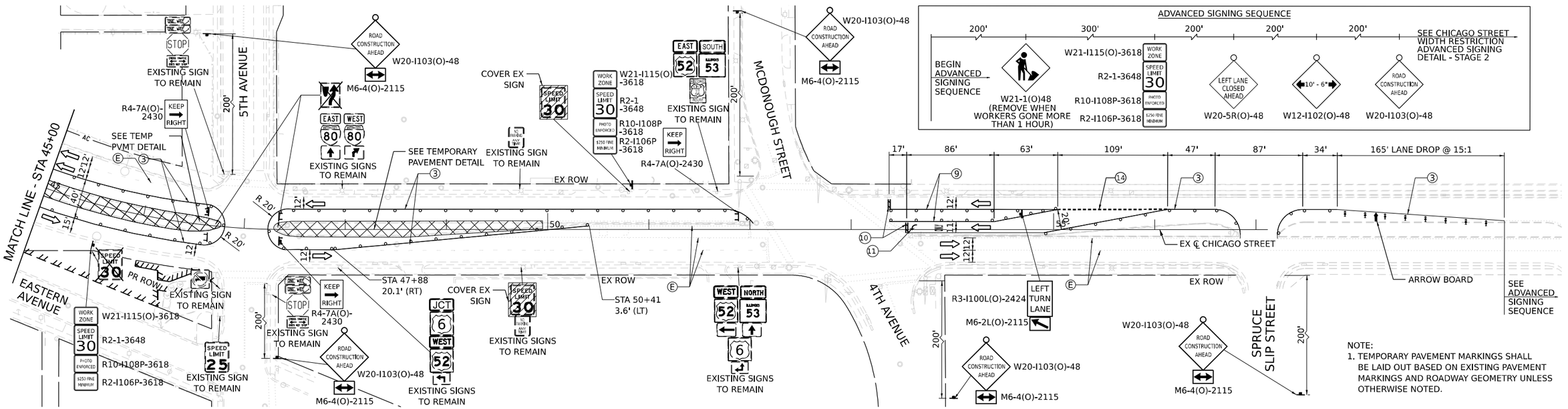

NOTE:
1. TEMPORARY PAVEMENT MARKINGS SHALL BE LAID OUT BASED ON EXISTING PAVEMENT MARKINGS AND ROADWAY GEOMETRY UNLESS OTHERWISE NOTED.

0 50 100 150
SCALE IN FEET

KEY PLAN

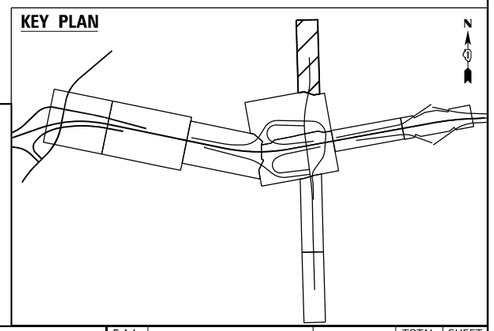

LEGEND

- WORK ZONE
- PAVEMENT CONSTRUCTED IN PREVIOUS STAGE
- TEMPORARY PAVEMENT (PREVIOUSLY CONSTRUCTED)
- TEMPORARY PAVEMENT (ACTIVELY CONSTRUCTING)
- TEMPORARY CONCRETE BARRIER OR RELOCATE TEMPORARY CONCRETE BARRIER
- I-80 AND RAMPS: 100' C-C TANGENTS, 50' ON TAPERS, 25' ON RAMPS
  CHICAGO STREET: 50' C-C TANGENTS, 25' ON TAPERS
- TEMPORARY IMPACT ATTENUATOR
- TYPE III BARRICADE
- DIRECTION OF TRAFFIC
- ARROW BOARD
- TEMPORARY TRAFFIC CONTROL SIGN AND SUPPORT
- FROM PREVIOUS STAGE
- DIRECTIONAL INDICATOR BARRICADE WITH STEADY BURN MONODIRECTIONAL LIGHT

(E) EXISTING PAVEMENT MARKINGS
(R) PAVEMENT MARKING REMOVAL
(1) TEMP PVT MK - LINE 8": 9' SKIP, 3' DASH WHITE
(2) TEMP PVT MK - LINE 4": SOLID WHITE
(3) TEMP PVT MK - LINE 4": SOLID YELLOW
(4) TEMP PVT MK - LINE 5": 30' SKIP, 10' DASH WHITE
(5) TEMP PVT MK - LINE 8": SOLID WHITE
(6) TEMP PVT MK - LINE 12": SOLID WHITE, CHEVRONS AT 30'
(7) TEMP PVT MK - LINE 4": 30' SKIP, 10' DASH WHITE
(8) TEMP PVT MK - LINE 4": SOLID DOUBLE YELLOW 11" C-C
(9) TEMP PVT MK - LINE 6": SOLID WHITE
(10) TEMP PVT MK - LINE 24": SOLID WHITE
(11) TEMP PVT MK: WHITE LETTERS AND SYMBOLS
(12) TEMP PVT MK - LINE 12": SOLID YELLOW, SPACING PER STANDARD D1 TC-13
(13) TEMP PVT MK - LINE 4": 6' SKIP, 2' DASH WHITE
(14) TEMP PVT MK - LINE 6": 6' SKIP, 2' DASH WHITE

NOTE:
REFER TO PROPOSED TYPICAL SECTIONS FOR TEMPORARY PAVEMENT MARKING MATERIALS.

MODEL: Default
FILE NAME: pw://transystems-pw.bentley.com:transyscorp-pw1-hosted/Documents/Projects_2018/CH401/401180022/03-WSP/CAD/62R23-RB-1/Sheets/Civil/D162R23-sht-EAST-MOTStage2-06.dgn

BURNS McDONNELL

USER NAME = USGP718052	DESIGNED - JAP	REVISED -	
	DRAWN - TMM	REVISED -	
PLOT SCALE = 100.000 ' / in.	CHECKED - JIR	REVISED -	
PLOT DATE = 11/6/2025	DATE - 11/7/2025	REVISED -	

STATE OF ILLINOIS
DEPARTMENT OF TRANSPORTATION

SUGGESTED STAGES OF CONSTRUCTION AND TRAFFIC CONTROL
STAGE 2

SCALE: 1" = 50' | SHEET 6 OF 6 SHEETS | STA. TO STA.

F.A.I. RTE.	SECTION	COUNTY	TOTAL SHEETS	SHEET NO.
80	FAI 80 21 STRUCTURE 2	WILL	1230	188
		CONTRACT NO. 62R23		
	ILLINOIS	FED. AID PROJECT		

NOTES:
1. UNLESS NOTED OTHERWISE, ALL STATIONS AND OFFSETS ARE TAKEN FROM PR CL I-80 OR PR CL I-80 RAMPS.
2. STAGE 3 TRAFFIC TO COORDINATE WITH ADJACENT CONTRACT 62R22 TRAFFIC STAGING TO THE WEST.
3. TEMPORARY SIGNS ON THE DES PLAINES RIVER BRIDGE SHALL BE MOUNTED TO EXISTING LIGHT POLES.
4. MAINTENANCE OF TRAFFIC ON THIS SHEET IS PROVIDED BY 62R22

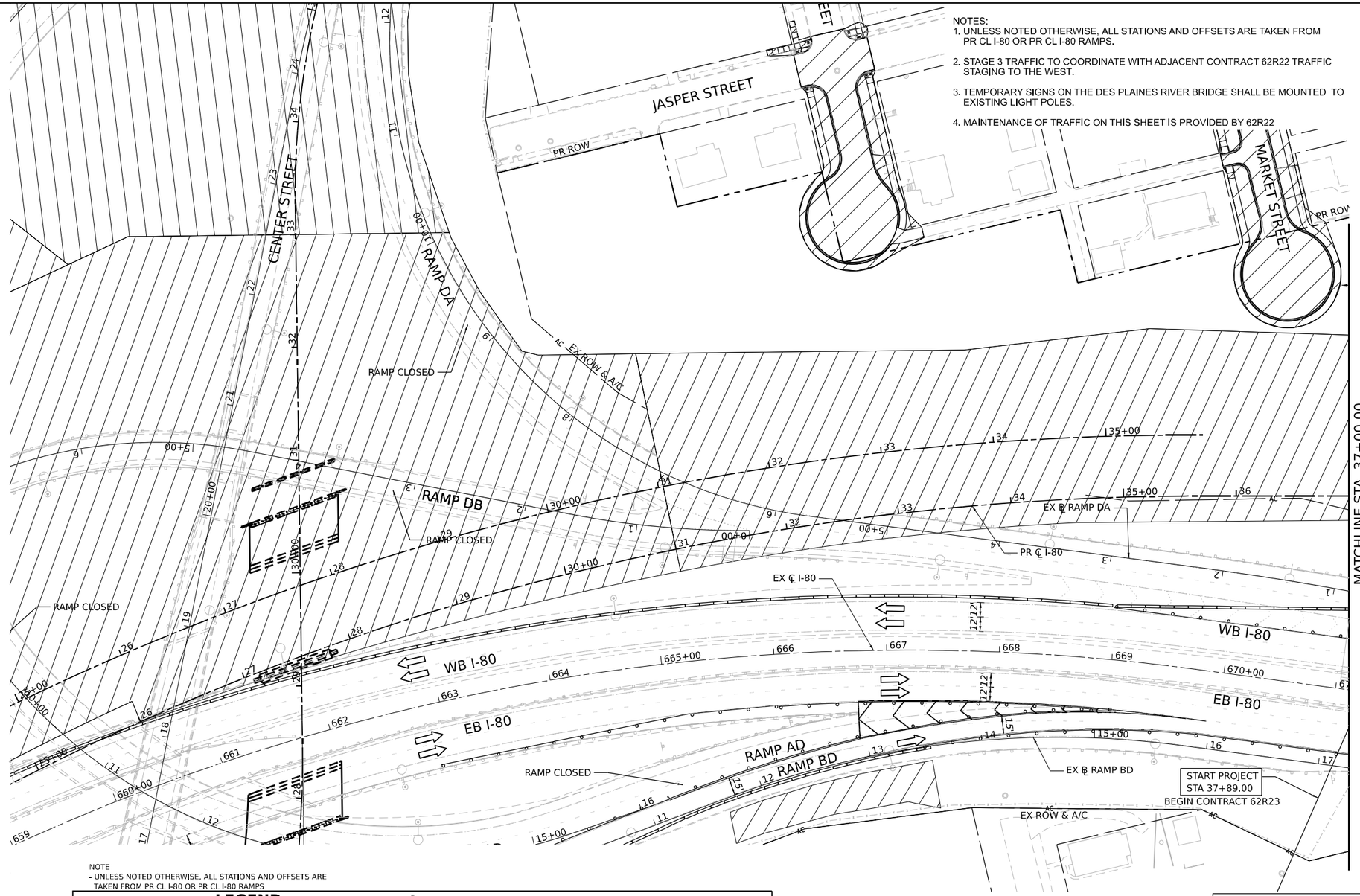

NOTE
- UNLESS NOTED OTHERWISE, ALL STATIONS AND OFFSETS ARE TAKEN FROM PR CL I-80 OR PR CL I-80 RAMPS

LEGEND

- WORK ZONE
- PAVEMENT CONSTRUCTED IN PREVIOUS STAGE
- TEMPORARY PAVEMENT (PREVIOUSLY CONSTRUCTED)
- TEMPORARY PAVEMENT (ACTIVELY CONSTRUCTING)
- TEMPORARY CONCRETE BARRIER OR RELOCATE TEMPORARY CONCRETE BARRIER
- TYPE II BARRICADE, DRUM, OR VERTICAL BARRICADE WITH STEADY BURN MONODIRECTIONAL LIGHT @ 100 FT C-C ALONG ROADWAY (TANGENT), 50 FT CENTERS ALONG TAPERS AND RAMPS
- TEMPORARY IMPACT ATTENUATOR
- DIRECTIONAL INDICATOR BARRICADE WITH STEADY BURN MONODIRECTIONAL LIGHT
- TYPE III BARRICADE
- DIRECTION OF TRAFFIC
- ARROW BOARD

* FROM PREVIOUS STAGE

- TEMPORARY TRAFFIC CONTROL SIGN AND SUPPORT

(E) EXISTING PAVEMENT MARKINGS
(R) PAVEMENT MARKING REMOVAL
(1) TEMP PVT MK - LINE 8" - EPOXY: 9' SKIP, 3' DASH WHITE
(2) TEMP PVT MK - LINE 4" - EPOXY: SOLID WHITE
(3) TEMP PVT MK - LINE 4" - EPOXY: SOLID YELLOW
(4) TEMP PVT MK - LINE 5" - EPOXY: 30' SKIP, 10' DASH WHITE
(5) TEMP PVT MK - LINE 8" - EPOXY: SOLID WHITE
(6) TEMP PVT MK - LINE 12" - EPOXY: SOLID WHITE
(7) TEMP PVT MK - LINE 4" - EPOXY: 30' SKIP, 10' DASH WHITE
(8) TEMP PVT MK - LINE 4" - EPOXY: SOLID DOUBLE YELLOW
(9) TEMP PVT MK - LINE 6" - EPOXY: SOLID WHITE
(10) TEMP PVT MK - LINE 24" - EPOXY: SOLID WHITE
(11) TEMP PVT MK - LINE 24" - EPOXY: WHITE LETTERS AND SYMBOLS
(12) TEMP PVT MK - LINE 12" - EPOXY: SOLID YELLOW
(13) TEMP PVT MK - LINE 4" - EPOXY: 6' SKIP, 2' DASH WHITE

N

0 50 100 150
SCALE IN FEET

KEY PLAN

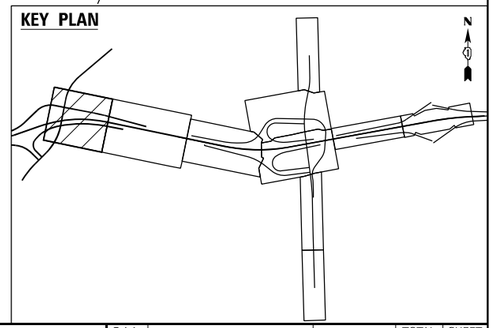

MODEL: Default
FILE NAME: pw://transystems-pw.bentley.com:transyscorp-pw1-hosted/Documents/Projects_2018/CH401/401180022/03-WSP/CAD/62R23-RB-1/Sheets/Civil/D162R23-cht-staging3-1

WSP USA Inc.
30 N. LASALLE STREET
SUITE 4200
CHICAGO, IL 60602
TEL: (312) 782-8150

USER NAME = USGP718052	DESIGNED - HA	REVISED -	
	DRAWN - HA	REVISED -	
PLOT SCALE = 100.000 ' / in.	CHECKED - SW	REVISED -	
PLOT DATE = 11/6/2025	DATE - 11/7/2025	REVISED -	

STATE OF ILLINOIS
DEPARTMENT OF TRANSPORTATION

SUGGESTED STAGES OF CONSTRUCTION AND TRAFFIC CONTROL
STAGE 3

SCALE: 1" = 50' | SHEET OF SHEETS | STA. TO STA.

F.A.I. RTE.	SECTION	COUNTY	TOTAL SHEETS	SHEET NO.
80	FAI 80 21 STRUCTURE 2	WILL	1230	189
		CONTRACT NO. 62R23		
	ILLINOIS	FED. AID PROJECT		

NOTES:
1. UNLESS NOTED OTHERWISE, ALL STATIONS AND OFFSETS ARE TAKEN FROM PR CL I-80 OR PR CL I-80 RAMPS.
2. STAGE 3 TRAFFIC TO COORDINATE WITH ADJACENT CONTRACT 62R22 TRAFFIC STAGING TO THE WEST.
3. TEMPORARY SIGNS ON THE DES PLAINES RIVER BRIDGE SHALL BE MOUNTED EXISTING LIGHT POLES.

LEGEND

- WORK ZONE
- PAVEMENT CONSTRUCTED IN PREVIOUS STAGE
- TEMPORARY PAVEMENT (PREVIOUSLY CONSTRUCTED)
- TEMPORARY PAVEMENT (ACTIVELY CONSTRUCTING)
- TEMPORARY CONCRETE BARRIER OR RELOCATE TEMPORARY CONCRETE BARRIER
- TYPE II BARRICADE, DRUM, OR VERTICAL BARRICADE WITH STEADY BURN MONODIRECTIONAL LIGHT @ 100 FT C-C ALONG ROADWAY (TANGENT), 50 FT CENTERS ALONG TAPERS AND RAMPS
- TEMPORARY IMPACT ATTENUATOR
- DIRECTIONAL INDICATOR BARRICADE WITH STEADY BURN MONODIRECTIONAL LIGHT
- TYPE III BARRICADE
- DIRECTION OF TRAFFIC
- ARROW BOARD
- * FROM PREVIOUS STAGE
- TEMPORARY TRAFFIC CONTROL SIGN AND SUPPORT
- (E) EXISTING PAVEMENT MARKINGS
- (R) PAVEMENT MARKING REMOVAL
- (1) TEMP PVT MK - LINE 8" - EPOXY: 9' SKIP, 3' DASH WHITE
- (2) TEMP PVT MK - LINE 4" - EPOXY: SOLID WHITE
- (3) TEMP PVT MK - LINE 4" - EPOXY: SOLID YELLOW
- (4) TEMP PVT MK - LINE 5" - EPOXY: 30' SKIP, 10' DASH WHITE
- (5) TEMP PVT MK - LINE 8" - EPOXY: SOLID WHITE
- (6) TEMP PVT MK - LINE 12" - EPOXY: SOLID WHITE
- (7) TEMP PVT MK - LINE 4" - EPOXY: 30' SKIP, 10' DASH WHITE
- (8) TEMP PVT MK - LINE 4" - EPOXY: SOLID DOUBLE YELLOW
- (9) TEMP PVT MK - LINE 6" - EPOXY: SOLID WHITE
- (10) TEMP PVT MK - LINE 24" - EPOXY: SOLID WHITE
- (11) TEMP PVT MK - LINE 24" - EPOXY: WHITE LETTERS AND SYMBOLS
- (12) TEMP PVT MK - LINE 12" - EPOXY: SOLID YELLOW
- (13) TEMP PVT MK - LINE 4" - EPOXY: 6' SKIP, 2' DASH WHITE

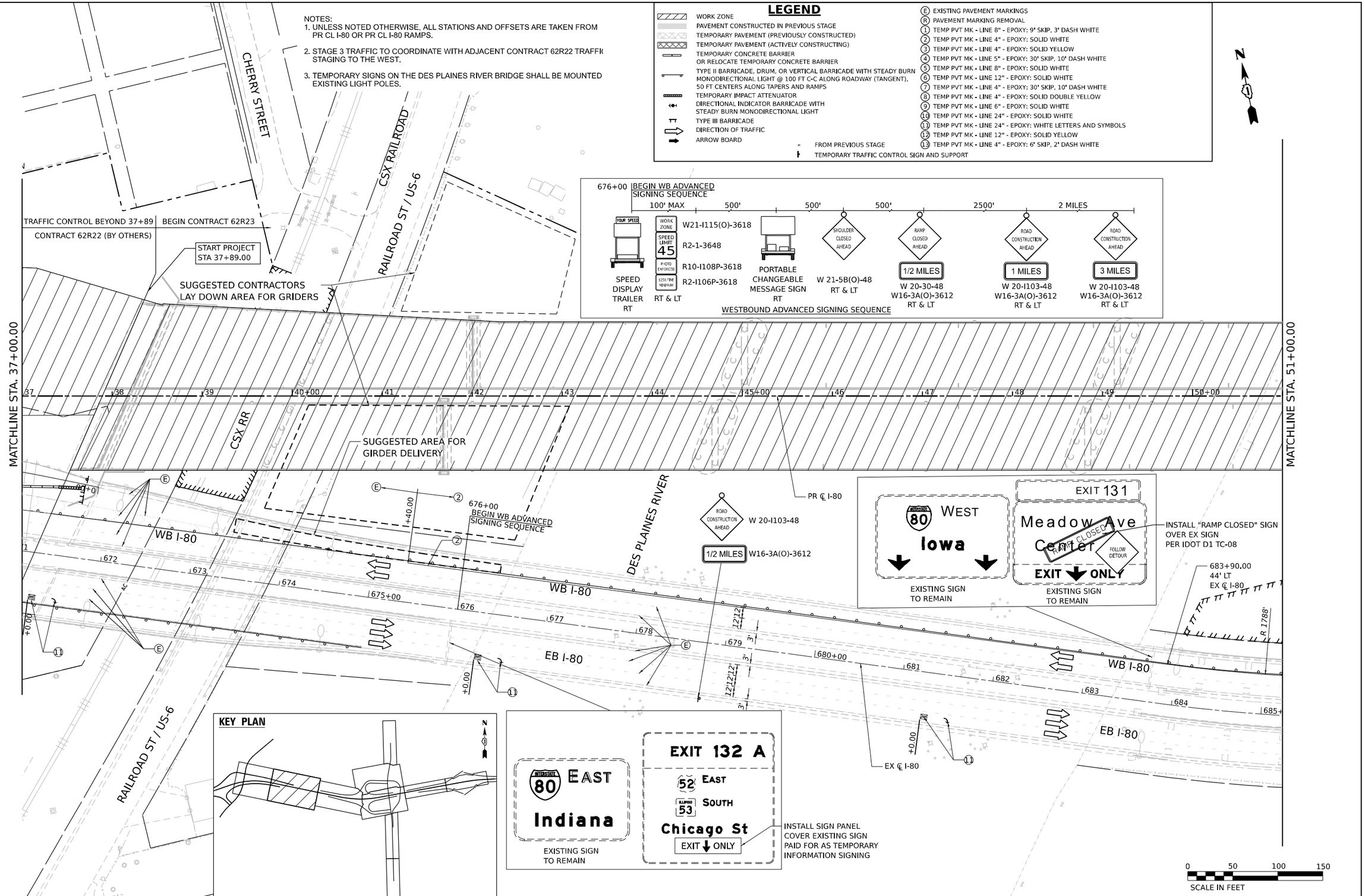

MODEL: Default
FILE NAME: pw://transystems-pw.bentley.com:transyscorp-pw1-hosted/Documents/Projects_2018/CH401/401180022/03-WSP/CAD/62R23-RB-1/Sheets/Civil/D1 62R23-sht-staging3-2

WSP USA Inc.
30 N. LASALLE STREET
SUITE 4200
CHICAGO, IL 60602
TEL: (312) 782-8150

USER NAME = USGP718052	DESIGNED - HA	REVISED -	
	DRAWN - HA	REVISED -	
PLOT SCALE = 100.000 ' / in.	CHECKED - SW	REVISED -	
PLOT DATE = 11/6/2025	DATE - 11/7/2025	REVISED -	

STATE OF ILLINOIS
DEPARTMENT OF TRANSPORTATION

SUGGESTED STAGES OF CONSTRUCTION AND TRAFFIC CONTROL
STAGE 3

SCALE: 1" = 50' | SHEET OF SHEETS | STA. TO STA.

F.A.I. RTE.	SECTION	COUNTY	TOTAL SHEETS	SHEET NO.
80	FAI 80 21 STRUCTURE 2	WILL	1230	190
		CONTRACT NO. 62R23		
	ILLINOIS	FED. AID PROJECT		

NOTES:
1. PAVEMENT MARKINGS TO REMAIN FROM PREVIOUS STAGE UNLESS OTHERWISE NOTED.
2. TEMPORARY SIGNS ON DES PLAINES RIVER BRIDGE SHALL BE MOUNTED TO EXISTING LIGHT POLES OR MOUNTED TO THE OUTSIDE FACE OF THE EXISTING CONCRETE CURB.
3. TEMPORARY PAVEMENT MARKINGS SHALL BE LAID OUT BASED ON EXISTING PAVEMENT. MARKINGS AND ROADWAY GEOMETRY UNLESS OTHERWISE NOTED.

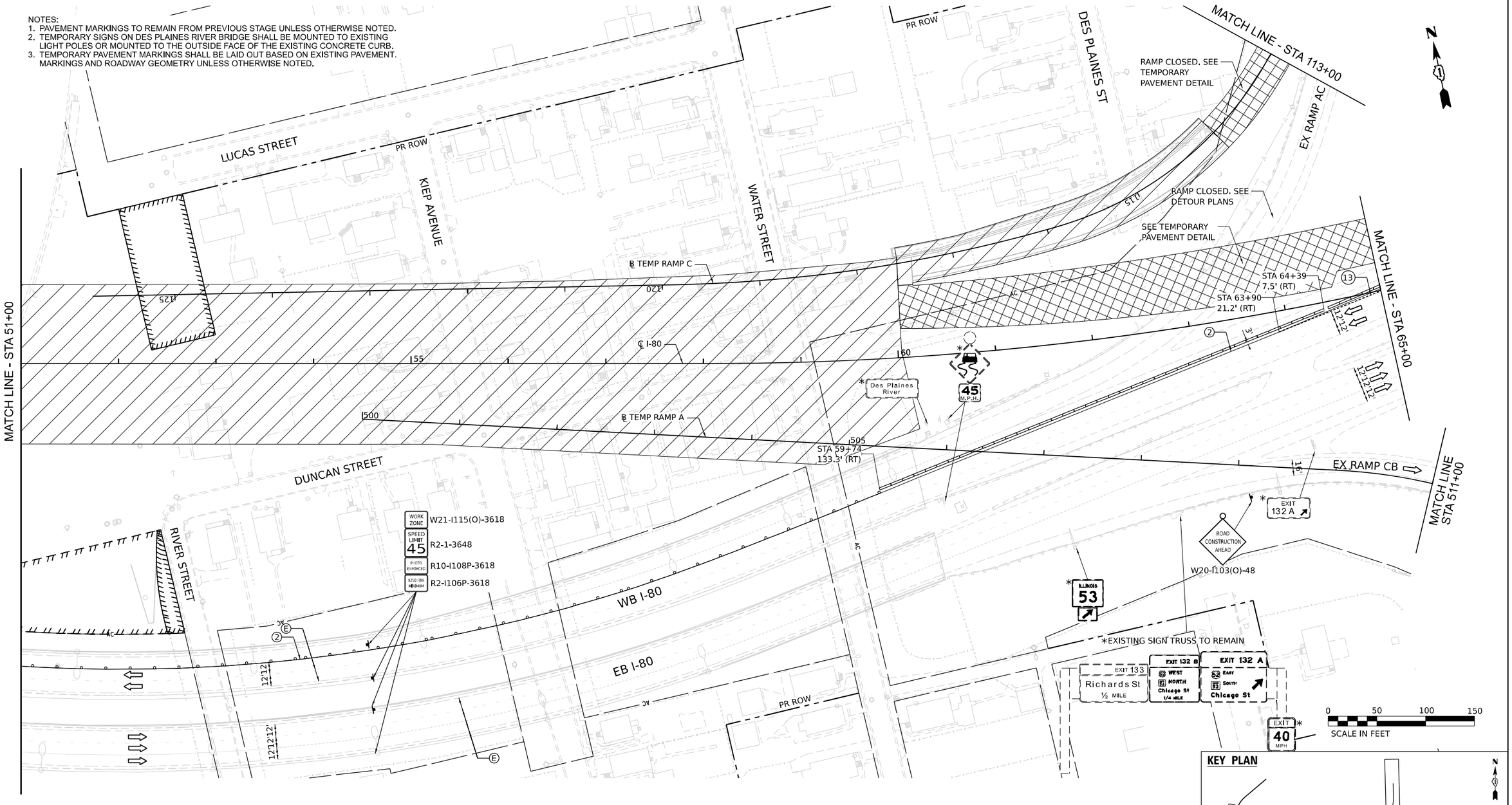

LEGEND

- WORK ZONE
- PAVEMENT CONSTRUCTED IN PREVIOUS STAGE
- TEMPORARY PAVEMENT (PREVIOUSLY CONSTRUCTED)
- TEMPORARY PAVEMENT (ACTIVELY CONSTRUCTING)
- TEMPORARY CONCRETE BARRIER OR RELOCATE TEMPORARY CONCRETE BARRIER
  I-80 AND RAMPS: 100' C-C TANGENTS, 50' ON TAPERS, 25' ON RAMPS
  CHICAGO STREET: 50' C-C TANGENTS, 25' ON TAPERS
- TEMPORARY IMPACT ATTENUATOR
- TYPE III BARRICADE
- DIRECTION OF TRAFFIC
- ARROW BOARD
- TEMPORARY TRAFFIC CONTROL SIGN AND SUPPORT
- * FROM PREVIOUS STAGE
- DIRECTIONAL INDICATOR BARRICADE WITH STEADY BURN MONODIRECTIONAL LIGHT

(E) EXISTING PAVEMENT MARKINGS
(R) PAVEMENT MARKING REMOVAL
(1) TEMP PVT MK - LINE 8": 9' SKIP, 3' DASH WHITE
(2) TEMP PVT MK - LINE 4": SOLID WHITE
(3) TEMP PVT MK - LINE 4": SOLID YELLOW
(4) TEMP PVT MK - LINE 5": 30' SKIP, 10' DASH WHITE
(5) TEMP PVT MK - LINE 8": SOLID WHITE
(6) TEMP PVT MK - LINE 12": SOLID WHITE, CHEVRONS AT 30'
(7) TEMP PVT MK - LINE 4": 30' SKIP, 10' DASH WHITE
(8) TEMP PVT MK - LINE 4": SOLID DOUBLE YELLOW 11" C-C
(9) TEMP PVT MK - LINE 6": SOLID WHITE
(10) TEMP PVT MK - LINE 24": SOLID WHITE
(11) TEMP PVT MK: WHITE LETTERS AND SYMBOLS
(12) TEMP PVT MK - LINE 12": SOLID YELLOW, SPACING PER STANDARD D1 TC-13
(13) TEMP PVT MK - LINE 4": 6' SKIP, 2' DASH WHITE
(14) TEMP PVT MK - LINE 6": 6' SKIP, 2' DASH WHITE

NOTE:
REFER TO PROPOSED TYPICAL SECTIONS FOR TEMPORARY PAVEMENT MARKING MATERIALS.

KEY PLAN

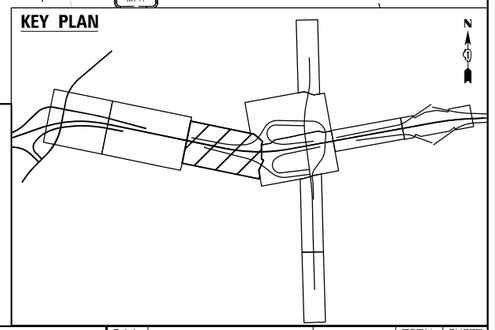

BURNS McDONNELL

USER NAME = USGP718052	DESIGNED - JAP	REVISED -	
	DRAWN - TMM	REVISED -	
PLOT SCALE = 100.000 ' / in.	CHECKED - JIR	REVISED -	
PLOT DATE = 11/6/2025	DATE - 11/7/2025	REVISED -	

STATE OF ILLINOIS
DEPARTMENT OF TRANSPORTATION

SUGGESTED STAGES OF CONSTRUCTION AND TRAFFIC CONTROL
STAGE 3

SCALE: 1" = 50' | SHEET 3 OF 8 SHEETS | STA. TO STA.

F.A.I. RTE.	SECTION	COUNTY	TOTAL SHEETS	SHEET NO.
80	FAI 80 21 STRUCTURE 2	WILL	1230	191
		CONTRACT NO. 62R23		
	ILLINOIS	FED. AID PROJECT		

MODEL: Default
FILE NAME: pw://transystems-pw.bentley.com:transyscorp-pw1-hosted/Documents/Projects_2018/CH401/401180022/03-WSP/CAD/62R23-RB-1/Sheets/CivilD162R23-ILL-EAST-MOTStage3-01.dgn

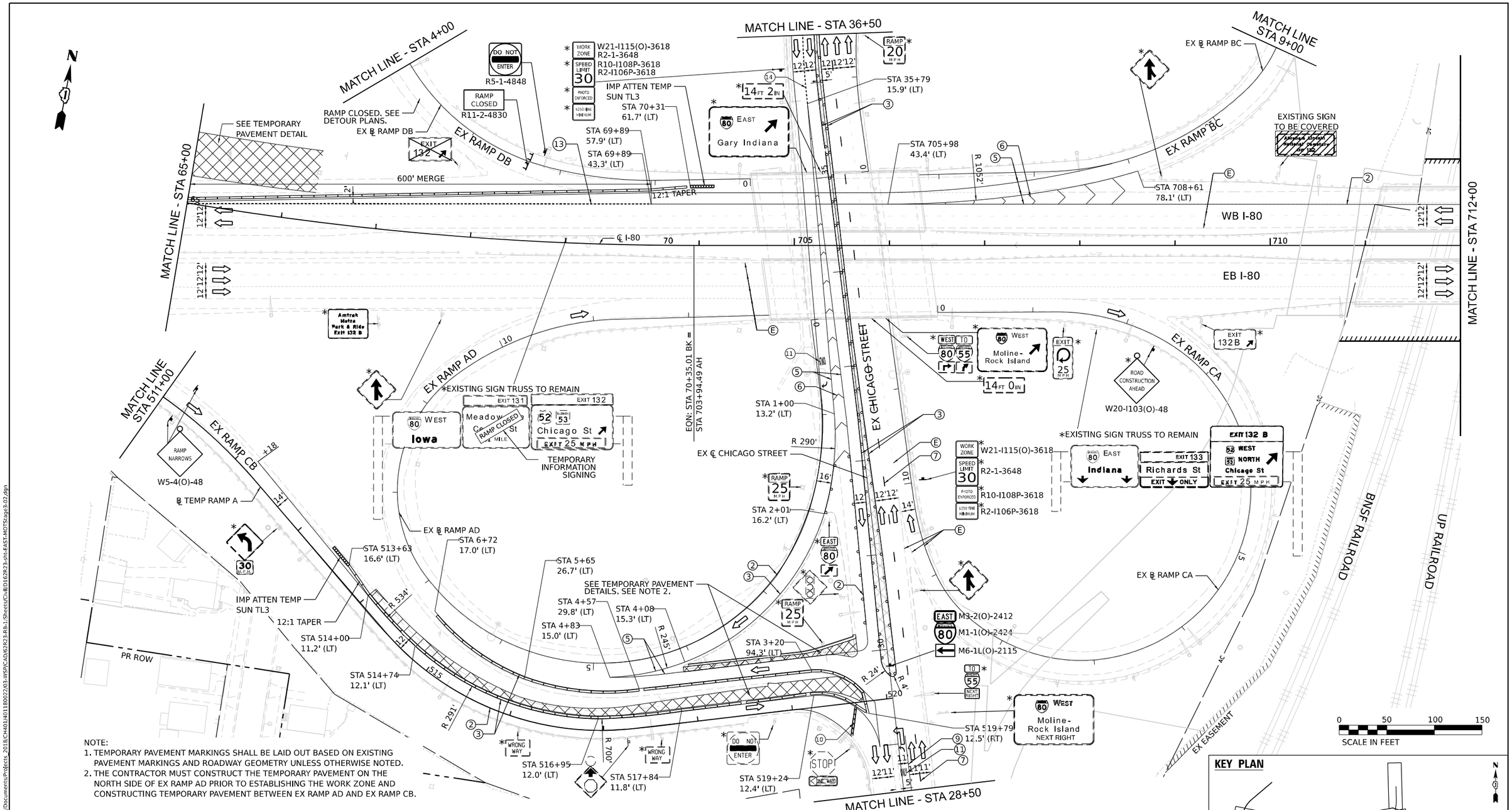

NOTE:
1. TEMPORARY PAVEMENT MARKINGS SHALL BE LAID OUT BASED ON EXISTING PAVEMENT MARKINGS AND ROADWAY GEOMETRY UNLESS OTHERWISE NOTED.
2. THE CONTRACTOR MUST CONSTRUCT THE TEMPORARY PAVEMENT ON THE NORTH SIDE OF EX RAMP AD PRIOR TO ESTABLISHING THE WORK ZONE AND CONSTRUCTING TEMPORARY PAVEMENT BETWEEN EX RAMP AD AND EX RAMP CB.

KEY PLAN

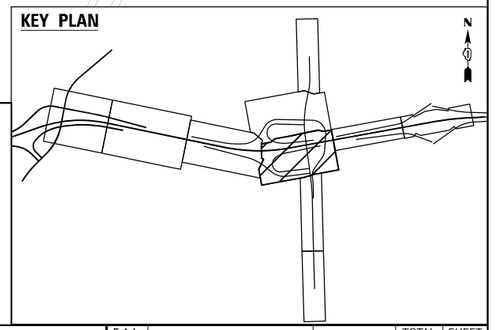

LEGEND

- WORK ZONE
- PAVEMENT CONSTRUCTED IN PREVIOUS STAGE
- TEMPORARY PAVEMENT (PREVIOUSLY CONSTRUCTED)
- TEMPORARY PAVEMENT (ACTIVELY CONSTRUCTING)
- TEMPORARY CONCRETE BARRIER OR RELOCATE TEMPORARY CONCRETE BARRIER
- I-80 AND RAMPS: 100' C-C TANGENTS, 50' ON TAPERS, 25' ON RAMPS
- CHICAGO STREET: 50' C-C TANGENTS, 25' ON TAPERS
- TEMPORARY IMPACT ATTENUATOR
- TYPE III BARRICADE
- DIRECTION OF TRAFFIC
- ARROW BOARD
- TEMPORARY TRAFFIC CONTROL SIGN AND SUPPORT
- * FROM PREVIOUS STAGE
- DIRECTIONAL INDICATOR BARRICADE WITH STEADY BURN MONODIRECTIONAL LIGHT

(E) EXISTING PAVEMENT MARKINGS
(R) PAVEMENT MARKING REMOVAL
(1) TEMP PVT MK - LINE 8": 9' SKIP, 3' DASH WHITE
(2) TEMP PVT MK - LINE 4": SOLID WHITE
(3) TEMP PVT MK - LINE 4": SOLID YELLOW
(4) TEMP PVT MK - LINE 5": 30' SKIP, 10' DASH WHITE
(5) TEMP PVT MK - LINE 8": SOLID WHITE
(6) TEMP PVT MK - LINE 12": SOLID WHITE, CHEVRONS AT 30'
(7) TEMP PVT MK - LINE 4": 30' SKIP, 10' DASH WHITE
(8) TEMP PVT MK - LINE 4": SOLID DOUBLE YELLOW 11" C-C
(9) TEMP PVT MK - LINE 6": SOLID WHITE
(10) TEMP PVT MK - LINE 24": SOLID WHITE
(11) TEMP PVT MK: WHITE LETTERS AND SYMBOLS
(12) TEMP PVT MK - LINE 12": SOLID YELLOW, SPACING PER STANDARD D1 TC-13
(13) TEMP PVT MK - LINE 4": 6' SKIP, 2' DASH WHITE
(14) TEMP PVT MK - LINE 6": 6' SKIP, 2' DASH WHITE

NOTE:
REFER TO PROPOSED TYPICAL SECTIONS FOR TEMPORARY PAVEMENT MARKING MATERIALS.

BURNS McDONNELL

USER NAME = USGP718052	DESIGNED - JAP	REVISED -	
	DRAWN - TMM	REVISED -	
PLOT SCALE = 100.000 ' / in.	CHECKED - JJR	REVISED -	
PLOT DATE = 11/6/2025	DATE - 11/7/2025	REVISED -	

STATE OF ILLINOIS
DEPARTMENT OF TRANSPORTATION

SUGGESTED STAGES OF CONSTRUCTION AND TRAFFIC CONTROL
STAGE 3

SCALE: 1" = 50' | SHEET 4 OF 8 SHEETS | STA. TO STA.

F.A.I. RTE.	SECTION	COUNTY	TOTAL SHEETS	SHEET NO.
80	FAI 80 21 STRUCTURE 2	WILL	1230	192
		CONTRACT NO. 62R23		
	ILLINOIS	FED. AID PROJECT		

MODEL: Default
FILE NAME: pw://transystems-pw.bentley.com:transyscorp-pw1-hosted/Documents/Projects_2018/CH401/401180022/03-WSP/CAD/62R23-RB-1/Sheets/Civil/0162R23-sht-EAST-MOTStage3-02.dgn

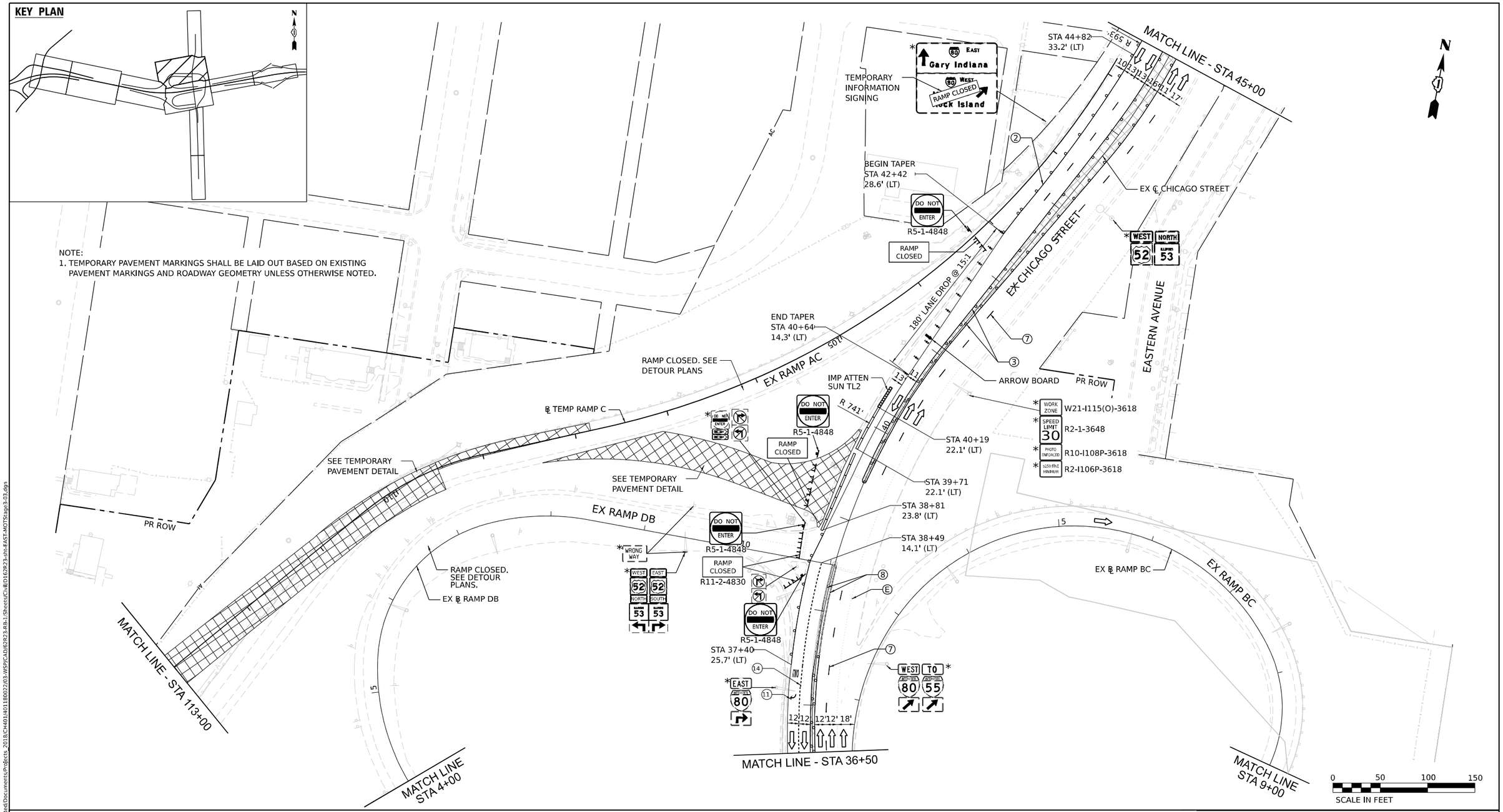

LEGEND

- WORK ZONE
- PAVEMENT CONSTRUCTED IN PREVIOUS STAGE
- TEMPORARY PAVEMENT (PREVIOUSLY CONSTRUCTED)
- TEMPORARY PAVEMENT (ACTIVELY CONSTRUCTING)
- TEMPORARY CONCRETE BARRIER OR RELOCATE TEMPORARY CONCRETE BARRIER
- I-80 AND RAMPS: 100' C-C TANGENTS, 50' ON TAPERS, 25' ON RAMPS
- CHICAGO STREET: 50' C-C TANGENTS, 25' ON TAPERS
- TEMPORARY IMPACT ATTENUATOR
- TYPE III BARRICADE
- DIRECTION OF TRAFFIC
- ARROW BOARD
- TEMPORARY TRAFFIC CONTROL SIGN AND SUPPORT
- * FROM PREVIOUS STAGE
- DIRECTIONAL INDICATOR BARRICADE WITH STEADY BURN MONODIRECTIONAL LIGHT

(E) EXISTING PAVEMENT MARKINGS
(R) PAVEMENT MARKING REMOVAL
(1) TEMP PVT MK - LINE 8": 9' SKIP, 3' DASH WHITE
(2) TEMP PVT MK - LINE 4": SOLID WHITE
(3) TEMP PVT MK - LINE 4": SOLID YELLOW
(4) TEMP PVT MK - LINE 5": 30' SKIP, 10' DASH WHITE
(5) TEMP PVT MK - LINE 8": SOLID WHITE
(6) TEMP PVT MK - LINE 12": SOLID WHITE, CHEVRONS AT 30'
(7) TEMP PVT MK - LINE 4": 30' SKIP, 10' DASH WHITE
(8) TEMP PVT MK - LINE 4": SOLID DOUBLE YELLOW 11" C-C
(9) TEMP PVT MK - LINE 6": SOLID WHITE
(10) TEMP PVT MK - LINE 24": SOLID WHITE
(11) TEMP PVT MK: WHITE LETTERS AND SYMBOLS
(12) TEMP PVT MK - LINE 12": SOLID YELLOW, SPACING PER STANDARD D1 TC-13
(13) TEMP PVT MK - LINE 4": 6' SKIP, 2' DASH WHITE
(14) TEMP PVT MK - LINE 6": 6' SKIP, 2' DASH WHITE

NOTE:
REFER TO PROPOSED TYPICAL SECTIONS FOR TEMPORARY PAVEMENT MARKING MATERIALS.

MODEL: Default
FILE NAME: pw://transystems-pw.bentley.com:transyscorp-pw1-hosted/Documents/Projects_2018/CH401/401180022/03-WSP/CAD/62R23-RB-1/Sheets/CwlD162R23-ih-EAST-MOTStage3-03.dgn

BURNS McDONNELL

USER NAME = USGP718052	DESIGNED - JAP	REVISED -	
	DRAWN - TMM	REVISED -	
PLOT SCALE = 100.000 ' / in.	CHECKED - JIR	REVISED -	
PLOT DATE = 11/6/2025	DATE - 11/7/2025	REVISED -	

STATE OF ILLINOIS
DEPARTMENT OF TRANSPORTATION

SUGGESTED STAGES OF CONSTRUCTION AND TRAFFIC CONTROL
STAGE 3

SCALE: 1" = 50' | SHEET 5 OF 8 SHEETS | STA. TO STA.

F.A.I. RTE.	SECTION	COUNTY	TOTAL SHEETS	SHEET NO.
80	FAI 80 21 STRUCTURE 2	WILL	1230	193
		CONTRACT NO. 62R23		
		ILLINOIS	FED. AID PROJECT	

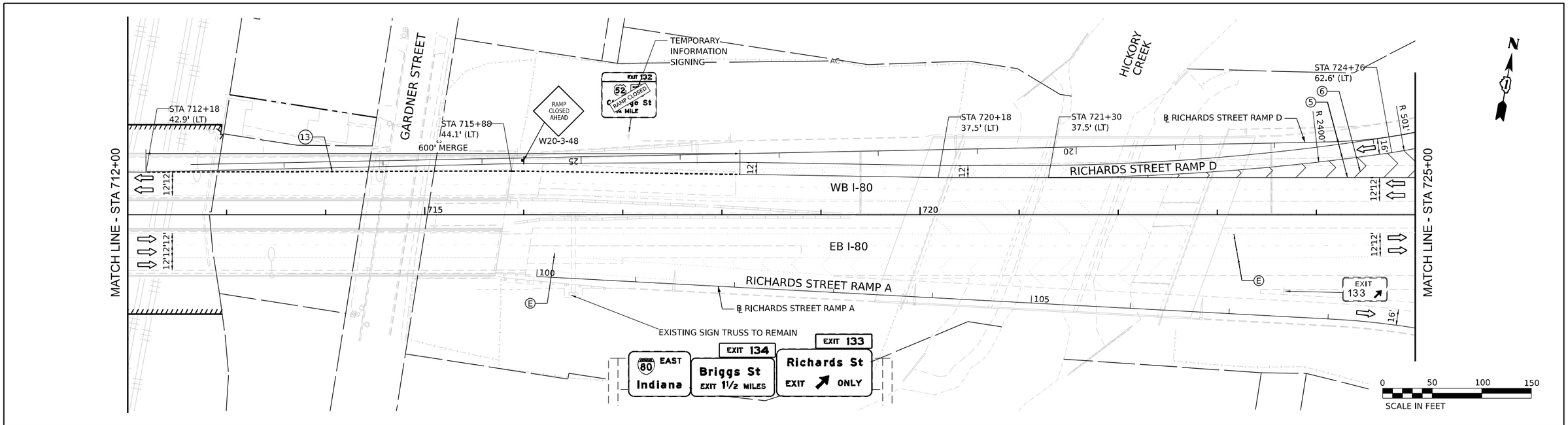

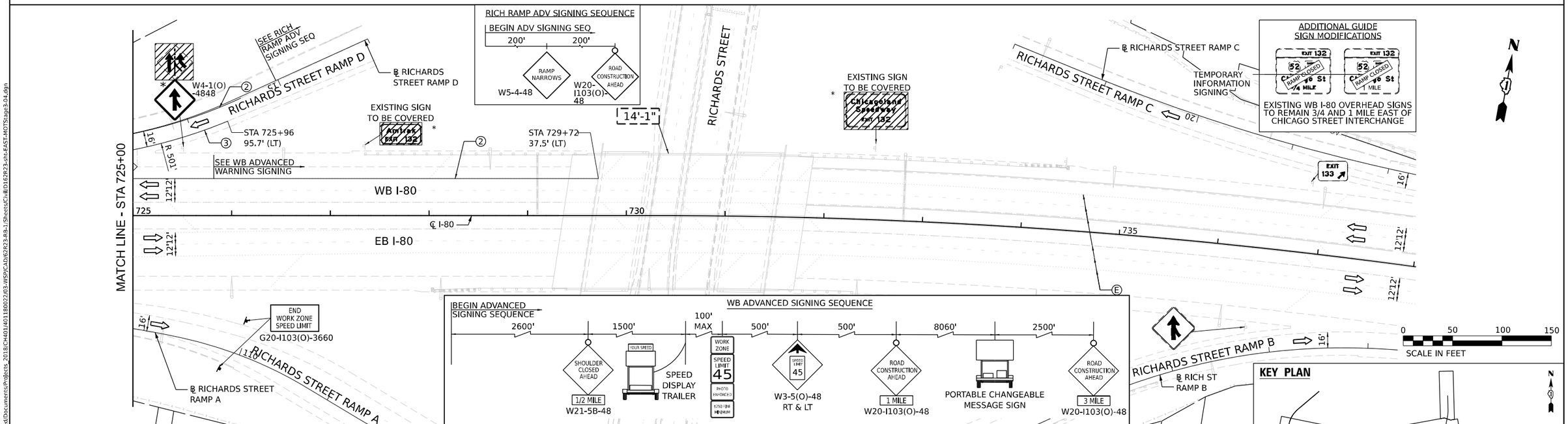

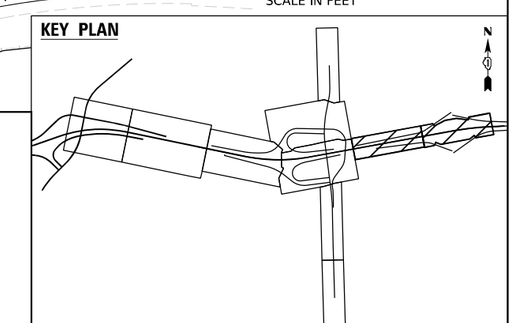

LEGEND

- WORK ZONE
- PAVEMENT CONSTRUCTED IN PREVIOUS STAGE
- TEMPORARY PAVEMENT (PREVIOUSLY CONSTRUCTED)
- TEMPORARY PAVEMENT (ACTIVELY CONSTRUCTING)
- TEMPORARY CONCRETE BARRIER OR RELOCATE TEMPORARY CONCRETE BARRIER
- I-80 AND RAMPS: 100' C-C TANGENTS, 50' ON TAPERS, 25' ON RAMPS
  CHICAGO STREET: 50' C-C TANGENTS, 25' ON TAPERS
- TEMPORARY IMPACT ATTENUATOR
- TYPE III BARRICADE
- DIRECTION OF TRAFFIC
- ARROW BOARD
- TEMPORARY TRAFFIC CONTROL SIGN AND SUPPORT
- * FROM PREVIOUS STAGE
- DIRECTIONAL INDICATOR BARRICADE WITH STEADY BURN MONODIRECTIONAL LIGHT

(E) EXISTING PAVEMENT MARKINGS
(R) PAVEMENT MARKING REMOVAL
(1) TEMP PVT MK - LINE 8": 9' SKIP, 3' DASH WHITE
(2) TEMP PVT MK - LINE 4": SOLID WHITE
(3) TEMP PVT MK - LINE 4": SOLID YELLOW
(4) TEMP PVT MK - LINE 5": 30' SKIP, 10' DASH WHITE
(5) TEMP PVT MK - LINE 8": SOLID WHITE
(6) TEMP PVT MK - LINE 12": SOLID WHITE, CHEVRONS AT 30'
(7) TEMP PVT MK - LINE 4": 30' SKIP, 10' DASH WHITE
(8) TEMP PVT MK - LINE 4": SOLID DOUBLE YELLOW 11" C-C
(9) TEMP PVT MK - LINE 6": SOLID WHITE
(10) TEMP PVT MK - LINE 24": SOLID WHITE
(11) TEMP PVT MK: WHITE LETTERS AND SYMBOLS
(12) TEMP PVT MK - LINE 12": SOLID YELLOW, SPACING PER STANDARD D1 TC-13
(13) TEMP PVT MK - LINE 4": 6' SKIP, 2' DASH WHITE
(14) TEMP PVT MK - LINE 6": 6' SKIP, 2' DASH WHITE

NOTE:
REFER TO PROPOSED TYPICAL SECTIONS FOR TEMPORARY PAVEMENT MARKING MATERIALS.

MODEL: Default
FILE NAME: pw://transystems-pw.bentley.com:transyscorp-pw1-hosted/Documents/Projects_2018/CH401/401180022/03-WSP/CAD/62R23-Rb-1/Sheets/Civil/D162R23-sht-EAST-MOTStage3-04.dgn

BURNS McDONNELL

USER NAME = USGP718052	DESIGNED - JAP	REVISED -	
	DRAWN - TMM	REVISED -	
PLOT SCALE = 100.000 ' / in.	CHECKED - JIR	REVISED -	
PLOT DATE = 11/6/2025	DATE - 11/7/2025	REVISED -	

STATE OF ILLINOIS
DEPARTMENT OF TRANSPORTATION

SUGGESTED STAGES OF CONSTRUCTION AND TRAFFIC CONTROL
STAGE 3

SCALE: 1" = 50' | SHEET 6 OF 8 SHEETS | STA. TO STA.

F.A.I. RTE.	SECTION	COUNTY	TOTAL SHEETS	SHEET NO.
80	FAI 80 21 STRUCTURE 2	WILL	1230	194
		CONTRACT NO. 62R23		
	ILLINOIS	FED. AID PROJECT		

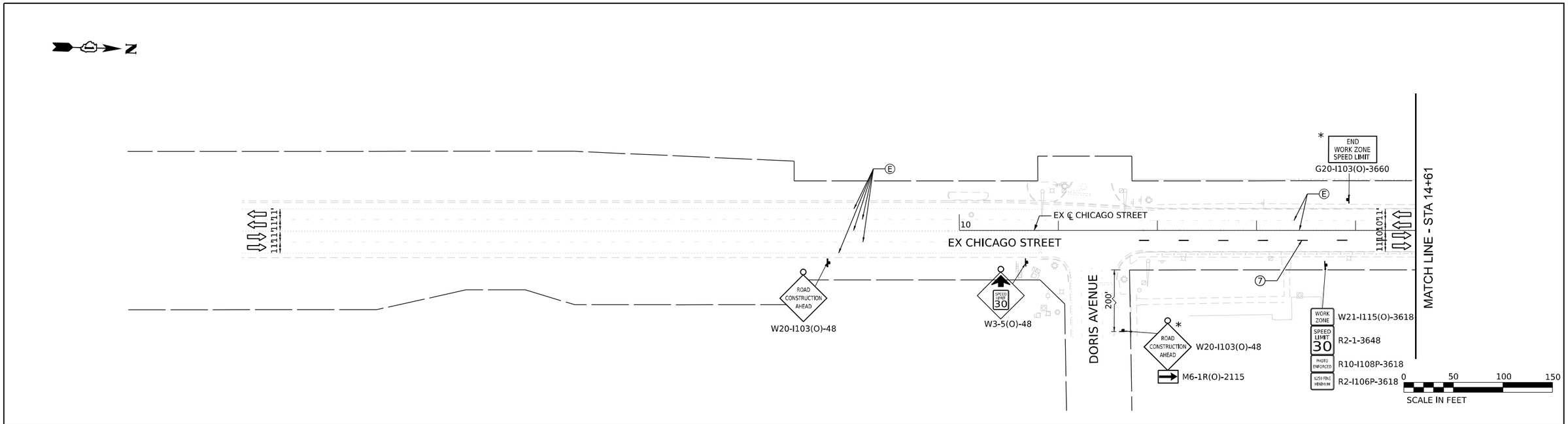

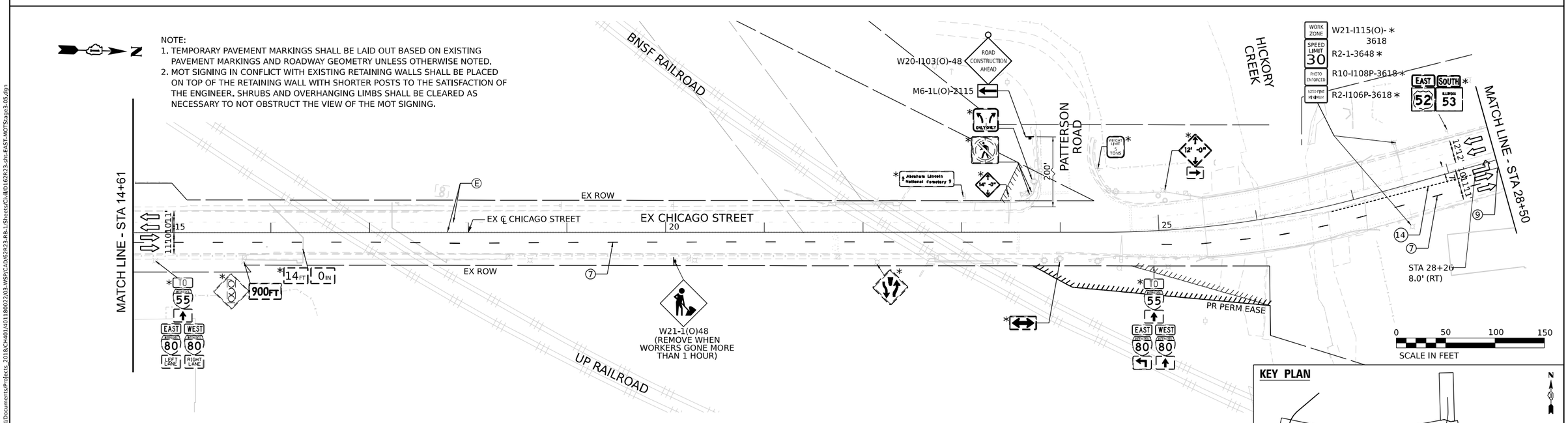

NOTE:
1. TEMPORARY PAVEMENT MARKINGS SHALL BE LAID OUT BASED ON EXISTING PAVEMENT MARKINGS AND ROADWAY GEOMETRY UNLESS OTHERWISE NOTED.
2. MOT SIGNING IN CONFLICT WITH EXISTING RETAINING WALLS SHALL BE PLACED ON TOP OF THE RETAINING WALL WITH SHORTER POSTS TO THE SATISFACTION OF THE ENGINEER. SHRUBS AND OVERHANGING LIMBS SHALL BE CLEARED AS NECESSARY TO NOT OBSTRUCT THE VIEW OF THE MOT SIGNING.

KEY PLAN

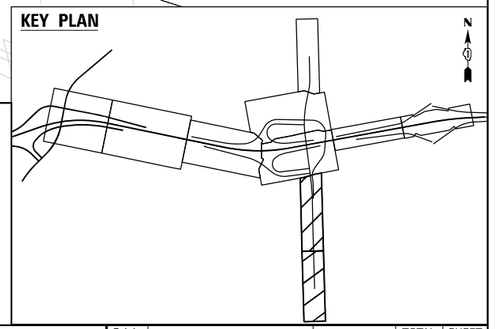

LEGEND

- WORK ZONE
- PAVEMENT CONSTRUCTED IN PREVIOUS STAGE
- TEMPORARY PAVEMENT (PREVIOUSLY CONSTRUCTED)
- TEMPORARY PAVEMENT (ACTIVELY CONSTRUCTING)
- TEMPORARY CONCRETE BARRIER OR RELOCATE TEMPORARY CONCRETE BARRIER
- I-80 AND RAMPS: 100' C-C TANGENTS, 50' ON TAPERS, 25' ON RAMPS
- CHICAGO STREET: 50' C-C TANGENTS, 25' ON TAPERS
- TEMPORARY IMPACT ATTENUATOR
- TYPE III BARRICADE
- DIRECTION OF TRAFFIC
- ARROW BOARD
- TEMPORARY TRAFFIC CONTROL SIGN AND SUPPORT
- * FROM PREVIOUS STAGE
- DIRECTIONAL INDICATOR BARRICADE WITH STEADY BURN MONODIRECTIONAL LIGHT

(E) EXISTING PAVEMENT MARKINGS
(R) PAVEMENT MARKING REMOVAL
(1) TEMP PVT MK - LINE 8": 9' SKIP, 3' DASH WHITE
(2) TEMP PVT MK - LINE 4": SOLID WHITE
(3) TEMP PVT MK - LINE 4": SOLID YELLOW
(4) TEMP PVT MK - LINE 5": 30' SKIP, 10' DASH WHITE
(5) TEMP PVT MK - LINE 8": SOLID WHITE
(6) TEMP PVT MK - LINE 12": SOLID WHITE, CHEVRONS AT 30'
(7) TEMP PVT MK - LINE 4": 30' SKIP, 10' DASH WHITE
(8) TEMP PVT MK - LINE 4": SOLID DOUBLE YELLOW 11" C-C
(9) TEMP PVT MK - LINE 6": SOLID WHITE
(10) TEMP PVT MK - LINE 24": SOLID WHITE
(11) TEMP PVT MK: WHITE LETTERS AND SYMBOLS
(12) TEMP PVT MK - LINE 12": SOLID YELLOW, SPACING PER STANDARD D1 TC-13
(13) TEMP PVT MK - LINE 4": 6' SKIP, 2' DASH WHITE
(14) TEMP PVT MK - LINE 6": 6' SKIP, 2' DASH WHITE

NOTE:
REFER TO PROPOSED TYPICAL SECTIONS FOR TEMPORARY PAVEMENT MARKING MATERIALS.

MODEL: Default
FILE NAME: pw://transystems-pw.bentley.com:transyscorp-pw1-hosted/Documents/Projects_2018/CH401/401180022/03-WSP/CAD/62R23-RB-1/Sheets/Civil/01G62R23-sht-EAST-MOTStage3-05.dgn

BURNS McDONNELL

USER NAME = USGP718052	DESIGNED - JAP	REVISED -	
	DRAWN - TMM	REVISED -	
PLOT SCALE = 100.000 ' / in.	CHECKED - JJR	REVISED -	
PLOT DATE = 11/6/2025	DATE - 11/7/2025	REVISED -	

STATE OF ILLINOIS
DEPARTMENT OF TRANSPORTATION

SUGGESTED STAGES OF CONSTRUCTION AND TRAFFIC CONTROL
STAGE 3

SCALE: 1" = 50' | SHEET 7 OF 8 SHEETS | STA. TO STA.

F.A.I. RTE.	SECTION	COUNTY	TOTAL SHEETS	SHEET NO.
80	FAI 80 21 STRUCTURE 2	WILL	1230	195
		CONTRACT NO. 62R23		
	ILLINOIS	FED. AID PROJECT		

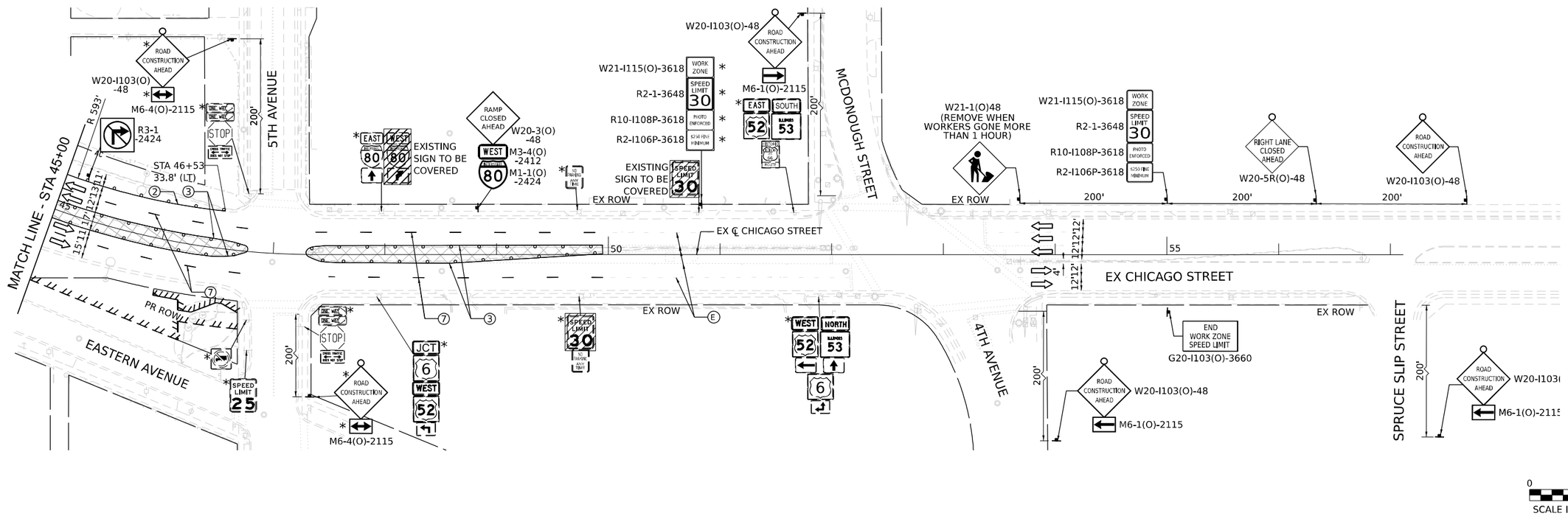

KEY PLAN

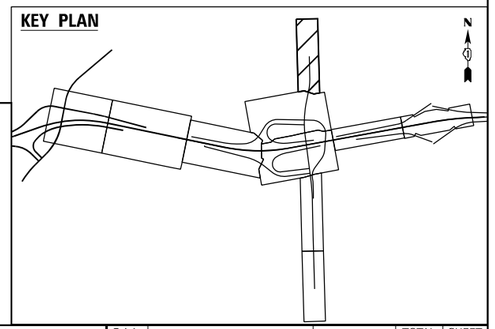

LEGEND

- WORK ZONE
- PAVEMENT CONSTRUCTED IN PREVIOUS STAGE
- TEMPORARY PAVEMENT (PREVIOUSLY CONSTRUCTED)
- TEMPORARY PAVEMENT (ACTIVELY CONSTRUCTING)
- TEMPORARY CONCRETE BARRIER OR RELOCATE TEMPORARY CONCRETE BARRIER
- I-80 AND RAMPS: 100' C-C TANGENTS, 50' ON TAPERS, 25' ON RAMPS
- CHICAGO STREET: 50' C-C TANGENTS, 25' ON TAPERS
- TEMPORARY IMPACT ATTENUATOR
- TYPE III BARRICADE
- DIRECTION OF TRAFFIC
- ARROW BOARD
- TEMPORARY TRAFFIC CONTROL SIGN AND SUPPORT
- * FROM PREVIOUS STAGE
- DIRECTIONAL INDICATOR BARRICADE WITH STEADY BURN MONODIRECTIONAL LIGHT

(E) EXISTING PAVEMENT MARKINGS
(R) PAVEMENT MARKING REMOVAL
(1) TEMP PVT MK - LINE 8": 9' SKIP, 3' DASH WHITE
(2) TEMP PVT MK - LINE 4": SOLID WHITE
(3) TEMP PVT MK - LINE 4": SOLID YELLOW
(4) TEMP PVT MK - LINE 5": 30' SKIP, 10' DASH WHITE
(5) TEMP PVT MK - LINE 8": SOLID WHITE
(6) TEMP PVT MK - LINE 12": SOLID WHITE, CHEVRONS AT 30'
(7) TEMP PVT MK - LINE 4": 30' SKIP, 10' DASH WHITE
(8) TEMP PVT MK - LINE 4": SOLID DOUBLE YELLOW 11" C-C
(9) TEMP PVT MK - LINE 6": SOLID WHITE
(10) TEMP PVT MK - LINE 24": SOLID WHITE
(11) TEMP PVT MK: WHITE LETTERS AND SYMBOLS
(12) TEMP PVT MK - LINE 12": SOLID YELLOW, SPACING PER STANDARD D1 TC-13
(13) TEMP PVT MK - LINE 4": 6' SKIP, 2' DASH WHITE
(14) TEMP PVT MK - LINE 6": 6' SKIP, 2' DASH WHITE

NOTE:
REFER TO PROPOSED TYPICAL SECTIONS FOR TEMPORARY PAVEMENT MARKING MATERIALS.

BURNS McDONNELL

USER NAME = USGP718052	DESIGNED - JAP	REVISED -	
	DRAWN - TMM	REVISED -	
PLOT SCALE = 100.000 ' / in.	CHECKED - JIR	REVISED -	
PLOT DATE = 11/6/2025	DATE - 11/7/2025	REVISED -	

STATE OF ILLINOIS
DEPARTMENT OF TRANSPORTATION

SUGGESTED STAGES OF CONSTRUCTION AND TRAFFIC CONTROL
STAGE 3

SCALE: 1" = 50' | SHEET 8 OF 8 SHEETS | STA. TO STA.

F.A.I. RTE.	SECTION	COUNTY	TOTAL SHEETS	SHEET NO.
80	FAI 80 21 STRUCTURE 2	WILL	1230	196
		CONTRACT NO. 62R23		
	ILLINOIS	FED. AID PROJECT		

MODEL: Default
FILE NAME: pw://transystems-pw.bentley.com:transyscorp-pw1-hosted/Documents/Projects_2018/CH401/401180022/03-WSP/CAD/62R23-RB-1/Sheets/Civil/D162R23-sht-EAST-MOTStage3-06.dgn

NOTES:
1. PAVEMENT MARKINGS TO REMAIN FROM PREVIOUS STAGE UNLESS OTHERWISE NOTED.
2. TEMPORARY SIGNS ON DES PLAINES RIVER BRIDGE SHALL BE MOUNTED TO EXISTING LIGHT POLES OR MOUNTED TO THE OUTSIDE FACE OF THE EXISTING CONCRETE CURB.
3. TEMPORARY PAVEMENT MARKINGS SHALL BE LAID OUT BASED ON EXISTING PAVEMENT. MARKINGS AND ROADWAY GEOMETRY UNLESS OTHERWISE NOTED.

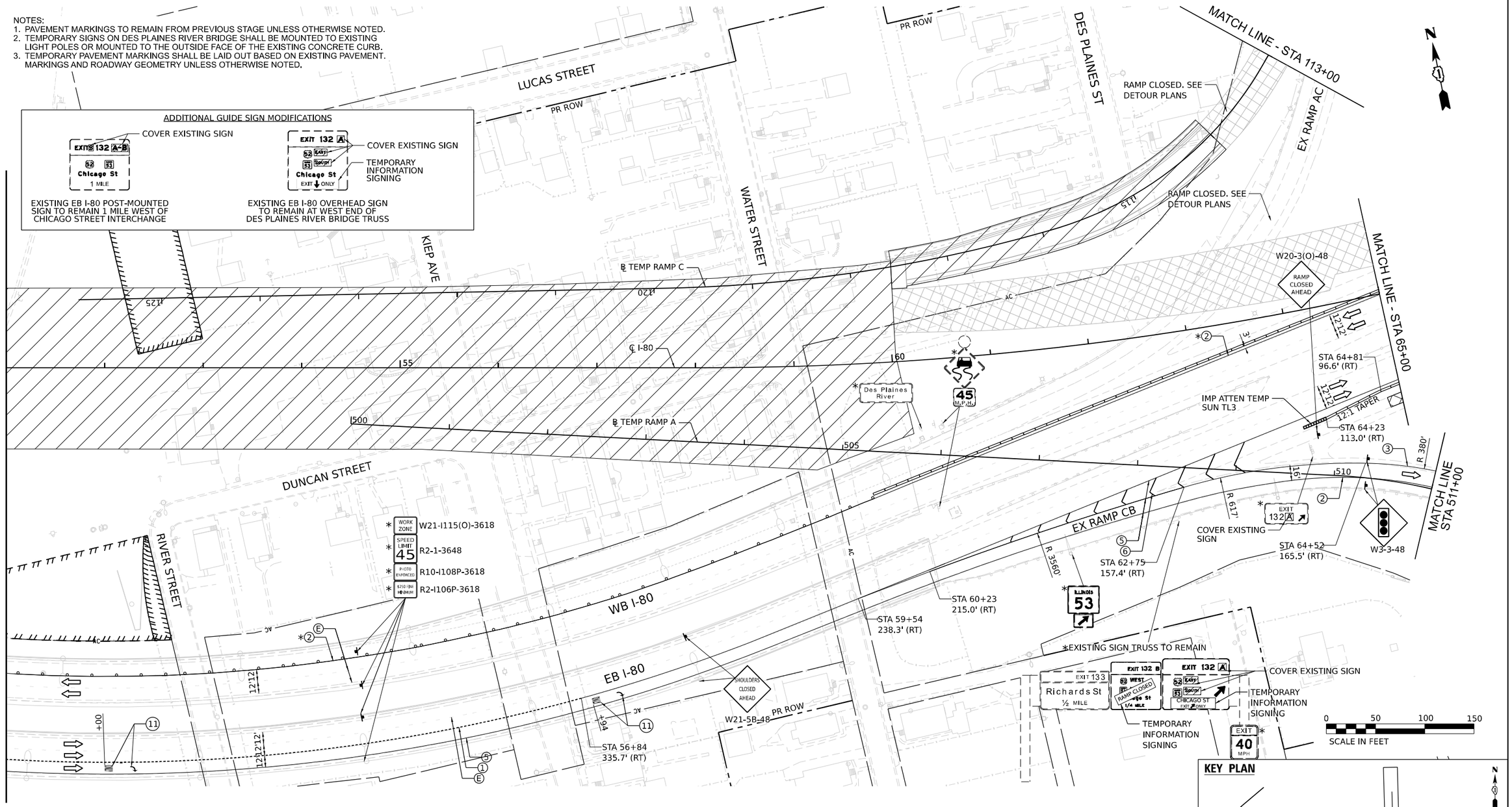

LEGEND

- WORK ZONE
- PAVEMENT CONSTRUCTED IN PREVIOUS STAGE
- TEMPORARY PAVEMENT (PREVIOUSLY CONSTRUCTED)
- TEMPORARY PAVEMENT (ACTIVELY CONSTRUCTING)
- TEMPORARY CONCRETE BARRIER OR RELOCATE TEMPORARY CONCRETE BARRIER
  I-80 AND RAMPS: 100' C-C TANGENTS, 50' ON TAPERS, 25' ON RAMPS
  CHICAGO STREET: 50' C-C TANGENTS, 25' ON TAPERS
- TEMPORARY IMPACT ATTENUATOR
- TYPE III BARRICADE
- DIRECTION OF TRAFFIC
- ARROW BOARD
- TEMPORARY TRAFFIC CONTROL SIGN AND SUPPORT
- * FROM PREVIOUS STAGE
- DIRECTIONAL INDICATOR BARRICADE WITH STEADY BURN MONODIRECTIONAL LIGHT

(E) EXISTING PAVEMENT MARKINGS
(R) PAVEMENT MARKING REMOVAL
(1) TEMP PVT MK - LINE 8": 9' SKIP, 3' DASH WHITE
(2) TEMP PVT MK - LINE 4": SOLID WHITE
(3) TEMP PVT MK - LINE 4": SOLID YELLOW
(4) TEMP PVT MK - LINE 5": 30' SKIP, 10' DASH WHITE
(5) TEMP PVT MK - LINE 8": SOLID WHITE
(6) TEMP PVT MK - LINE 12": SOLID WHITE, CHEVRONS AT 30'
(7) TEMP PVT MK - LINE 4": 30' SKIP, 10' DASH WHITE
(8) TEMP PVT MK - LINE 4": SOLID DOUBLE YELLOW 11" C-C
(9) TEMP PVT MK - LINE 6": SOLID WHITE
(10) TEMP PVT MK - LINE 24": SOLID WHITE
(11) TEMP PVT MK: WHITE LETTERS AND SYMBOLS
(12) TEMP PVT MK - LINE 12": SOLID YELLOW, SPACING PER STANDARD D1 TC-13
(13) TEMP PVT MK - LINE 4": 6' SKIP, 2' DASH WHITE
(14) TEMP PVT MK - LINE 6": 6' SKIP, 2' DASH WHITE

NOTE:
REFER TO PROPOSED TYPICAL SECTIONS FOR TEMPORARY PAVEMENT MARKING MATERIALS.

BURNS McDONNELL

USER NAME = USGP718052	DESIGNED - JAP	REVISED -	
	DRAWN - TMM	REVISED -	
PLOT SCALE = 100.000 ' / in.	CHECKED - JIR	REVISED -	
PLOT DATE = 11/6/2025	DATE - 11/7/2025	REVISED -	

STATE OF ILLINOIS
DEPARTMENT OF TRANSPORTATION

SUGGESTED STAGES OF CONSTRUCTION AND TRAFFIC CONTROL
STAGE 3 – SUBSTAGE

SCALE: 1" = 50' | SHEET 3 OF 8 SHEETS | STA. TO STA.

F.A.I. RTE.	SECTION	COUNTY	TOTAL SHEETS	SHEET NO.
80	FAI 80 21 STRUCTURE 2	WILL	1230	197
		CONTRACT NO. 62R23		
	ILLINOIS	FED. AID PROJECT		

MODEL: Default
FILE NAME: pw://transystems-pw.bentley.com:transyscorp-pw1-hosted/Documents/Projects_2018/CH401/401180022/03-WSP/CAD/62R23-RB-1/Sheets/CivilD162R23-sht-EAST-MOTSStage3-substage-01.dgn

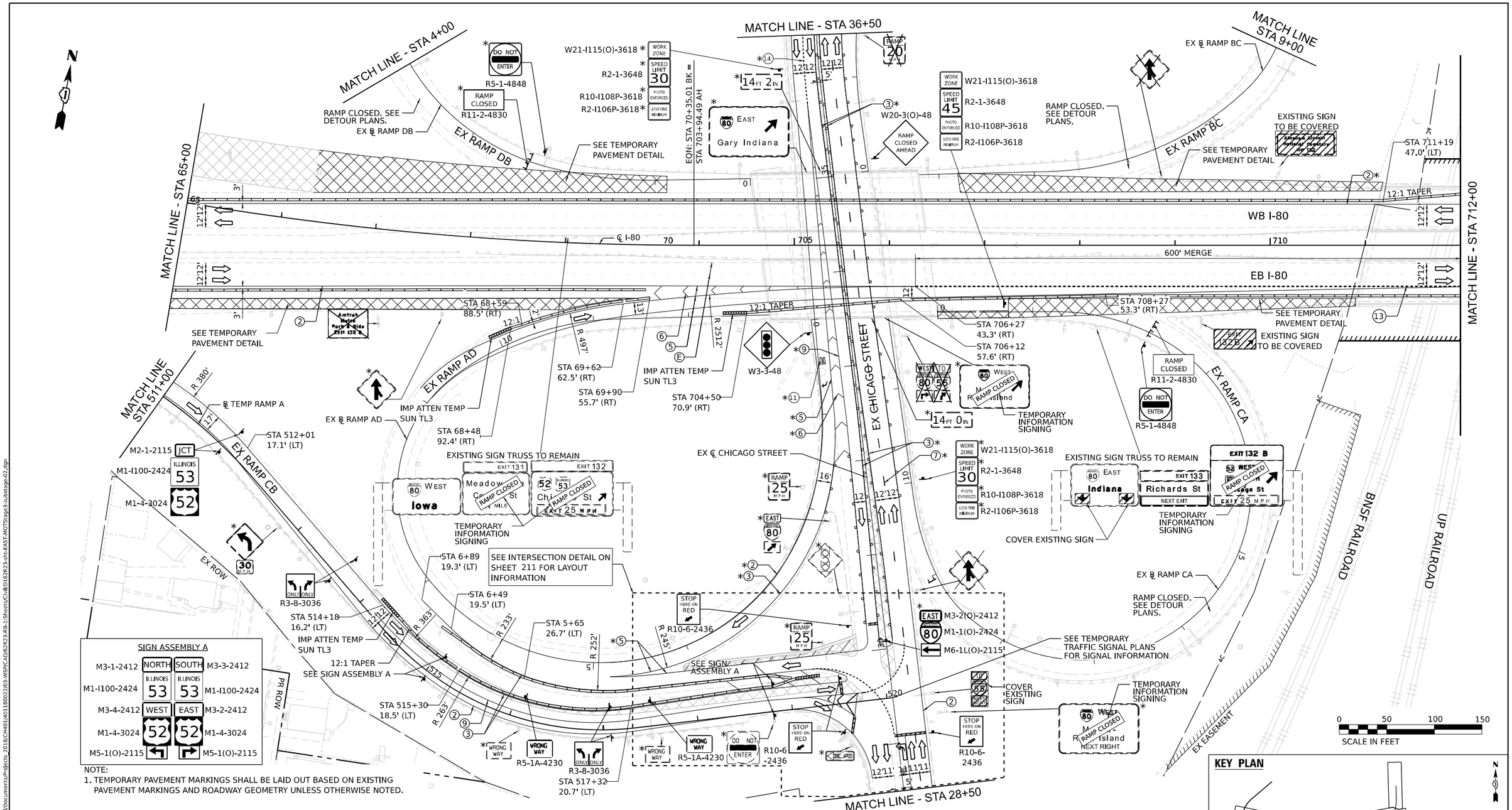

LEGEND

- WORK ZONE
- PAVEMENT CONSTRUCTED IN PREVIOUS STAGE
- TEMPORARY PAVEMENT (PREVIOUSLY CONSTRUCTED)
- TEMPORARY PAVEMENT (ACTIVELY CONSTRUCTING)
- TEMPORARY CONCRETE BARRIER OR RELOCATE TEMPORARY CONCRETE BARRIER
  - I-80 AND RAMPS: 100' C-C TANGENTS, 50' ON TAPERS, 25' ON RAMPS
  - CHICAGO STREET: 50' C-C TANGENTS, 25' ON TAPERS
- TEMPORARY IMPACT ATTENUATOR
- TYPE III BARRICADE
- DIRECTION OF TRAFFIC
- ARROW BOARD
- TEMPORARY TRAFFIC CONTROL SIGN AND SUPPORT
- * FROM PREVIOUS STAGE
- DIRECTIONAL INDICATOR BARRICADE WITH STEADY BURN MONODIRECTIONAL LIGHT

(E) EXISTING PAVEMENT MARKINGS
(R) PAVEMENT MARKING REMOVAL
(1) TEMP PVT MK - LINE 8": 9' SKIP, 3' DASH WHITE
(2) TEMP PVT MK - LINE 4": SOLID WHITE
(3) TEMP PVT MK - LINE 4": SOLID YELLOW
(4) TEMP PVT MK - LINE 5": 30' SKIP, 10' DASH WHITE
(5) TEMP PVT MK - LINE 8": SOLID WHITE
(6) TEMP PVT MK - LINE 12": SOLID WHITE, CHEVRONS AT 30'
(7) TEMP PVT MK - LINE 4": 30' SKIP, 10' DASH WHITE
(8) TEMP PVT MK - LINE 4": SOLID DOUBLE YELLOW 11" C-C
(9) TEMP PVT MK - LINE 6": SOLID WHITE
(10) TEMP PVT MK - LINE 24": SOLID WHITE
(11) TEMP PVT MK: WHITE LETTERS AND SYMBOLS
(12) TEMP PVT MK - LINE 12": SOLID YELLOW, SPACING PER STANDARD D1 TC-13
(13) TEMP PVT MK - LINE 4": 6' SKIP, 2' DASH WHITE
(14) TEMP PVT MK - LINE 6": 6' SKIP, 2' DASH WHITE

NOTE:
REFER TO PROPOSED TYPICAL SECTIONS FOR TEMPORARY PAVEMENT MARKING MATERIALS.

MODEL: Default
FILE NAME: pw://transystems-pw.bentley.com:transyscorp-pw1-hosted/Documents/Projects_2018/CH401/401180022/03-WSP/CAD/62R23-RB-1/Sheets/Civil/D1R23-sht-EAST-MOTStage3-substage-02.dgn

BURNS McDONNELL

USER NAME = USGP718052	DESIGNED - JAP	REVISED -	
	DRAWN - TMM	REVISED -	
PLOT SCALE = 100.000 ' / in.	CHECKED - JIR	REVISED -	
PLOT DATE = 11/6/2025	DATE - 11/7/2025	REVISED -	

STATE OF ILLINOIS
DEPARTMENT OF TRANSPORTATION

SUGGESTED STAGES OF CONSTRUCTION AND TRAFFIC CONTROL
STAGE 3 – SUBSTAGE

SCALE: 1" = 50' | SHEET 4 OF 8 SHEETS | STA. TO STA.

F.A.I. RTE.	SECTION	COUNTY	TOTAL SHEETS	SHEET NO.
80	FAI 80 21 STRUCTURE 2	WILL	1230	198
		CONTRACT NO. 62R23		
	ILLINOIS	FED. AID PROJECT		

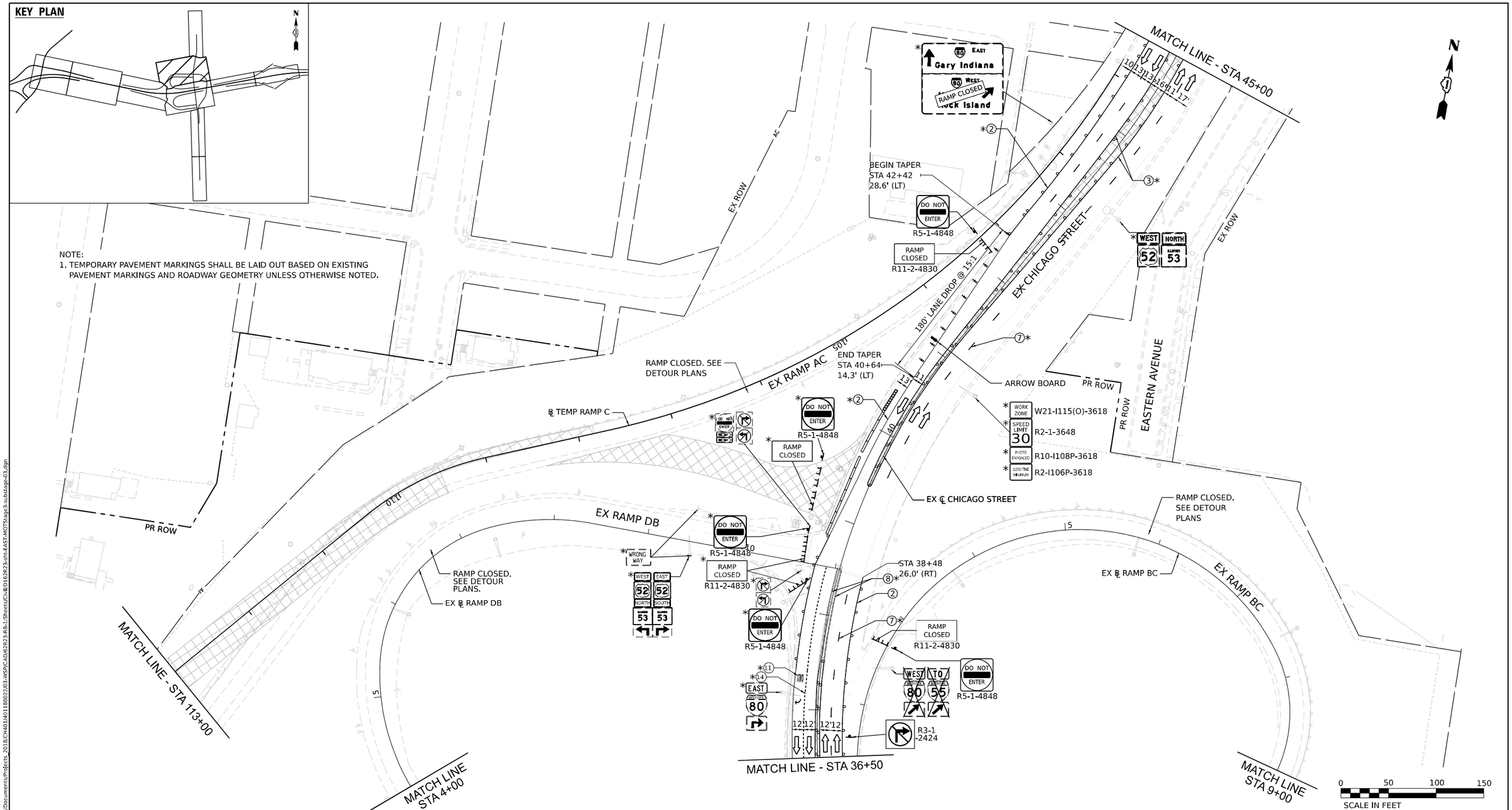

LEGEND

- WORK ZONE
- PAVEMENT CONSTRUCTED IN PREVIOUS STAGE
- TEMPORARY PAVEMENT (PREVIOUSLY CONSTRUCTED)
- TEMPORARY PAVEMENT (ACTIVELY CONSTRUCTING)
- TEMPORARY CONCRETE BARRIER OR RELOCATE TEMPORARY CONCRETE BARRIER
- I-80 AND RAMPS: 100' C-C TANGENTS, 50' ON TAPERS, 25' ON RAMPS
- CHICAGO STREET: 50' C-C TANGENTS, 25' ON TAPERS
- TEMPORARY IMPACT ATTENUATOR
- TYPE III BARRICADE
- DIRECTION OF TRAFFIC
- ARROW BOARD
- TEMPORARY TRAFFIC CONTROL SIGN AND SUPPORT
- FROM PREVIOUS STAGE
- DIRECTIONAL INDICATOR BARRICADE WITH STEADY BURN MONODIRECTIONAL LIGHT

(E) EXISTING PAVEMENT MARKINGS
(R) PAVEMENT MARKING REMOVAL
(1) TEMP PVT MK - LINE 8": 9' SKIP, 3' DASH WHITE
(2) TEMP PVT MK - LINE 4": SOLID WHITE
(3) TEMP PVT MK - LINE 4": SOLID YELLOW
(4) TEMP PVT MK - LINE 5": 30' SKIP, 10' DASH WHITE
(5) TEMP PVT MK - LINE 8": SOLID WHITE
(6) TEMP PVT MK - LINE 12": SOLID WHITE, CHEVRONS AT 30'
(7) TEMP PVT MK - LINE 4": 30' SKIP, 10' DASH WHITE
(8) TEMP PVT MK - LINE 4": SOLID DOUBLE YELLOW 11" C-C
(9) TEMP PVT MK - LINE 6": SOLID WHITE
(10) TEMP PVT MK - LINE 24": SOLID WHITE
(11) TEMP PVT MK: WHITE LETTERS AND SYMBOLS
(12) TEMP PVT MK - LINE 12": SOLID YELLOW, SPACING PER STANDARD D1 TC-13
(13) TEMP PVT MK - LINE 4": 6' SKIP, 2' DASH WHITE
(14) TEMP PVT MK - LINE 6": 6' SKIP, 2' DASH WHITE

NOTE:
REFER TO PROPOSED TYPICAL SECTIONS FOR TEMPORARY PAVEMENT MARKING MATERIALS.

MODEL: Default
FILE NAME: pw://transystems-pw.bentley.com:transyscorp-pw1-hosted/Documents/Projects_2018/CH401/401180022/03-WSP/CAD/62R23-RB-1/Sheets/Civil/D162R23-sht-FAST-MOTSStage3-substage-03.dgn

BURNS McDONNELL

USER NAME = USGP718052	DESIGNED - JAP	REVISED -	
	DRAWN - TMM	REVISED -	
PLOT SCALE = 100.000 ' / in.	CHECKED - JIR	REVISED -	
PLOT DATE = 11/6/2025	DATE - 11/7/2025	REVISED -	

STATE OF ILLINOIS
DEPARTMENT OF TRANSPORTATION

SUGGESTED STAGES OF CONSTRUCTION AND TRAFFIC CONTROL
STAGE 3 – SUBSTAGE

SCALE: 1" = 50' | SHEET 5 OF 8 SHEETS | STA. TO STA.

F.A.I. RTE.	SECTION	COUNTY	TOTAL SHEETS	SHEET NO.
80	FAI 80 21 STRUCTURE 2	WILL	1230	199
		CONTRACT NO. 62R23		
	ILLINOIS	FED. AID PROJECT		

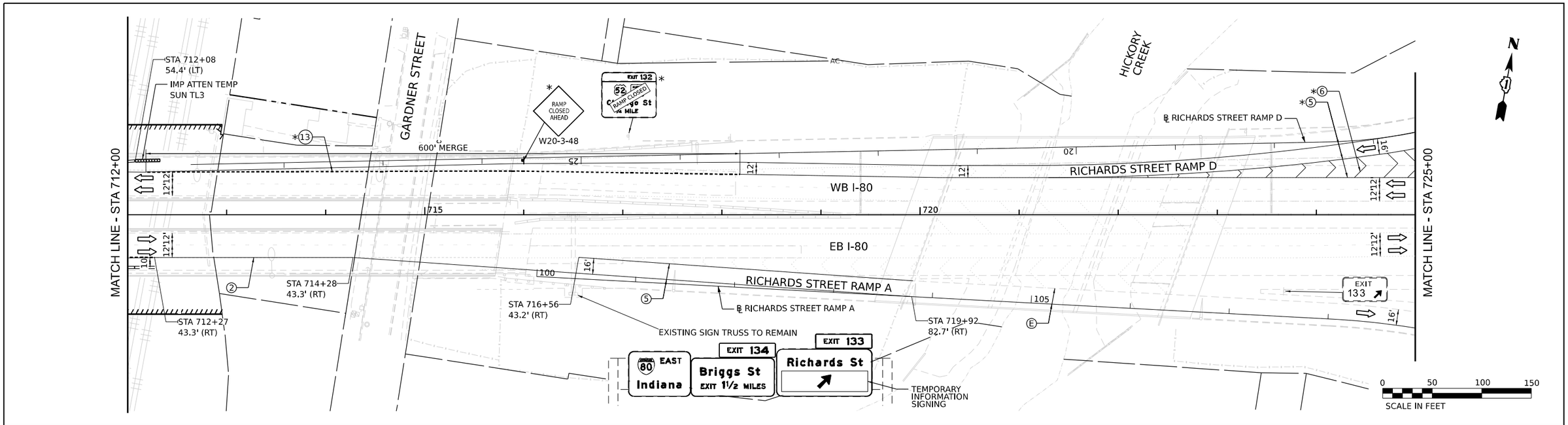

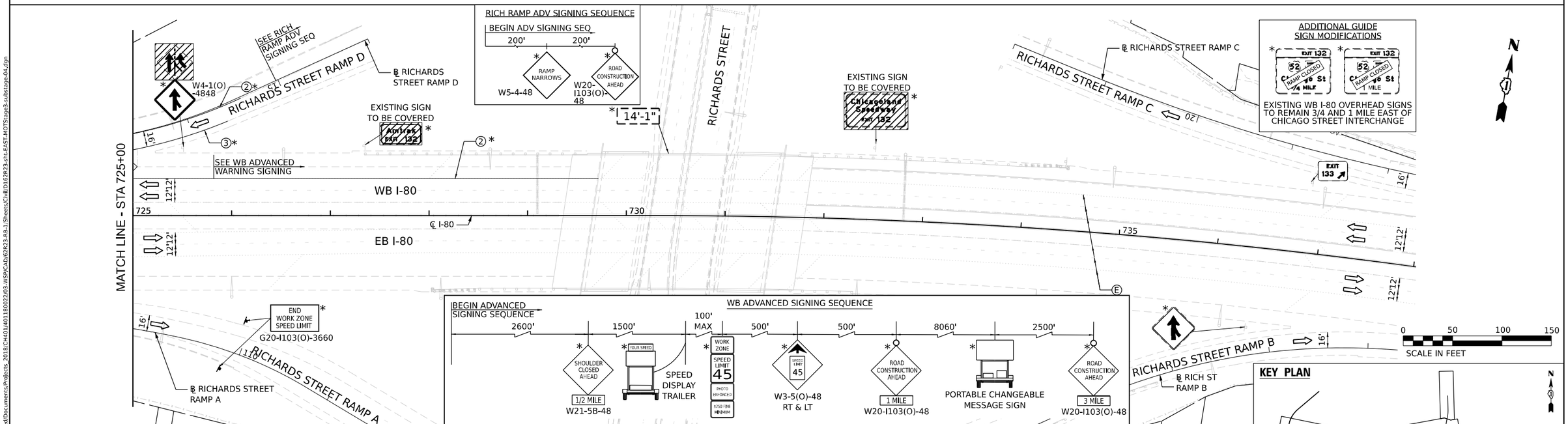

KEY PLAN

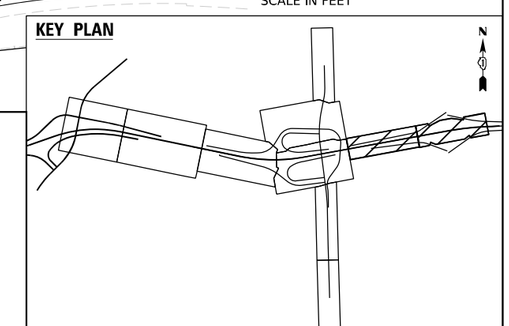

LEGEND

- WORK ZONE
- PAVEMENT CONSTRUCTED IN PREVIOUS STAGE
- TEMPORARY PAVEMENT (PREVIOUSLY CONSTRUCTED)
- TEMPORARY PAVEMENT (ACTIVELY CONSTRUCTING)
- TEMPORARY CONCRETE BARRIER OR RELOCATE TEMPORARY CONCRETE BARRIER
  - I-80 AND RAMPS: 100' C-C TANGENTS, 50' ON TAPERS, 25' ON RAMPS
  - CHICAGO STREET: 50' C-C TANGENTS, 25' ON TAPERS
- TEMPORARY IMPACT ATTENUATOR
- TYPE III BARRICADE
- DIRECTION OF TRAFFIC
- ARROW BOARD
- TEMPORARY TRAFFIC CONTROL SIGN AND SUPPORT
- * FROM PREVIOUS STAGE
- DIRECTIONAL INDICATOR BARRICADE WITH STEADY BURN MONODIRECTIONAL LIGHT

(E) EXISTING PAVEMENT MARKINGS
(R) PAVEMENT MARKING REMOVAL
(1) TEMP PVT MK - LINE 8": 9' SKIP, 3' DASH WHITE
(2) TEMP PVT MK - LINE 4": SOLID WHITE
(3) TEMP PVT MK - LINE 4": SOLID YELLOW
(4) TEMP PVT MK - LINE 5": 30' SKIP, 10' DASH WHITE
(5) TEMP PVT MK - LINE 8": SOLID WHITE
(6) TEMP PVT MK - LINE 12": SOLID WHITE, CHEVRONS AT 30'
(7) TEMP PVT MK - LINE 4": 30' SKIP, 10' DASH WHITE
(8) TEMP PVT MK - LINE 4": SOLID DOUBLE YELLOW 11" C-C
(9) TEMP PVT MK - LINE 6": SOLID WHITE
(10) TEMP PVT MK - LINE 24": SOLID WHITE
(11) TEMP PVT MK: WHITE LETTERS AND SYMBOLS
(12) TEMP PVT MK - LINE 12": SOLID YELLOW, SPACING PER STANDARD D1 TC-13
(13) TEMP PVT MK - LINE 4": 6' SKIP, 2' DASH WHITE
(14) TEMP PVT MK - LINE 6": 6' SKIP, 2' DASH WHITE

NOTE:
REFER TO PROPOSED TYPICAL SECTIONS FOR TEMPORARY PAVEMENT MARKING MATERIALS.

MODEL: Default
FILE NAME: pw://transystems-pw.bentley.com:transyscorp-pw1-hosted/Documents/Projects_2018/CH401/401180022/03-WSP/CAD/62R23-RB-1/Sheets/CivilD162R23-sht-EAST-MOTSstage3-substage-04.dgn

BURNS McDONNELL

USER NAME = USGP718052	DESIGNED - JAP	REVISED -	
	DRAWN - TMM	REVISED -	
PLOT SCALE = 100.000 ' / in.	CHECKED - JIR	REVISED -	
PLOT DATE = 11/6/2025	DATE - 11/7/2025	REVISED -	

STATE OF ILLINOIS
DEPARTMENT OF TRANSPORTATION

SUGGESTED STAGES OF CONSTRUCTION AND TRAFFIC CONTROL
STAGE 3 – SUBSTAGE

SCALE: 1" = 50' | SHEET 6 OF 8 SHEETS | STA. TO STA.

F.A.I. RTE.	SECTION	COUNTY	TOTAL SHEETS	SHEET NO.
80	FAI 80 21 STRUCTURE 2	WILL	1230	200
		CONTRACT NO. 62R23		
	ILLINOIS	FED. AID PROJECT		