TR	SECTION	COUNTY	TOTAL SHEETS	SHEET NO.
392	24-08117-00-BR	HANCOCK	28	1
		CONTRACT NO. 93845		

02-27-2026 LETTING ITEM 089

STATE OF ILLINOIS
DEPARTMENT OF TRANSPORTATION
DIVISION OF HIGHWAYS

PLANS FOR PROPOSED
LOCAL BRIDGE FORMULA PROGRAM

FOUNTAIN GREEN TOWNSHIP ROAD DISTRICT
HANCOCK COUNTY
SECTION 24–08117–00–BR
TR 392 (2980E)
PROJECT NUMBER YEHF(204)
JOB NUMBER C–96–003–27

INDEX OF SHEETS

1	COVER SHEET
2	SUMMARY OF QUANTITIES /GENERAL NOTES
3	SCHEDULE OF QUANTITIES
4	TYPICAL SECTIONS
5	HORIZONTAL CONTROL
6	PLAN AND PROFILE
7	TRAFFIC CONTROL PLAN
8–17	STRUCTURE PLANS
18–26	CROSS SECTIONS

ILLINOIS HIGHWAY STANDARDS

000001–09	665001–02	701901–11	BLR 21–9
280001–07	701001–02	725001–01	BLR 26–3
515001–04	701005–05	782006–01	BLR 27–1
542401–04			

DESIGN DESIGNATION

TR 392 (CR 2980E)
FUNCTIONAL CLASS: LOCAL
ADT = 25 (2023) 25 (2046)
DESIGN SPEED = 30 MPH

UTILITIES

DALLAS RURAL WATER DISTRICT
RODNEY PENCE
(309) 337–8435

McDONOUGH TELEPHONE COOPERATIVE
CLINT WISSLEAD
(309) 776–3211

WESTERN ILLINOIS ELECTRICAL COOPERATIVE
RYAN BIERY
(217) 357–3125

PROJECT DESRIPTION

Project consists of removing existing structure number 034–4242, a single–span steel modified warren pony truss on concrete pile caps and closed concrete abutments carrying TR 392 (2980E) over Baptist Creek. The back to back length is 55'–0" and the out to out width is 16'–0". New construction consists of a 21" PPC deck beam bridge on stub abutments and metal shell piling. Additional work includes AGG pavement, earth shoulders, guardrail, seeding, disposing of the concrete substructures, pipe culverts, riprap, and other miscellaneous items.

J.U.L.I.E.
JOINT UTILITY LOCATION INFORMATION FOR EXCAVATION
1–800–892–0123
OR 811

100' 200' 300' — 1" = 100'
0 10' 20' 30' — 1" = 10'
0 50' 100' — 1" = 50'
0 50' 100' — 1" = 40'
0 30' 60' — 1" = 30'
0 50' 100' — 1" = 20'

FULL SIZE PLANS HAVE BEEN PREPARED USING STANDARD ENGINEERING SCALES. REDUCED SIZED PLANS WILL NOT CONFORM TO STANDARD SCALES. IN MAKING MEASUREMENTS ON REDUCED PLANS, THE ABOVE SCALES MAY BE USED.

BEGIN STA. 1+00.00
PROPOSED S.N. 034–4243
STA. 3+00.00
ONE SPAN OVER BAPTIST CREEK
58'–0" BK TO BK ABUTMENTS
9–21" PPC DECK BEAMS
END STA 4+30.00

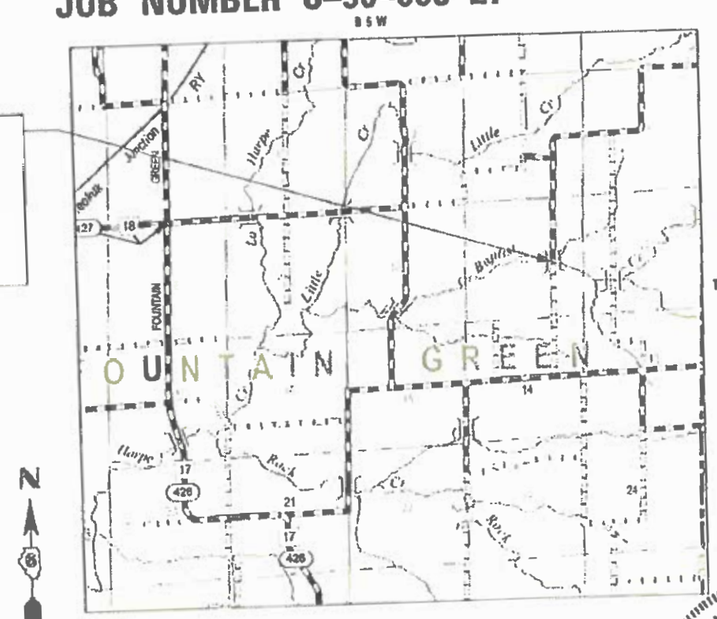

LOCATION MAP

SCALE: 1" = 2000'
GROSS /NET LENGTH OF SECTION = 330.00 FT. = 0.063 MILE

LOCATION OF SECTION INDICATED THUS:–

APPROVED 8/28 20 25
Elgin Berry
COUNTY ENGINEER

APPROVED 9/9/25 20
FOUNTAIN GREEN ROAD DISTRICT HIGHWAY COMMISSIONER

APPROVED October 28, 25
DISTRICT SIX ENGINEER OF LOCAL ROADS & STREETS

Releasing For Bid Based on Limited Review October 28, 20 25
Teresa C. Pearson
REGION FOUR ENGINEER

RYAN J. PHELPS
062.063007
REGISTERED PROFESSIONAL ENGINEER OF ILLINOIS

9-10-2025
RYAN J. PHELPS DATE
REGISTERED PROFESSIONAL ENGINEER
STATE OF ILLINOIS NO. 062–063007
LICENSE EXPIRES NOVEMBER 30, 2025

Plans prepared by:
KLINGNER & ASSOCIATES, P.C.
Engineers • Architects • Surveyors
Quincy, Illinois
618 North 24th Street
217 223 3670
www.klingner.com
Galesburg, IL Burlington, IA
Pella, IA Hannibal, MO Columbia, MO
IL DESIGN FIRM NO.: 1842738

SUMMARY OF QUANTITIES

	CODE NO.	ITEM	UNIT	TOTAL QUANTITY
	20100110	TREE REMOVAL (6 TO 15 UNITS DIAMETER)	UNIT	50
	20200100	EARTH EXCAVATION	CU YD	620
	20300100	CHANNEL EXCAVATION	CU YD	180
	21001000	GEOTECHNICAL FABRIC FOR GROUND STABILIZATION	SQ YD	605
	25000200	SEEDING, CLASS 2	ACRE	0.25
	25000400	NITROGEN FERTILIZER NUTRIENT	POUND	23
	25000500	PHOSPHORUS FERTILIZER NUTRIENT	POUND	23
	25000600	POTASSIUM FERTILIZER NUTRIENT	POUND	23
	25000700	AGRICULTURAL GROUND LIMESTONE	TON	0.5
	25100115	MULCH, METHOD 2	ACRE	0.25
	28000200	EARTH EXCAVATION FOR EROSION CONTROL	CU YD	25
	28000250	TEMPORARY EROSION CONTROL SEEDING	POUND	50
	28000315	AGGREGATE DITCH CHECKS	TON	10
	28000400	PERIMETER EROSION BARRIER	FOOT	425
	28000500	INLET AND PIPE PROTECTION	EACH	1
	28100209	STONE RIPRAP, CLASS A5	TON	1000
	28200200	FILTER FABRIC	SQ YD	700
	35101400	AGGREGATE BASE COURSE, TYPE B	TON	393
	40200800	AGGREGATE SURFACE COURSE, TYPE B	TON	100
	50100100	REMOVAL OF EXISTING STRUCTURES	EACH	1
	50200100	STRUCTURE EXCAVATION	CU YD	130
	50300225	CONCRETE STRUCTURES	CU YD	33.1
	50400405	PRECAST PRESTRESSED CONCRETE DECK BEAMS (21" DEPTH)	SQ FT	1510
	50800205	REINFORCEMENT BARS, EPOXY COATED	POUND	3580
#	50900205	STEEL RAILING, TYPE S1	FOOT	116
	51200957	FURNISHING METAL SHELL PILES 12" X 0.250"	FOOT	440
	51202305	DRIVING PILES	FOOT	440
	51203200	TEST PILE METAL SHELLS	EACH	2
	51500100	NAME PLATES	EACH	1
	54261772	STEEL FLARED END SECTIONS 72"	EACH	2
	542C1117	PIPE CULVERTS, CLASS C, TYPE 2 72"	FOOT	38
	58600101	GRANULAR BACKFILL FOR STRUCTURES	CU YD	52
#	63100075	TRAFFIC BARRIER TERMINAL, TYPE 5A	EACH	2
#	66500105	WOVEN WIRE FENCE, 4'	FOOT	251
	67100100	MOBILIZATION	L SUM	1
#	72501000	TERMINAL MARKER - DIRECT APPLIED	EACH	4
#	78200005	GUARDRAIL REFLECTORS, TYPE A	EACH	8
	Z0013798	CONSTRUCTION LAYOUT	L SUM	1
#	X6330725	STEEL PLATE BEAM GUARDRAIL (SHORT RADIUS)	FOOT	25.0
	X6640104	FENCE REMOVAL	FOOT	370
	X7011800	TRAFFIC CONTROL AND PROTECTION, STANDARD BLR 21	L SUM	1

SPECIALTY ITEM

GENERAL NOTES

1. THE NOMINAL THICKNESS FOR BASE AND SURFACE COURSES ARE SHOWN ON THE TYPICAL SECTIONS, STANDARDS, SCHEDULES, OR SPECIAL DETAILS. THE CONSTRUCTED THICKNESS OF THE ABOVE ITEMS SHALL NOT BE LESS THAN 90 PERCENT OF THE NOMINAL THICKNESS AT ANY LOCATION.
2. WHERE SECTION OR SUBSECTION MONUMENTS ARE ENCOUNTERED, THE ENGINEER SHALL BE NOTIFIED BEFORE SUCH MONUMENTS ARE REMOVED. THE CONTRACTOR SHALL PROTECT AND CAREFULLY PRESERVE ALL PROPERTY MARKERS AND MONUMENTS UNTIL THE OWNER AND AN AUTHORIZED SURVEYOR OR AGENT, HAS WITNESSED OR OTHERWISE REFERENCED THEIR LOCATION.
3. UTILITIES ARE SHOWN IN ACCORDANCE WITH THE BEST AVAILABLE INFORMATION, AND THEIR TRUE LOCATION IS NOT GUARANTEED TO BE AS SHOWN ON THE PLANS. IT WILL BE THE CONTRACTOR'S RESPONSIBILITY TO DETERMINE THE EXACT LOCATION OF ALL UTILITIES AND CARRY OUT HIS OR HER OPERATIONS ACCORDINGLY.
4. ADJUSTMENTS OF UTILITY LOCATIONS SHALL BE MADE BY THE OWNER, UNLESS OTHERWISE NOTED.
5. ANY REFERENCE TO A STANDARD IN THESE PLANS SHALL BE INTERPRETED TO MEAN THE EDITION, AS INDICATED BY THE SUB-NUMBER ON THE COVER SHEET.
6. ALL DETAILS IN THESE PLANS SHALL GOVERN THE CONSTRUCTION OF THIS PROJECT, AND IN CASE OF CONFLICT WITH ANY STANDARD DRAWINGS INCLUDED, THE SAID DETAILS SHALL GOVERN.
7. THE EXISTING ROAD SIGNS THAT INTERFERE WITH CONSTRUCTION SHALL BE REMOVED AND RELOCATED AS DIRECTED BY THE ENGINEER. THIS WORK WILL NOT BE PAID FOR SEPARATELY BUT SHALL BE CONSIDERED AS PART OF THE CONTRACT AND NO COMPENSATION WILL BE ALLOWED.
8. IN ACCORDANCE WITH STATE OF ILLINOIS P.A. 86-0674, THE CONTRACTOR IS TO NOTIFY ALL UTILITY COMPANIES NOT MORE THAN 14 DAYS NOR LESS THAN 48 HOURS (EXCLUSIVE OF SATURDAYS, SUNDAYS, AND HOLIDAYS) IN ADVANCE OF THE START OF EXCAVATION OR DEMOLITION.

J.U.L.I.E TELEPHONE NUMBER
1-800-892-0123

RATES OF APPLICATION TABLE

AGGREGATE (SURFACE, BASE, OR BACKFILL)	2.05 TON/CU YD
STONE RIPRAP	1.75 TON/CU YD
SEEDING AREAS:	
NITROGEN FERTILIZER NUTRIENT	90 LBS/ACRE
PHOSPHOROUS FERTILIZER NUTRIENT	90 LBS/ACRE
POTASSIUM FERTILIZER NUTRIENT	90 LBS/ACRE
AGRICULTURAL GROUND LIMESTONE	2 TON/ACRE
MULCH	2 TON/ACRE
TEMPORARY EROSION CONTROL SEEDING	100 LBS/ACRE

SEEDING SCHEDULE

ITEM	UNIT	TOTAL
SEEDING, CLASS 2	ACRE	0.25
NITROGEN FERTILIZER NUTRIENT	POUND	23
PHOSPHORUS FERTILIZER NUTRIENT	POUND	23
POTASSIUM FERTILIZER NUTRIENT	POUND	23
AGRICULTURAL GROUND LIMESTONE	TON	0.5
MULCH, METHOD 2	ACRE	0.25

EROSION CONTROL SCHEDULE

ITEM	UNIT	TOTAL
EARTH EXCAVATION FOR EROSION CONTROL	CU YD	25
TEMPORARY EROSION CONTROL SEEDING	POUND	50
AGGREGATE DITCH CHECKS	TON	10
PERIMETER EROSION BARRIER	FOOT	425
INLET AND PIPE PROTECTION	EACH	1

TREE REMOVAL SCHEDULE

STATION	SIDE	OFFSET	6 TO 15 UNITS DIAMETER
			UNIT
TR 392 (2980E)			
3+23.8	LT	20.2	10
3+26.7	LT	23.0	10
3+35.2	LT	33.6	10
3+36.9	LT	37.8	10
3+40.9	LT	31.8	10
TOTALS			50

EARTH EXCAVATION SCHEDULE

LOCATION STATION TO STATION		SIDE	EARTH EXCAVATION	EARTH EXCAVATION ADJUSTED (25%)	EMBANKMENT	EARTHWORK BALANCE
			CU YD			
TR 392 (2980E)						
1+00	4+30	LT & RT	620	465	120	345
TOTALS			620	465	120	345
USE			620	465	120	345

ROADWAY SURFACE SCHEDULE

LOCATION STATION TO STATION		SIDE	SURFACE WIDTH	GEOTECH FABRIC	AGGREGATE BASE COURSE TYPE B
				SQ YD	TON
TR 392 (2980E)					
1+00.0	2+71.0	LT & RT	18.0	380.0	246.7
3+29.0	4+30.0	LT & RT	18.0	224.4	145.7
TOTALS				604.4	392.4
USE				605	393

GUARDRAIL SCHEDULE

STATION TO STATION		SIDE	SPBGR SHORT RADIUS	TRAFFIC BARRIER TERMINAL TYPE 5A	GUARDRAIL REFLECTORS TYPE A	TERMINAL MARKERS DIRECT APPLIED
			FOOT	EACH		
TR 392 (2980E)						
2+45.7	2+67.4	RT	12.5	1	4	1
2+54.1	3+54.3	LT	12.5	1	4	1
2+72.8		LT				1
3+27.2		RT				1
TOTALS			25.0	2	8	4

RIPRAP SCHEDULE

LOCATION STATION TO STATION		SIDE	STONE RIPRAP CLASS A5	FILTER FABRIC
			TON	SQ YD
TR 392 (2980E)				
2+71.0	3+29.0	LT & RT	585.2	317.2
3+29.0	4+30.0	LT & RT	375.1	350.8
TOTALS			960.4	668.0
USE			1000	700

ENTRANCE SCHEDULE

STATION	SIDE	TYPE	AGGREGATE SURFACE COURSE TYPE B
			TON
TR 392 (2980E)			
2+35.0	RT	FE	25.9
2+55.0	LT	FE	15.2
3+69.0	LT	FE	19.0
3+75.0	RT	FE	39.8
TOTAL			100.0
USE			100

PIPE CULVERT SCHEDULE

STATION	SIDE	PIPE CULVERT CL C, TY 2 72"	STEEL FLARED END SECTIONS 72"
		FOOT	EACH
TR 392 (2980E)			
3+75.0	RT	38.0	2
TOTALS		38	2

FENCING SCHEDULE

LOCATION DESCRIPTION	LOCATION STATION	OFFSET	SIDE	WOVEN WIRE FENCE, 4'	FENCE REMOVAL	COMMENTS
				FOOT		
TR 392 (2980E)						
END POST WITH 1-BRACE	1+25	20.00'	RT			
CORNER POST WITH 2-BRACES	2+00	20.00'	RT	75	75	
GATE POST WITH 1-BRACE	2+27	34.00'	RT	30	27	
GATE POST WITH 1-BRACE	2+43	34.00'	RT		16	16' GATE (BY OTHERS)
END POST WITH 1-BRACE	2+55	36.59'	RT	12	12	
END POST WITH 1-BRACE	3+10	55.00'	RT		55	55' FLOOD GAP (BY OTHERS)
GATE POST WITH 1-BRACE	3+67	50.00'	RT	57	57	
GATE POST WITH 1-BRACE	2+83	50.00'	RT		16	16' GATE (BY OTHERS)
END POST WITH 1-BRACE	4+60	49.14'	RT	77	77	
REMOVAL ONLY	3+50	VARIES	LT			
REMOVAL ONLY	3+60	VARIES	LT		20	
REMOVAL ONLY	3+75	VARIES	LT			
REMOVAL ONLY	3+90	VARIES	LT		15	
TOTAL				251	370	

P:\Quincy\23files\23035\18.Transportation\CADD Sheets\Sht-Schedule.dgn

KLINGNER & ASSOCIATES, P.C.
Engineers • Architects • Surveyors
616 N.24TH ST. QUINCY, ILLINOIS 62301 217.223.3670
STATE OF ILLINOIS DESIGN FIRM NO. 184-2738

USER NAME = rjp	DESIGNED - RJP	REVISED -	
	DRAWN - RJP	REVISED -	
PLOT SCALE = 40.0000 ' / in.	CHECKED - EBB	REVISED -	
PLOT DATE = 7/28/2025	DATE -	REVISED -	

HANCOCK COUNTY HIGHWAY DEPARTMENT

TR 392 (2980E) OVER BAPTIST CREEK
SCHEDULE OF QUANTITIES

SCALE: NONE | SHEET 1 OF 1 SHEETS | STA. TO STA.

T.R. RTE.	SECTION	COUNTY	TOTAL SHEETS	SHEET NO.
392	24-08117-00-BR	HANCOCK	26	3

CONTRACT NO. 93845

ILLINOIS FED. AID PROJECT

LEGEND

(E1) EXISTING AGGREGATE / BROKEN HMA PAVEMENT

(1) PROPOSED AGGREGATE BASE COURSE, TYPE B, 12"
(2) PROPOSED GEOTECHNICAL FABRIC
(3) PROPOSED EARTH SHOULDER
(4) PROPOSED RIPRAP (SEE PLAN SHEET)

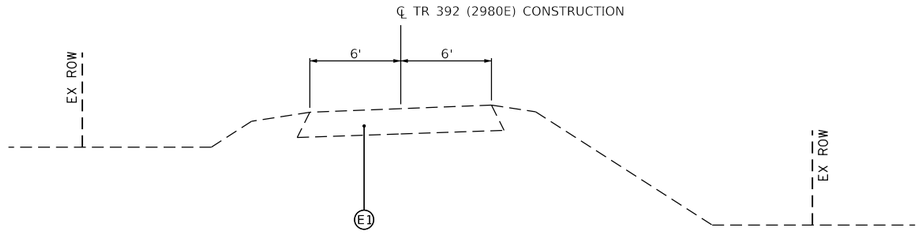

EXISTING TR 392 (2980E) TYPICAL SECTION

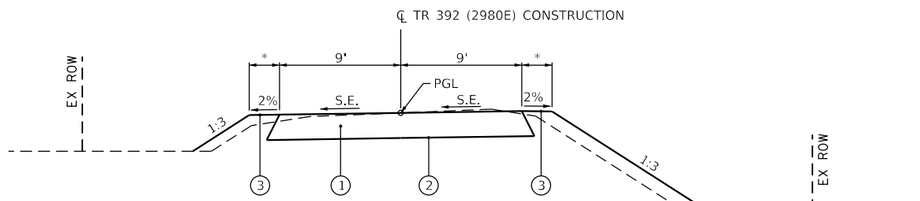

* 2' FROM STA 1+00.0 TO STA 2+25.0 (LT & RT)
VARIES 2' AT STA 2+25.0 TO 5'-6" AT BRIDGE (LT & RT)

PROPOSED TR 392 (2980E) TYPICAL SECTION

STA 1+00.0 TO STA 2+12.0 (LT S.E. = 1.6%)
STA 2+12.0 TO STA 2+65.0 (S.E. TRANSITION)

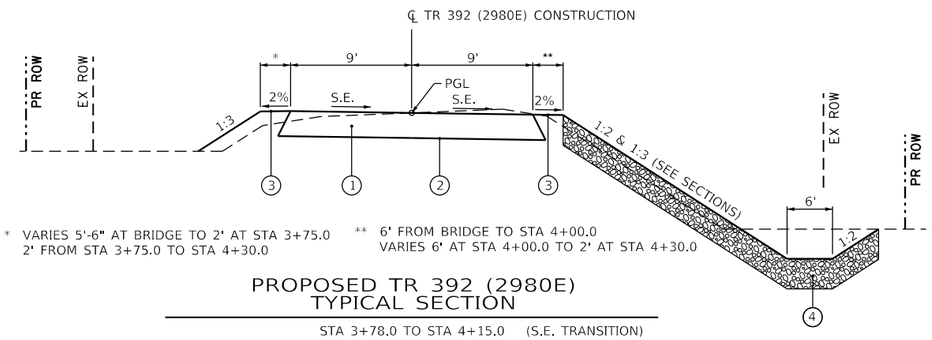

* VARIES 5'-6" AT BRIDGE TO 2' AT STA 3+75.0
2' FROM STA 3+75.0 TO STA 4+30.0

** 6' FROM BRIDGE TO STA 4+00.0
VARIES 6' AT STA 4+00.0 TO 2' AT STA 4+30.0

PROPOSED TR 392 (2980E) TYPICAL SECTION

STA 3+78.0 TO STA 4+15.0 (S.E. TRANSITION)
STA 4+15.0 TO STA 4+30.0 (RT S.E. = 0.5%)

NOTE: SEE CROSS SECTIONS FOR DITCH SECTIONS.

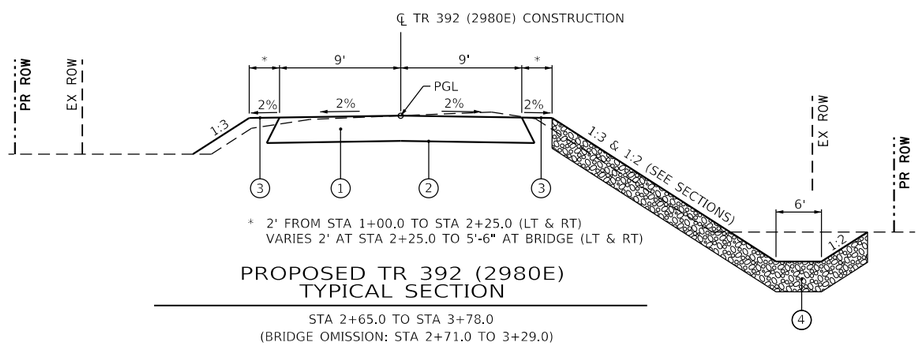

* 2' FROM STA 1+00.0 TO STA 2+25.0 (LT & RT)
VARIES 2' AT STA 2+25.0 TO 5'-6" AT BRIDGE (LT & RT)

PROPOSED TR 392 (2980E) TYPICAL SECTION

STA 2+65.0 TO STA 3+78.0
(BRIDGE OMISSION: STA 2+71.0 TO 3+29.0)
NOTE: SEE CROSS SECTIONS FOR DITCH SECTIONS.

SUPERELEVATION TRANSITION TABLE

EXISTING CURVE 1					
STATION	LEFT EDGE 9'	SLOPE %	CL	SLOPE %	RIGHT EDGE 9'
2+12.0	606.33	-1.60	606.47	1.60	606.61
2+25.0	606.31	-1.60	606.45	0.72	606.52
2+50.0	606.28	-1.60	606.42	-0.98	606.33
2+59.0	606.26	-1.60	606.41	-1.59	606.27
2+65.0	606.22	-2.00	606.40	-2.00	606.22

SUPERELEVATION TRANSITION TABLE

EXISTING CURVE 2					
STATION	LEFT EDGE 9'	SLOPE %	CL	SLOPE %	RIGHT EDGE 9'
3+78.0	606.08	-2.00	606.26	-2.00	606.08
3+93.0	606.15	-0.99	606.24	-2.00	606.06
4+00.0	606.18	-0.51	606.23	-0.99	606.14
4+15.0	606.25	0.50	606.21	-0.50	606.16

P:\Quincy\23files\230365\18.Transportation\CADD Sheets\Sht-Typical.dgn

EXIST. CURVE CUR_1
PI STA. = 1+15.77
Δ = 25° 36′ 45″ (LT)
D = 11° 15′ 00″
R = 509.30′
T = 115.77′
L = 227.67′
E = 12.99′
e = 1.6%
T.R. = -----
S.E. RUN = -----
P.C. STA. = 0+00.00
P.T. STA. = 2+27.67
S.E. ATTAINED: STA. 2+12.0 TO STA. 2+65.0

EXIST. CURVE CUR_2
PI STA. = 4+60.50
Δ = 4° 58′ 14″ (RT)
D = 4° 30′ 00″
R = 1,273.24′
T = 55.26′
L = 110.46′
E = 1.20′
e = 0.5%
T.R. = -----
S.E. RUN = -----
P.C. STA. = 4+05.24
P.T. STA. = 5+15.69
S.E. REMOVED: STA. 3+78.0 TO STA. 4+15.0

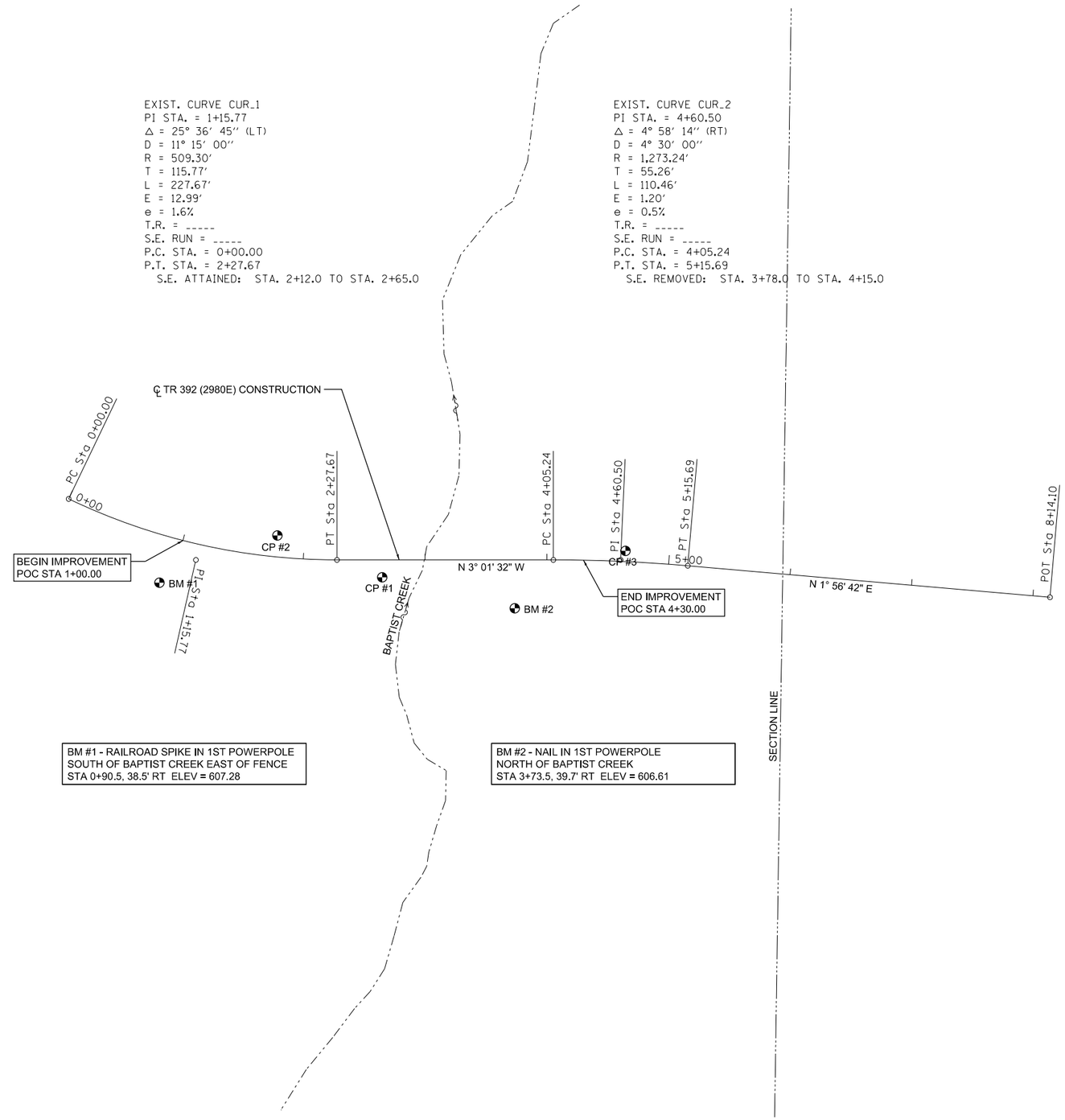

ALIGNMENT COORDINATES - TR 392 (2980E)			
	STATION	NORTHING	EASTING
PC	0+00.00	1,406,475.7394	2,084,238.8809
PI	1+15.77	1,406,582.6273	2,084,283.3454
PT	2+27.67	1,406,698.2335	2,084,277.2350
PC	4+05.24	1,406,875.5564	2,084,267.8626
PI	4+60.50	1,406,930.7426	2,084,264.9458
PT	5+15.69	1,406,985.9740	2,084,266.8214
POT	8+14.10	1,407,284.2100	2,084,276.9495

CONTROL POINT COORDINATES - TR 392 (2980E)		
CONTROL POINT #	NORTHING	EASTING
1	1,406,736.0500	2,084,289.5260
2	1,406,648.3578	2,084,259.8411
3	1,406,934.3360	2,084,257.3790

P:\Quincy\23Files\238365\18.Transportation\CADD Sheets\Sht-Alignment.dgn

KLINGNER & ASSOCIATES, P.C.
Engineers • Architects • Surveyors
616 N.24TH ST. QUINCY, ILLINOIS 62301 217.223.3670
STATE OF ILLINOIS DESIGN FIRM NO. 184-2738

USER NAME = rjp	DESIGNED - RJP	REVISED -	
	DRAWN - RJP	REVISED -	
PLOT SCALE = 100.0000 ' / in.	CHECKED - EBB	REVISED -	
PLOT DATE = 7/28/2025	DATE -	REVISED -	

HANCOCK COUNTY
HIGHWAY DEPARTMENT

TR 392 (2980E) OVER BAPTIST CREEK
HORIZONTAL CONTROL

SCALE: 1"=50' | SHEET 1 OF 1 SHEETS | STA. 0+00.00 TO STA. 8+14.10

T.R. RTE.	SECTION	COUNTY	TOTAL SHEETS	SHEET NO.
392	24-08117-00-BR	HANCOCK	26	5

CONTRACT NO. 93845
ILLINOIS FED. AID PROJECT

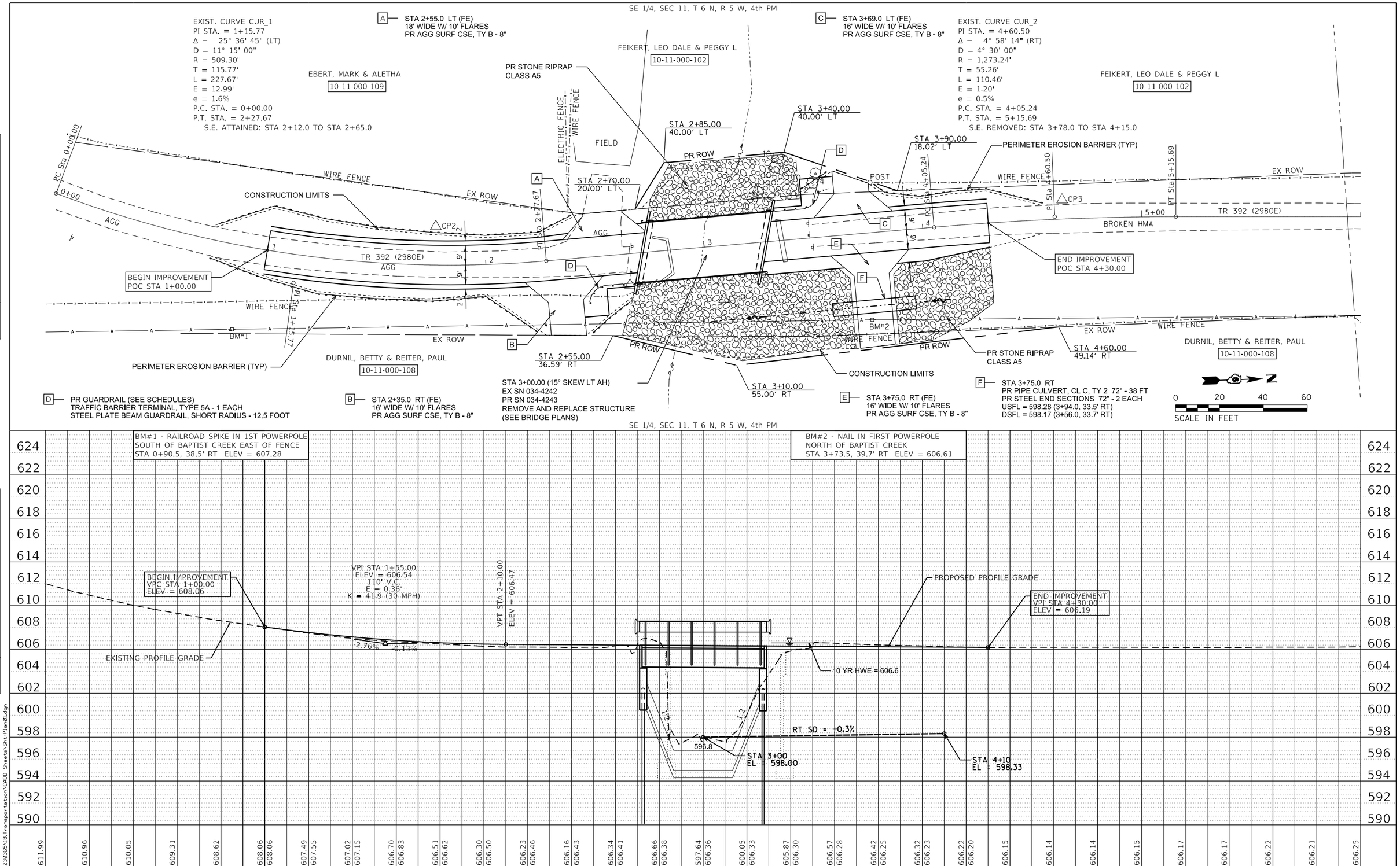

PLAN — SURVEYED / PLOTTED / ALIGNMENT CHECKED / RT. OF WAY CHECKED / CADD FILE NAME — NOTE BOOK NO. — BY — DATE

PROFILE — SURVEYED / PLOTTED / GRADES CHECKED / BM. NOTED / STRUCTURE NOTATNS CHKD — NOTE BOOK NO. — BY — DATE

P:\Quincy\23Files\230365\18.Transportation\CADD Sheets\Sht-Plan01.dgn

KLINGNER & ASSOCIATES, P.C. Engineers • Architects • Surveyors 616 N.24TH ST. QUINCY, ILLINOIS 62301 217.223.3670 STATE OF ILLINOIS DESIGN FIRM NO. 184-2738	USER NAME = rjp	DESIGNED - RJP	REVISED -
	PLOT SCALE = 40.0000 ' / in.	DRAWN - RJP	REVISED -
	PLOT DATE = 8/27/2025	CHECKED - EBB	REVISED -
		DATE -	REVISED -

HANCOCK COUNTY HIGHWAY DEPARTMENT

TR 392 (2980E) OVER BAPTIST CREEK
PLAN & PROFILE SHEET

SCALE: 1" = 20' | SHEET 1 OF 1 SHEETS | STA. 0+00 TO STA. 6+00

T.R. RTE.	SECTION	COUNTY	TOTAL SHEETS	SHEET NO.
392	24-08117-00-BR	HANCOCK	26	6

CONTRACT NO. 93845

ILLINOIS FED. AID PROJECT

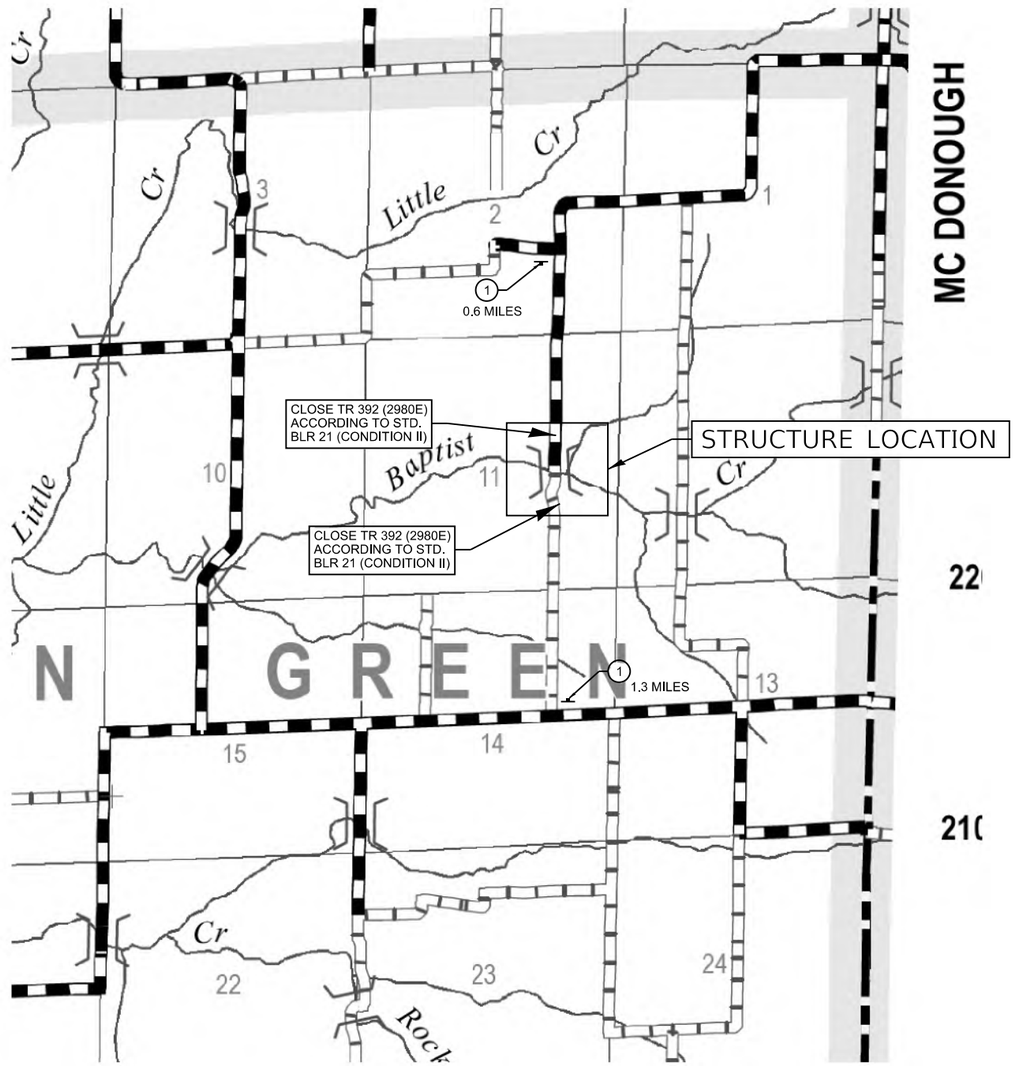

TRAFFIC CONTROL PLAN

GENERAL NOTES

1) ROAD CLOSURE IN ACCORDANCE WITH TRAFFIC CONTROL AND PROTECTION STANDARD BLR-21 ALONG WITH THE DETAILS AND SPECIAL PROVISIONS.

2) ALL SIGNS SHALL BE FURNISHED, ERECTED, AND MAINTAINED BY THE CONTRACTOR.

3) THE LONGITUDINAL DIMENSIONS MAY BE ADJUSTED TO FIT FIELD CONDITIONS.

4) ALL SIGNS SHALL BE REMOVED WHEN NOT REQUIRED FOR FUTURE USE.

5) THIS TRAFFIC CONTROL AND PROTECTION SHALL BE PAID FOR ACCORDING TO THE CONTRACT UNIT COST PER LUMP SUM FOR TRAFFIC CONTROL AND PROTECTION, STANDARD BLR 21.

6) THE EXACT LOCATIONS OF ALL TRAFFIC CONTROL ITEMS SHALL BE APPROVED BY THE ENGINEER.

ROAD CLOSED
XX MILES AHEAD
LOCAL TRAFFIC ONLY

1 R11-3a (6030) (O)

N

3000 1500 0 3000
GRAPHIC SCALE (IN FEET)
SCALE: 1"=1,500'

P:\Quincy\23files\230365\18.Transportation\CADD Sheets\Sht-TC&P.dgn

KLINGNER & ASSOCIATES, P.C. Engineers • Architects • Surveyors 616 N.24TH ST. QUINCY, ILLINOIS 62301 217.223.3670 STATE OF ILLINOIS DESIGN FIRM NO. 184-2738	USER NAME = rjp	DESIGNED - RJP	REVISED -	HANCOCK COUNTY HIGHWAY DEPARTMENT	TR 392 (2980E) OVER BAPTIST CREEK TRAFFIC CONTROL PLAN	T.R. RTE.	SECTION	COUNTY	TOTAL SHEETS / SHEET NO.
		DRAWN - RJP	REVISED -			392	24-08117-00-BR	HANCOCK	26 / 7
	PLOT SCALE = 10.0000 ' / in.	CHECKED - EBB	REVISED -					CONTRACT NO. 93845	
	PLOT DATE = 7/28/2025	DATE -	REVISED -		SCALE: 1"=1500' SHEET 1 OF 1 SHEETS STA. TO STA.		ILLINOIS FED. AID PROJECT		

Bench Mark: Railroad spike in first power pole south of Baptist Creek, east of fence, Sta. 0+90.5, 38.5' Rt., NAVD 88
Elev. 607.28.

Existing Structure: Structure Number 034-4242 was originally built in 1960 in Hancock County. The structure consists of a steel modified warren pony truss on concrete pile caps and closed concrete abutments. The back-to-back abutment length is 55'-0" and the out-to-out bridge width is 16'-0", 14'-0" between trusses.

The existing structure shall be removed and replaced. The roadway will be closed and traffic detoured during construction.

No salvage.

INDEX OF SHEETS

1	General Plan & Elevation
2	General Notes and Details
3	21" x 36" PPC Deck Beam
4	21" x 36" PPC Deck Beam Details
5	Steel Railing, Type S-1
6	South Abutment
7	North Abutment
8	Metal Shell Pile Details
9-10	Boring Logs

TOTAL BILL OF MATERIAL

ITEM	UNIT	SUPER	SUB	TOTAL
Channel Excavation	Cu. Yd.		180	180
Removal of Existing Structures	Each			1
Structure Excavation	Cu. Yd.		130	130
Concrete Structures	Cu. Yd.		33.1	33.1
Precast Prestressed Concrete Deck Beams (21" Depth)	Sq. Ft.	1,510		1,510
Reinforcement Bars, Epoxy Coated	Pound		3,580	3,580
Steel Railing, Type S1	Foot	116		116
Furnishing Metal Shell Piles 12" x 0.250"	Foot		440	440
Driving Piles	Foot		440	440
Test Pile Metal Shells	Each		2	2
Name Plates	Each	1		1
Granular Backfill for Structures	Cu. Yd.		52	52

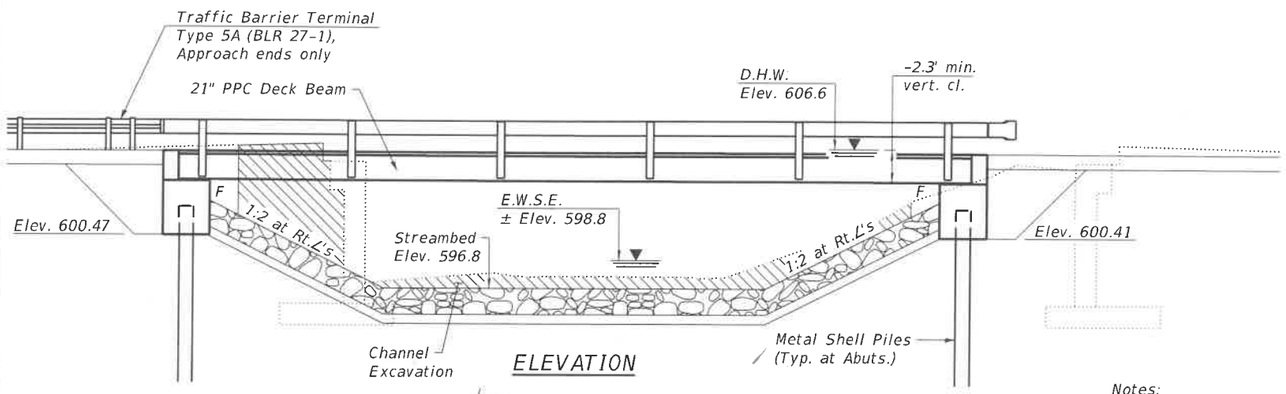

ELEVATION

Notes:
See Sheet 2 of 10 for Section A-A.
The existing truss has been removed prior to construction.

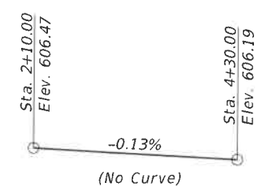

PROFILE GRADE
(Along ℄ Roadway T.R. 392)

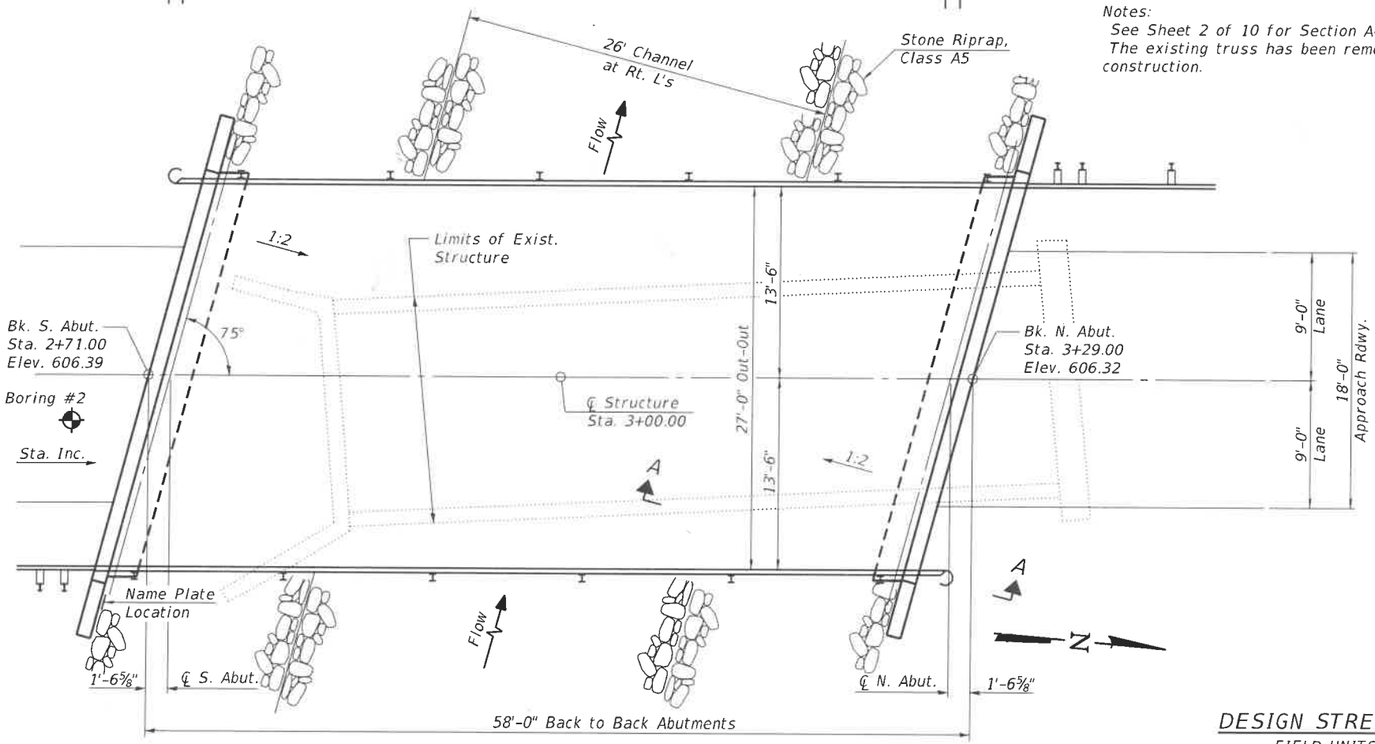

PLAN

AARON M. SCHAFER
081-007926
LICENSED
STRUCTURAL
ENGINEER
STATE OF ILLINOIS

9/10/2025

Aaron M. Schafer — Date
Licensed Structural Engineer
State of Illinois No. 081-007926
License Expires 11/30/2026

I certify that to the best of my knowledge, information and belief, this bridge design is structurally adequate for the design loading shown on the plans. The design is an economical one for the style of structure and complies with requirements of the current "AASHTO LRFD Specifications for Highway Bridges".

SEISMIC DATA

Seismic Performance Zone (SPZ) = 1
Design Spectral Acceleration at 1.0 sec. (SD1) = 0.11g
Design Spectral Acceleration at 0.2 sec. (SDS) = 0.16g
Soil Site Class = D

LOADING HL-93

Allow 50#/sq. ft. for future wearing surface.

DESIGN SPECIFICATIONS

2020 AASHTO LRFD Bridge Design Specifications, 9th Edition

DESIGN STRESSES

FIELD UNITS

f'c = 3,500 psi
fy = 60,000 psi (Reinforcement)

PRECAST PRESTRESSED UNITS

f'c = 6,000 psi
f'ci = 5,000 psi
fpu = 270,000 psi (½" dia. low lax. strands)
fpbt = 201,690 psi (½" dia. low lax. strands)

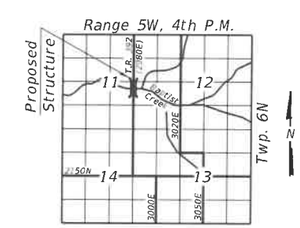

LOCATION SKETCH

GENERAL PLAN & ELEVATION
T.R. 392 (2980E) OVER BAPTIST CREEK
SECTION 24-08117-00-BR
HANCOCK COUNTY
STATION 3+00.00
STRUCTURE NO. 034-4243

KLINGNER & ASSOCIATES, P.C. Engineers • Architects • Surveyors 516 N. 24TH ST. QUINCY, ILLINOIS 62301 (217) 223-3570 STATE OF ILLINOIS DESIGN FIRM NO. 184-2738	USER NAME = rjp	DESIGNED - RJP	REVISED -
		CHECKED - AMS	REVISED -
	PLOT SCALE = 1.333333 ' / in.	DRAWN - RJP	REVISED -
	PLOT DATE = 6/24/2025	CHECKED - AMS	REVISED -

HANCOCK COUNTY
HIGHWAY DEPARTMENT

GENERAL PLAN & ELEVATION
STRUCTURE NO. 034-4243
SHEET NO. 1 OF 10 SHEETS

T.R.	SECTION	COUNTY	TOTAL SHEETS	SHEET NO.
392	24-08117-00-BR	HANCOCK	26	8

CONTRACT NO. 93845
ILLINOIS FED. AID PROJECT

P:\Quincy\23Files\230385\18_Transportation\Structure Plans\Final Bridge Plans.dgn

GENERAL NOTES

Reinforcement bars designated (E) shall be epoxy coated.

Layout of the slope protection system may be varied to suit ground conditions in the field as directed by the Engineer.

See Roadway Plans for full riprap layout and quantity.

BAPTIST CREEK
BUILT 202_ BY
FOUNTAIN GREEN ROAD DISTRICT
HANCOCK COUNTY
SEC. 24-08117-00-BR
STATION 3+00.00
STR. NO. 034-4243 LOADING HL-93

NAME PLATE

See Std. 515001

WATERWAY INFORMATION

Drainage Area = 18.9 Sq. Mi.

Exist. Overtopping Elev. 606.1 @ Sta. 4+70
Prop. Overtopping Elev. 606.1 @ Sta. 4+70

Flood Event	Freq. Yr.	Discharge C.F.S.	Opening Sq. Ft. Exist.	Opening Sq. Ft. Prop.	Natural H.W.E. Ft.	Head - Ft. Exist.	Head - Ft. Prop.	Headwater El. Ft. Exist.	Headwater El. Ft. Prop.
Design	10	2,450	292	314	606.6	0.4	0.4	607.0	607.0
Base	100	4,720	292	314	607.4	0.6	0.6	608.0	608.0
Scour Design	200	5,440	292	314	607.6	0.6	0.6	608.2	608.2
Overtop Exist.	5	1,820	292	314	606.4	0.4	0.4	606.8	606.8
Overtop Prop.	5	1,820	292	314	606.4	0.4	0.4	606.8	606.8
Max. Calc.	500	6,420	292	314	607.9	0.7	0.6	608.6	608.5

10 year velocity through proposed bridge = 5.2 ft./sec.

DESIGN SCOUR ELEVATION TABLE

Event / Limit State	Design Scour Elevations (ft.) S. Abut.	N. Abut.	Item 113
Q100	600.47	600.41	8
Q200	600.47	600.41	
Design	600.47	600.41	
Check	600.47	600.41	

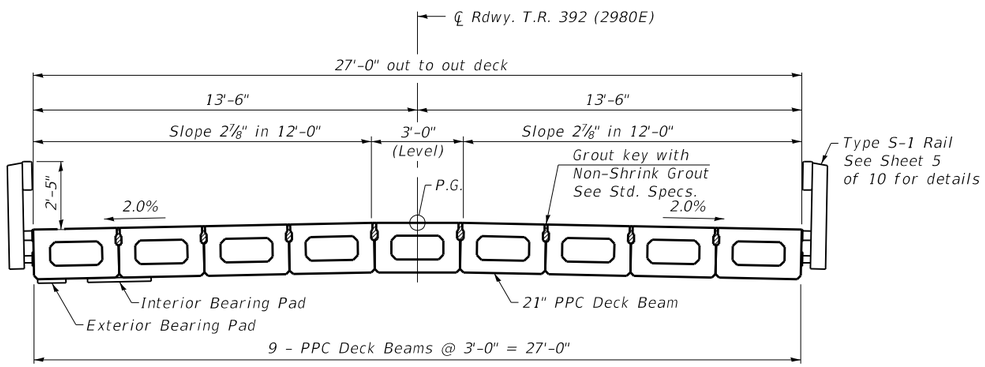

SECTION THRU DECK

(Looking North)

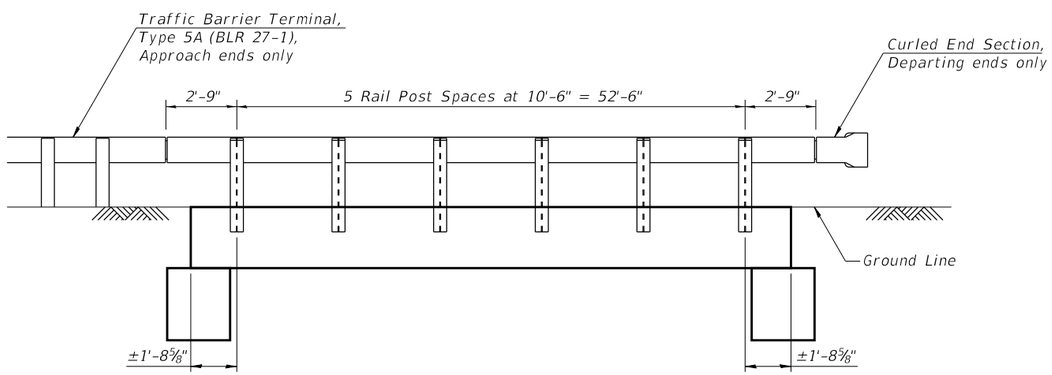

RAIL POST SPACING

(Looking West)

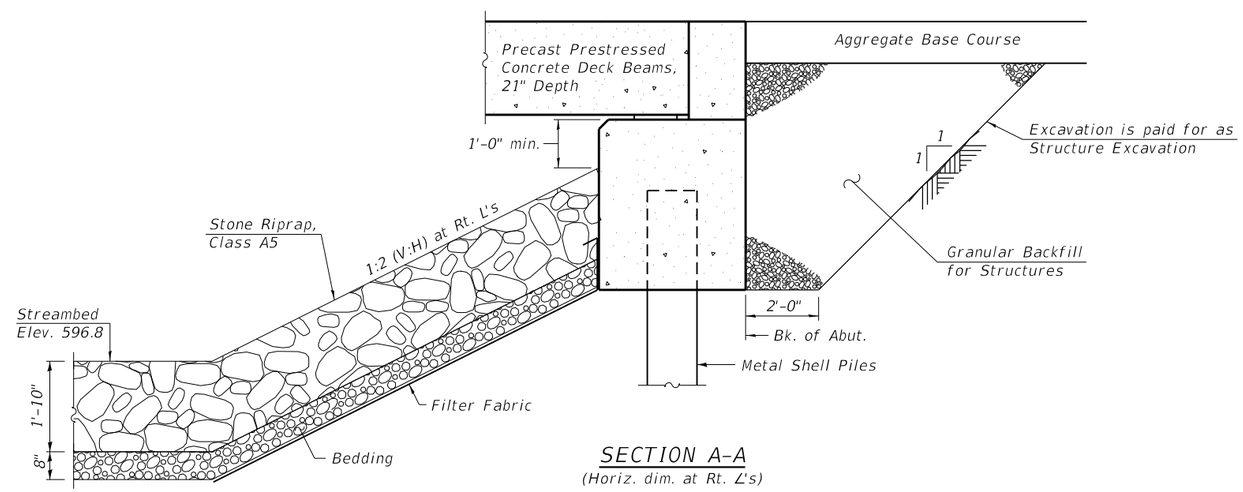

SECTION A-A

(Horiz. dim. at Rt. L's)

Note:
54 Tons Granular Backfill estimated per abutment for a plan quantity of 26 cubic yards per abutment.

P:\Quincy\23files\230385\18.Transportation\Structure Plans\Final Bridge Plans.dgn

KLINGNER & ASSOCIATES, P.C. Engineers • Architects • Surveyors 616 N.24TH ST., QUINCY, ILLINOIS 62301 217.223.3670 STATE OF ILLINOIS DESIGN FIRM NO. 184-2738	USER NAME = rjp	DESIGNED - RJP	REVISED -
		CHECKED - AMS	REVISED -
	PLOT SCALE = 1.333333 ' / in.	DRAWN - RJP	REVISED -
	PLOT DATE = 6/24/2025	CHECKED - AMS	REVISED -

HANCOCK COUNTY
HIGHWAY DEPARTMENT

GENERAL NOTES & DETAILS
STRUCTURE NO. 034-4243

SHEET NO. 2 OF 10 SHEETS

T.R.	SECTION	COUNTY	TOTAL SHEETS	SHEET NO.
392	24-08117-00-BR	HANCOCK	26	9

CONTRACT NO. 93845

ILLINOIS FED. AID PROJECT

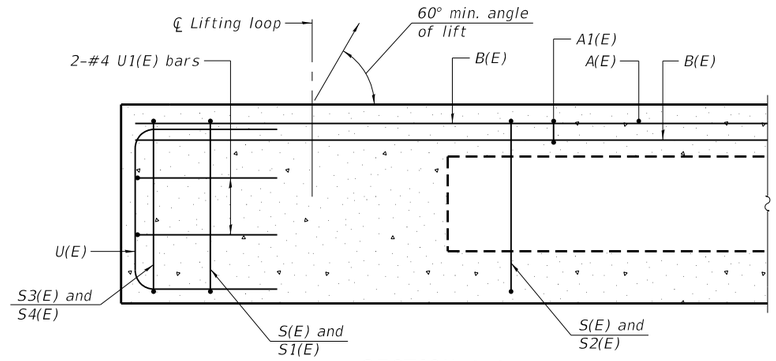

SECTION A-A

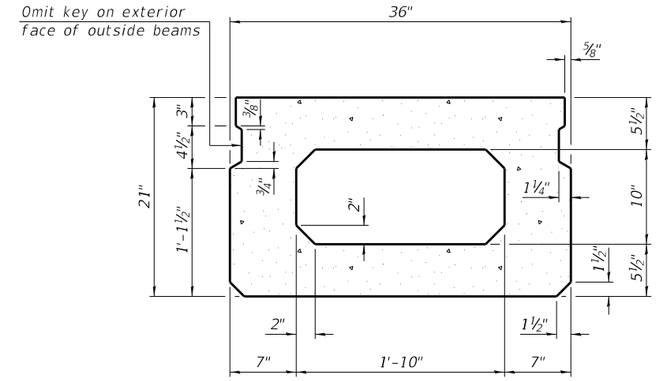

SECTION B-B
(Showing dimensions)

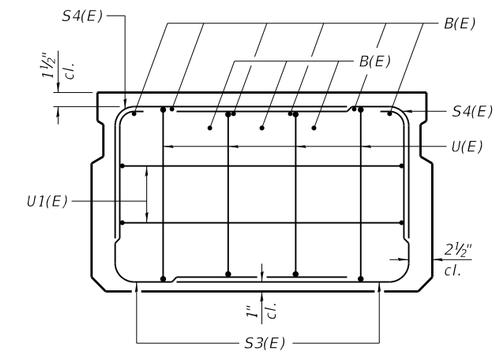

VIEW C-C

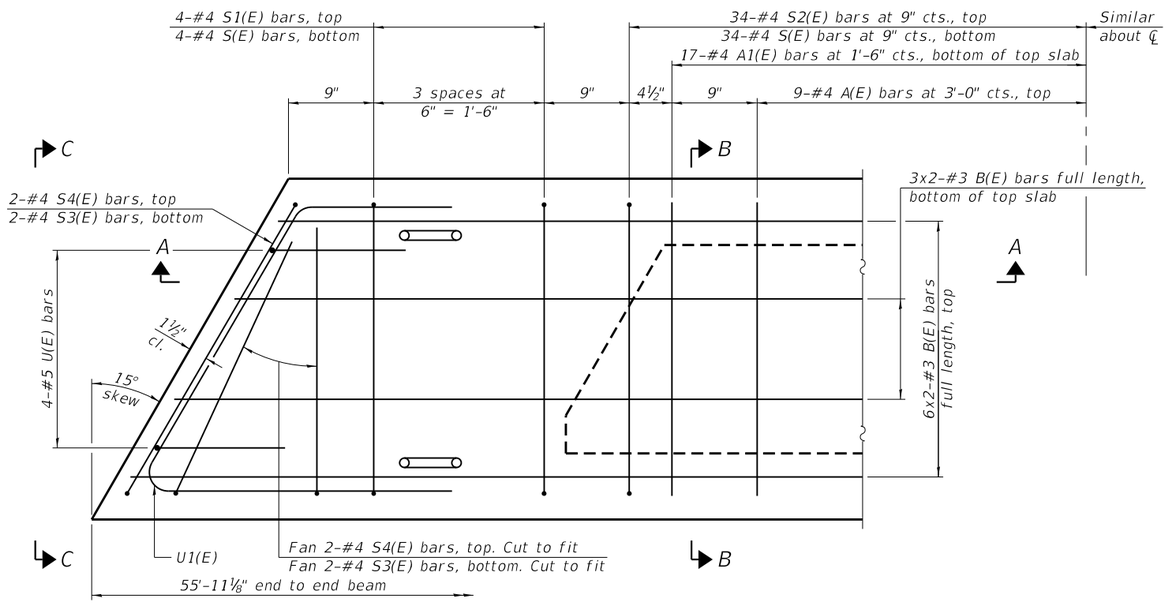

PLAN VIEW

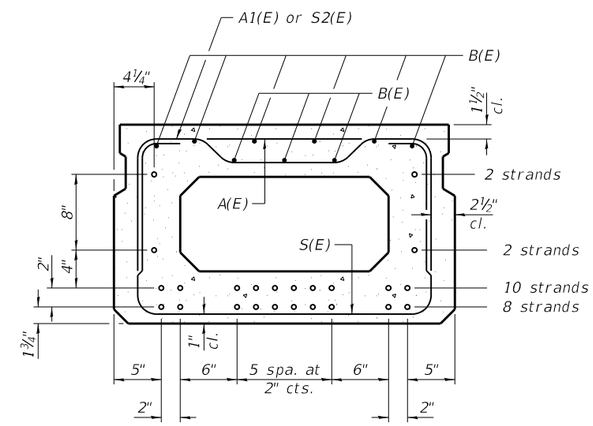

SECTION B-B
(Showing reinforcement and permissible strand locations)

Note:
Place the number of strands specified in each row symmetrically about the centerline of beam in the permissible strand locations shown.

BAR LIST
ONE BEAM ONLY
(For information only)

Bar	No.	Size	Length	Shape
A(E)	18	#4	2'-7"	—
A1(E)	34	#4	2'-10"	~
B(E)	18	#3	28'-8"	—
S(E)	76	#4	6'-5"	⊔
S1(E)	8	#4	4'-11"	⊓
S2(E)	68	#4	5'-2"	⊓
S3(E)	8	#4	4'-5"	⊔
S4(E)	8	#4	3'-8"	⊔
U(E)	8	#5	4'-0"	⊏
U1(E)	4	#4	5'-9"	⊏

Note:
See sheet 4 of 10 for additional details and Bill of Material.

Notes:
Spacing of S(E) and S2(E) bars may be adjusted up to 4" in the immediate area of the transverse tie diaphragms to miss the block outs for the transverse ties.
Bars indicated thus 6x2-#3 etc. indicates 6 lines of bars with 2 lengths per line.

MINIMUM BAR LAP
#3 bar = 1'-6"

P:\Quincy\23files\230385\18.Transportation\Structure Plans\Final Bridge Plans.dgn

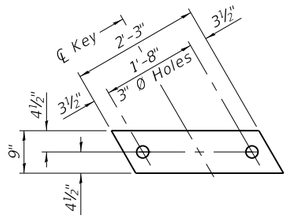

FABRIC BEARING PAD
(Interior)

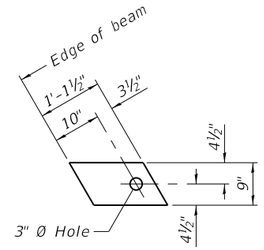

FABRIC BEARING PAD
(Exterior)

FIXED

Note:
All bearing pads shall be 1" thick.

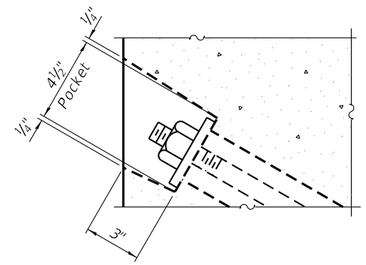

SECTION A-A

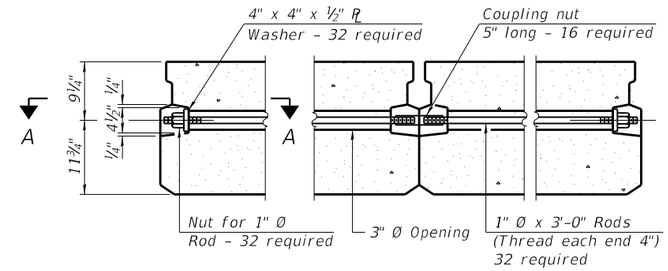

TYPICAL TRANSVERSE TIE ASSEMBLY

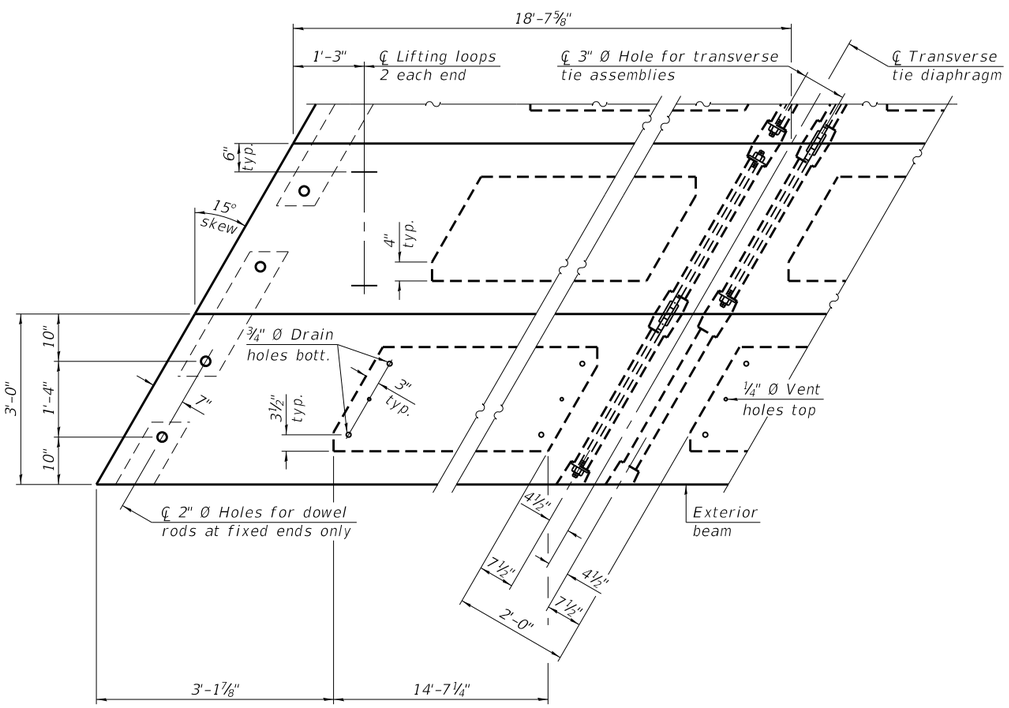

PLAN VIEW

Note:
Connect beams in pairs with the transverse tie configuration shown.

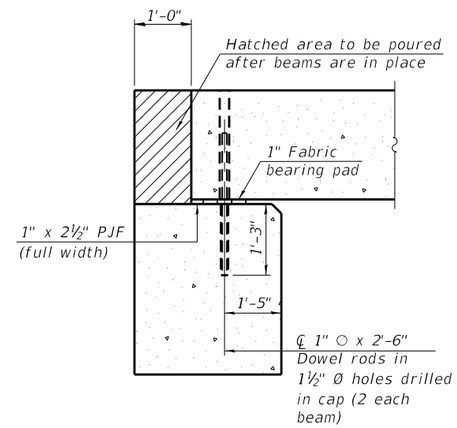

SECTION THRU ABUTMENTS
(Dimensions are at Rt. L's)

Note:
Cost of Premoulded Joint Filler included in the cost of Precast Prestressed Concrete Deck Beams (21" Depth).

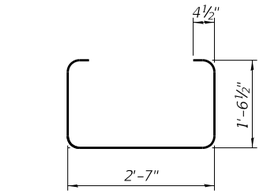

BAR S(E)

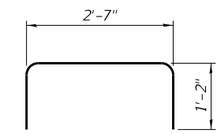

BAR S1(E)

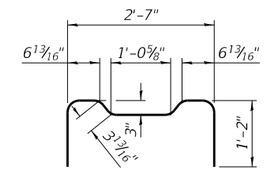

BAR S2(E)

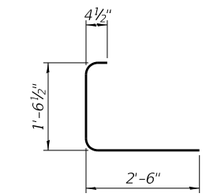

BAR S3(E)

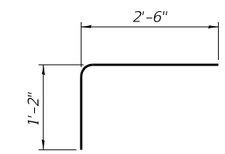

BAR S4(E)

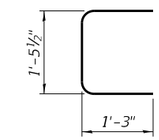

BAR U(E)

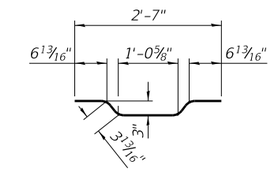

BAR A1(E)

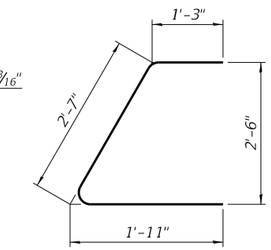

BAR U1(E)

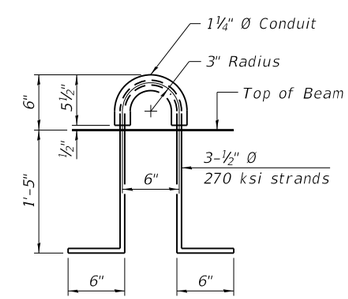

LIFTING LOOP DETAIL

NOTES

Prestressing steel shall be uncoated high strength, low relaxation 7-wire strand, Grade 270. The nominal diameter shall be ½" and the nominal cross-sectional area shall be 0.153 sq. in.

The 1" Ø rods in the transverse tie assembly shall be tightened to a snug fit and the threads set. Pockets on exterior faces of bridge shall be filled with grout after transverse tie assembly is in place.

Two ⅛" fabric adjusting shims of the dimensions of the exterior bearing pad shall be provided for each bearing pad location.

A minimum 2½" Ø lifting pin shall be used to engage the lifting loops during handling.

Corrosion Inhibitor, per Article 1020.05(b)(10) and 1021.07 of the Standard Specifications, shall be used in the concrete for precast prestressed concrete deck beams.

Compressive strength of prestressed concrete, f'c, shall be 6000 psi.

Compressive strength of prestressed concrete at release, f'ci, shall be 5000 psi.

BILL OF MATERIAL

Precast Prestressed Conc. Deck Bms. (21" depth)	Sq. Ft.	1,510

P:\Quincy\23files\230385\18.Transportation\Structure Plans\Final Bridge Plans.dgn

KLINGNER & ASSOCIATES, P.C.
Engineers • Architects • Surveyors
616 N.24TH ST. QUINCY, ILLINOIS 62301 217.223.3670
STATE OF ILLINOIS DESIGN FIRM NO. 184-2738

USER NAME = r.jp	DESIGNED - RJP	REVISED -	
	CHECKED - AMS	REVISED -	
PLOT SCALE = 1.333333 ' / in.	DRAWN - RJP	REVISED -	
PLOT DATE = 6/24/2025	CHECKED - AMS	REVISED -	

HANCOCK COUNTY
HIGHWAY DEPARTMENT

21" x 36" PPC DECK BEAM DETAILS
STRUCTURE NO. 034-4243

SHEET NO. 4 OF 10 SHEETS

T.R.	SECTION	COUNTY	TOTAL SHEETS	SHEET NO.
392	24-08117-00-BR	HANCOCK	26	11
		CONTRACT NO. 93845		
		ILLINOIS FED. AID PROJECT		

Notes:

A sufficient number of shims of various thicknesses, sized to fit behind the top spacer assembly, 5" x 11½", and bottom spacer assembly, 6" x 7", shall be provided to adjust posts for proper alignment. If the summation of shims is greater than ¼" (top) or ½" (bottom), longer bolts are required. Cost included with Steel Railing, Type S-1.

All steel rail elements including shims shall be galvanized according to Article 509.05 of the Standard Specifications.

All HSS tubing serving as railing shall be CVN tested according to Article 1006.34(b) of the Standard Specifications.

Rail splice inserts may be built out of 2 -⅜" bent plates in lieu of the 4 plate rail splice inserts shown, provided the outside dimensions are matched.

All round head bolts shall be ASTM A307 with locknuts according to ASTM A563 grade A.

Cost of curled end sections shall be included with Steel Railing, Type S-1 (2 Req'd)

The curled end sections shall be galvanized steel meeting the requirements of Article 1006.34 (c) of the Standard Specifications.

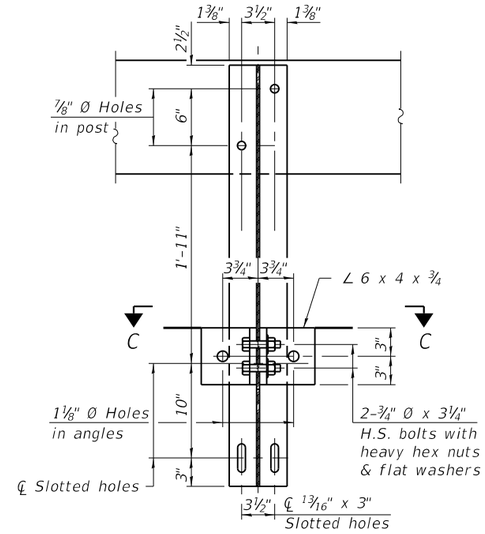

SECTION B-B

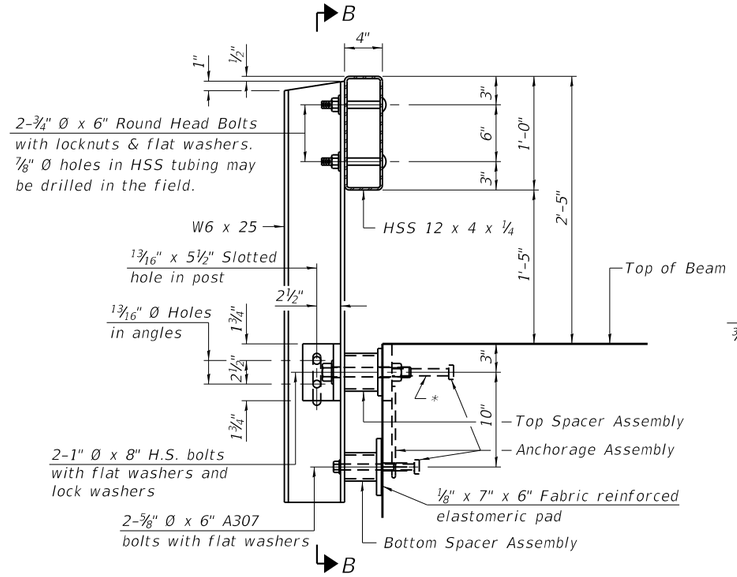

SECTION AT RAILING POST

* The outermost longitudinal reinforcement bar shall be placed directly above the studs of the rail post anchorage assembly. The anchorage studs may be bent down ½" to accommodate the top reinforcement bar placement.

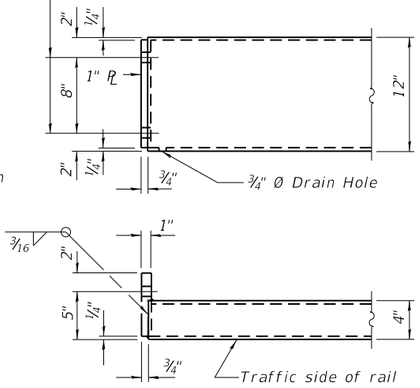

END OF RAIL DETAILS

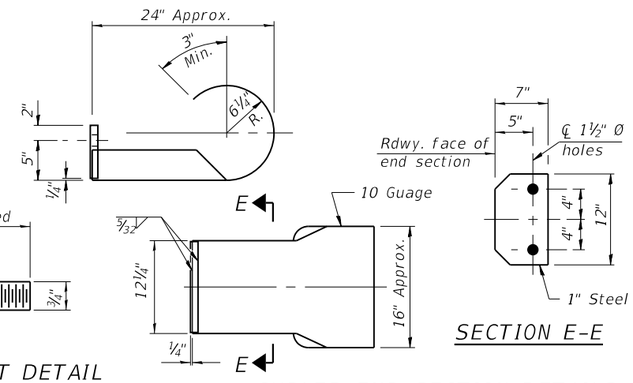

SECTION E-E

CURLED END SECTION DETAILS

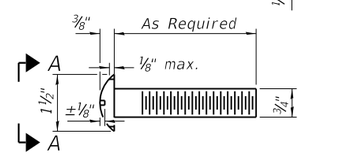

ROUND HEAD BOLT DETAIL

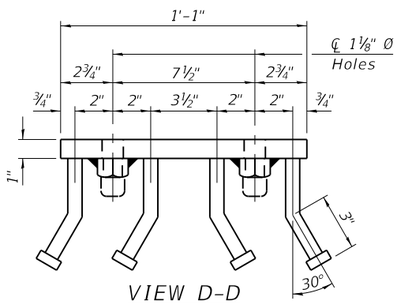

VIEW D-D

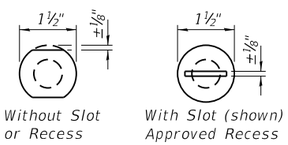

VIEW A-A

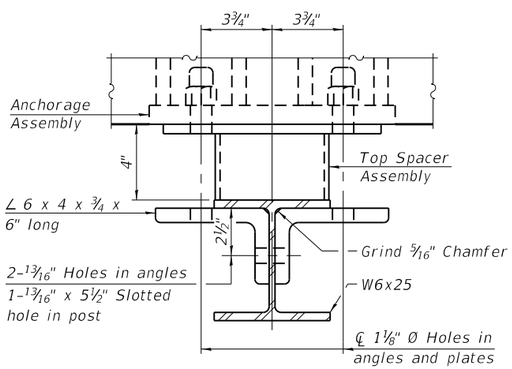

SECTION C-C

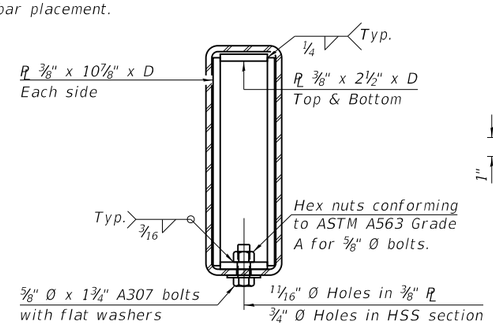

SECTION AT RAIL SPLICE

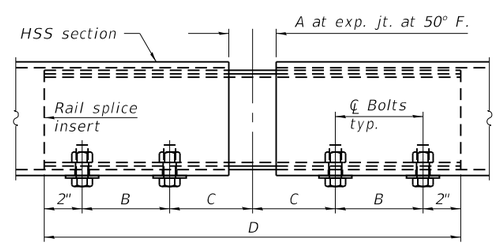

RAIL SPLICE ELEVATION

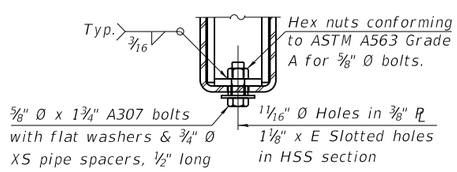

RAIL SPLICE CONNECTION AT EXPANSION JT.

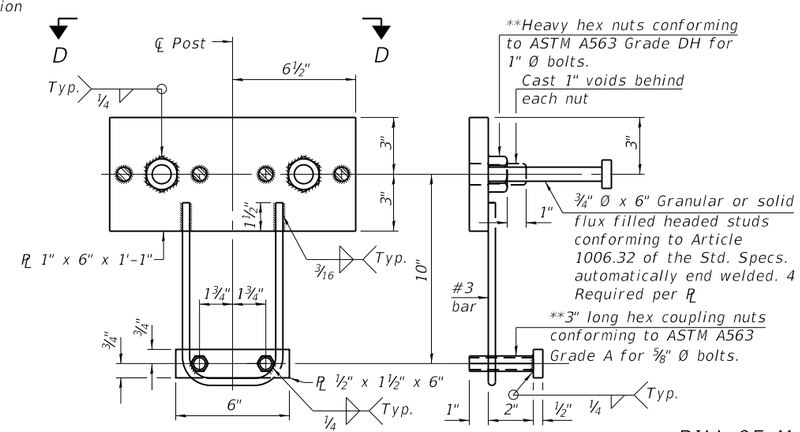

ANCHORAGE ASSEMBLY

** Threaded areas shall be plugged or blocked off during casting of concrete.

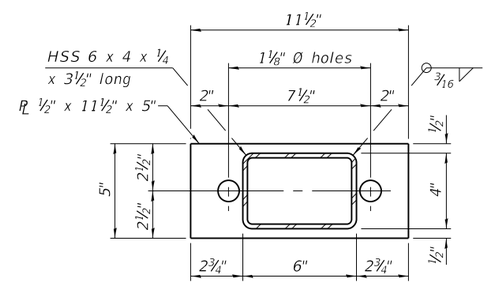

TOP SPACER ASSEMBLY

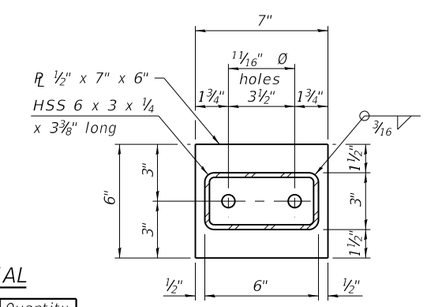

BOTTOM SPACER ASSEMBLY

RAILING CRITERIA

NCHRP 350 Test Level	2
Railing Weight (plf)	50
Max Post Spacing	10'-9"
HMA thickness range (in)	1¼ - 3⅛

SPLICE DIMENSIONS

Location	T	A	B	C	D	E
All locs. not over exp. jts.	0	¼"	4"	4"	1'-8"	-
Over Strip Seal Jt.	≤4"	2½"	4⅝"	4⅜"	1'-10"	3 1/16"
Over Finger or Modular Jt.	≤9½"	5½"	7⅞"	7¼"	2'-9¼"	5 13/16"
Over Finger or Modular Jt.	≤15"	8¼"	10⅛"	10"	3'-8¼"	8 9/16"

T = ; total movement along centerline of roadway at expansion joint.

BILL OF MATERIAL

Item	Unit	Quantity
Steel Railing, Type S-1	Foot	116

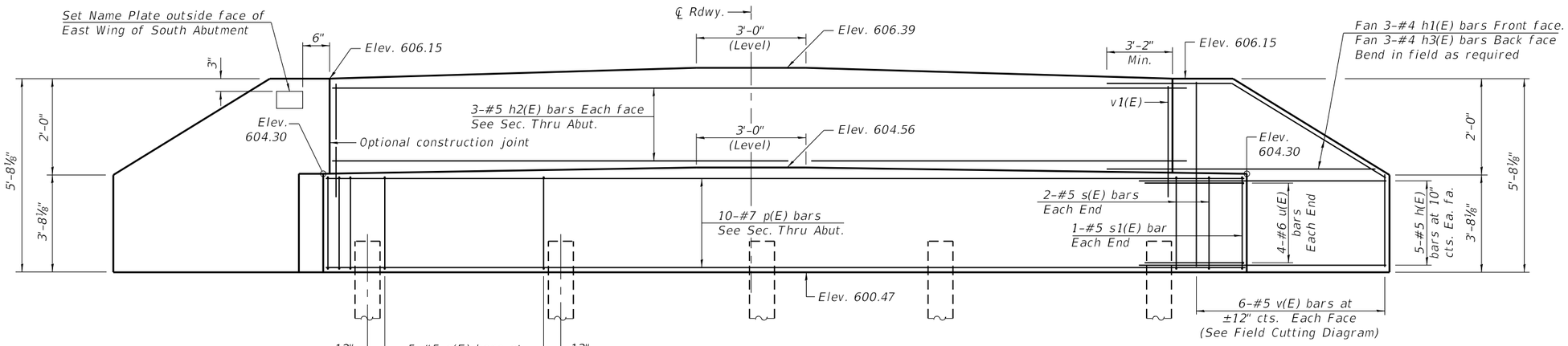

ELEVATION

(Looking South)

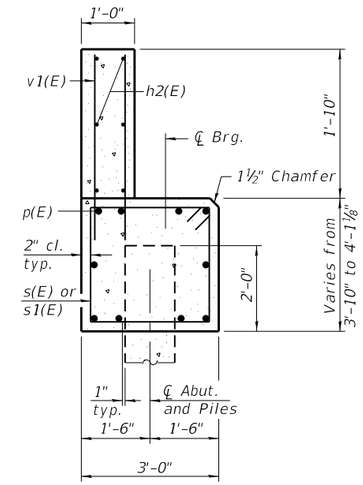

SECTION A-A

(Dimensions are at Rt. ∠'s)

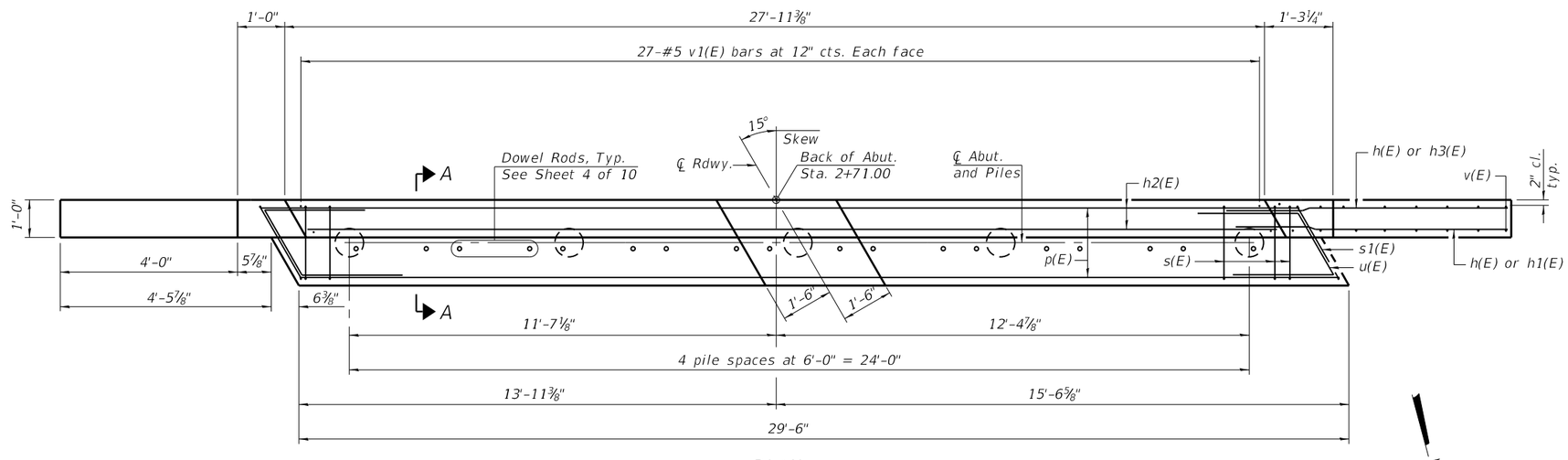

PLAN

BILL OF MATERIAL

Bar	No.	Size	Length	Shape
h(E)	20	#5	7'-6"	
h1(E)	6	#4	4'-8"	
h2(E)	6	#5	27'-7"	
h3(E)	6	#4	9'-0"	
p(E)	10	#7	29'-2"	
s(E)	24	#5	13'-3"	
s1(E)	2	#5	13'-5"	
u(E)	8	#6	11'-3"	
v(E)	12	#5	8'-10"	
v1(E)	54	#5	3'-8"	
Structure Excavation			Cu. Yd.	65
Concrete Structures			Cu. Yd.	16.6
Reinforcement Bars, Epoxy Coated			Pound	1,790
Furnishing Metal Shell Piles 12" X 0.25"			Foot	200
Driving Piles			Foot	200
Test Pile Metal Shells			Each	1
Name Plates			Each	1

Notes:
Cast backwall after beams have been erected.
Space reinforcement in cap to miss dowel rods.
For details of piles see Sheet 8 of 10.

PILE DATA

Type: Metal Shell Piles, 12" x 0.25"
Nominal Required Bearing: 258 Kips
Factored Resistance Available: 142 Kips
Est. Length: 50 Ft./Pile
No. Production Piles: 4
No. Test Piles: 1

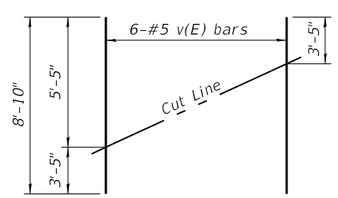

FIELD CUTTING DIAGRAM

Order v(E) full length. Cut as shown and use remainder of bars in opposite face.

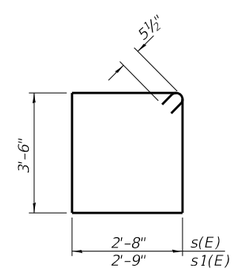

BARS s(E) & s1(E)

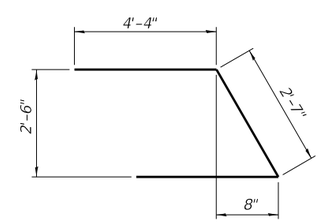

BAR u(E)

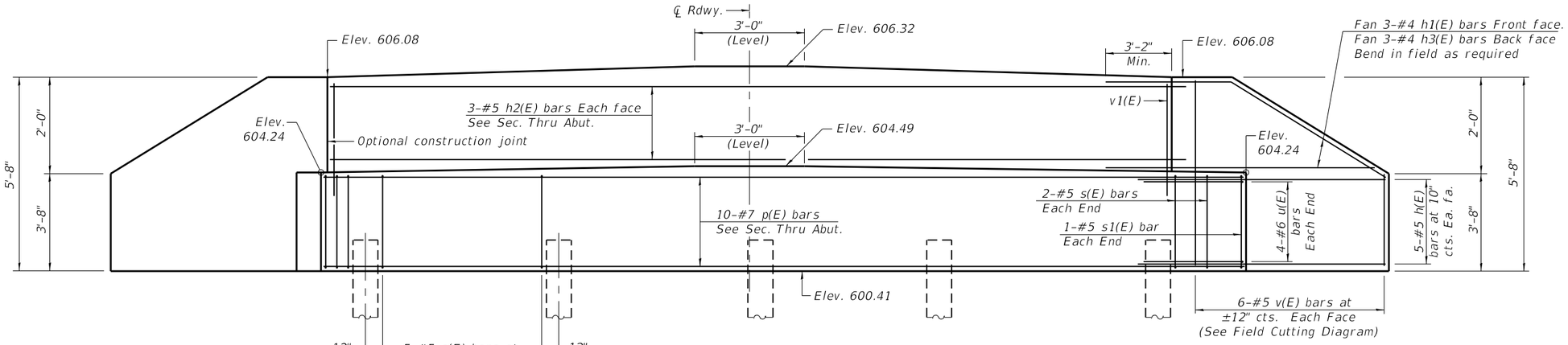

ELEVATION

(Looking North)

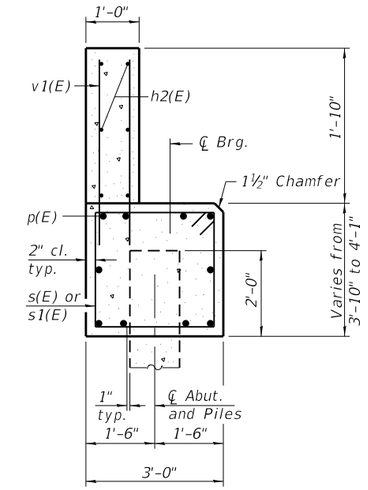

SECTION A-A

(Dimensions are at Rt. ∠'s)

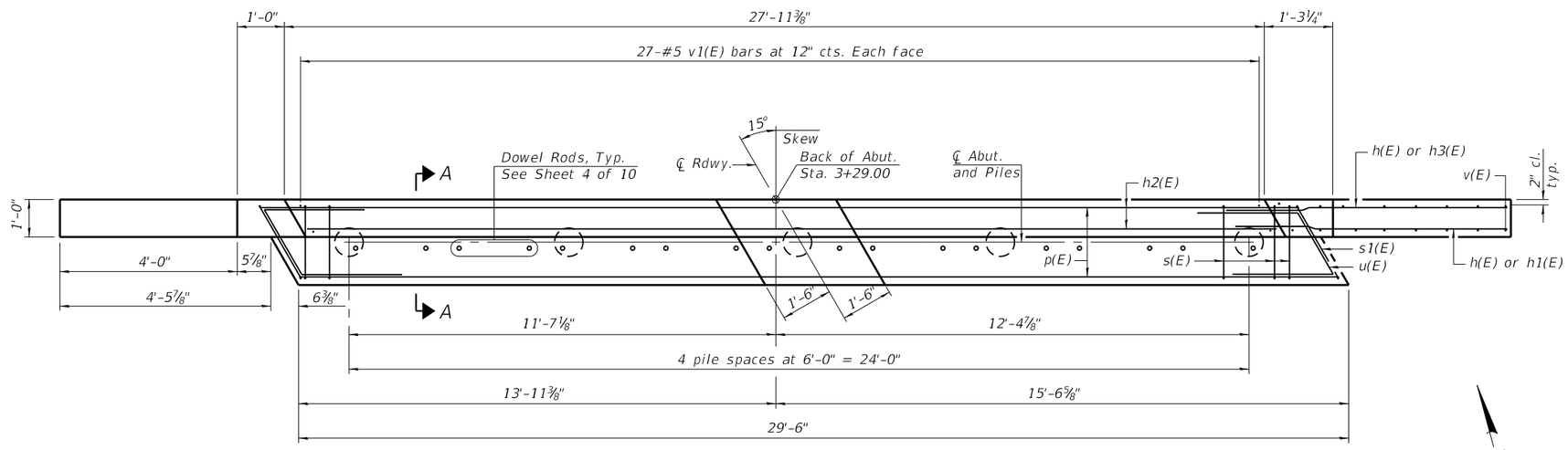

PLAN

BILL OF MATERIAL

Bar	No.	Size	Length	Shape
h(E)	20	#5	7'-6"	
h1(E)	6	#4	4'-8"	
h2(E)	6	#5	27'-7"	
h3(E)	6	#4	9'-0"	
p(E)	10	#7	29'-2"	
s(E)	24	#5	13'-3"	
s1(E)	2	#5	13'-5"	
u(E)	8	#6	11'-3"	
v(E)	12	#5	8'-10"	
v1(E)	54	#5	3'-8"	
Structure Excavation			Cu. Yd.	65
Concrete Structures			Cu. Yd.	16.5
Reinforcement Bars, Epoxy Coated			Pound	1,790
Furnishing Metal Shell Piles 12" X 0.25"			Foot	240
Driving Piles			Foot	240
Test Pile Metal Shells			Each	1

Notes:
Cast backwall after beams have been erected.
Space reinforcement in cap to miss dowel rods.
For details of piles see Sheet 8 of 10.

PILE DATA

Type: Metal Shell Piles, 12" x 0.25"
Nominal Required Bearing: 258 Kips
Factored Resistance Available: 142 Kips
Est. Length: 60 Ft./Pile
No. Production Piles: 4
No. Test Piles: 1

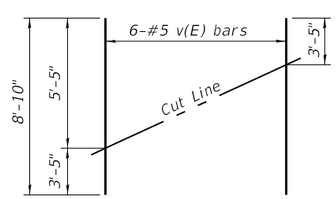

FIELD CUTTING DIAGRAM

Order v(E) full length. Cut as shown and use remainder of bars in opposite face.

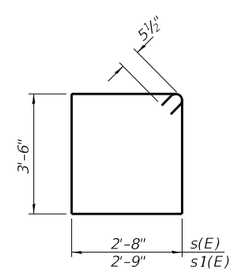

BARS s(E) & s1(E)

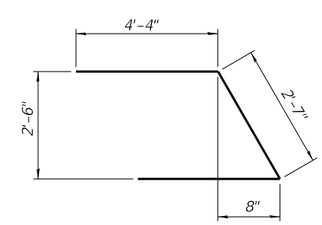

BAR u(E)

P:\Quincy\23files\23B385\18.Transportation\Structure Plans\Final Bridge Plans.dgn

KLINGNER & ASSOCIATES, P.C.
Engineers • Architects • Surveyors
616 N.24TH ST., QUINCY, ILLINOIS 62301 217.223.3670
STATE OF ILLINOIS DESIGN FIRM NO. 184-2738

USER NAME = rjp	DESIGNED – RJP	REVISED –
	CHECKED – AMS	REVISED –
PLOT SCALE = 1.333333 ' / in.	DRAWN – RJP	REVISED –
PLOT DATE = 6/24/2025	CHECKED – AMS	REVISED –

HANCOCK COUNTY
HIGHWAY DEPARTMENT

NORTH ABUTMENT
STRUCTURE NO. 034-4243

SHEET NO. 7 OF 10 SHEETS

T.R.	SECTION	COUNTY	TOTAL SHEETS	SHEET NO.
392	24-08117-00-BR	HANCOCK	26	14

CONTRACT NO. 93845

ILLINOIS FED. AID PROJECT

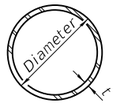

METAL SHELL PILE TABLE

Designation and outside diameter	Wall thickness t	Weight per foot (Lbs./ft.)	Inside volume (yd.³/ft.)
PP12	0.250"	31.40	0.0267
PP14	0.250"	36.75	0.0368
PP14	0.312"	45.65	0.0361
PP16	0.312"	52.32	0.0478
PP16	0.375"	62.64	0.0470

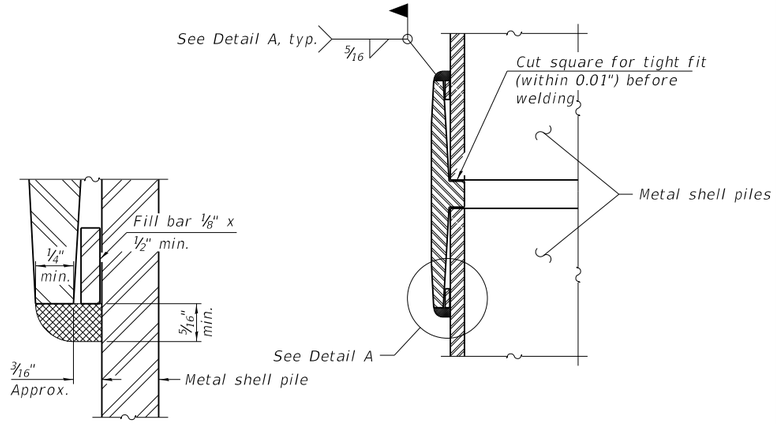

DETAIL A

WELDED COMMERCIAL SPLICE

Notes:
The 1/8" x 1/2" min. fill bar may be constructed of 2 bars with a 1/8" max. gap between them.
Pile segments shall be driven to solid contact with splicer before welding.

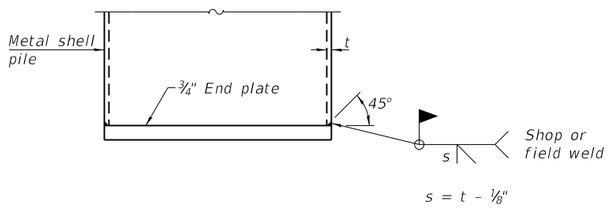

END PLATE ATTACHMENT

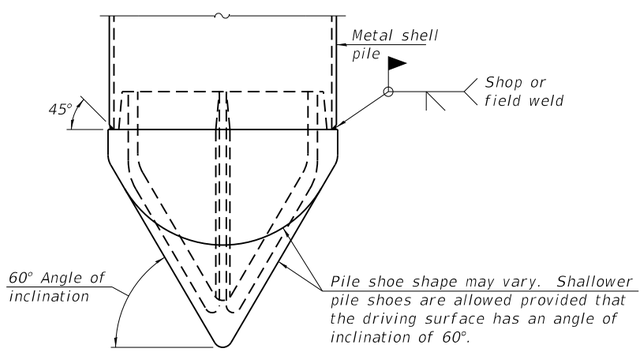

PILE SHOE ATTACHMENT

(When called for on the plans, the Contractor shall furnish metal shell pile shoes consisting of a single piece conical pile point as shown. The pile shoes shall be cast in one piece steel according to either ASTM A 148 Grade 80-50 or AASHTO M 103 Grade 65-35 and shall provide full bearing over the full circumference of the metal shell pile. The pile shoe shall have tapered leads to assure proper alignment and fitting and shall be secured to the pile with a circumferential weld).

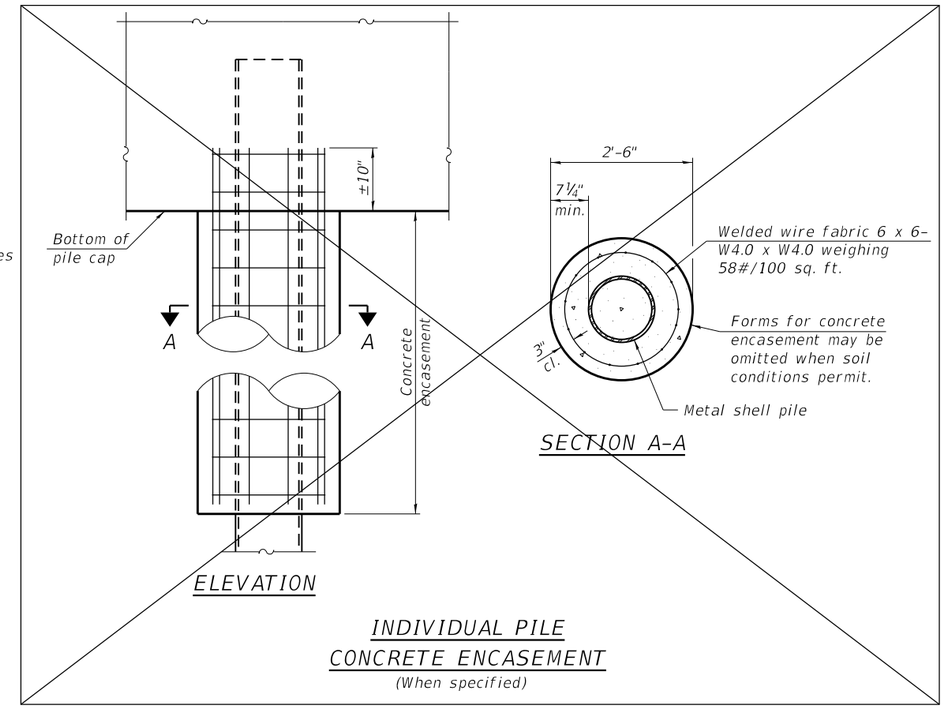

INDIVIDUAL PILE CONCRETE ENCASEMENT

(When specified)

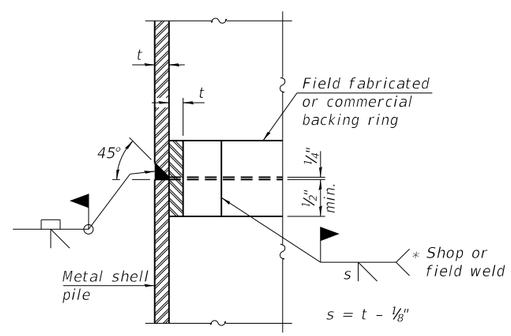

COMPLETE PENETRATION WELD SPLICE

* Field fabricated backing ring may be made from pile shell by removing segment to allow reducing circumference and vertically rejoin with partial joint penetration weld.

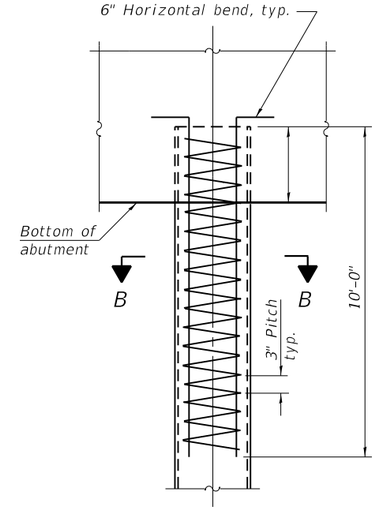

ELEVATION

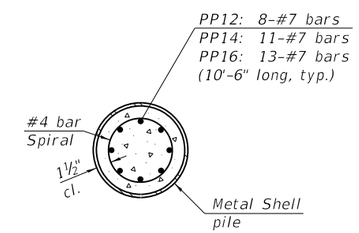

SECTION B-B

REINFORCEMENT AT ABUTMENTS

(Omit when concrete encasement is specified)

Note:
The metal shell piles shall be according to Article 1006.05 of the Standard Specifications.

P:\Quincy\231\les\238365\18.Transportation\Structure Plans\Final Bridge Plans.dgn

KLINGNER & ASSOCIATES, P.C.
Engineers • Architects • Surveyors
616 N.24TH ST. QUINCY, ILLINOIS 62301 217.223.3670
STATE OF ILLINOIS DESIGN FIRM NO. 184-2738

USER NAME = rjp	DESIGNED - RJP	REVISED -	
	CHECKED - AMS	REVISED -	
PLOT SCALE = 1.333333 ' / in.	DRAWN - RJP	REVISED -	
PLOT DATE = 6/24/2025	CHECKED - AMS	REVISED -	

HANCOCK COUNTY
HIGHWAY DEPARTMENT

METAL SHELL PILE DETAILS
STRUCTURE NO. 034-4243

SHEET NO. 8 OF 10 SHEETS

T.R.	SECTION	COUNTY	TOTAL SHEETS	SHEET NO.
392	24-08117-00-BR	HANCOCK	26	15
		CONTRACT NO. 93845		
		ILLINOIS FED. AID PROJECT		

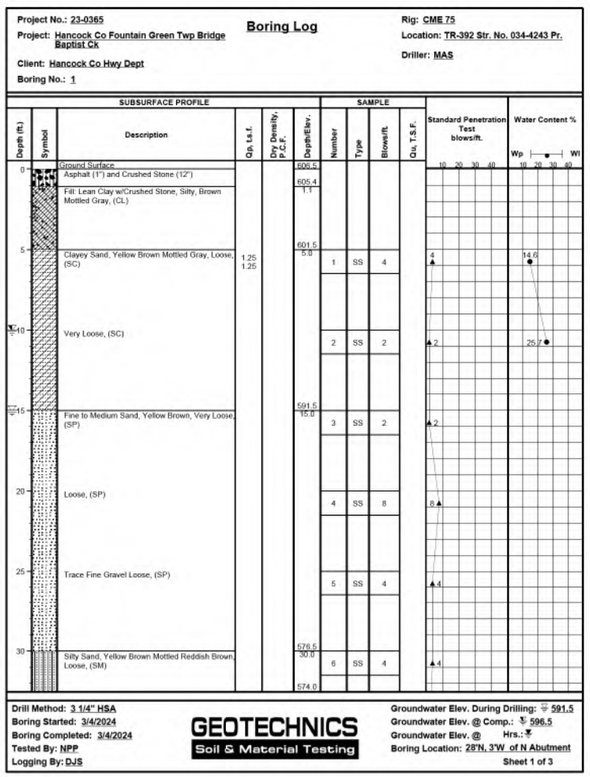

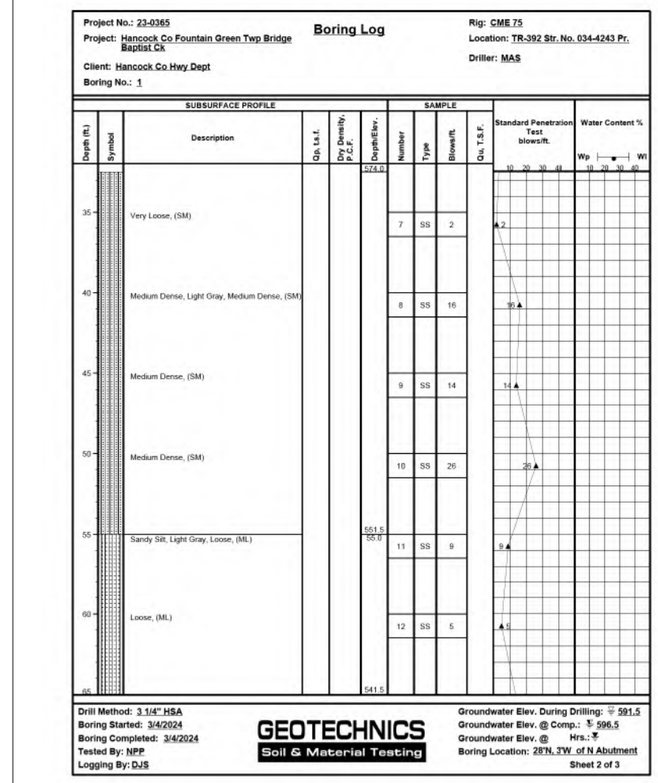

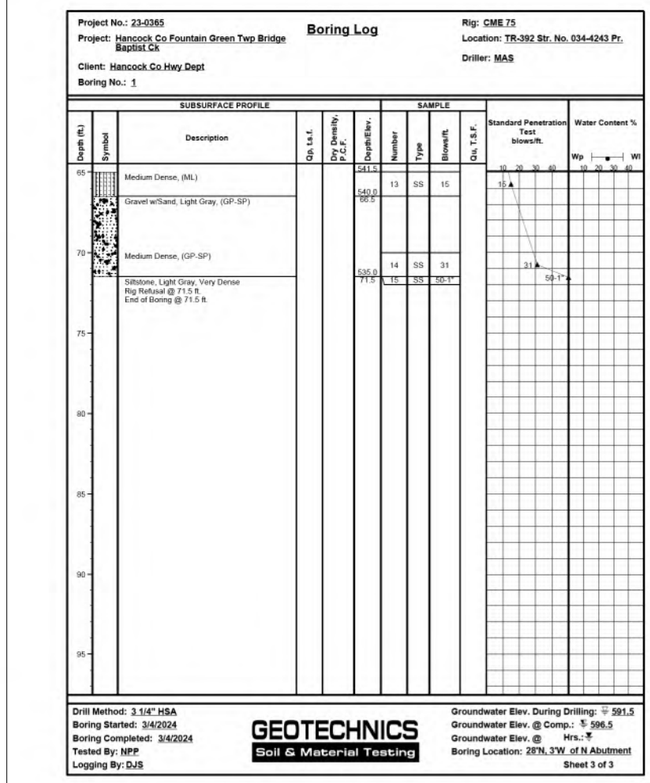

BORING #1

Sheet 1 of 2

KLINGNER & ASSOCIATES, P.C. Engineers · Architects · Surveyors 616 N.24TH ST. QUINCY, ILLINOIS 62301 217.223.3670 STATE OF ILLINOIS DESIGN FIRM NO. 184-2738	USER NAME = r.jp	DESIGNED – RJP	REVISED –	HANCOCK COUNTY HIGHWAY DEPARTMENT	BORING LOGS STRUCTURE NO. 034-4243	T.R.	SECTION	COUNTY	TOTAL SHEETS	SHEET NO.
		CHECKED – AMS	REVISED –			392	24-08117-00-BR	HANCOCK	26	16
	PLOT SCALE = 1.333333 ' / in.	DRAWN – RJP	REVISED –			CONTRACT NO. 93845				
	PLOT DATE = 6/24/2025	CHECKED – AMS	REVISED –		SHEET NO. 9 OF 10 SHEETS	ILLINOIS FED. AID PROJECT				

P:\Quincy\23files\230365\18.Transportation\Structure Plans\Final Bridge Plans.dgn

Boring Log

Project No.: 23-0365
Project: Hancock Co Fountain Green Twp Bridge Baptist Ck
Client: Hancock Co Hwy Dept
Boring No.: 2

Rig: CME 75
Location: TR-392 Str. No. 034-4243 Pr.
Driller: MAS

Depth (ft.)	Description	Qp, t.s.f.	Dry Density, p.c.f.	Depth/Elev.	Sample Number	Type	Blows/ft.	Qu, T.S.F.	Standard Penetration Test blows/ft.	Water Content % (Wp – Wi)
0	Ground Surface			606.2						
	Crushed Stone (10")			605.4						
	Fill: Lean Clay w/Crushed Stone, Silty, Brown Mottled Gray, (CL)			0.8						
5	Soft, (CL)	1.25 0.75			1	SS	3		3	22.8
				596.2						
10	Lean Clay, Silty, Gray Mottled Brown, Very Soft, (CL)			10.0	2	SS	1		1	30.7
15	Medium, (CL)	1.0			3	SS	4		4	19.2
	Silty Fine Sand, Reddish Brown Mottled Light Gray, (SM)			589.2 17.0						
20	Loose, (SM)				4	SS	5		5	
				581.2 25.0						
25	Sandy Lean Clay, Little Fine Gravel, Light Gray, Very Stiff, (CL)	4.5+ 4.5+	124.5		5	SS	18	3.57	18	12.7
30	Very Stiff, (CL)	3.0 3.5			6	SS	4		4	20.9
				573.7						

Drill Method: 3 1/4" HSA
Boring Started: 3/4/2024
Boring Completed: 3/4/2024
Tested By: NPP
Logging By: DJS

GEOTECHNICS
Soil & Material Testing

Groundwater Elev. During Drilling: ▽ 586.2
Groundwater Elev. @ Comp.: ▽ 597.2
Groundwater Elev. @ Hrs.: ▽
Boring Location: 18'S of S Abutment

Sheet 1 of 3

Boring Log

Project No.: 23-0365
Project: Hancock Co Fountain Green Twp Bridge Baptist Ck
Client: Hancock Co Hwy Dept
Boring No.: 2

Rig: CME 75
Location: TR-392 Str. No. 034-4243 Pr.
Driller: MAS

Depth (ft.)	Description	Qp, t.s.f.	Dry Density, p.c.f.	Depth/Elev.	Sample Number	Type	Blows/ft.	Qu, T.S.F.	Standard Penetration Test blows/ft.	Water Content % (Wp – Wi)
				573.7						
35	w/Gray Silt Seams, Stiff, (CL)	3.0 3.0			7	SS	7		7	22.0
				566.2 40.0						
40	Lean Clay, Silty, Light Gray, Medium, (CL)	1.5 3.0			8	SS	6		6	25.3
				561.2 45.0						
45	Silty Fine Sand, Light Gray, Medium Dense, (SM)				9	SS	14		14	
50	Medium Dense, (SM)				10	SS	10		10	26.2
55	Medium Dense, (SM)				11	SS	14		14	
60	Medium Dense, (SM)				12	SS	12		12	
65				541.2						

Drill Method: 3 1/4" HSA
Boring Started: 3/4/2024
Boring Completed: 3/4/2024
Tested By: NPP
Logging By: DJS

GEOTECHNICS
Soil & Material Testing

Groundwater Elev. During Drilling: ▽ 586.2
Groundwater Elev. @ Comp.: ▽ 597.2
Groundwater Elev. @ Hrs.: ▽
Boring Location: 18'S of S Abutment

Sheet 2 of 3

Boring Log

Project No.: 23-0365
Project: Hancock Co Fountain Green Twp Bridge Baptist Ck
Client: Hancock Co Hwy Dept
Boring No.: 2

Rig: CME 75
Location: TR-392 Str. No. 034-4243 Pr.
Driller: MAS

Depth (ft.)	Description	Qp, t.s.f.	Dry Density, p.c.f.	Depth/Elev.	Sample Number	Type	Blows/ft.	Qu, T.S.F.	Standard Penetration Test blows/ft.	Water Content % (Wp – Wi)
65	Loose, (SM)			541.2	13	SS	7		7	
70	Loose, (SM)				14	SS	8		8	
75	Loose, (SM)			529.7 76.5	15	SS	8		8	23.6
	End of Boring @ 76½ ft.									
80										
85										
90										
95										

Drill Method: 3 1/4" HSA
Boring Started: 3/4/2024
Boring Completed: 3/4/2024
Tested By: NPP
Logging By: DJS

GEOTECHNICS
Soil & Material Testing

Groundwater Elev. During Drilling: ▽ 586.2
Groundwater Elev. @ Comp.: ▽ 597.2
Groundwater Elev. @ Hrs.: ▽
Boring Location: 18'S of S Abutment

Sheet 3 of 3

BORING #2

Sheet 2 of 2

P:\Quincy\23files\230365\B.Transportation\Structure Plans\Final Bridge Plans.dgn

KLINGNER & ASSOCIATES, P.C.
Engineers • Architects • Surveyors
616 N.24TH ST., QUINCY, ILLINOIS 62301 217.223.3970
STATE OF ILLINOIS DESIGN FIRM NO. 184-2738

USER NAME = rjp	DESIGNED – RJP	REVISED –	
	CHECKED – AMS	REVISED –	
PLOT SCALE = 1.333333 ' / in.	DRAWN – RJP	REVISED –	
PLOT DATE = 6/24/2025	CHECKED – AMS	REVISED –	

HANCOCK COUNTY
HIGHWAY DEPARTMENT

BORING LOGS
STRUCTURE NO. 034-4243

SHEET NO. 10 OF 10 SHEETS

T.R.	SECTION	COUNTY	TOTAL SHEETS	SHEET NO.
392	24-08117-00-BR	HANCOCK	26	17
		CONTRACT NO. 93845		
		ILLINOIS	FED. AID PROJECT	

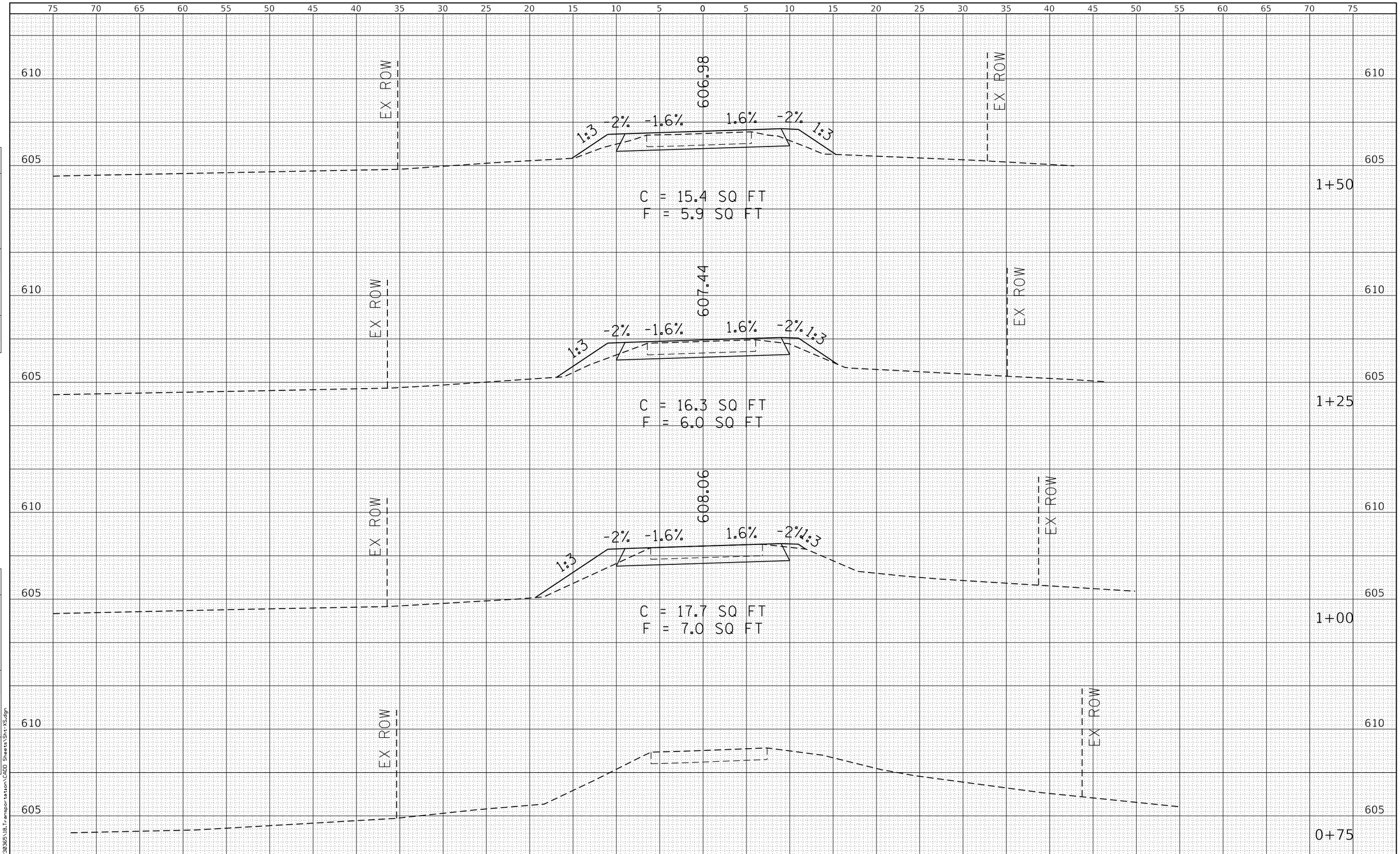

FINAL SURVEY		BY	DATE
NOTE BOOK	SURVEYED		
	PLOTTED		
	TEMPLATE		
	AREAS		
NO.	AREAS CHECKED		

ORIGINAL SURVEY		BY	DATE
NOTE BOOK	SURVEYED		
	PLOTTED		
	TEMPLATE		
	AREAS		
NO.	AREAS CHECKED		

P:\Quincy\23files\230365\18.Transportation\CADD Sheets\Sht-XS.dgn

KLINGNER & ASSOCIATES, P.C.
Engineers • Architects • Surveyors
616 N.24TH ST. QUINCY, ILLINOIS 62301 217.223.3670
STATE OF ILLINOIS DESIGN FIRM NO. 184-2738

USER NAME = rjp	DESIGNED - RJP	REVISED -
	DRAWN - RJP	REVISED -
PLOT SCALE = 10.0000 ' / in.	CHECKED - EBB	REVISED -
PLOT DATE = 7/28/2025	DATE -	REVISED -

HANCOCK COUNTY HIGHWAY DEPARTMENT

TR 392 (2980E) OVER BAPTIST CREEK
CROSS SECTIONS

SCALE: 1"=5'H 1"=2.5'V | SHEET 1 OF 9 SHEETS | STA. 0+75 TO STA. 1+50

T.R. RTE.	SECTION	COUNTY	TOTAL SHEETS	SHEET NO.
392	24-08117-00-BR	HANCOCK	26	18

CONTRACT NO. 93845

ILLINOIS FED. AID PROJECT

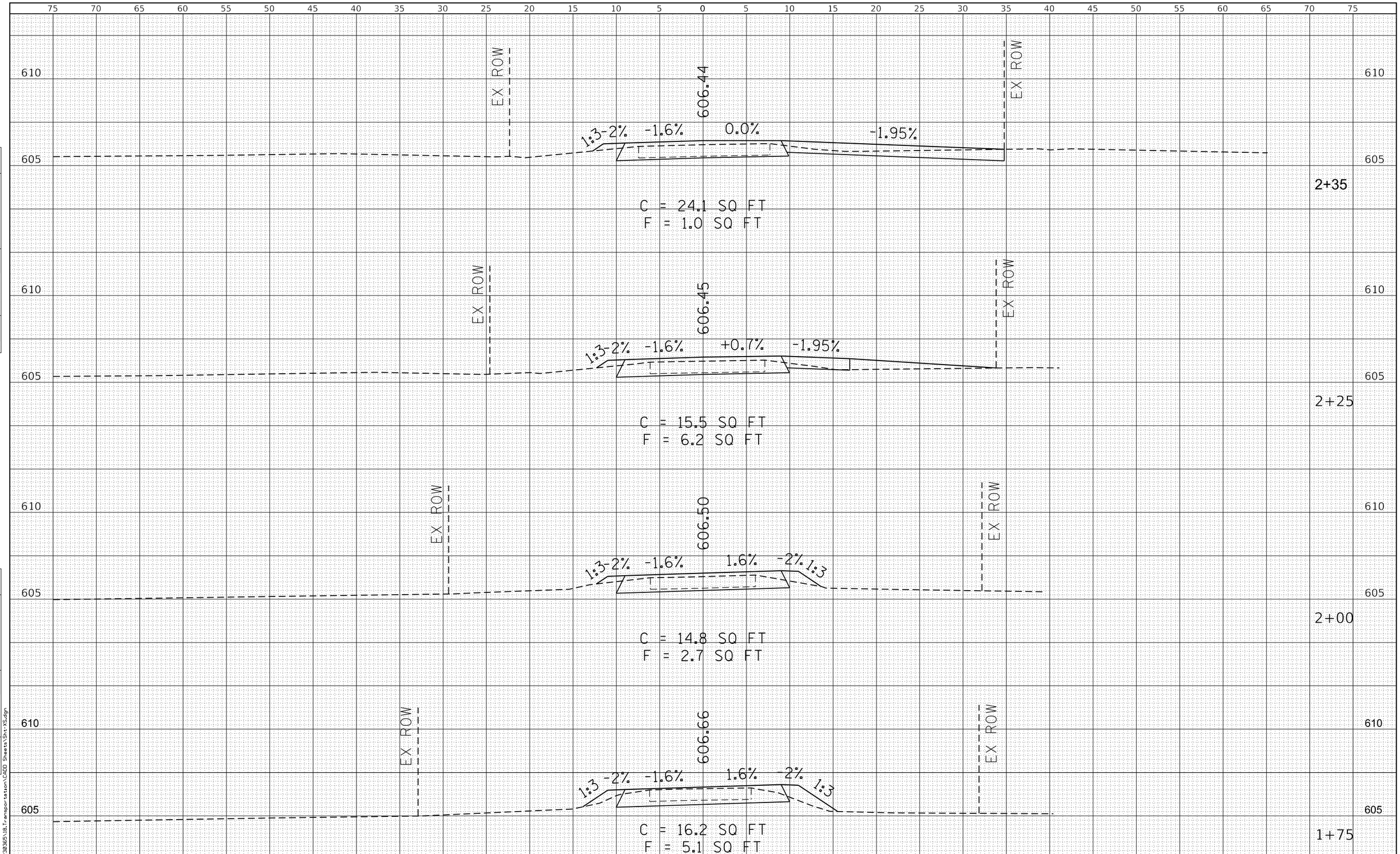

FINAL SURVEY	BY	DATE
SURVEYED		
PLOTTED		
TEMPLATE		
AREAS		
AREAS CHECKED		
NOTE BOOK NO.		

ORIGINAL SURVEY	BY	DATE
SURVEYED		
PLOTTED		
TEMPLATE		
AREAS		
AREAS CHECKED		
NOTE BOOK NO.		

P:\Quincy\23files\230365\18.Transportation\CADD Sheets\Sht-XS.dgn

KLINGNER & ASSOCIATES, P.C.
Engineers • Architects • Surveyors
616 N.24TH ST. QUINCY, ILLINOIS 62301 217.223.3670
STATE OF ILLINOIS DESIGN FIRM NO. 184-2738

USER NAME = rjp	DESIGNED - RJP	REVISED -
	DRAWN - RJP	REVISED -
PLOT SCALE = 10.0000 ' / in.	CHECKED - EBB	REVISED -
PLOT DATE = 7/28/2025	DATE -	REVISED -

HANCOCK COUNTY HIGHWAY DEPARTMENT

TR 392 (2980E) OVER BAPTIST CREEK
CROSS SECTIONS

SCALE: 1"=5'H 1"=2.5'V | SHEET 2 OF 9 SHEETS | STA. 1+75 TO STA. 2+35

T.R. RTE.	SECTION	COUNTY	TOTAL SHEETS	SHEET NO.
392	24-08117-00-BR	HANCOCK	26	19

CONTRACT NO. 93845

ILLINOIS FED. AID PROJECT

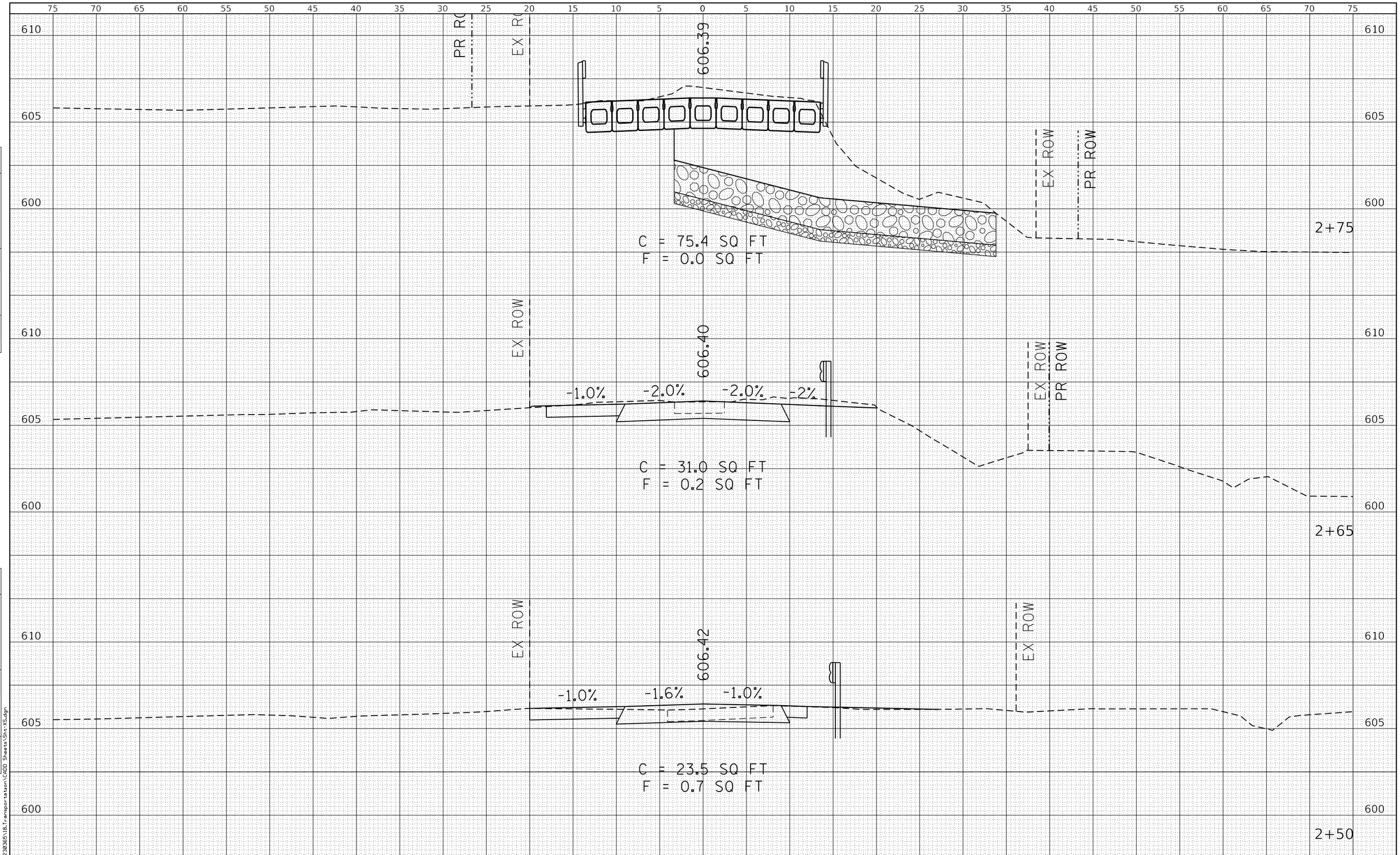

FINAL SURVEY		BY	DATE
NOTE BOOK	SURVEYED		
	PLOTTED		
	TEMPLATE		
	AREAS		
NO.	AREAS CHECKED		

ORIGINAL SURVEY		BY	DATE
NOTE BOOK	SURVEYED		
	PLOTTED		
	TEMPLATE		
	AREAS		
NO.	AREAS CHECKED		

P:\Quincy\23files\230365\18.Transportation\CADD Sheets\Sht-XS.dgn

KLINGNER & ASSOCIATES, P.C.
Engineers • Architects • Surveyors
616 N.24TH ST., QUINCY, ILLINOIS 62301 217.223.3670
STATE OF ILLINOIS DESIGN FIRM NO. 184-2738

USER NAME = rjp	DESIGNED - RJP	REVISED -
	DRAWN - RJP	REVISED -
PLOT SCALE = 10.0000 ' / in.	CHECKED - EBB	REVISED -
PLOT DATE = 7/28/2025	DATE -	REVISED -

HANCOCK COUNTY
HIGHWAY DEPARTMENT

TR 392 (2980E) OVER BAPTIST CREEK
CROSS SECTIONS

SCALE: 1"=5'H 1"=2.5'V | SHEET 3 OF 9 SHEETS | STA. 2+50 TO STA. 2+75

T.R. RTE.	SECTION	COUNTY	TOTAL SHEETS	SHEET NO.
392	24-08117-00-BR	HANCOCK	26	20

CONTRACT NO. 93845

ILLINOIS FED. AID PROJECT

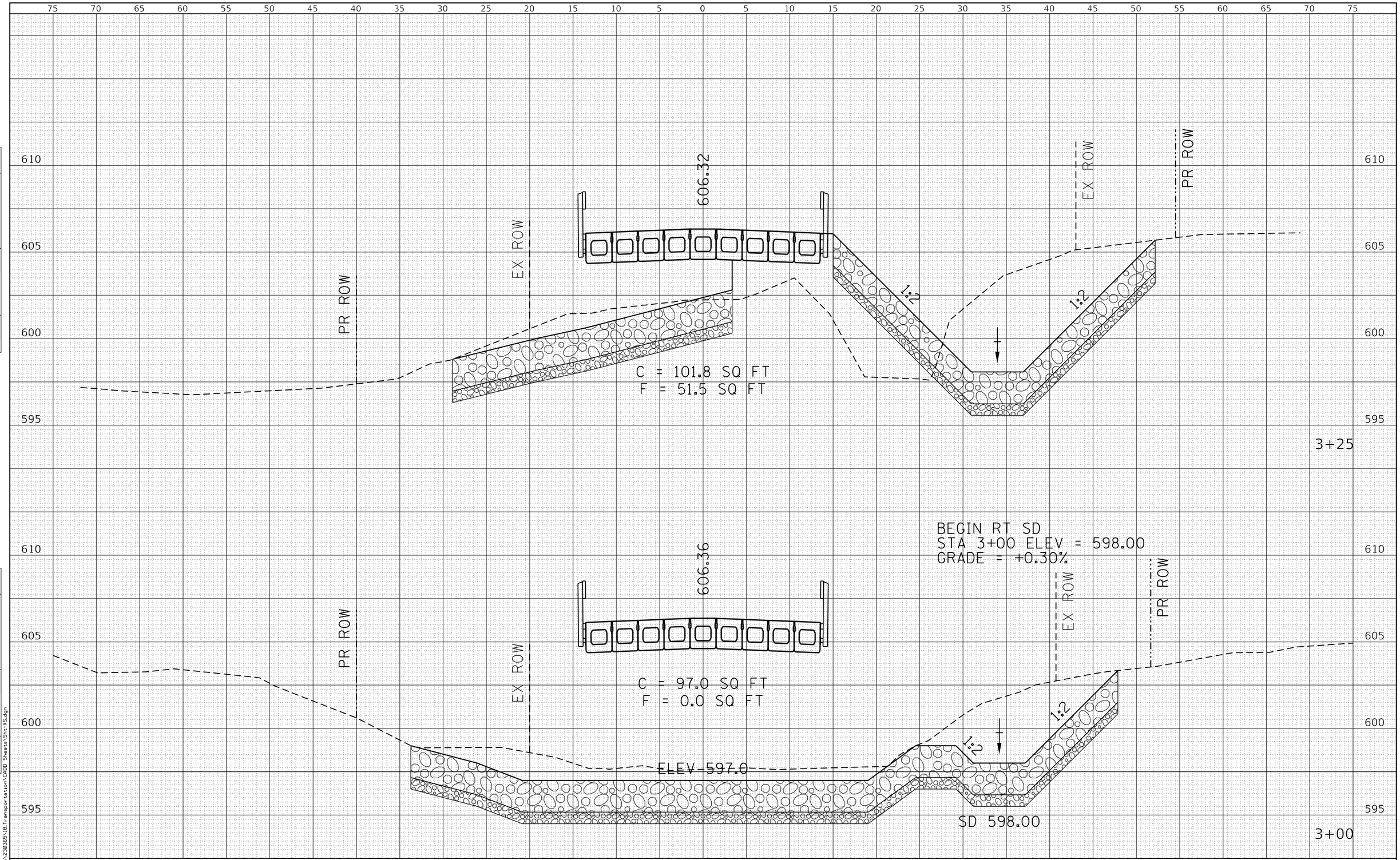

FINAL SURVEY	BY	DATE
SURVEYED		
PLOTTED		
TEMPLATE		
AREAS		
AREAS CHECKED		
NOTE BOOK NO.		

ORIGINAL SURVEY	BY	DATE
SURVEYED		
PLOTTED		
TEMPLATE		
AREAS		
AREAS CHECKED		
NOTE BOOK NO.		

P:\Quincy\23files\230365\18.Transportation\CADD Sheets\Sht-XS.dgn

KLINGNER & ASSOCIATES, P.C.
Engineers • Architects • Surveyors
616 N.24TH ST. QUINCY, ILLINOIS 62301 217.223.3670
STATE OF ILLINOIS DESIGN FIRM NO. 184-2738

USER NAME = rjp	DESIGNED - RJP	REVISED -
	DRAWN - RJP	REVISED -
PLOT SCALE = 10.0000 ' / in.	CHECKED - EBB	REVISED -
PLOT DATE = 7/28/2025	DATE -	REVISED -

HANCOCK COUNTY HIGHWAY DEPARTMENT

TR 392 (2980E) OVER BAPTIST CREEK
CROSS SECTIONS

SCALE: 1"=5'H 1"=2.5'V | SHEET 4 OF 9 SHEETS | STA. 3+00 TO STA. 3+25

T.R. RTE.	SECTION	COUNTY	TOTAL SHEETS	SHEET NO.
392	24-08117-00-BR	HANCOCK	26	21

CONTRACT NO. 93845

ILLINOIS FED. AID PROJECT

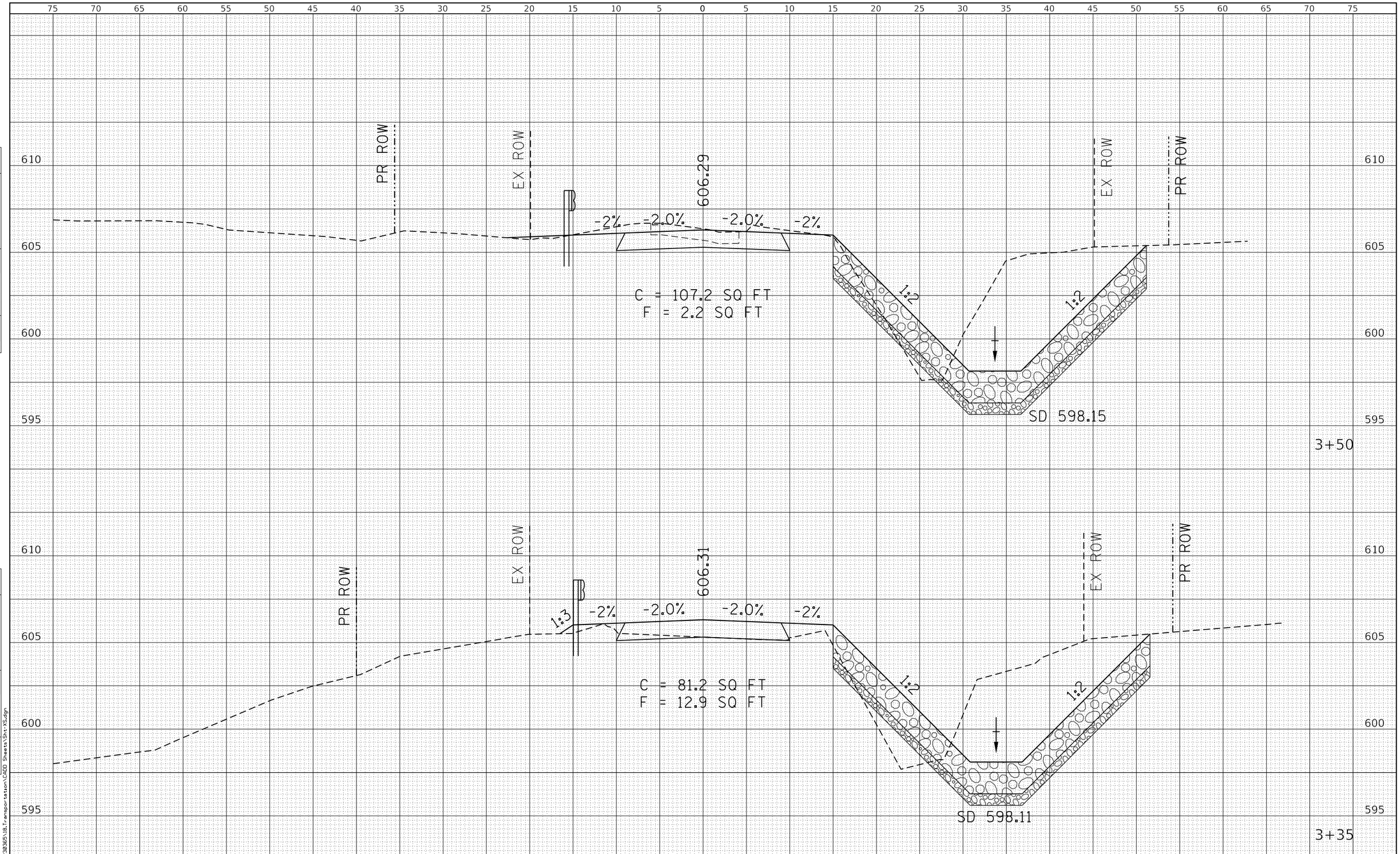

FINAL SURVEY		BY	DATE
	SURVEYED		
	PLOTTED		
	TEMPLATE		
NOTE BOOK	AREAS		
	AREAS CHECKED		
NO.			

ORIGINAL SURVEY		BY	DATE
	SURVEYED		
	PLOTTED		
	TEMPLATE		
NOTE BOOK	AREAS		
	AREAS CHECKED		
NO.			

P:\Quincy\23files\230365\18.Transportation\CADD Sheets\Sht-XS.dgn

KLINGNER & ASSOCIATES, P.C.
Engineers • Architects • Surveyors
616 N.24TH ST. QUINCY, ILLINOIS 62301 217.223.3670
STATE OF ILLINOIS DESIGN FIRM NO. 184-2738

USER NAME = rjp	DESIGNED - RJP	REVISED -
	DRAWN - RJP	REVISED -
PLOT SCALE = 10.0000 ' / in.	CHECKED - EBB	REVISED -
PLOT DATE = 7/28/2025	DATE -	REVISED -

HANCOCK COUNTY HIGHWAY DEPARTMENT

TR 392 (2980E) OVER BAPTIST CREEK
CROSS SECTIONS

SCALE: 1"=5'H 1"=2.5'V | SHEET 5 OF 9 SHEETS | STA. 3+35 TO STA. 3+50

T.R. RTE.	SECTION	COUNTY	TOTAL SHEETS	SHEET NO.
392	24-08117-00-BR	HANCOCK	26	22
		CONTRACT NO. 93845		
		ILLINOIS FED. AID PROJECT		

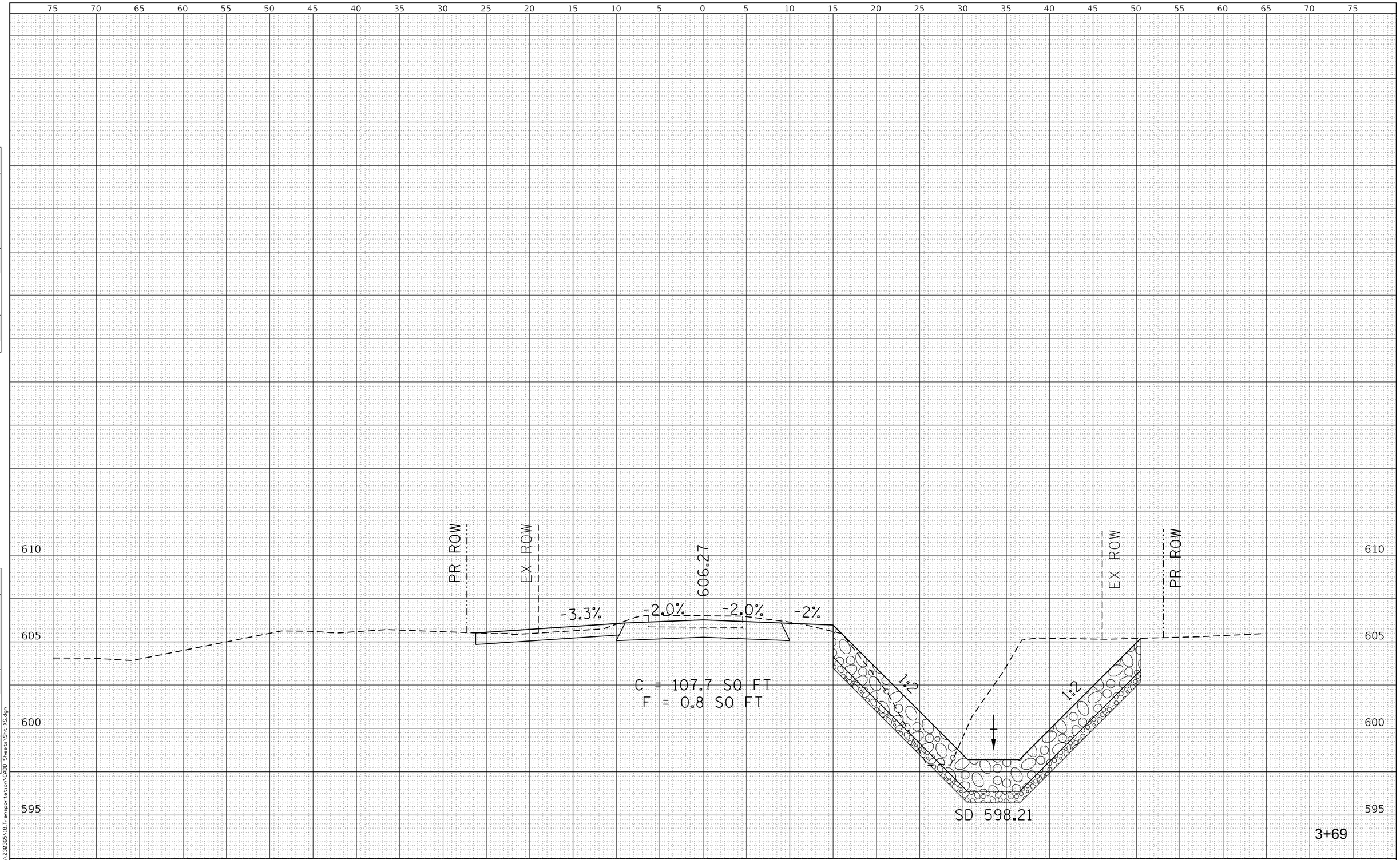

FINAL SURVEY		BY	DATE
NOTE BOOK	SURVEYED		
	PLOTTED		
	TEMPLATE		
	AREAS		
NO.	AREAS CHECKED		

ORIGINAL SURVEY		BY	DATE
NOTE BOOK	SURVEYED		
	PLOTTED		
	TEMPLATE		
	AREAS		
NO.	AREAS CHECKED		

P:\Quincy\23files\230365\18.Transportation\CADD Sheets\Sht-XS.dgn

KLINGNER & ASSOCIATES, P.C.
Engineers • Architects • Surveyors
619 N.24TH ST. QUINCY, ILLINOIS 62301 217.223.3670
STATE OF ILLINOIS DESIGN FIRM NO. 184-2738

USER NAME = rjp	DESIGNED - RJP	REVISED -
	DRAWN - RJP	REVISED -
PLOT SCALE = 10.0000 ' / in.	CHECKED - EBB	REVISED -
PLOT DATE = 7/28/2025	DATE -	REVISED -

HANCOCK COUNTY HIGHWAY DEPARTMENT

TR 392 (2980E) OVER BAPTIST CREEK
CROSS SECTIONS

SCALE: 1"=5'H 1"=2.5'V | SHEET 6 OF 9 SHEETS | STA. 3+69 TO STA. 3+69

T.R. RTE.	SECTION	COUNTY	TOTAL SHEETS	SHEET NO.
392	24-08117-00-BR	HANCOCK	26	23

CONTRACT NO. 93845

ILLINOIS FED. AID PROJECT

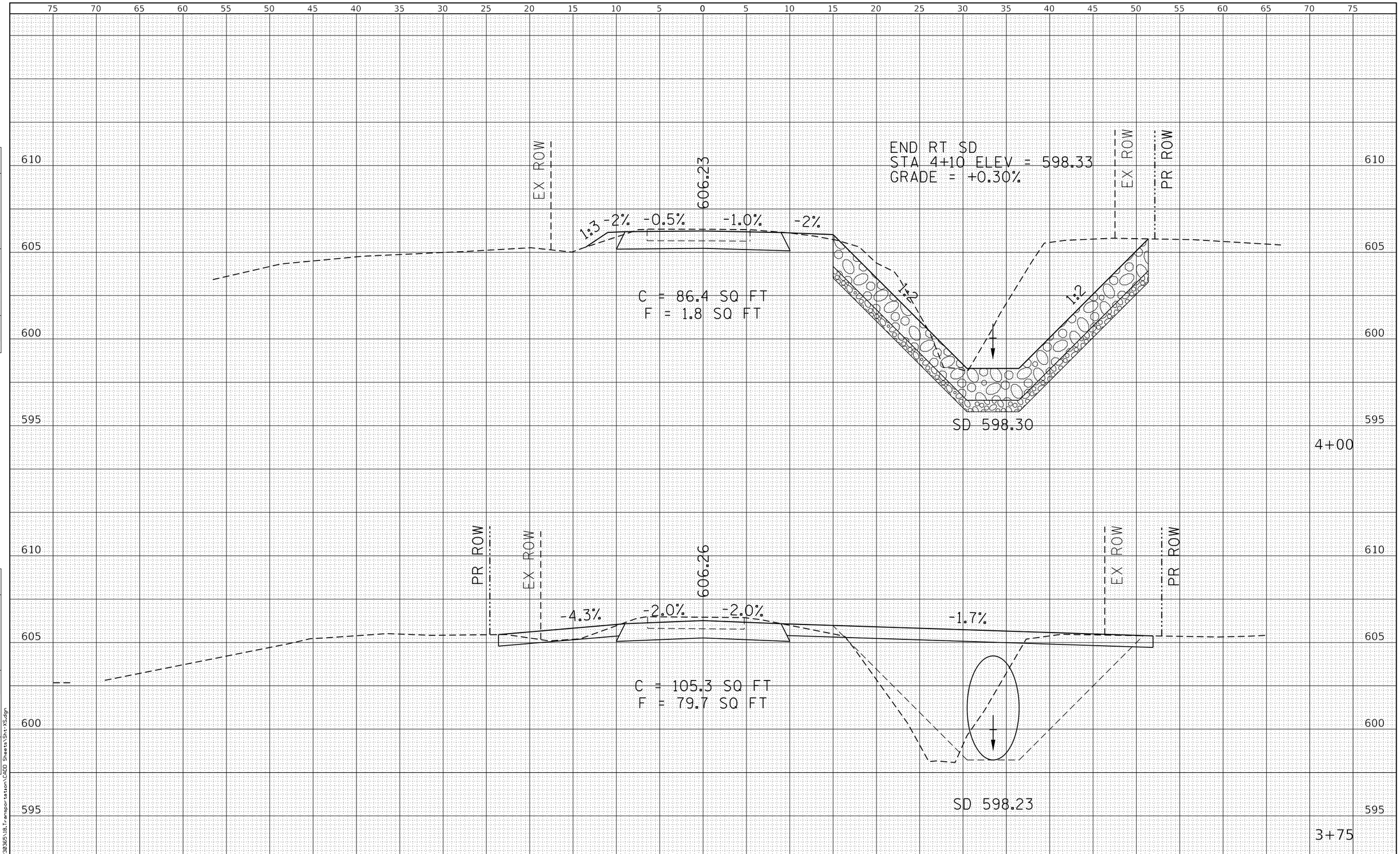

FINAL SURVEY		BY	DATE
NOTE BOOK	SURVEYED		
	PLOTTED		
	TEMPLATE		
	AREAS		
NO.	AREAS CHECKED		

ORIGINAL SURVEY		BY	DATE
NOTE BOOK	SURVEYED		
	PLOTTED		
	TEMPLATE		
	AREAS		
NO.	AREAS CHECKED		

P:\Quincy\23files\230365\18.Transportation\CADD Sheets\Sht-XS.dgn

KLINGNER & ASSOCIATES, P.C.
Engineers • Architects • Surveyors
616 N.24TH ST. QUINCY, ILLINOIS 62301 217.223.3670
STATE OF ILLINOIS DESIGN FIRM NO. 184-2738

USER NAME = rjp	DESIGNED - RJP	REVISED -
	DRAWN - RJP	REVISED -
PLOT SCALE = 10.0000 ' / in.	CHECKED - EBB	REVISED -
PLOT DATE = 7/28/2025	DATE -	REVISED -

HANCOCK COUNTY HIGHWAY DEPARTMENT

TR 392 (2980E) OVER BAPTIST CREEK
CROSS SECTIONS

SCALE: 1"=5'H 1"=2.5'V | SHEET 7 OF 9 SHEETS | STA. 3+75 TO STA. 4+00

T.R. RTE.	SECTION	COUNTY	TOTAL SHEETS	SHEET NO.
392	24-08117-00-BR	HANCOCK	26	24
		CONTRACT NO. 93845		
		ILLINOIS FED. AID PROJECT		

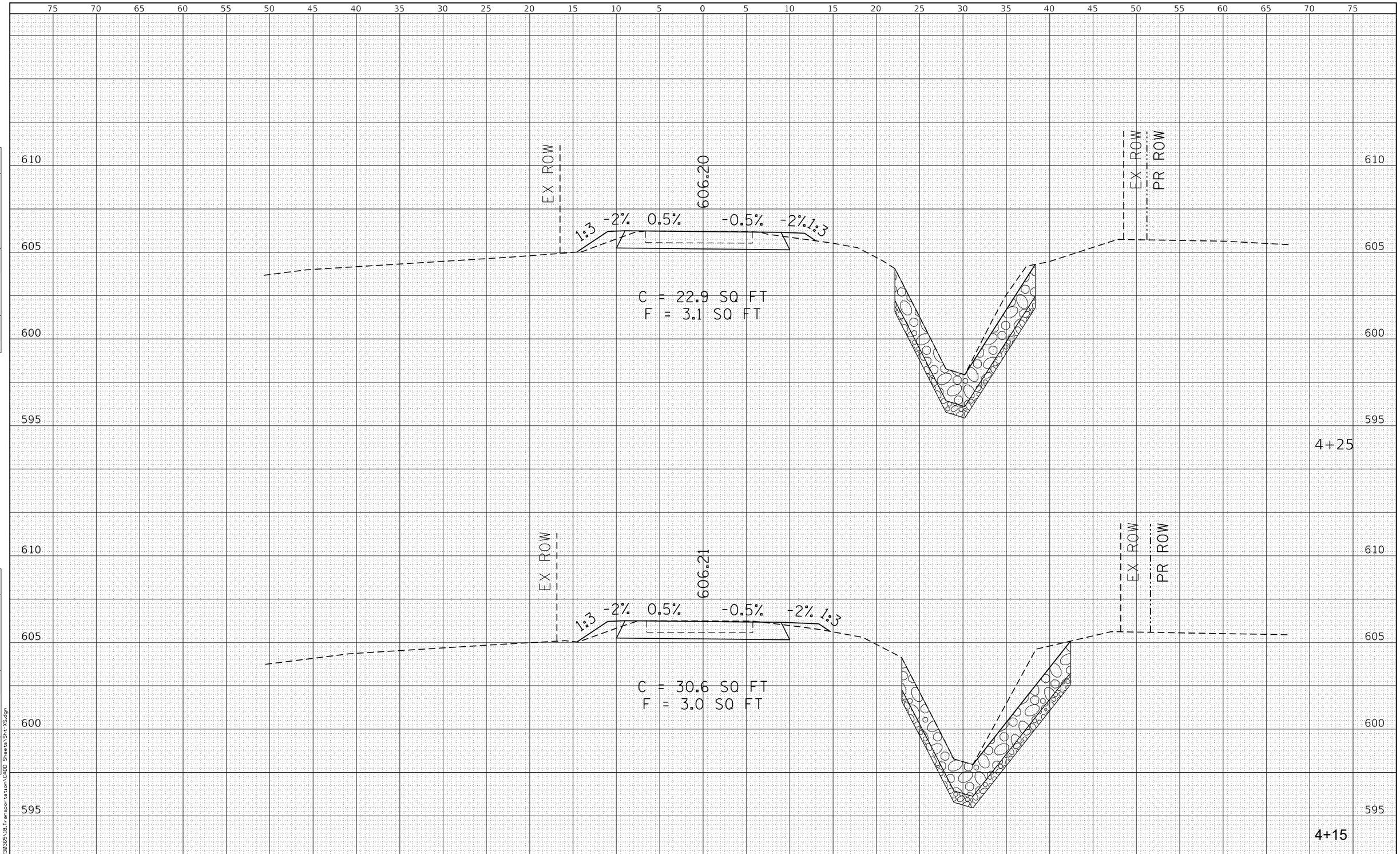

FINAL SURVEY		BY	DATE
	SURVEYED		
	PLOTTED		
	TEMPLATE		
NOTE BOOK	AREAS		
	AREAS CHECKED		
NO.			

ORIGINAL SURVEY		BY	DATE
	SURVEYED		
	PLOTTED		
	TEMPLATE		
NOTE BOOK	AREAS		
	AREAS CHECKED		
NO.			

P:\Quincy\23files\230365\18.Transportation\CADD Sheets\Sht-XS.dgn

KLINGNER & ASSOCIATES, P.C.
Engineers • Architects • Surveyors
616 N.24TH ST. QUINCY, ILLINOIS 62301 217.223.3670
STATE OF ILLINOIS DESIGN FIRM NO. 184-2738

USER NAME = rjp	DESIGNED - RJP	REVISED -
	DRAWN - RJP	REVISED -
PLOT SCALE = 10.0000 ' / in.	CHECKED - EBB	REVISED -
PLOT DATE = 7/28/2025	DATE -	REVISED -

HANCOCK COUNTY HIGHWAY DEPARTMENT

TR 392 (2980E) OVER BAPTIST CREEK
CROSS SECTIONS

SCALE: 1"=5'H 1"=2.5'V | SHEET 8 OF 9 SHEETS | STA. 4+15 TO STA. 4+25

T.R. RTE.	SECTION	COUNTY	TOTAL SHEETS	SHEET NO.
392	24-08117-00-BR	HANCOCK	26	25

CONTRACT NO. 93845

ILLINOIS FED. AID PROJECT

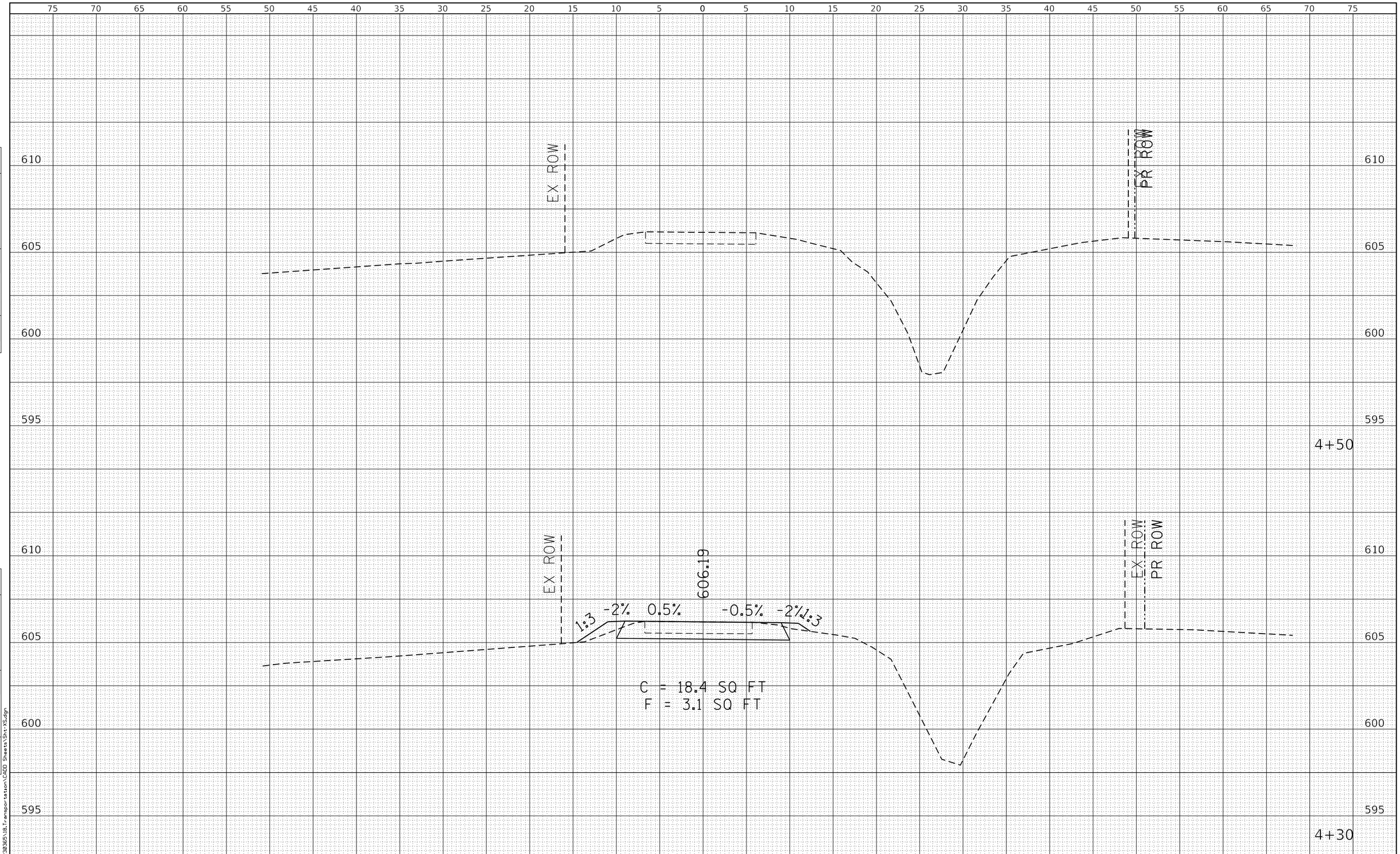

FINAL SURVEY		BY	DATE
NOTE BOOK	SURVEYED		
	PLOTTED		
	TEMPLATE		
	AREAS		
NO.	AREAS CHECKED		

ORIGINAL SURVEY		BY	DATE
NOTE BOOK	SURVEYED		
	PLOTTED		
	TEMPLATE		
	AREAS		
NO.	AREAS CHECKED		

P:\Quincy\23files\230365\18.Transportation\CADD Sheets\Sht-XS.dgn

KLINGNER & ASSOCIATES, P.C.
Engineers • Architects • Surveyors
616 N.24TH ST. QUINCY, ILLINOIS 62301 217.223.3670
STATE OF ILLINOIS DESIGN FIRM NO. 184-2738

USER NAME = rjp	DESIGNED - RJP	REVISED -
	DRAWN - RJP	REVISED -
PLOT SCALE = 10.0000 ' / in.	CHECKED - EBB	REVISED -
PLOT DATE = 7/28/2025	DATE -	REVISED -

HANCOCK COUNTY HIGHWAY DEPARTMENT

TR 392 (2980E) OVER BAPTIST CREEK
CROSS SECTIONS

SCALE: 1"=5'H 1"=2.5'V | SHEET 9 OF 9 SHEETS | STA. 4+30 TO STA. 4+50

T.R. RTE.	SECTION	COUNTY	TOTAL SHEETS	SHEET NO.
392	24-08117-00-BR	HANCOCK	26	26

CONTRACT NO. 93845

ILLINOIS FED. AID PROJECT