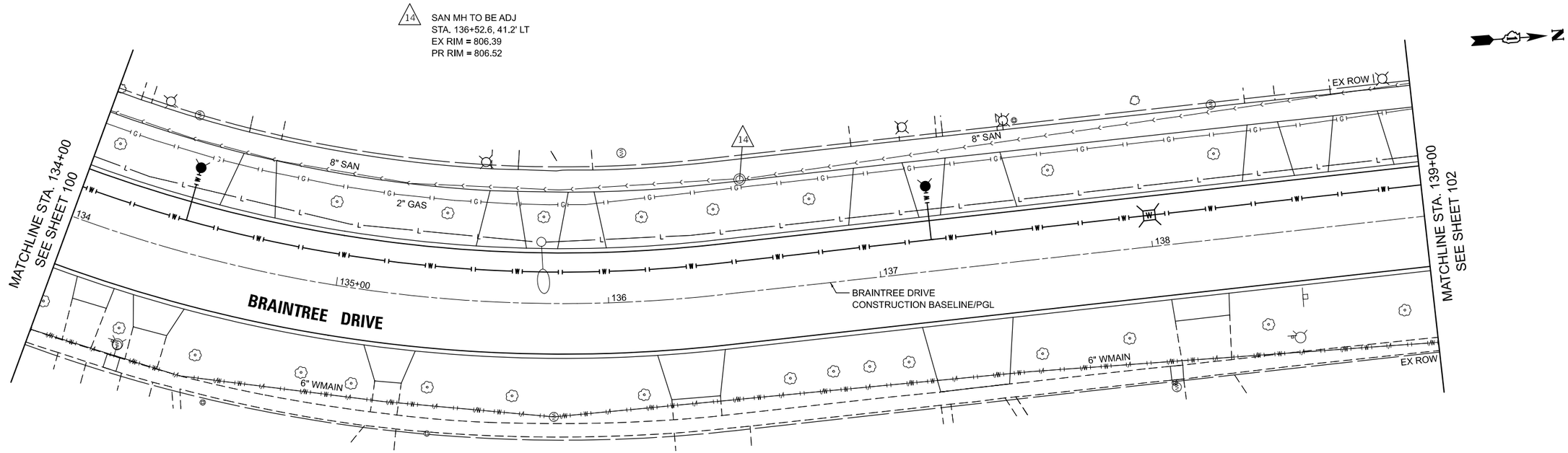

0 20 40 60
SCALE IN FEET

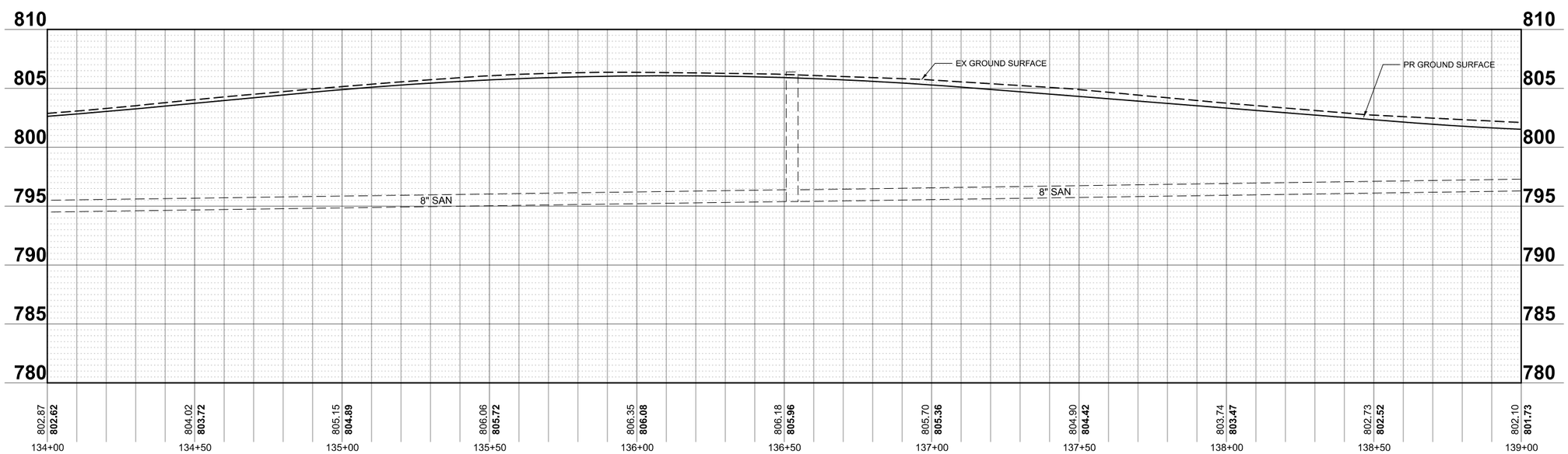

MODEL: Braintree - Sheet 8 [Sheet]
FILE NAME: c:\bms\dwltech-pw\petro.kravets\d0140565\3993 DnUs.dgn

USER NAME = pk	DESIGNED - EML	REVISED -	
	DRAWN - EML	REVISED -	
	CHECKED - TKL	REVISED -	
PLOT DATE = 12/15/2025	DATE - 12/12/2025	REVISED -	

STATE OF ILLINOIS
DEPARTMENT OF TRANSPORTATION

BRAINTREE DRIVE
DRAINAGE AND UTILITIES

SCALE: 1"=20' | SHEET 8 OF 14 SHEETS | STA. 134+00.00 TO STA. 139+00.00

MUN RTE.	SECTION	COUNTY	TOTAL SHEETS	SHEET NO.
4029	23-00146-00-PV	COOK	315	101

CONTRACT NO. 61M26

ILLINOIS | FED. AID PROJECT

35 INLET TA T11F&G
STA 139+50.7, 18.5' LT
RIM = 800.87
INV = 797.52 (E)

36 CB TA 4 DIA T11F&G
STA 139+50.7, 18.5' RT
RIM = 800.87
INV = 797.37 (N/W)

37 CB TA 4 DIA T11VF&G
STA 139+68.4, 18.5' RT
RIM = 800.91
INV = 797.30 (S/W)
INV = 797.30 (EX E)

38 INLET TA T1F OL
STA. 139+71.0, 18.5' LT
RIM = 800.92
INV = 797.45 (E)

39 MH TO BE ADJ
STA. 143+06.3, 24.1' LT
EX RIM = 802.41
PR RIM = 802.26

15 SAN MH TO BE ADJ
STA. 140+37.1, 41.4' LT
EX RIM = 802.94
PR RIM = 802.97

22 34' - STORM SEWER WM REQ, 12" @ 0.44%
TBF = 4 CU YD

23 16' - STORM SEWER CL A 1, 12" @ 0.44%
TBF = 2 CU YD

24 35' - STORM SEWER WM REQ, 12" @ 0.44%
TBF = 4 CU YD

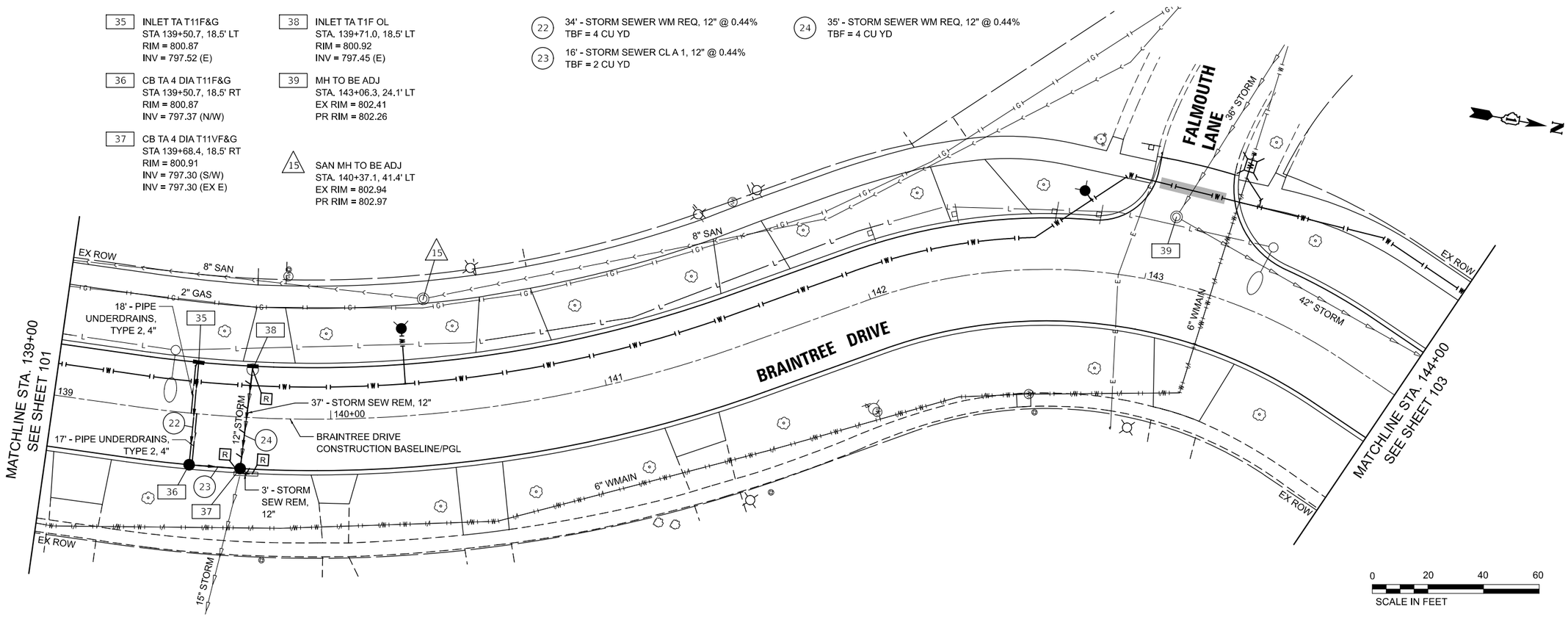

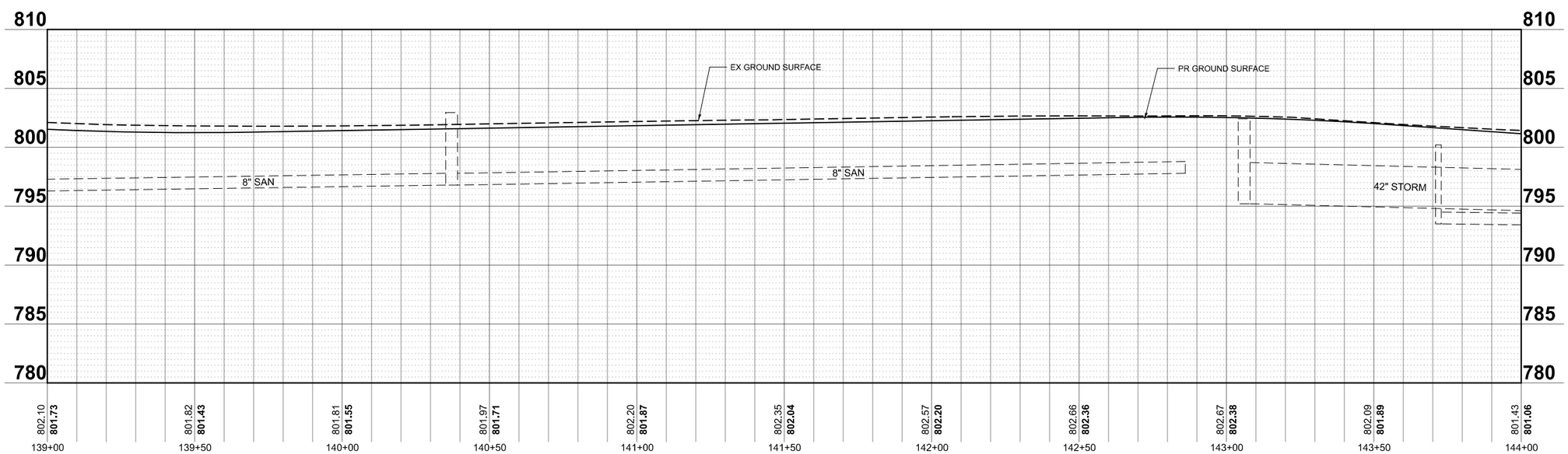

MODEL: Braintree - Sheet 9 [Sheet]
FILE NAME: c:\bms\civiltech-pw\erin.lisac\d0140565\3993 DnUs.dgn

USER NAME = EML	DESIGNED - EML	REVISED -	STATE OF ILLINOIS DEPARTMENT OF TRANSPORTATION
	DRAWN - EML	REVISED -	
	CHECKED - TKL	REVISED -	
PLOT DATE = 12/15/2025	DATE - 12/12/2025	REVISED -	

BRAINTREE DRIVE
DRAINAGE AND UTILITIES

SCALE: 1"=20' | SHEET 9 OF 14 SHEETS | STA. 139+00.00 TO STA. 144+00.00

MUN RTE.	SECTION	COUNTY	TOTAL SHEETS	SHEET NO.
4029	23-00146-00-PV	COOK	315	102

CONTRACT NO. 61M26

ILLINOIS | FED. AID PROJECT

40 MH TO BE RECON
STA 144+42.9, 19.9' LT
EX RIM = 800.36
PR RIM = 800.08

41 MAN TA 6 DIA T11F&G
STA 144+89.9, 18.5' LT
RIM = 799.79
INV = 793.85 (EX N/EX S)
INV = 794.79 (E)

42 CB TA 4 DIA T11F&G
STA 144+89.8, 18.5' RT
RIM = 799.79
INV = 794.93 (W)

43 CB TO BE RECON
STA. 145+05.1, 19.7 LT
EX RIM = 799.88
PR RIM = 799.82

44 MH TO BE RECON
STA. 145+23.6, 30.9 LT
EX RIM = 800.26
PR RIM = 799.25

45 MH TO BE RECON
STA. 145+03.8, 19.9 RT
EX RIM = 799.61
PR RIM = 799.82

46 CB TO BE RECON
STA. 145+21.3, 19.8' LT
EX RIM = 799.74
PR RIM = 799.92

47 MH TO BE RECON
STA. 145+62.8, 34.7 LT
EX RIM = 800.05
PR RIM = 799.70

48 MH TO BE ADJ
STA. 147+86.8, 10.7 LT
EX RIM = 807.57
PR RIM = 807.30

49 MAN TA 6 DIA T1F OL
STA. 147+97.7, 12.4 RT
RIM = 807.60
INV = 794.06 (EX 42" N/EX 42" S)
INV = 802.38 (E)

50 CB TA 4 DIA T11VF&G
STA. 147+95.6,18.5 RT
RIM = 807.41
INV = 802.41 (W)

51 MH TO BE ADJ
STA. 148+31.3, 24.2 RT
EX RIM = 809.84
PR RIM = 809.00

25 32' - STORM SEWER CL A 2, 12" @ 0.44%
TBF = 9 CU YD

26 3' - STORM SEWER CL A 2, 12" @ 1.00%
TBF = 1 CU YD

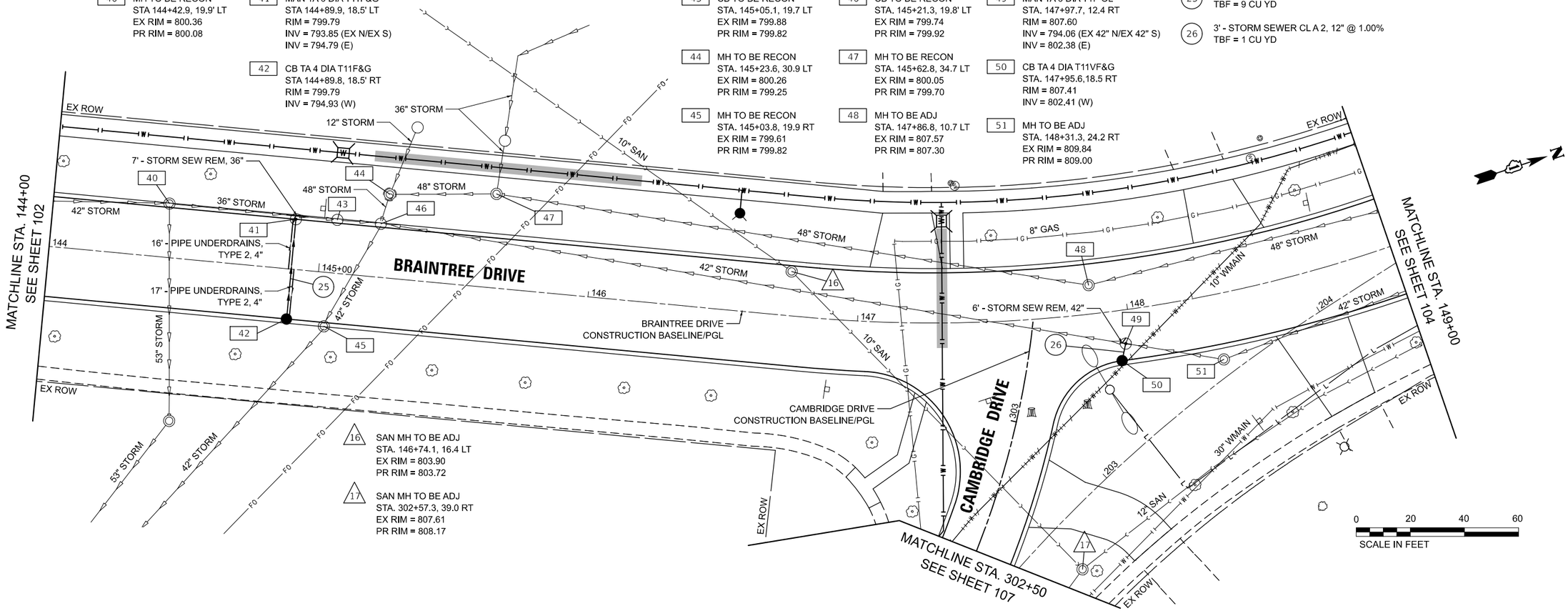

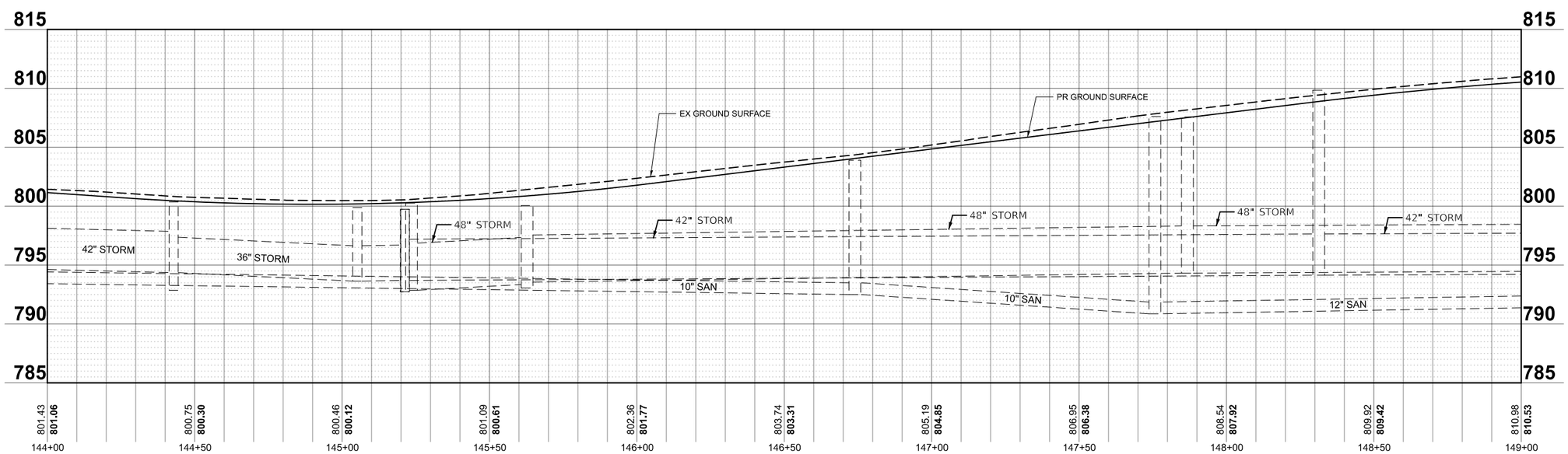

MODEL: Braintree - Sheet 10 [Sheet]
FILE NAME: c:\bms\kiltech-pw\petro.kravets\d0140565\3993 DnUs.dgn

USER NAME = pk	DESIGNED - EML	REVISED -	
	DRAWN - EML	REVISED -	
	CHECKED - TKL	REVISED -	
PLOT DATE = 12/15/2025	DATE - 12/12/2025	REVISED -	

STATE OF ILLINOIS
DEPARTMENT OF TRANSPORTATION

BRAINTREE DRIVE
DRAINAGE AND UTILITIES

SCALE:1"=20' | SHEET 10 OF 14 SHEETS | STA. 144+00.00 TO STA. 149+00.00

MUN RTE.	SECTION	COUNTY	TOTAL SHEETS	SHEET NO.
4029	23-00146-00-PV	COOK	315	103

CONTRACT NO. 61M26

ILLINOIS | FED. AID PROJECT

52 MH TO BE ADJ
STA. 150+66.5, 10.5' RT
EX RIM = 810.90
PR RIM = 810.59

53 INLET TA T11VF&G
STA. 151+40.1, 18.5' RT
RIM = 808.89
INV = 803.31 (NW)

54 CB TA 4 DIA T11VF&G
STA 151+62.5, 18.5' LT
RIM = 808.30
INV = 803.10 (NE/SE)

55 CB TA 4 DIA T11F&G
STA 151+89.6, 51.2' LT
RIM = 807.00
INV = 803.09 (EX 12" N)

56 MH TO BE ADJ
STA. 151+86.7, 7.3' LT
EX RIM = 808.31
PR RIM = 807.89
INV = 803.00 (SW)
INV = 794.51 (EX 48" N/EX 48" S)
INV = 800.81 (EX 24" W)

57 MH TO BE ADJ
STA. 152+09.0, 10.0' RT
EX RIM = 807.62
PR RIM = 807.25

58 MH TO BE RECON
STA. 152+11.9, 7.1' LT
EX RIM = 807.73
PR RIM = 807.24

59 CB TO BE ADJ
STA. 152+16.2, 55.4' LT
EX RIM = 806.75
PR RIM =806.99

60 MH TO BE RECON
STA. 152+11.5, 20.0' LT
EX RIM = 807.48
PR RIM = 807.02

18 SAN MH TO BE ADJ
STA. 149+49.0, 31.2 RT
EX RIM = 811.42
PR RIM = 811.30

27 41' - STORM SEW CL A 2, 12" @ 0.50%
TBF = 13 CU YD

28 20' - STORM SEWER WM REQ, 12" @ 0.50%
TBF = 6 CU YD

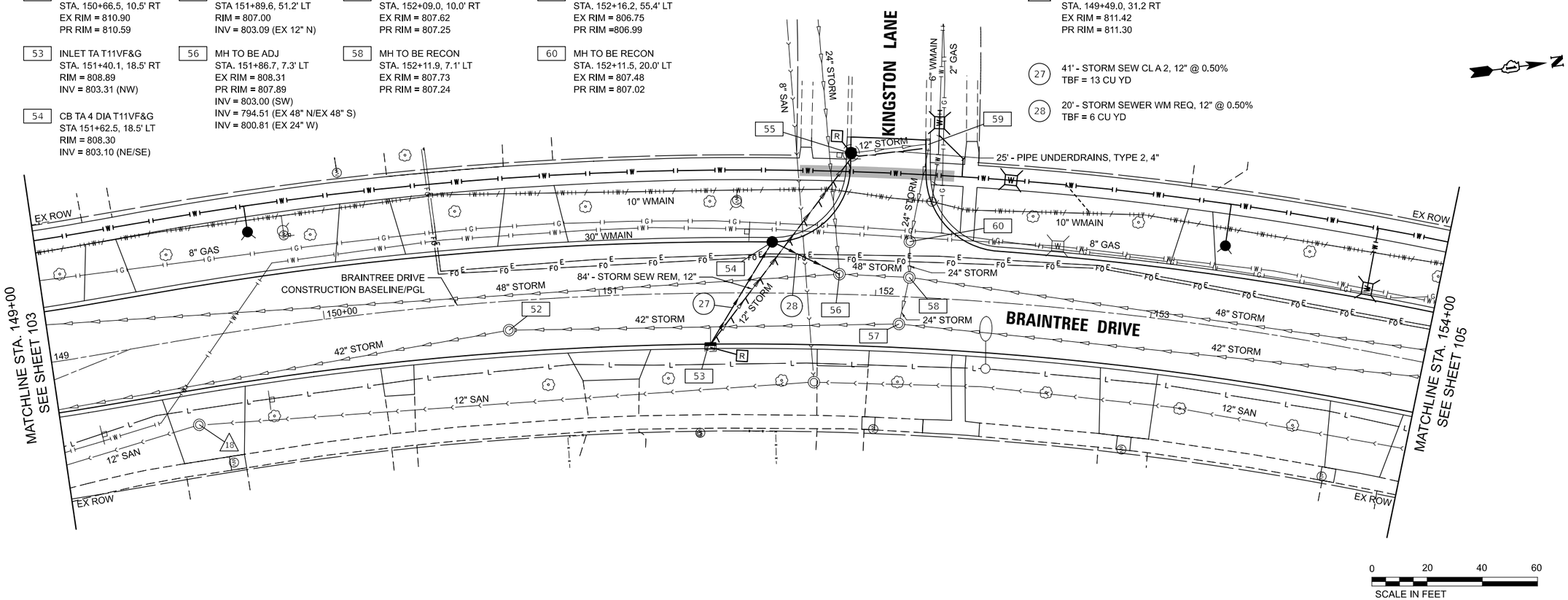

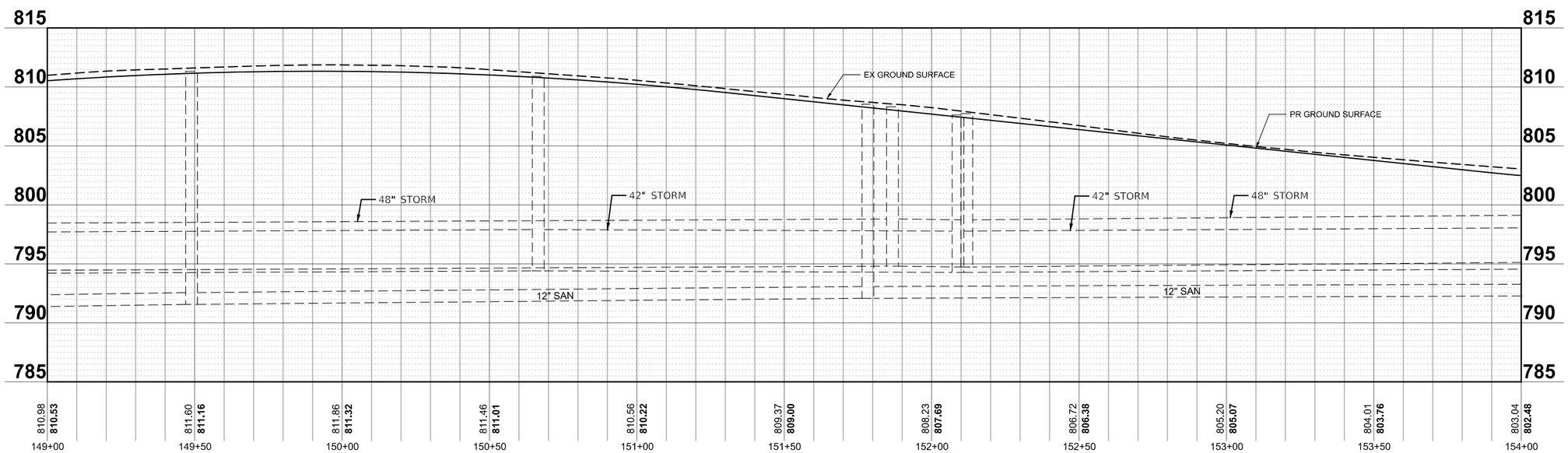

MODEL: Braintree - Sheet 11 [Sheet]
FILE NAME: c:\bms\dvltech-pw\petro.kravets\d0140565\3993 DnUs.dgn

USER NAME = pk	DESIGNED - EML	REVISED -	
	DRAWN - EML	REVISED -	
	CHECKED - TKL	REVISED -	
PLOT DATE = 12/15/2025	DATE - 12/12/2025	REVISED -	

STATE OF ILLINOIS
DEPARTMENT OF TRANSPORTATION

BRAINTREE DRIVE
DRAINAGE AND UTILITIES

SCALE:1"=20' | SHEET 11 OF 14 SHEETS | STA. 149+00.00 TO STA. 154+00.00

MUN RTE.	SECTION	COUNTY	TOTAL SHEETS	SHEET NO.
4029	23-00146-00-PV	COOK	315	104

CONTRACT NO. 61M26

ILLINOIS | FED. AID PROJECT

61 CB TO BE RECON
STA. 154+20.8, 19.9' LT
EX RIM = 802.01
PR RIM = 801.68

62 MH TO BE ADJ
STA. 154+19.6, 5.9' LT
EX RIM = 802.46
PR RIM = 801.95
INV = 797.16 (N)
INV = UNK (EX 48" NE)
INV = 795.36 (EX 12" E)
INV = 795.16 (EX 48" S)
INV = 795.16(EX 18" W)

63 MH TO BE RECON
STA. 154+18.0, 3.4' RT
EX RIM = 802.72
PR RIM = 802.03

64 MH TO BE ADJ
STA. 154+83.2, 46.2' LT
EX RIM = 801.14
PR RIM = 801.33

65 MAN TA 5 DIA T1F CL
STA 154+83.9, 7.5' LT
RIM = 801.10
INV = 797.43 (N/S)

66 CB TA 4 DIA T11VF&G
STA. 154+87.1, 18.6' RT
RIM = 800.86
INV = 795.02 (N/W)

67 MAN TA 6 DIA T1F CL
STA 154+87.7, 13.2' RT
RIM = 800.96
INV = 794.62 (EX 42" N/EX 42" S)
INV = 795.00 (E)

68 CB TA 4 DIA T11F&G
STA 155+17.3, 17.6' LT
RIM = 800.79
INV = 797.56 (S)

69 INLETS TA T11F&G
STA 155+17.8, 18.0' RT
RIM = 800.78
INV = 795.16 (S)

70 CB TA 4 DIA T11VF&G
STA. 155+72.4, 21.2' LT
RIM = 801.12
INV = 795.97 (E)

71 MH TO BE ADJ
W NEW T1F OL
(ADA COMPLIANT)
STA. 155+83.7, 48.3' LT
EX RIM = 800.35
PR RIM = 800.35

72 MH TO BE ADJ
STA. 402+62.6, 30.8' RT
EX RIM = 800.37
PR RIM = 801.34

73 CB TA 4 DIA T1F OL
STA. 402+07.1, 38.7' RT
RIM = 800.60
INV = 796.83 (NE)

74 MAN TA 7 DIA T11VF&G
STA 155+81.7, 20.7' RT
RIM = 801.04
INV = 794.74 (N/EX 42" S)
INV = 795.40 (W)

75 CB TA 4 DIA T11VF&G
STA 403+65.4, 22.0' RT
RIM = 800.76
INV = 795.08 (NE)

76 CB TA 4 DIA T11VF&G
STA 402+23.8, 16.9' RT
RIM = 801.23
INV = 796.72 (N/E/SW)

77 CB TA 4 DIA T11F&G
STA 402+56.7, 21.5' RT
RIM = 801.02
INV = 796.60 (W/NE/EX 15" S)

78 INLETS TA T11VF&G
STA 402+24.1, 17.8' LT
RIM = 801.19
INV = 796.86 (S)

79 CB TA 4 DIA T11F&G
STA 402+57.7, 26.5' LT
RIM = 800.94
INV = 796.79 (S)

80 CB TA 4 DIA T11VF&G
STA 403+65.4, 21.2' LT
RIM = 800.99
INV = 794.91 (NW/SW/E)

81 MAN TA 6 DIA T11VF&G
STA 156+64.5, 39.5' RT
RIM = 801.40
INV = 794.84 (SW/SE)
INV = 795.44 (N)

82 CB TA 5 DIA T11VF&G
STA 156+97.2, 20.9' RT
RIM = 801.29
INV = 795.53 (NE/SE/NW)

83 MAN TA 7 DIA T8G
STA 156+91.0, 28.9' RT
RIM = 801.61
INV = 795.48 (S/NW)
INV = 797.19 (EX 21" NE)

84 CB TA 4 DIA T11VF&G
STA 404+29.7, 17.5' RT
RIM = 800.38
INV = 796.17 (N)
INV = 797.02 (EX 12" S)

85 CB TA 4 DIA T11F&G
STA 404+45.8, 17.9' RT
RIM = 800.36
INV = 796.42 (N)
INV = 796.47 (EX 12" S)

86 CB TA 4 DIA T11VF&G
STA 404+41.7, 16.9' LT
RIM = 800.64
INV = 796.02 (S)
INV = 795.97 (N)

87 CB TA 5 DIA T11F&G
STA 404+26.2, 17.0' LT
RIM = 800.57
INV = 796.02 (S)
INV = 795.02 (W)
INV = 795.12 (NE)

88 CB TA 4 DIA T11VF&G
STA 157+04.6, 19.2' LT
RIM = 801.16
INV = 795.70 (E)

89 INLETS TA T11F&G
STA 157+35.0, 17.0' LT
RIM = 801.10
INV = 795.83 (E)

90 CB TA 4 DIA T11F&G
STA 157+35.0, 17.0' RT
RIM = 801.10
INV = 795.69 (W/S)

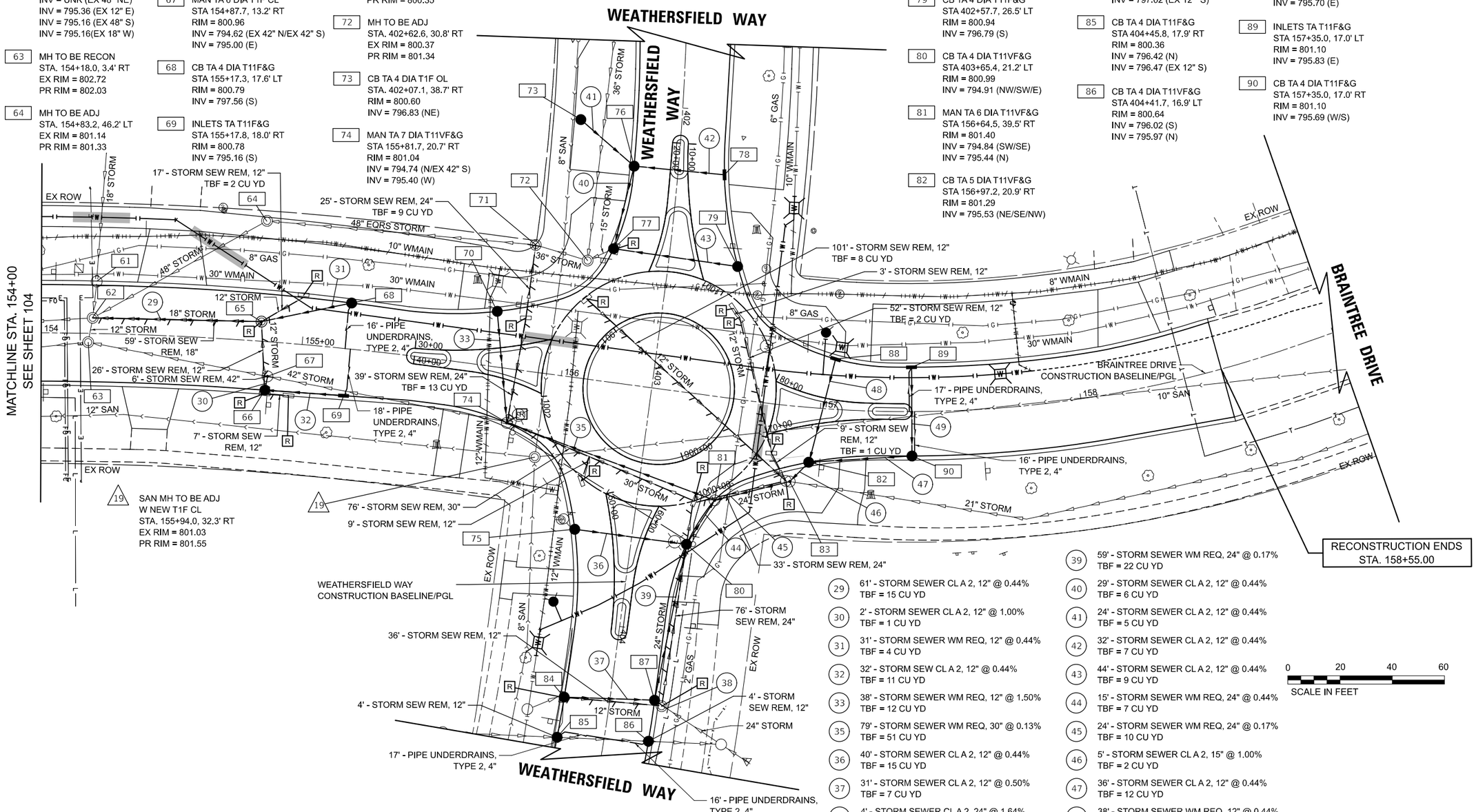

29 61' - STORM SEWER CL A 2, 12" @ 0.44%
TBF = 15 CU YD

30 2' - STORM SEWER CL A 2, 12" @ 1.00%
TBF = 1 CU YD

31 31' - STORM SEWER WM REQ, 12" @ 0.44%
TBF = 4 CU YD

32 32' - STORM SEW CL A 2, 12" @ 0.44%
TBF = 11 CU YD

33 38' - STORM SEWER WM REQ, 12" @ 1.50%
TBF = 12 CU YD

35 79' - STORM SEWER WM REQ, 30" @ 0.13%
TBF = 51 CU YD

36 40' - STORM SEWER CL A 2, 12" @ 0.44%
TBF = 15 CU YD

37 31' - STORM SEWER CL A 2, 12" @ 0.50%
TBF = 7 CU YD

38 4' - STORM SEWER CL A 2, 24" @ 1.64%
TBF = 2 CU YD

39 59' - STORM SEWER WM REQ, 24" @ 0.17%
TBF = 22 CU YD

40 29' - STORM SEWER CL A 2, 12" @ 0.44%
TBF = 6 CU YD

41 24' - STORM SEWER CL A 2, 12" @ 0.44%
TBF = 5 CU YD

42 32' - STORM SEWER CL A 2, 12" @ 0.44%
TBF = 7 CU YD

43 44' - STORM SEWER CL A 2, 12" @ 0.44%
TBF = 9 CU YD

44 15' - STORM SEWER WM REQ, 24" @ 0.44%
TBF = 7 CU YD

45 24' - STORM SEWER WM REQ, 24" @ 0.17%
TBF = 10 CU YD

46 5' - STORM SEWER CL A 2, 15" @ 1.00%
TBF = 2 CU YD

47 36' - STORM SEWER CL A 2, 12" @ 0.44%
TBF = 12 CU YD

48 38' - STORM SEWER WM REQ, 12" @ 0.44%
TBF = 13 CU YD

49 31' - STORM SEWER WM REQ 12" @ 0.44%
TBF = 10 CU YD

0 20 40 60
SCALE IN FEET

MODEL: Braintree - Sheet 12-1 [Sheet]
FILE NAME: c:\bms\dwltech-pw\petro.kravets\d0140565\3993 DnUs.dgn

USER NAME = pk	DESIGNED - EML	REVISED -	
	DRAWN - EML	REVISED -	
	CHECKED - TKL	REVISED -	
PLOT DATE = 12/15/2025	DATE - 12/12/2025	REVISED -	

STATE OF ILLINOIS
DEPARTMENT OF TRANSPORTATION

BRAINTREE DRIVE
DRAINAGE AND UTILITIES

SCALE: 1"=20' | SHEET 12 OF 14 SHEETS | STA. 154+00.00 TO STA. 159+00.00

MUN RTE.	SECTION	COUNTY	TOTAL SHEETS	SHEET NO.
4029	23-00146-00-PV	COOK	315	105

CONTRACT NO. 61M26

ILLINOIS | FED. AID PROJECT

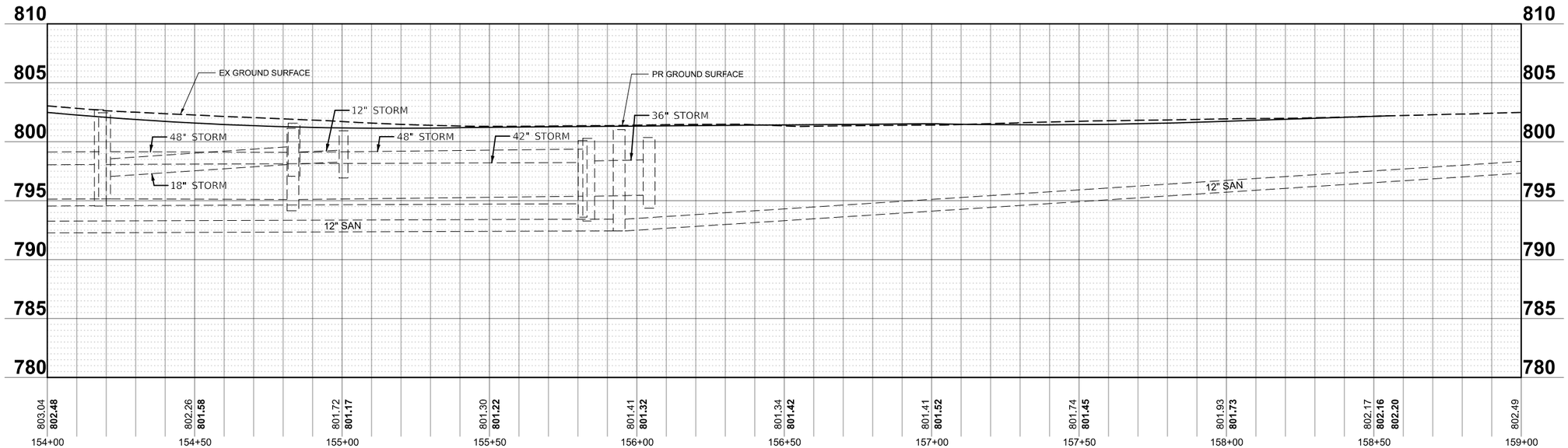

MODEL: Braintree - Sheet 12-2
FILE NAME: c:\bms\dv\tech-pw\petro.kravets\d0140565\3993 DnUs.dgn

USER NAME = pk	DESIGNED - EML	REVISED -	
	DRAWN - EML	REVISED -	
	CHECKED - TKL	REVISED -	
PLOT DATE = 12/15/2025	DATE - 12/12/2025	REVISED -	

STATE OF ILLINOIS
DEPARTMENT OF TRANSPORTATION

BRAINTREE DRIVE
DRAINAGE AND UTILITIES

SCALE: 1"=20' | SHEET 13 OF 14 SHEETS | STA. 154+00.00 TO STA. 159+00.00

MUN RTE.	SECTION	COUNTY	TOTAL SHEETS	SHEET NO.
4029	23-00146-00-PV	COOK	315	106
		CONTRACT NO. 61M26		
		ILLINOIS	FED. AID PROJECT	

91 CB TA 4 DIA T11F&G
STA. 301+95.3, 28.1' RT
RIM = 805.74
INV = 801.41 (S)

92 CB TA 4 DIA T11VF&G
STA. 301+58.5, 17.0' RT
RIM = 805.31
INV = 801.25 (N/EX 12" S)

50 37' - STORM SEWER WM REQ, 12" @ 0.44%
TBF = 8 CU YD

20 SAN MH TO BE ADJ
STA. 301+59.7, 25.2' RT
EX RIM = 806.09
PR RIM = 806.01

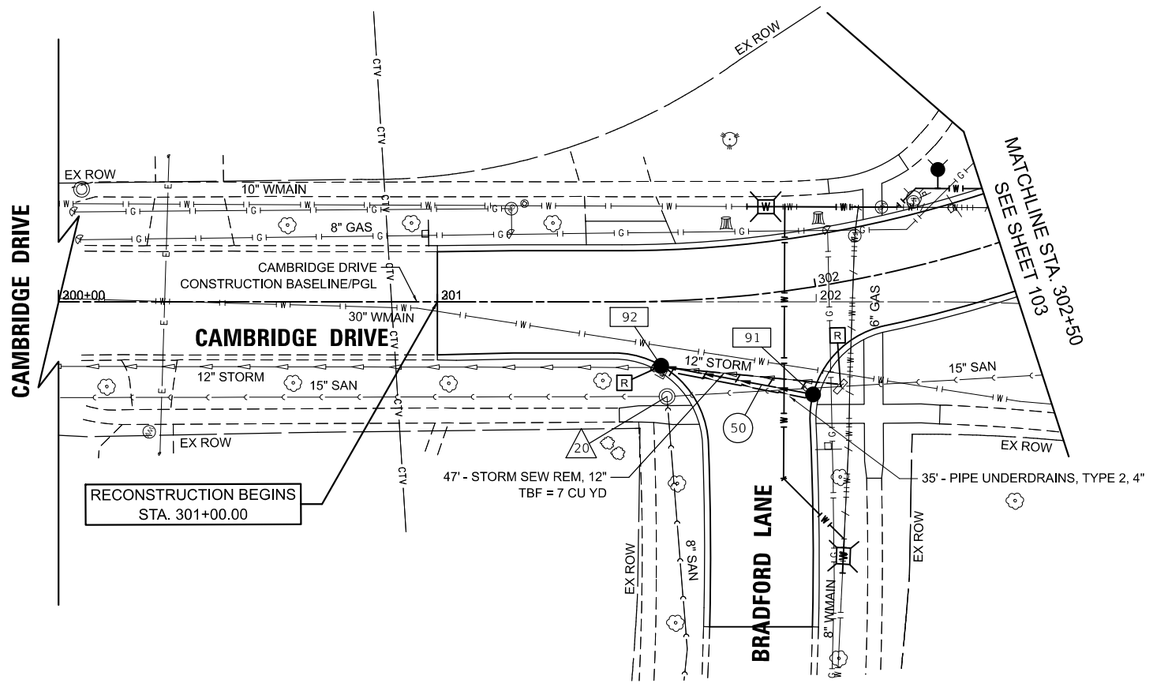

0 20 40 60
SCALE IN FEET

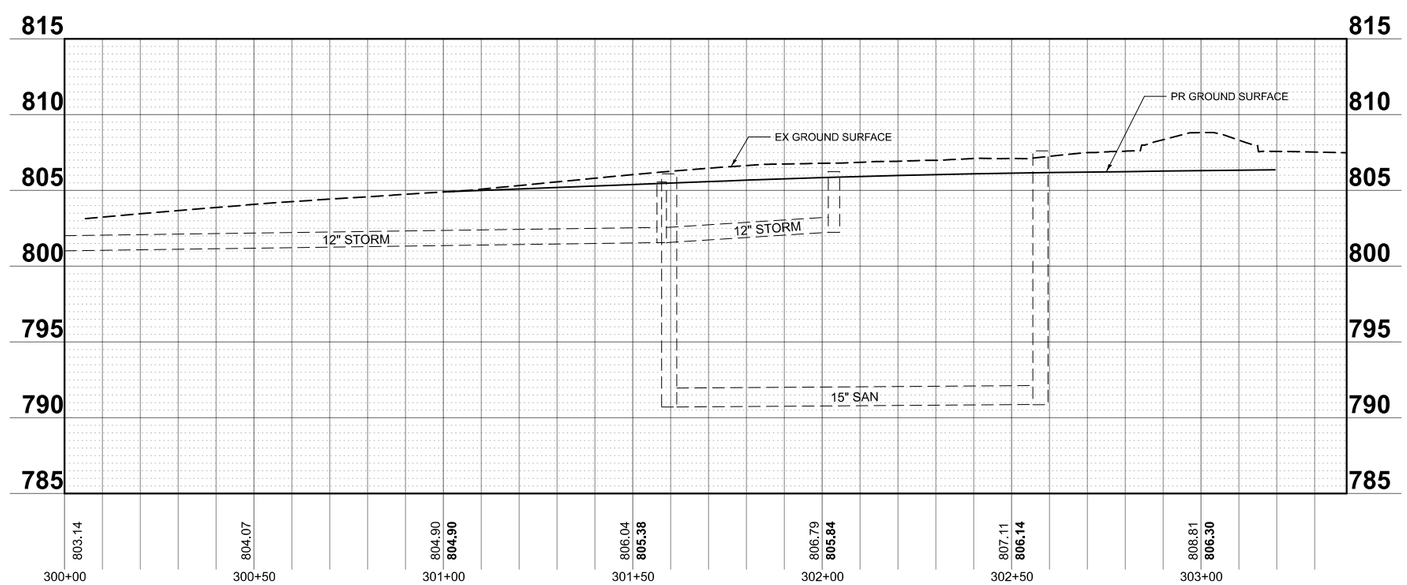

MODEL: Cambridge - Sheet 1 [Sheet]
FILE NAME: c:\bms\dwltech-pw\petro.kravets\d0140565\3993 DnUs.dgn

USER NAME = pk	DESIGNED - EML	REVISED -	
	DRAWN - EML	REVISED -	
	CHECKED - TKL	REVISED -	
PLOT DATE = 12/15/2025	DATE - 12/12/2025	REVISED -	

STATE OF ILLINOIS
DEPARTMENT OF TRANSPORTATION

CAMBRIDGE DRIVE
DRAINAGE AND UTILITIES

SCALE: 1"=20' | SHEET 14 OF 14 SHEETS | STA. 300+00.00 TO STA. 302+50.00

MUN RTE.	SECTION	COUNTY	TOTAL SHEETS	SHEET NO.
4029	23-00146-00-PV	COOK	315	107

CONTRACT NO. 61M26

ILLINOIS | FED. AID PROJECT

LEGEND

- WATER MAIN CASING PIPE
- WATER MAIN CASING JACKING SUGGESTED PIT LOCATION
- STEEL CASING PIPE, BORED AND JACKED
- EXISTING VALVE VAULT
- EXISTING VALVE BOX
- PROPOSED VALVE VAULT

NOTE:

1. MINIMUM COVER OF ALL WATER MAIN PIPES SHALL BE 5.5 FEET.
2. FOR WATER MAIN INSTALLATION AT SIDE ROAD CONNECTIONS WHERE THE EXISTING VALVE IS SHOWN TO BE REPLACED, THE TYPICAL SEQUENCE OF OPERATIONS SHALL BE AS FOLLOWS, UNLESS OTHERWISE APPROVED BY THE ENGINEER.
   A. SHUT DOWN EXISTING WATER MAIN.
   B. REMOVE EXISTING WATER VALVE AND VALVE VAULT / BOX, REMOVE WATER MAIN AS NEEDED TO INSTALL NEW VALVE AND CONNECTIONS, AS APPROVED BY THE ENGINEER.
   C. INSTALL NEW WATER VALVE AND VALVE VAULT ON SIDE ROAD MAIN.
   D. CONNECT NEW VALVE TO EXISTING WATER MAIN TO REMAIN OUTSIDE OF VAULT.

   IF THE VILLAGE DETERMINES THE NEW VALVE CAN REMAIN CLOSED, THEN:

   A. INSTALL SECTION OF WATER MAIN TOWARDS BRAINTREE WATER MAIN OUTSIDE OF VALVE VAULT. TEMPORARILY CAP AND THRUST BLOCK.
   B. TEMPORARILY CAP AND THRUST BLOCK EXISTING BRAINTREE MAIN.
   C. CLOSE NEW VALVE AND OPEN EXISTING VALVES.

   INSTALLATION AND REMOVAL OF TEMPORARY CAPS AND THRUST BLOCKS SHALL BE INCLUDED IN THE COST OF "CONNECTION TO EXISTING WATERMAIN".
3. PRIOR TO THE START OF WATERMAIN CONSTRUCTION, THE CONTRACTOR SHALL DETERMINE IF THE EXISTING TRANSMISSION MAIN AND THE DISTRIBUTION MAINS ARE CONNECTED (PAID FOR AS EXPLORATION TRENCH (SPECIAL). IF THE MAINS ARE CONNECTED, THE CONTRACTOR SHALL COORDINATE WITH THE VILLAGE AND ENGINEER TO DETERMINE IF RECONNECTION IS REQUIRED, AND IF SO, CONFIGURATION OF RECONNECTION.
4. EXISTING TRAFFIC SIGNAL CONDUIT AND CABLE SHALL REMAIN IN PLACE. CONTRACTOR SHALL WATCH AND PROTECT IN ACCORDANCE WITH THE ARTICLE 107.39 OF THE STANDARD SPECIFICATIONS.

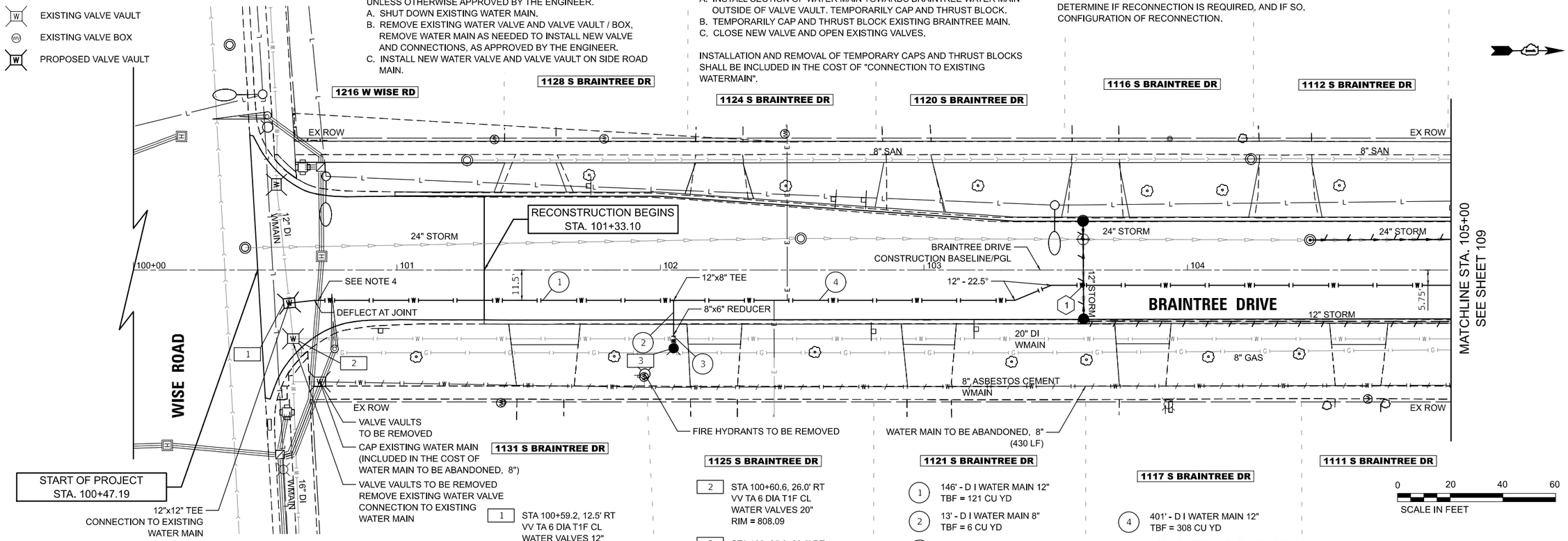

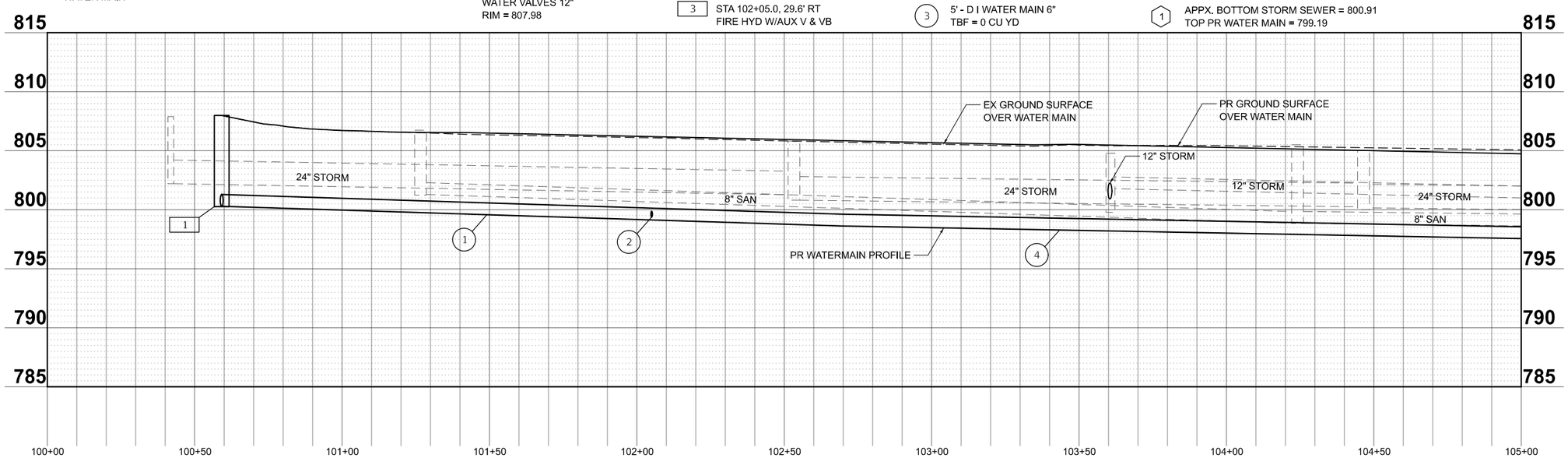

USER NAME = pk	DESIGNED - AMP	REVISED -
	DRAWN - AMP	REVISED -
	CHECKED - PK	REVISED -
PLOT DATE = 1/7/2026	DATE - 01/07/2026	REVISED -

STATE OF ILLINOIS
DEPARTMENT OF TRANSPORTATION

BRAINTREE DRIVE
WATER MAIN PLAN AND PROFILE

SCALE: 1"=20' | SHEET 1 OF 14 SHEETS | STA. 100+00.00 TO STA. 105+00.00

MUN RTE.	SECTION	COUNTY	TOTAL SHEETS	SHEET NO.
4029	23-00146-00-PV	COOK	315	108

CONTRACT NO. 61M26

ILLINOIS | FED. AID PROJECT

MODEL: Braintree - Sheet 1 [Sheet]
FILE NAME: c:\bms\dvlltech-pw\petro.kravets\d0140565\3993 Watermain.dgn

LEGEND

- WATER MAIN CASING PIPE
- WATER MAIN CASING JACKING SUGGESTED PIT LOCATION
- STEEL CASING PIPE, BORED AND JACKED
- EXISTING VALVE VAULT
- EXISTING VALVE BOX
- PROPOSED VALVE VAULT

4 STA 106+05.0, 36.2' RT
FIRE HYD W/AUX V & VB

5 STA 106+83.9, 61.5' LT
VV TA 5 DIA T1F CL
WATER VALVES 8"
RIM = 803.92

6 STA 108+00.0, 11.5' LT
VV TA 6 DIA T1F CL
WATER VALVES 12"
RIM = 804.22

4 SEE SHEET 108

5 25' - D I WATER MAIN 8"
TBF = 10 CU YD

6 5' - D I WATER MAIN 6"
TBF = 0 CU YD

7 79' - D I WATER MAIN 12"
TBF = 64 CU YD

8 68' - D I WATER MAIN 8"
TBF = 35 CU YD

9 5' - D I WATER MAIN 8"
TBF = 0 CU YD

10 124' - D I WATER MAIN 12"
TBF = 98 CU YD

11 170' - D I WATER MAIN 12"
TBF = 131 CU YD

2 APPX. BOTTOM STORM SEWER = 799.57
TOP PR WATER MAIN = 798.03

3 APPX. BOTTOM SANITARY SEWER = 798.37
TOP PR WATER MAIN CASING = 796.87

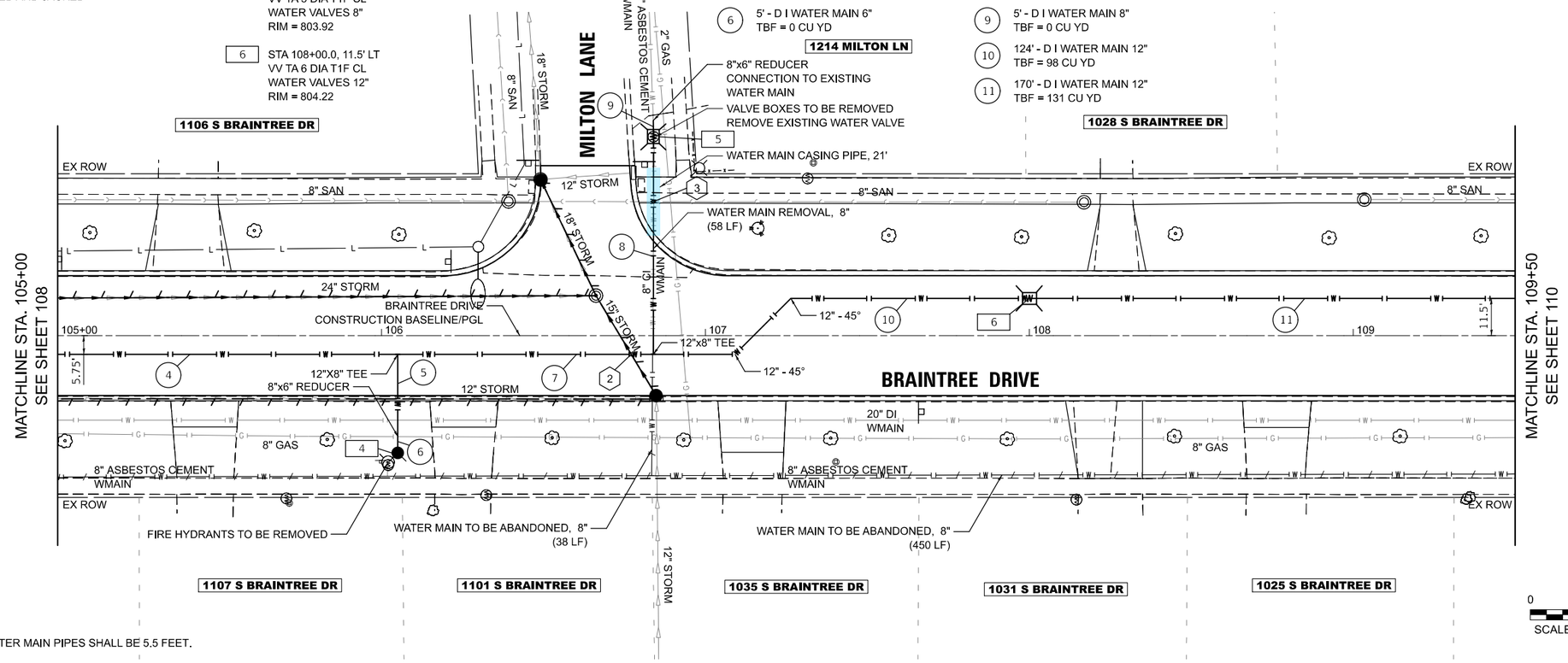

NOTE:

1. MINIMUM COVER OF ALL WATER MAIN PIPES SHALL BE 5.5 FEET.

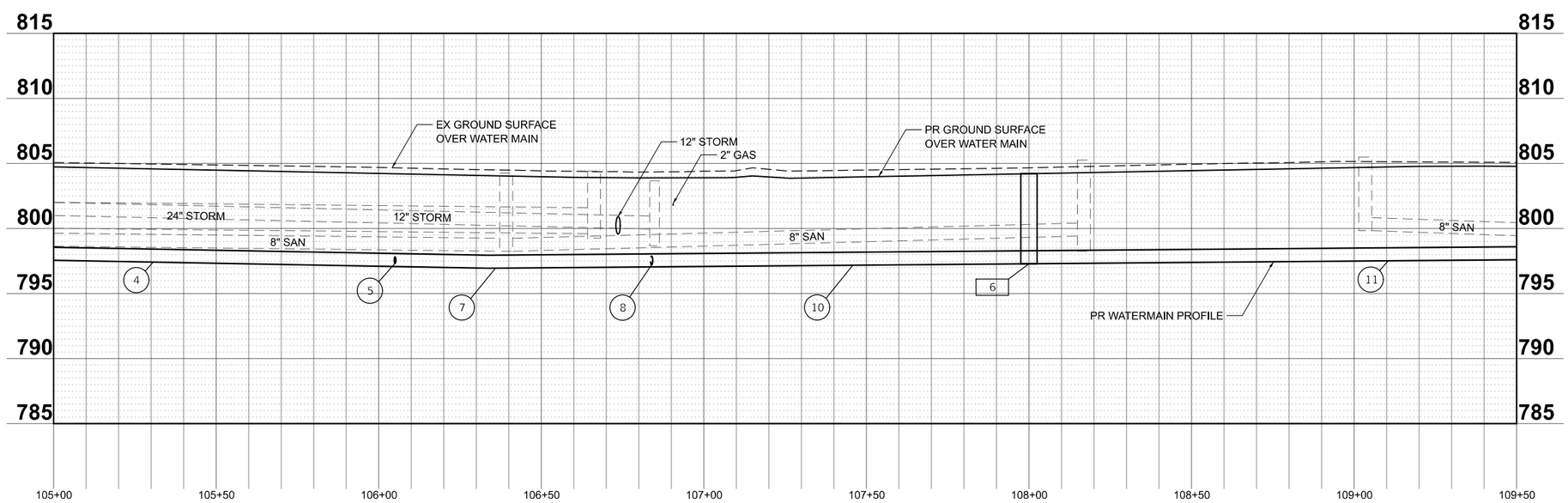

MODEL: Braintree - Sheet 2 [Sheet]
FILE NAME: c:\bms\dvltech-pw\petro.kravets\d0140565\3993 Watermain.dgn

USER NAME = pk	DESIGNED - AMP	REVISED -	STATE OF ILLINOIS DEPARTMENT OF TRANSPORTATION
	DRAWN - AMP	REVISED -	
	CHECKED - PK	REVISED -	
PLOT DATE = 1/7/2026	DATE - 01/07/2026	REVISED -	

BRAINTREE DRIVE
WATER MAIN PLAN AND PROFILE

SCALE: 1"=20' | SHEET 2 OF 14 SHEETS | STA. 105+00.00 TO STA. 109+50.00

MUN RTE.	SECTION	COUNTY	TOTAL SHEETS	SHEET NO.
4029	23-00146-00-PV	COOK	315	109

CONTRACT NO. 61M26

ILLINOIS | FED. AID PROJECT

LEGEND

- WATER MAIN CASING PIPE
- WATER MAIN CASING JACKING SUGGESTED PIT LOCATION
- STEEL CASING PIPE, BORED AND JACKED
- EXISTING VALVE VAULT
- EXISTING VALVE BOX
- PROPOSED VALVE VAULT

7 STA 109+70.0, 30.3' LT
FIRE HYD W/AUX V & VB
(SEE NOTE 2)

8 STA 110+13.2, 27.2' RT
VV TA 6 DIA T1F CL
WATER VALVES 20"
RIM = 804.78

9 STA 110+37.2, 63.6' LT
VV TA 5 DIA T1F CL
WATER VALVES 8"
RIM = 804.54

10 STA 113+00.0, 30.2' LT
FIRE HYD W/AUX V & VB

11 STA 113+35.8, 11.5' RT
VV TA 6 DIA T1F CL
WATER VALVES 12"
RIM = 801.32

12 STA 114+13.5, 55.6' RT
VV TA 6 DIA T1F CL
WATER VALVES 12"
RIM = 802.16

11 SEE SHEET 109

12 14' - D I WATER MAIN 8"
TBF = 7 CU YD

13 5' - D I WATER MAIN 6"
TBF = 0 CU YD

14 68' - D I WATER MAIN 12"
TBF = 54 CU YD

15 53' - D I WATER MAIN 8"
TBF = 26 CU YD

16 5' - D I WATER MAIN 8"
TBF = 4 CU YD

17 263' - D I WATER MAIN 12"
TBF = 212 CU YD

18 14' - D I WATER MAIN 8"
TBF = 7 CU YD

19 5' - D I WATER MAIN 6"
TBF = 0 CU YD

20 36' - D I WATER MAIN 12"
TBF = 30 CU YD

21 23' - D I WATER MAIN 12"
TBF = 23 CU YD

22 12' - D I WATER MAIN 12"
TBF = 12 CU YD

23 78' - D I WATER MAIN 12"
TBF = 59 CU YD

24 67' - D I WATER MAIN 12"
TBF = 33 CU YD

25 5' - D I WATER MAIN 12"
TBF = 0 CU YD

26 136' - D I WATER MAIN 12"
TBF = 105 CU YD

4 APPX. BOTTOM SANITARY SEWER = 798.63
TOP PR WATER MAIN CASING = 797.13

5 APPX. BOTTOM STORM SEWER = 796.48
TOP PR WATER MAIN = 794.70

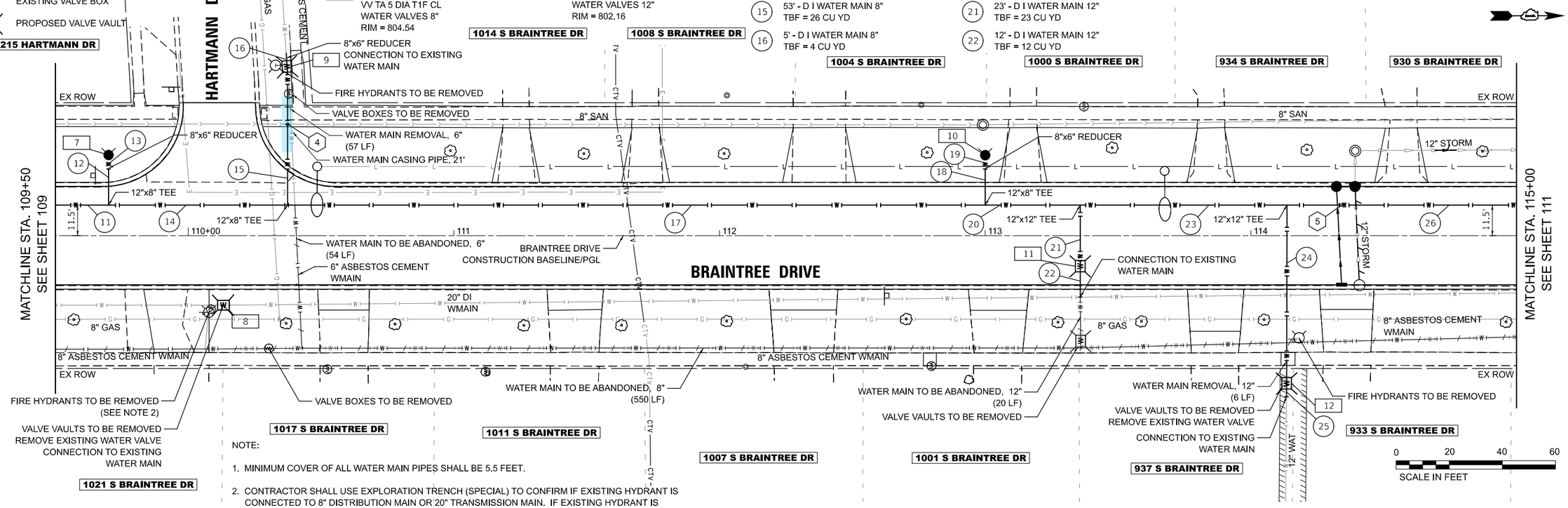

NOTE:

1. MINIMUM COVER OF ALL WATER MAIN PIPES SHALL BE 5.5 FEET.
2. CONTRACTOR SHALL USE EXPLORATION TRENCH (SPECIAL) TO CONFIRM IF EXISTING HYDRANT IS CONNECTED TO 8" DISTRIBUTION MAIN OR 20" TRANSMISSION MAIN. IF EXISTING HYDRANT IS CONNECTED TO DISTRIBUTION MAIN, LOCATION OF REPLACEMENT HYDRANT SHALL BE AS SHOWN ON PLANS. IF EXISTING HYDRANT IS CONNECTED TO TRANSMISSION MAIN, REPLACEMENT HYDRANT SHALL BE INSTALLED AT THE LOCATION OF EXISTING HYDRANT.

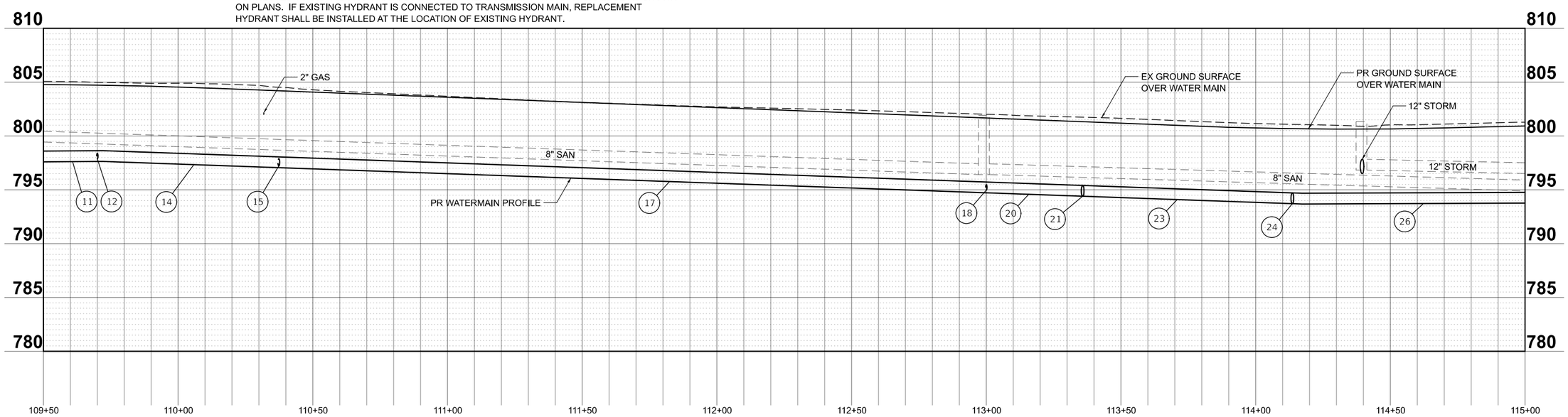

USER NAME = pk	DESIGNED - AMP	REVISED -	
	DRAWN - AMP	REVISED -	
	CHECKED - PK	REVISED -	
PLOT DATE = 1/7/2026	DATE - 01/07/2026	REVISED -	

STATE OF ILLINOIS
DEPARTMENT OF TRANSPORTATION

BRAINTREE DRIVE
WATER MAIN PLAN AND PROFILE

SCALE: 1"=20' | SHEET 3 OF 14 SHEETS | STA. 109+50.00 TO STA. 115+00.00

MUN RTE.	SECTION	COUNTY	TOTAL SHEETS	SHEET NO.
4029	23-00146-00-PV	COOK	315	110

CONTRACT NO. 61M26

ILLINOIS | FED. AID PROJECT

MODEL: Braintree - Sheet 3 [Sheet]
FILE NAME: c:\bms\dvltec\-pw\petro.kravets\d0140565\3993 Watermain.dgn

LEGEND

- WATER MAIN CASING PIPE
- WATER MAIN CASING JACKING SUGGESTED PIT LOCATION
- STEEL CASING PIPE, BORED AND JACKED
- EXISTING VALVE VAULT
- EXISTING VALVE BOX
- PROPOSED VALVE VAULT

13 STA 115+50.0, 11.5' LT
VV TA 6 DIA T1F CL
WATER VALVES 12"
RIM = 801.00

14 STA 116+70.0, 30.7' LT
FIRE HYD W/AUX V & VB

15 STA 117+92.8, 23.3' RT
VV TA 6 DIA T1F CL
WATER VALVES 20"
RIM = 800.28

16 STA 118+72.4, 23.6' RT
VV TA 6 DIA T1F CL
WATER VALVES 20"
RIM = 799.95

26 SEE SHEET 110

27 119' - D I WATER MAIN 12"
TBF = 96 CU YD

28 14' - D I WATER MAIN 8"
TBF = 7 CU YD

29 5' - D I WATER MAIN 6"
TBF = 0 CU YD

30 348' - D I WATER MAIN 12"
TBF = 274 CU YD

6 APPX. BOTTOM STORM SEWER = 795.49
TOP PR WATER MAIN = 793.77

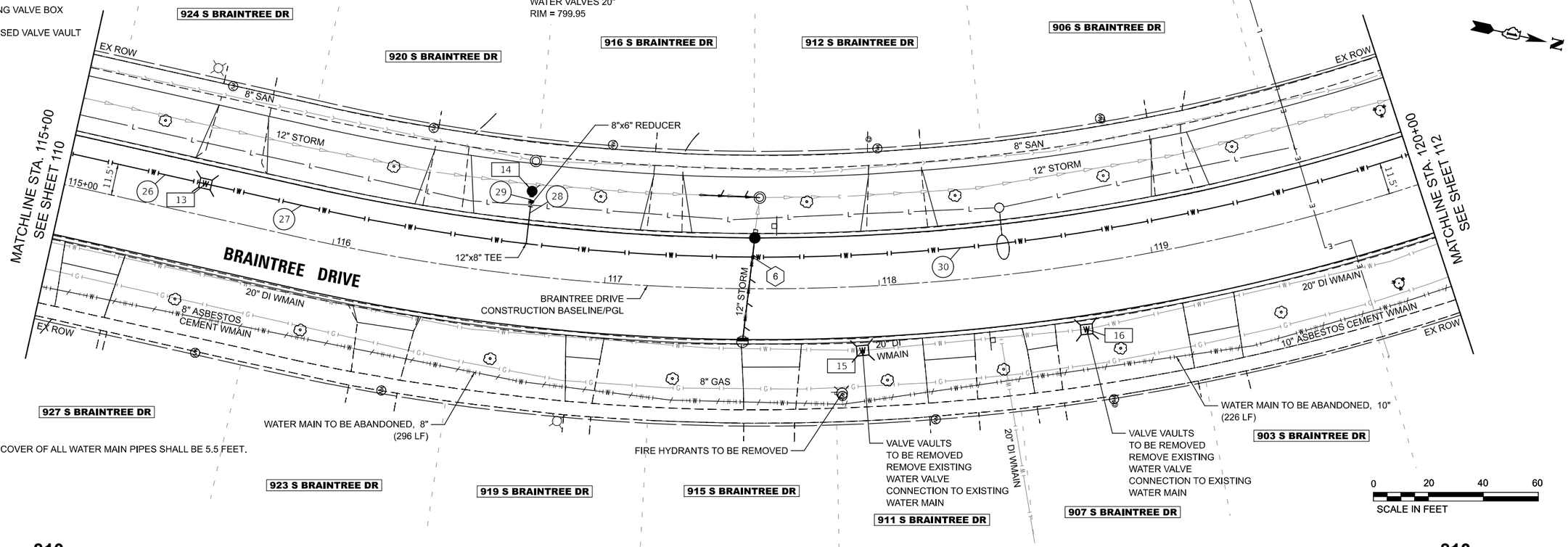

NOTE:

1. MINIMUM COVER OF ALL WATER MAIN PIPES SHALL BE 5.5 FEET.

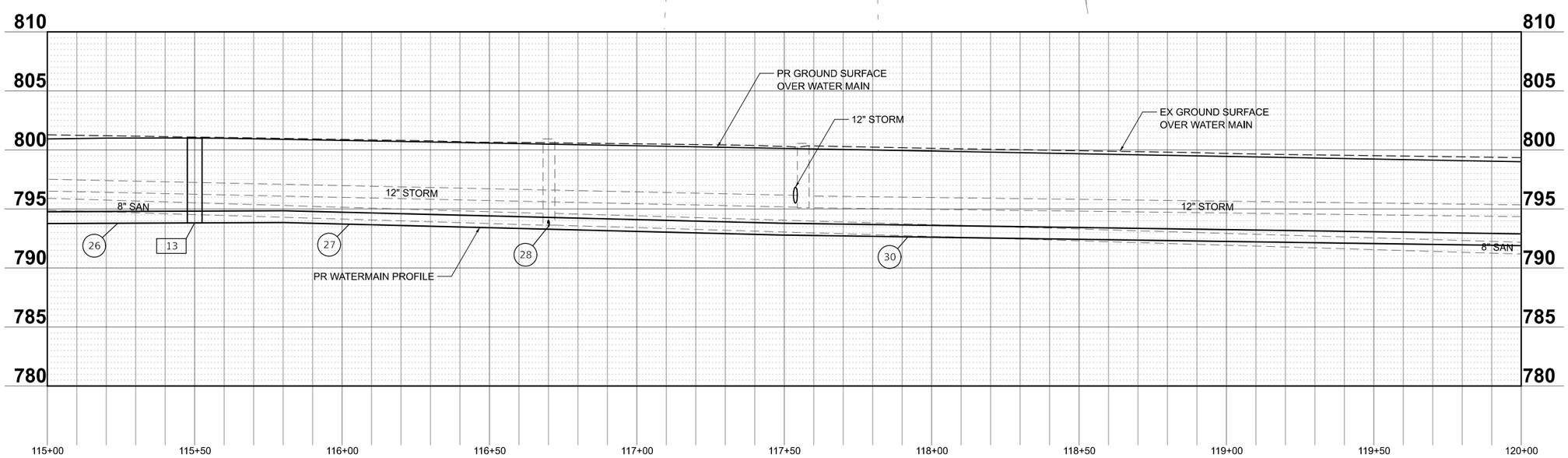

MODEL: Braintree - Sheet 4 [Sheet]
FILE NAME: c:\bms\dvltech-pw\petro.kravets\d0140565\3993 Watermain.dgn

USER NAME = pk	DESIGNED - AMP	REVISED -	
	DRAWN - AMP	REVISED -	
	CHECKED - PK	REVISED -	
PLOT DATE = 1/7/2026	DATE - 01/07/2026	REVISED -	

STATE OF ILLINOIS
DEPARTMENT OF TRANSPORTATION

BRAINTREE DRIVE
WATER MAIN PLAN AND PROFILE

SCALE:1"=20' | SHEET 4 OF 14 SHEETS | STA. 115+00.00 TO STA. 120+00.00

MUN RTE.	SECTION	COUNTY	TOTAL SHEETS	SHEET NO.
4029	23-00146-00-PV	COOK	315	111

CONTRACT NO. 61M26

ILLINOIS | FED. AID PROJECT

LEGEND

- WATER MAIN CASING PIPE
- WATER MAIN CASING JACKING SUGGESTED PIT LOCATION
- STEEL CASING PIPE, BORED AND JACKED
- EXISTING VALVE VAULT
- EXISTING VALVE BOX
- PROPOSED VALVE VAULT

17 STA 120+23.1, 26.7' LT
FIRE HYD W/AUX V & VB

18 STA 121+30.8, 25.4' RT
VV TA 6 DIA T1F CL
WATER VALVES 20"
RIM = 798.40

19 STA 121+32.3, 53.1' RT
VV TA 5 DIA T1F CL
WATER VALVES 8"
RIM = 798.80

20 STA 121+37.2, 55.2' LT
VV TA 5 DIA T1F CL
WATER VALVES 8"
RIM = 799.29

21 STA 123+48.0, 31.5' LT
FIRE HYD W/AUX V & VB

22 STA 124+01.8, 5.8' LT
VV TA 6 DIA T1F CL
WATER VALVES 12"
RIM = 800.52

30 SEE SHEET 111

31 10' - D I WATER MAIN 8"
TBF = 7 CU YD

32 5' - D I WATER MAIN 6"
TBF = 0 CU YD

33 140' - D I WATER MAIN 12"
TBF = 108 CU YD

34 55' - D I WATER MAIN 8"
TBF = 24 CU YD

35 5' - D I WATER MAIN 8"
TBF = 0 CU YD

36 47' - D I WATER MAIN 12"
TBF = 23 CU YD

37 18' - D I WATER MAIN 20"
TBF = 9 CU YD

38 32' - D I WATER MAIN 8"
TBF = 17 CU YD

39 5' - D I WATER MAIN 8"
TBF = 0 CU YD

40 184' - D I WATER MAIN 12"
TBF = 148 CU YD

41 24' - D I WATER MAIN 8"
TBF = 11 CU YD

42 2' - D I WATER MAIN 6"
TBF = 0 CU YD

43 55' - D I WATER MAIN 12"
TBF = 49 CU YD

44 145' - D I WATER MAIN 12"
TBF = 133 CU YD

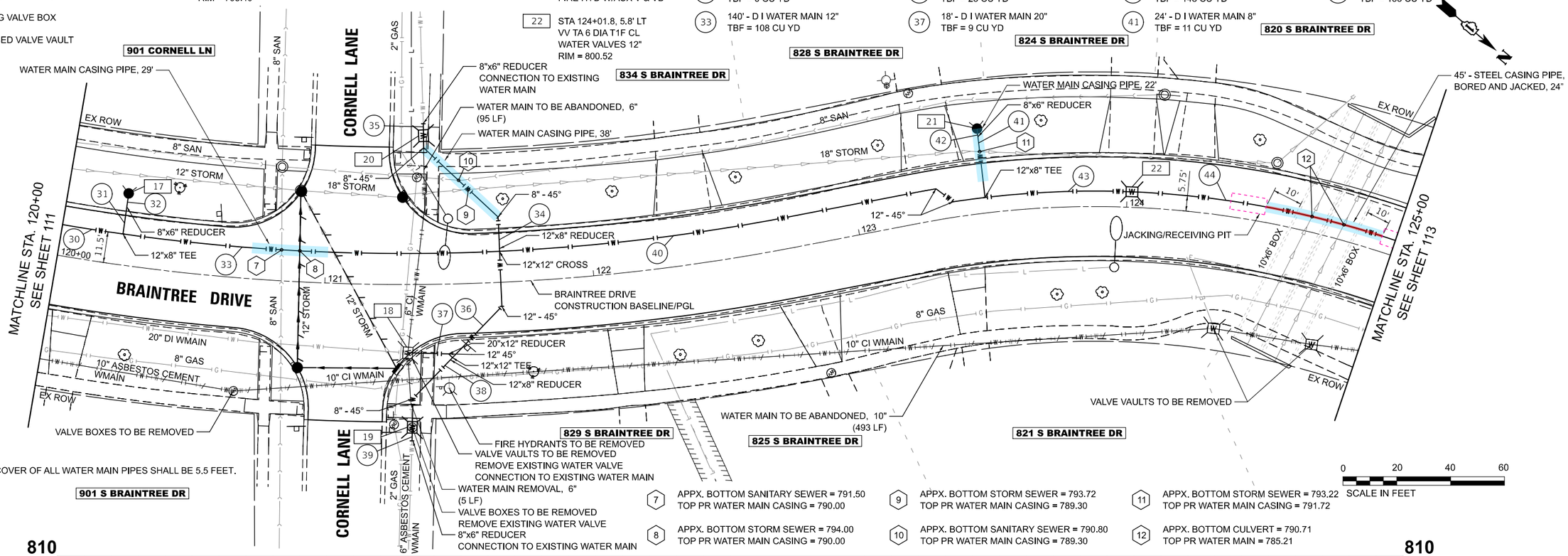

NOTE:

1. MINIMUM COVER OF ALL WATER MAIN PIPES SHALL BE 5.5 FEET.

7 APPX. BOTTOM SANITARY SEWER = 791.50
TOP PR WATER MAIN CASING = 790.00

8 APPX. BOTTOM STORM SEWER = 794.00
TOP PR WATER MAIN CASING = 790.00

9 APPX. BOTTOM STORM SEWER = 793.72
TOP PR WATER MAIN CASING = 789.30

10 APPX. BOTTOM SANITARY SEWER = 790.80
TOP PR WATER MAIN CASING = 789.30

11 APPX. BOTTOM STORM SEWER = 793.22
TOP PR WATER MAIN CASING = 791.72

12 APPX. BOTTOM CULVERT = 790.71
TOP PR WATER MAIN = 785.21

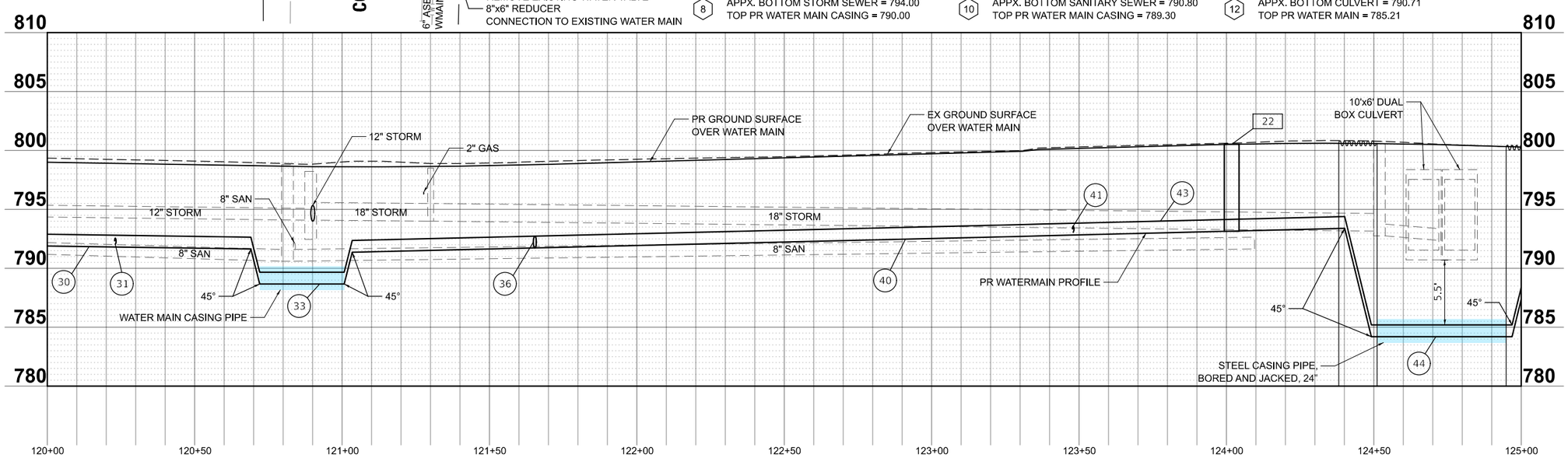

MODEL: Braintree - Sheet 5 [Sheet]
FILE NAME: c:\bms\dvltech-pw\petro.kravets\d0140565\3993 Watermain.dgn

USER NAME = pk	DESIGNED - AMP	REVISED -	
	DRAWN - AMP	REVISED -	
	CHECKED - PK	REVISED -	
PLOT DATE = 1/7/2026	DATE - 01/07/2026	REVISED -	

STATE OF ILLINOIS
DEPARTMENT OF TRANSPORTATION

BRAINTREE DRIVE
WATER MAIN PLAN AND PROFILE

SCALE: 1"=20' | SHEET 5 OF 14 SHEETS | STA. 120+00.00 TO STA. 125+00.00

MUN RTE.	SECTION	COUNTY	TOTAL SHEETS	SHEET NO.
4029	23-00146-00-PV	COOK	315	112

CONTRACT NO. 61M26

ILLINOIS | FED. AID PROJECT

LEGEND

- WATER MAIN CASING PIPE
- WATER MAIN CASING JACKING SUGGESTED PIT LOCATION
- STEEL CASING PIPE, BORED AND JACKED
- EXISTING VALVE VAULT
- EXISTING VALVE BOX
- PROPOSED VALVE VAULT

NSMJAWA NOTES:

1. PRIOR TO THE START OF WORK, CONTACT NSMJAWA WATCH & PROTECT AT 773.686.0077 AT LEAST 48 HOURS IN ADVANCE FOR INSPECTION. THE UTILITY PAD WILL BE INSTALLED PER THE DETAIL, AND VIBRATION MONITORING, AS REQUESTED, WILL BE IN PLACE PRIOR TO MOVEMENT OF ANY HEAVY MACHINERY NEAR THE DUAL 30" HIGH-PRESSURE PCCP WATERMAINS.

44	SEE SHEET 112
45	81' - D I WATER MAIN 12" TBF = 69 CU YD
46	44' - D I WATER MAIN 8" TBF = 20 CU YD
47	10' - D I WATER MAIN 8" TBF = 7 CU YD
48	67' - D I WATER MAIN 12" TBF = 53 CU YD
49	12' - D I WATER MAIN 8" TBF = 7 CU YD
50	5' - D I WATER MAIN 6" TBF = 0 CU YD
51	47' - D I WATER MAIN 12" TBF = 69 CU YD
52	202' - D I WATER MAIN 12" TBF = 147 CU YD

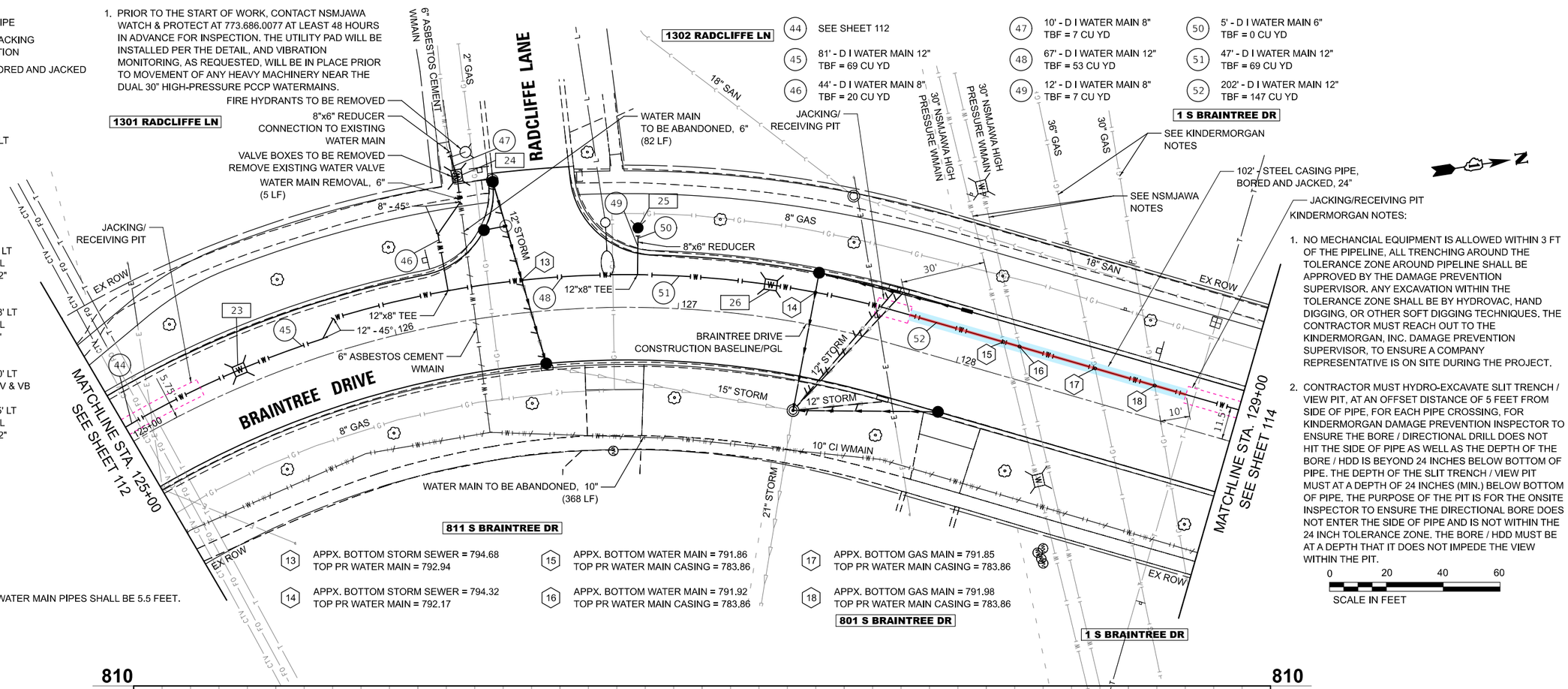

23	STA 125+44.3, 5.8' LT VV TA 6 DIA T1F CL WATER VALVES 12" RIM = 799.96
24	STA 126+29.7, 50.8' LT VV TA 5 DIA T1F CL WATER VALVES 8" RIM = 799.55
25	STA 126+85.6, 28.0' LT FIRE HYD W/AUX V & VB
26	STA 127+31.1, 11.5' LT VV TA 6 DIA T1F CL WATER VALVES 12" RIM = 798.49

13	APPX. BOTTOM STORM SEWER = 794.68 TOP PR WATER MAIN = 792.94
14	APPX. BOTTOM STORM SEWER = 794.32 TOP PR WATER MAIN = 792.17
15	APPX. BOTTOM WATER MAIN = 791.86 TOP PR WATER MAIN CASING = 783.86
16	APPX. BOTTOM WATER MAIN = 791.92 TOP PR WATER MAIN CASING = 783.86
17	APPX. BOTTOM GAS MAIN = 791.85 TOP PR WATER MAIN CASING = 783.86
18	APPX. BOTTOM GAS MAIN = 791.98 TOP PR WATER MAIN CASING = 783.86

NOTE:

1. MINIMUM COVER OF ALL WATER MAIN PIPES SHALL BE 5.5 FEET.

JACKING/RECEIVING PIT KINDERMORGAN NOTES:

1. NO MECHANCIAL EQUIPMENT IS ALLOWED WITHIN 3 FT OF THE PIPELINE, ALL TRENCHING AROUND THE TOLERANCE ZONE AROUND PIPELINE SHALL BE APPROVED BY THE DAMAGE PREVENTION SUPERVISOR. ANY EXCAVATION WITHIN THE TOLERANCE ZONE SHALL BE BY HYDROVAC, HAND DIGGING, OR OTHER SOFT DIGGING TECHNIQUES. THE CONTRACTOR MUST REACH OUT TO THE KINDERMORGAN, INC. DAMAGE PREVENTION SUPERVISOR, TO ENSURE A COMPANY REPRESENTATIVE IS ON SITE DURING THE PROJECT.
2. CONTRACTOR MUST HYDRO-EXCAVATE SLIT TRENCH / VIEW PIT, AT AN OFFSET DISTANCE OF 5 FEET FROM SIDE OF PIPE, FOR EACH PIPE CROSSING, FOR KINDERMORGAN DAMAGE PREVENTION INSPECTOR TO ENSURE THE BORE / DIRECTIONAL DRILL DOES NOT HIT THE SIDE OF PIPE AS WELL AS THE DEPTH OF THE BORE / HDD IS BEYOND 24 INCHES BELOW BOTTOM OF PIPE. THE DEPTH OF THE SLIT TRENCH / VIEW PIT MUST AT A DEPTH OF 24 INCHES (MIN.) BELOW BOTTOM OF PIPE. THE PURPOSE OF THE PIT IS FOR THE ONSITE INSPECTOR TO ENSURE THE DIRECTIONAL BORE DOES NOT ENTER THE SIDE OF PIPE AND IS NOT WITHIN THE 24 INCH TOLERANCE ZONE. THE BORE / HDD MUST BE AT A DEPTH THAT IT DOES NOT IMPEDE THE VIEW WITHIN THE PIT.

0 20 40 60
SCALE IN FEET

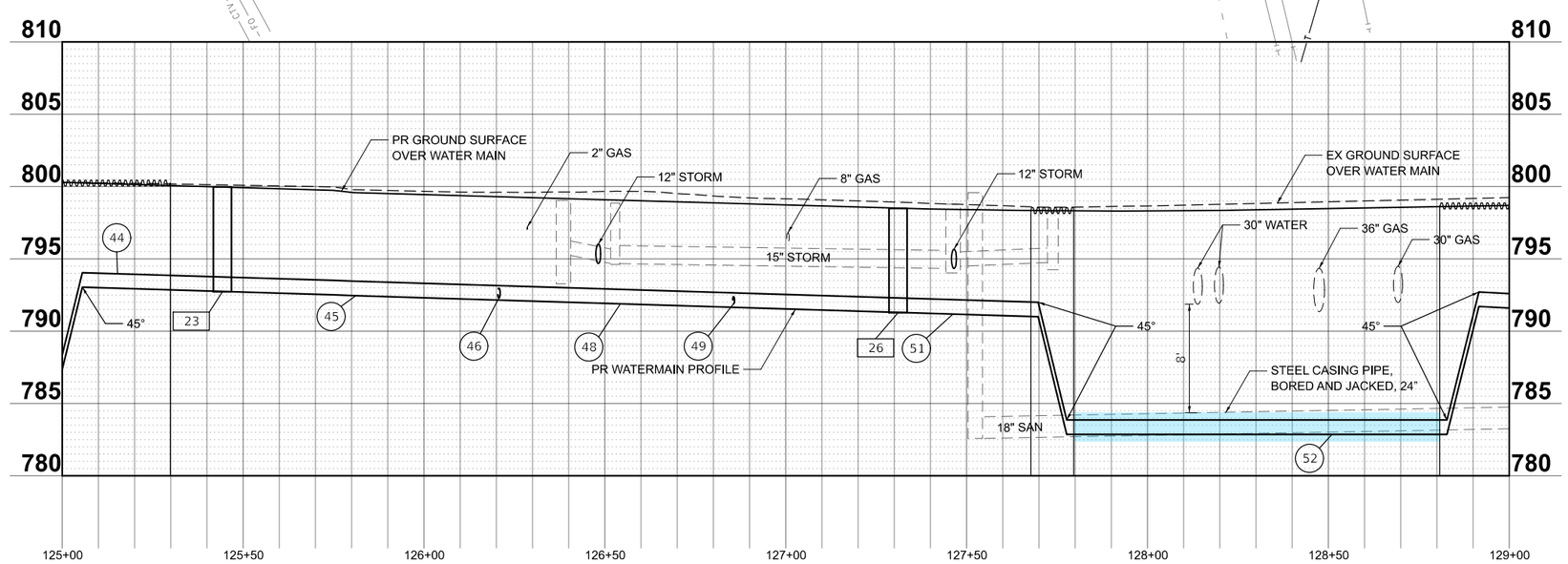

MODEL: Braintree - Sheet 6 [Sheet]
FILE NAME: c:\bms\dvlltech-pw\petro.kravets\d0140565\3993 Watermain.dgn

USER NAME = pk	DESIGNED - AMP	REVISED -	
	DRAWN - AMP	REVISED -	
	CHECKED - PK	REVISED -	
PLOT DATE = 1/7/2026	DATE - 01/07/2026	REVISED -	

STATE OF ILLINOIS
DEPARTMENT OF TRANSPORTATION

BRAINTREE DRIVE
WATER MAIN PLAN AND PROFILE

SCALE: 1"=20' | SHEET 6 OF 14 SHEETS | STA. 125+00.00 TO STA. 129+00.00

MUN RTE.	SECTION	COUNTY	TOTAL SHEETS	SHEET NO.
4029	23-00146-00-PV	COOK	315	113

CONTRACT NO. 61M26

ILLINOIS | FED. AID PROJECT

LEGEND

- WATER MAIN CASING PIPE
- WATER MAIN CASING JACKING SUGGESTED PIT LOCATION
- STEEL CASING PIPE, BORED AND JACKED
- EXISTING VALVE VAULT
- EXISTING VALVE BOX
- PROPOSED VALVE VAULT

27 STA 129+30.8, 11.5' LT
VV TA 6 DIA T1F CL
WATER VALVES 12"
RIM = 798.83

28 STA 130+04.8, 52.4' LT
VV TA 5 DIA T1F CL
WATER VALVES 8"
RIM = 799.61

29 STA 130+58.0, 29.3' LT
FIRE HYD W/AUX V & VB

30 STA 132+36.7, 57.1' RT
VV TA 5 DIA T1F CL
WATER VALVES 10"
RIM = 800.63

52 SEE SHEET 113

53 69' - D I WATER MAIN 12"
TBF = 73 CU YD

54 43' - D I WATER MAIN 8"
TBF = 28 CU YD

55 5' - D I WATER MAIN 8"
TBF = 0 CU YD

56 59' - D I WATER MAIN 12"
TBF = 49 CU YD

57 13' - D I WATER MAIN 8"
TBF = 7 CU YD

58 5' - D I WATER MAIN 6"
TBF = 0 CU YD

59 199' - D I WATER MAIN 12"
TBF = 161 CU YD

60 77' - D I WATER MAIN 10"
TBF = 31 CU YD

61 5' - D I WATER MAIN 10"
TBF = 0 CU YD

62 183' - D I WATER MAIN 12"
TBF = 154 CU YD

19 APPX. BOTTOM STORM SEWER = 793.74
TOP PR WATER MAIN CASING = 792.24

20 APPX. BOTTOM STORM SEWER = 794.17
TOP PR WATER MAIN = 792.57

21 BOTTOM PR WATER MAIN = 792.99
APPX. TOP SANITARY SEWER = 784.99

22 APPX. BOTTOM STORM SEWER = 795.65
TOP PR WATER MAIN = 793.96

23 BOTTOM PR WATER MAIN = 792.78
APPX. TOP SANITARY SEWER = 786.52

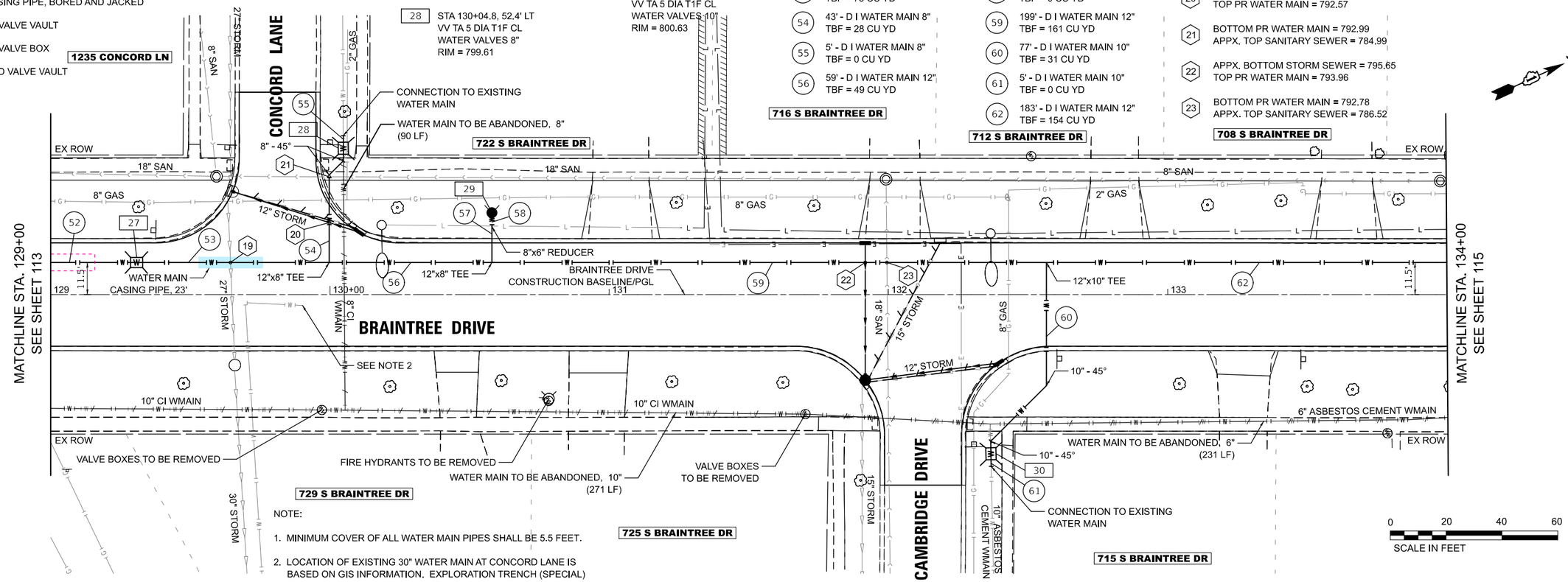

NOTE:

1. MINIMUM COVER OF ALL WATER MAIN PIPES SHALL BE 5.5 FEET.
2. LOCATION OF EXISTING 30" WATER MAIN AT CONCORD LANE IS BASED ON GIS INFORMATION. EXPLORATION TRENCH (SPECIAL) SHALL BE USED AT THE DIRECTION OF ENGINEER TO CONFIRM PRESENSE AND THE EXACT LOCATION OF THE MAIN.

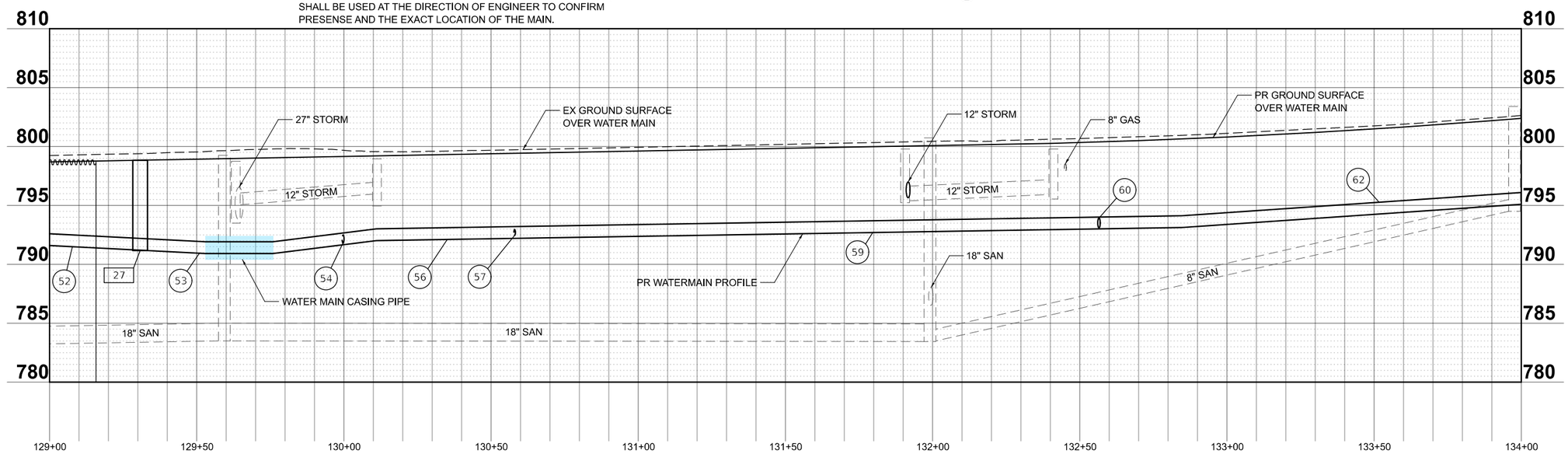

USER NAME = pk	DESIGNED - AMP	REVISED -
	DRAWN - AMP	REVISED -
	CHECKED - PK	REVISED -
PLOT DATE = 1/7/2026	DATE - 01/07/2026	REVISED -

STATE OF ILLINOIS
DEPARTMENT OF TRANSPORTATION

BRAINTREE DRIVE
WATER MAIN PLAN AND PROFILE

SCALE: 1"=20' | SHEET 7 OF 14 SHEETS | STA. 129+00.00 TO STA. 134+00.00

MUN RTE.	SECTION	COUNTY	TOTAL SHEETS	SHEET NO.
4029	23-00146-00-PV	COOK	315	114

CONTRACT NO. 61M26

ILLINOIS | FED. AID PROJECT

MODEL: Braintree - Sheet 7 [Sheet]
FILE NAME: c:\bms\civiltech-pw\petro.kravets\d0140565\3993 Watermain.dgn

LEGEND

- WATER MAIN CASING PIPE
- WATER MAIN CASING JACKING SUGGESTED PIT LOCATION
- STEEL CASING PIPE, BORED AND JACKED
- EXISTING VALVE VAULT
- EXISTING VALVE BOX
- PROPOSED VALVE VAULT

31 STA 134+40.7, 31.4' LT
FIRE HYD W/AUX V & VB

32 STA 137+19.8, 31.2' LT
FIRE HYD W/AUX V & VB

33 STA 138+00.0, 11.5' LT
VV TA 6 DIA T1F CL
WATER VALVES 12"
RIM = 803.09

62 SEE SHEET 114

63 15' - D I WATER MAIN 8"
TBF = 7 CU YD

64 5' - D I WATER MAIN 6"
TBF = 0 CU YD

65 275' - D I WATER MAIN 12"
TBF = 232 CU YD

66 15' - D I WATER MAIN 8"
TBF = 7 CU YD

67 5' - D I WATER MAIN 6"
TBF = 0 CU YD

68 80' - D I WATER MAIN 12"
TBF = 65 CU YD

69 225' - D I WATER MAIN 12"
TBF = 169 CU YD

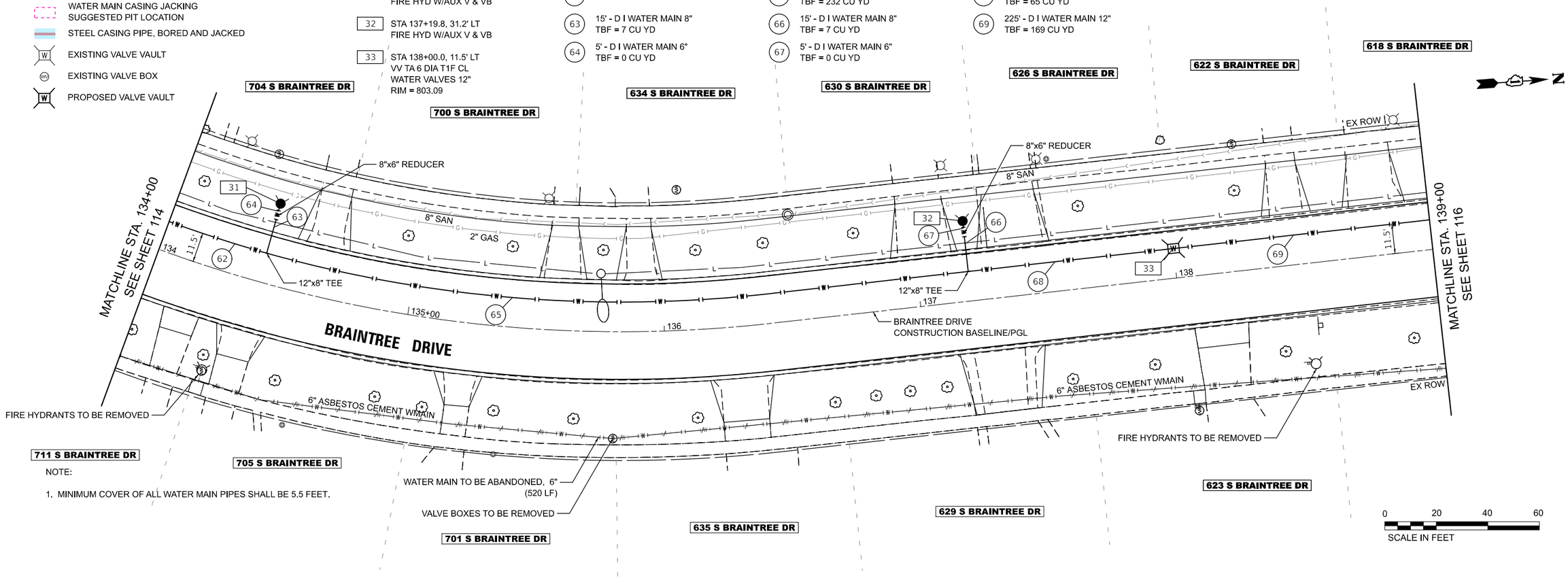

NOTE:

1. MINIMUM COVER OF ALL WATER MAIN PIPES SHALL BE 5.5 FEET.

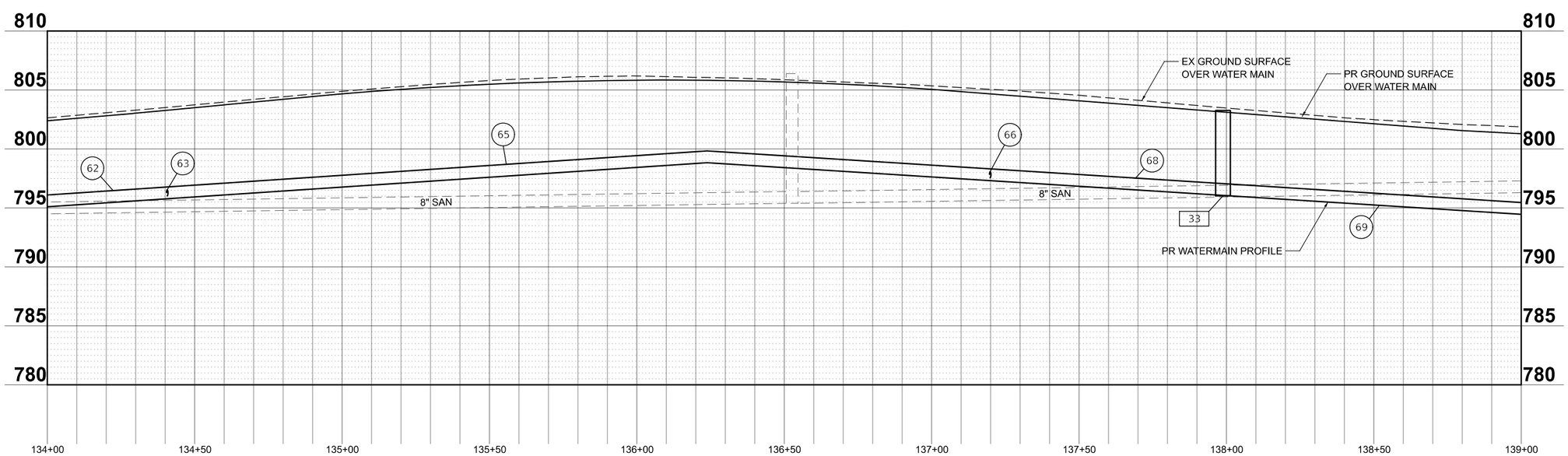

MODEL: Braintree - Sheet 8 [Sheet]
FILE NAME: c:\bms\k\illtech-pw\petro.kravets\d0140565\3993 Watermain.dgn

USER NAME = pk	DESIGNED - AMP	REVISED -	
	DRAWN - AMP	REVISED -	
	CHECKED - PK	REVISED -	
PLOT DATE = 1/7/2026	DATE - 01/07/2026	REVISED -	

STATE OF ILLINOIS
DEPARTMENT OF TRANSPORTATION

BRAINTREE DRIVE
WATER MAIN PLAN AND PROFILE

SCALE: 1"=20' | SHEET 8 OF 14 SHEETS | STA. 134+00.00 TO STA. 139+00.00

MUN RTE.	SECTION	COUNTY	TOTAL SHEETS	SHEET NO.
4029	23-00146-00-PV	COOK	315	115

CONTRACT NO. 61M26

ILLINOIS | FED. AID PROJECT

LEGEND

- WATER MAIN CASING PIPE
- WATER MAIN CASING JACKING SUGGESTED PIT LOCATION
- STEEL CASING PIPE, BORED AND JACKED
- EXISTING VALVE VAULT
- EXISTING VALVE BOX
- PROPOSED VALVE VAULT

34 STA 140+27.7, 31.4' LT
FIRE HYD W/AUX V & VB

35 STA 142+76.5, 28.7' LT
FIRE HYD W/AUX V & VB

36 STA 143+23.9, 48.7' LT
VV TA 5 DIA T1F CL
WATER VALVES 8"
RIM = 802.32

69 SEE SHEET 115

70 15' - D I WATER MAIN 8"
TBF = 7 CU YD

71 5' - D I WATER MAIN 6"
TBF = 0 CU YD

72 258' - D I WATER MAIN 12"
TBF = 203 CU YD

73 5' - D I WATER MAIN 6"
TBF = 0 CU YD

74 65' - D I WATER MAIN 12"
TBF = 51 CU YD

75 17' - D I WATER MAIN 8"
TBF = 10 CU YD

76 5' - D I WATER MAIN 8"
TBF = 0 CU YD

77 186' - D I WATER MAIN 12"
TBF = 181 CU YD

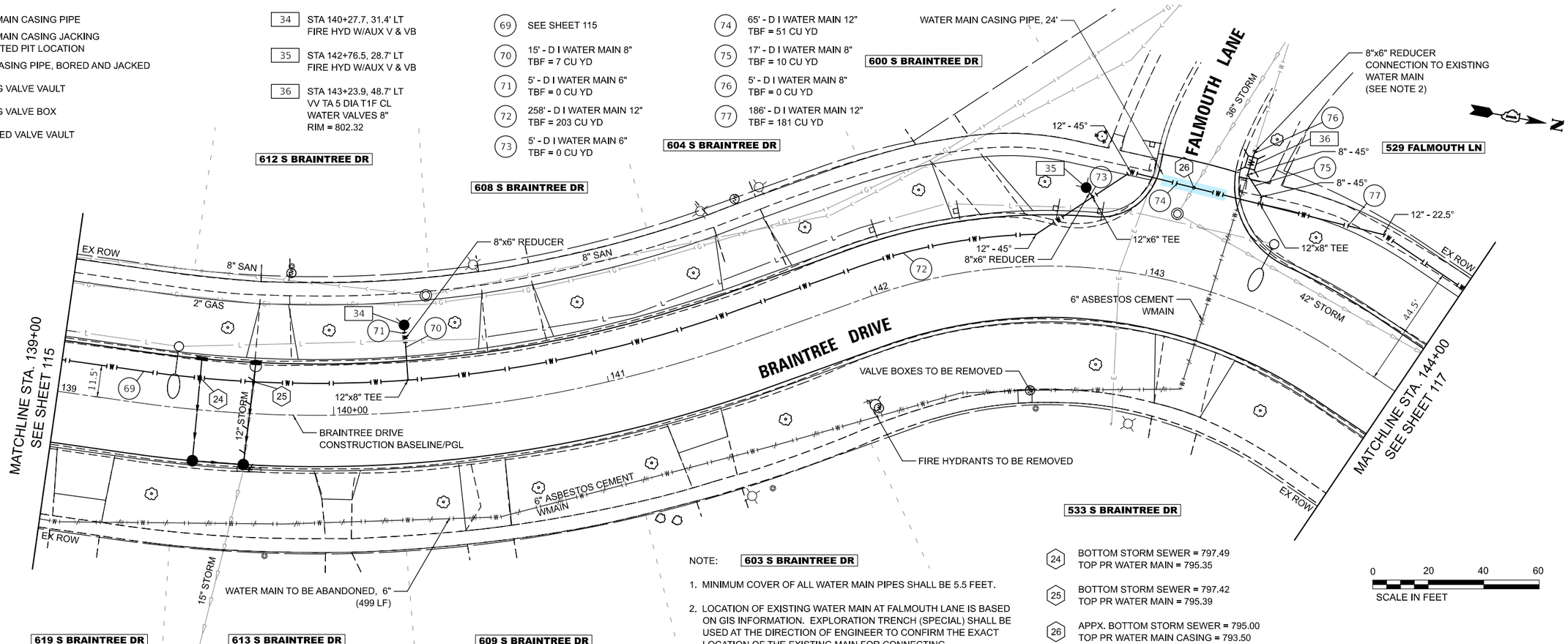

NOTE: **603 S BRAINTREE DR**

1. MINIMUM COVER OF ALL WATER MAIN PIPES SHALL BE 5.5 FEET.
2. LOCATION OF EXISTING WATER MAIN AT FALMOUTH LANE IS BASED ON GIS INFORMATION. EXPLORATION TRENCH (SPECIAL) SHALL BE USED AT THE DIRECTION OF ENGINEER TO CONFIRM THE EXACT LOCATION OF THE EXISTING MAIN FOR CONNECTING.

24 BOTTOM STORM SEWER = 797.49
TOP PR WATER MAIN = 795.35

25 BOTTOM STORM SEWER = 797.42
TOP PR WATER MAIN = 795.39

26 APPX. BOTTOM STORM SEWER = 795.00
TOP PR WATER MAIN CASING = 793.50

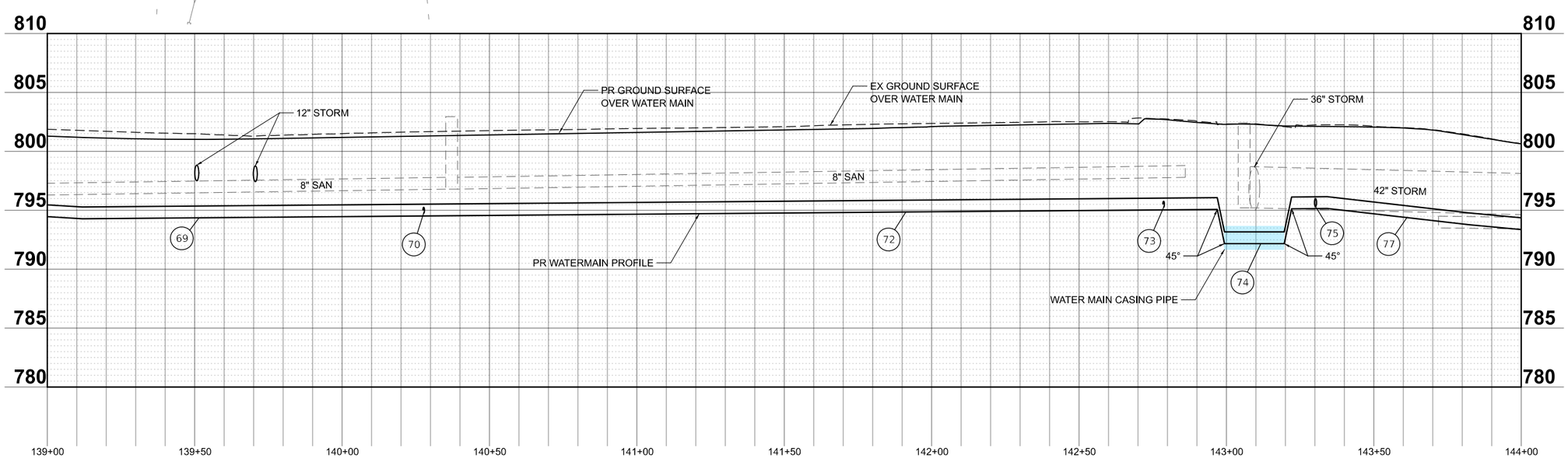

MODEL: Braintree - Sheet 9 [Sheet]
FILE NAME: c:\bms\dvltech-pw\petro.kravets\d0140565\3993 Watermain.dgn

USER NAME = pk	DESIGNED - AMP	REVISED -	
	DRAWN - AMP	REVISED -	
	CHECKED - PK	REVISED -	
PLOT DATE = 1/7/2026	DATE - 01/07/2026	REVISED -	

STATE OF ILLINOIS
DEPARTMENT OF TRANSPORTATION

BRAINTREE DRIVE
WATER MAIN PLAN AND PROFILE

SCALE: 1"=20' | SHEET 9 OF 14 SHEETS | STA. 139+00.00 TO STA. 144+00.00

MUN RTE.	SECTION	COUNTY	TOTAL SHEETS	SHEET NO.
4029	23-00146-00-PV	COOK	315	116

CONTRACT NO. 61M26

ILLINOIS | FED. AID PROJECT

LEGEND

- WATER MAIN CASING PIPE
- WATER MAIN CASING JACKING SUGGESTED PIT LOCATION
- STEEL CASING PIPE, BORED AND JACKED
- EXISTING VALVE VAULT
- EXISTING VALVE BOX
- PROPOSED VALVE VAULT

37 STA 145+05.0, 44.5' LT
VV TA 6 DIA T1F CL
WATER VALVES 12"
RIM = 798.16

38 STA 146+53.0, 36.0' LT
FIRE HYD W/AUX V & VB

39 STA 147+31.3, 37.6' LT
VV TA 5 DIA T1F CL
WATER VALVES 10"
RIM = 806.31

77 SEE SHEET 116

78 148' - D I WATER MAIN 12"
TBF = 158 CU YD

79 4' - D I WATER MAIN 8"
TBF = 7 CU YD

80 5' - D I WATER MAIN 6"
TBF = 0 CU YD

81 74' - D I WATER MAIN 12"
TBF = 85 CU YD

82 7' - D I WATER MAIN 10"
TBF = 6 CU YD

83 129' - D I WATER MAIN 10"
TBF = 80 CU YD

84 232' - D I WATER MAIN 12"
TBF = 256 CU YD

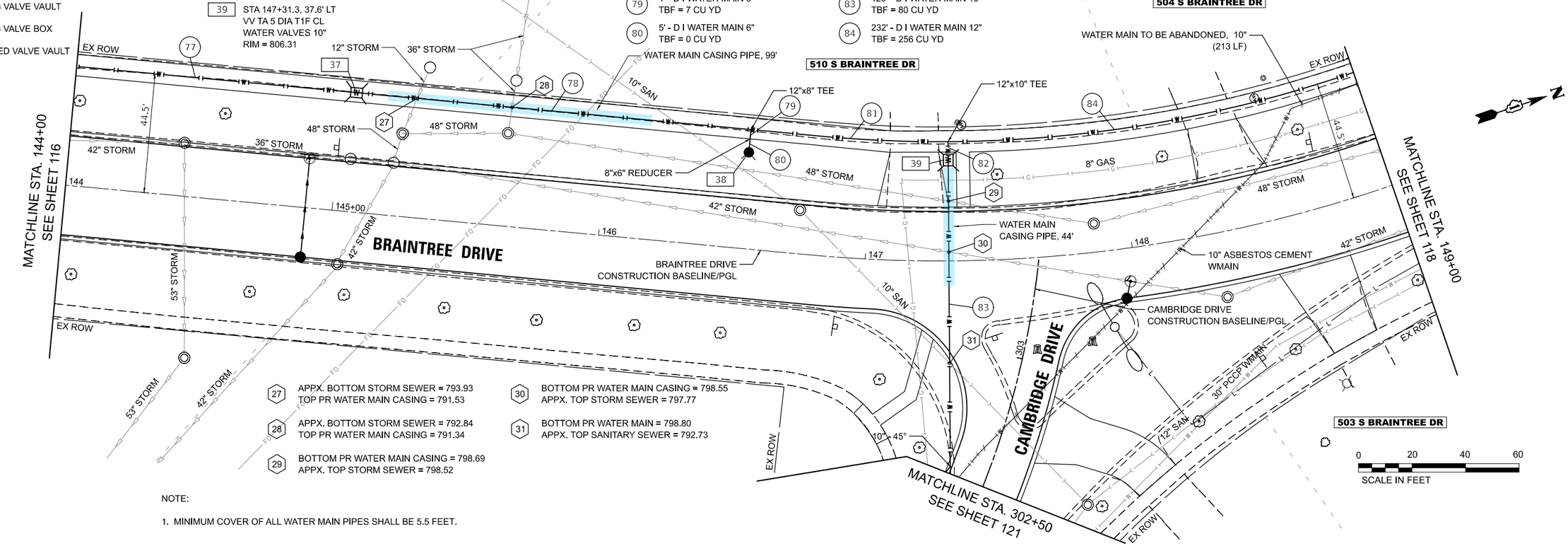

27 APPX. BOTTOM STORM SEWER = 793.93
TOP PR WATER MAIN CASING = 791.53

28 APPX. BOTTOM STORM SEWER = 792.84
TOP PR WATER MAIN CASING = 791.34

29 BOTTOM PR WATER MAIN CASING = 798.69
APPX. TOP STORM SEWER = 798.52

30 BOTTOM PR WATER MAIN CASING = 798.55
APPX. TOP STORM SEWER = 797.77

31 BOTTOM PR WATER MAIN = 798.80
APPX. TOP SANITARY SEWER = 792.73

NOTE:

1. MINIMUM COVER OF ALL WATER MAIN PIPES SHALL BE 5.5 FEET.

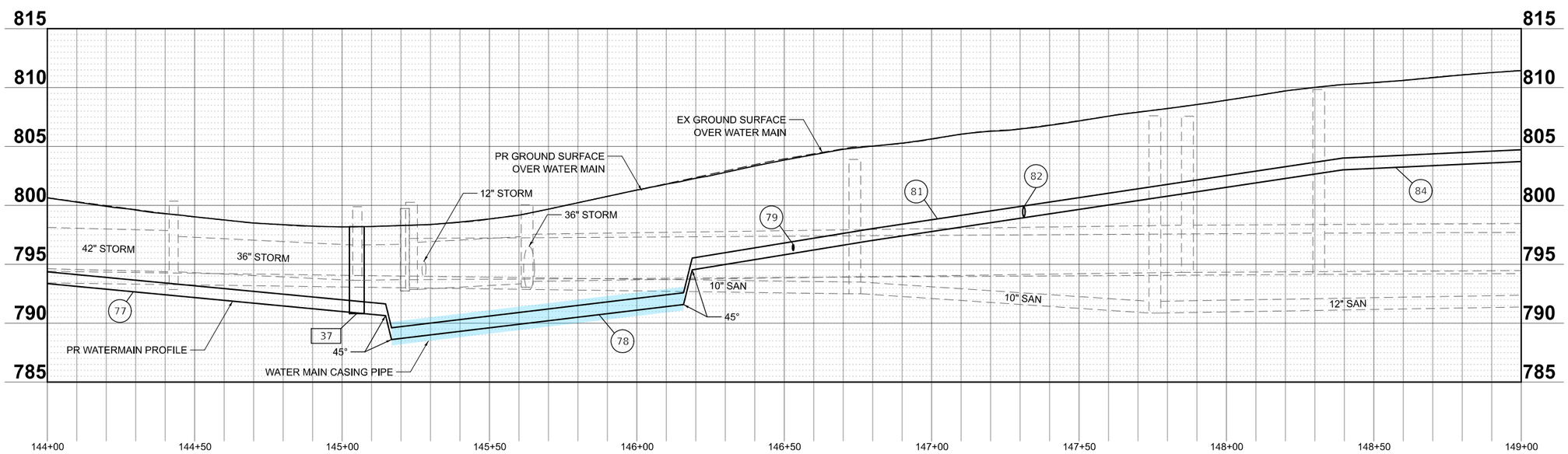

MODEL: Braintree - Sheet 10 [Sheet]
FILE NAME: c:\bmsdv8\tech-pw\petro.kravets\d0140565\3993 Watermain.dgn

USER NAME = pk	DESIGNED - AMP	REVISED -	
	DRAWN - AMP	REVISED -	
	CHECKED - PK	REVISED -	
PLOT DATE = 1/7/2026	DATE - 01/07/2026	REVISED -	

STATE OF ILLINOIS
DEPARTMENT OF TRANSPORTATION

BRAINTREE DRIVE
WATER MAIN PLAN AND PROFILE

SCALE: 1"=20' | SHEET 10 OF 14 SHEETS | STA. 144+00.00 TO STA. 149+00.00

MUN RTE.	SECTION	COUNTY	TOTAL SHEETS	SHEET NO.
4029	23-00146-00-PV	COOK	315	117

CONTRACT NO. 61M26

ILLINOIS | FED. AID PROJECT

LEGEND

- WATER MAIN CASING PIPE
- WATER MAIN CASING JACKING SUGGESTED PIT LOCATION
- STEEL CASING PIPE, BORED AND JACKED
- EXISTING VALVE VAULT
- EXISTING VALVE BOX
- PROPOSED VALVE VAULT

40 STA 149+77.0, 35.1' LT
FIRE HYD W/AUX V & VB

41 STA 152+19.7, 63.5' LT
VV TA 5 DIA T1F CL
WATER VALVES 8"
RIM = 807.20

42 STA 152+64.1, 22.2' LT
VV TA 6 DIA T1F CL
WATER VALVES 30"
RIM = 806.11

43 STA 152+45.7, 44.5' LT
VV TA 6 DIA T1F CL
WATER VALVES 12"
RIM = 806.87

44 STA 153+23.1, 29.3' LT
FIRE HYD W/AUX V & VB

45 STA 153+75.24, 22.2' LT
VV TA 6 DIA T1F CL
WATER VALVES 12"
RIM = 803.21

84 SEE SHEET 117

85 4' - D I WATER MAIN 8"
TBF = 7 CU YD

86 5' - D I WATER MAIN 6"
TBF = 0 CU YD

87 261' - D I WATER MAIN 12"
TBF = 253 CU YD

88 24' - D I WATER MAIN 8"
TBF = 7 CU YD

89 5' - D I WATER MAIN 8"
TBF = 0 CU YD

90 18' - D I WATER MAIN 12"
TBF = 19 CU YD

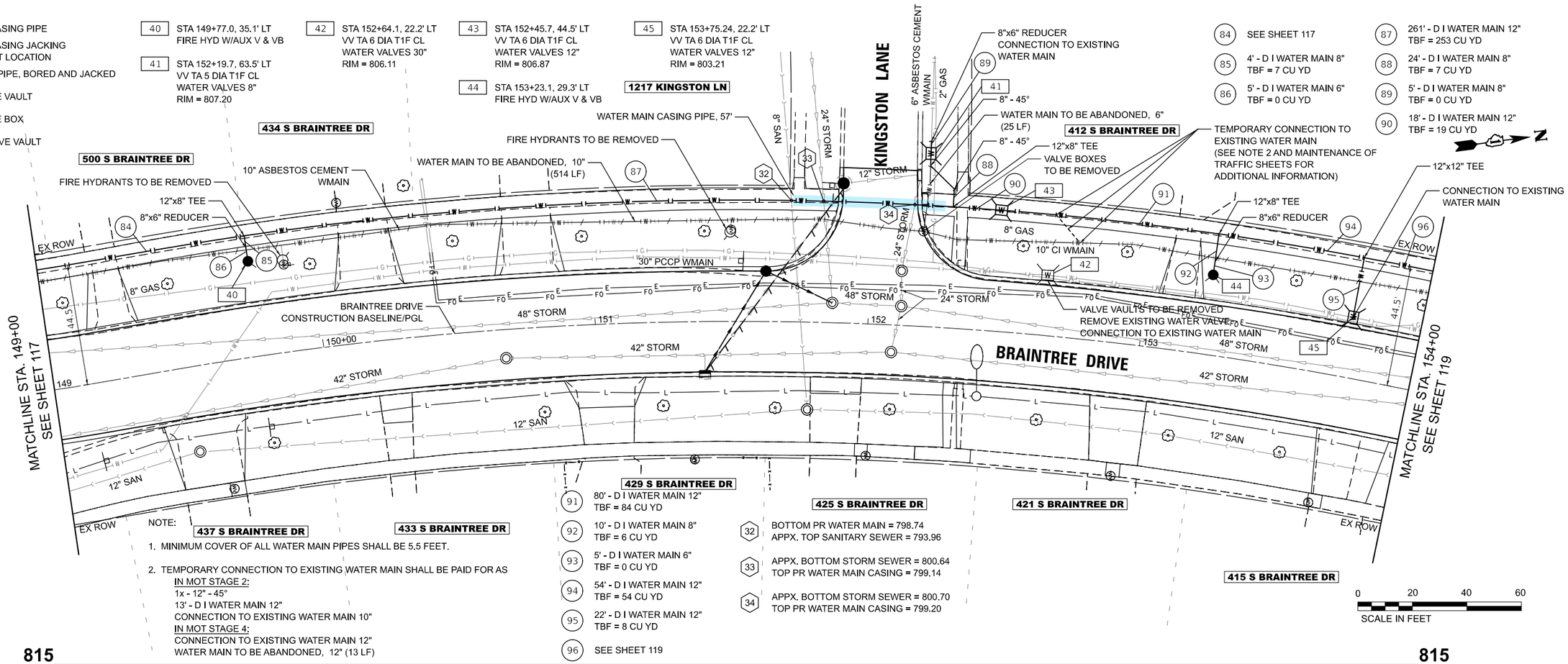

NOTE:

1. MINIMUM COVER OF ALL WATER MAIN PIPES SHALL BE 5.5 FEET.
2. TEMPORARY CONNECTION TO EXISTING WATER MAIN SHALL BE PAID FOR AS
   IN MOT STAGE 2:
   1x - 12" - 45°
   13' - D I WATER MAIN 12"
   CONNECTION TO EXISTING WATER MAIN 10"
   IN MOT STAGE 4:
   CONNECTION TO EXISTING WATER MAIN 12"
   WATER MAIN TO BE ABANDONED, 12" (13 LF)

91 80' - D I WATER MAIN 12"
TBF = 84 CU YD

92 10' - D I WATER MAIN 8"
TBF = 6 CU YD

93 5' - D I WATER MAIN 6"
TBF = 0 CU YD

94 54' - D I WATER MAIN 12"
TBF = 54 CU YD

95 22' - D I WATER MAIN 12"
TBF = 8 CU YD

96 SEE SHEET 119

32 BOTTOM PR WATER MAIN = 798.74
APPX. TOP SANITARY SEWER = 793.96

33 APPX. BOTTOM STORM SEWER = 800.64
TOP PR WATER MAIN CASING = 799.14

34 APPX. BOTTOM STORM SEWER = 800.70
TOP PR WATER MAIN CASING = 799.20

0 20 40 60
SCALE IN FEET

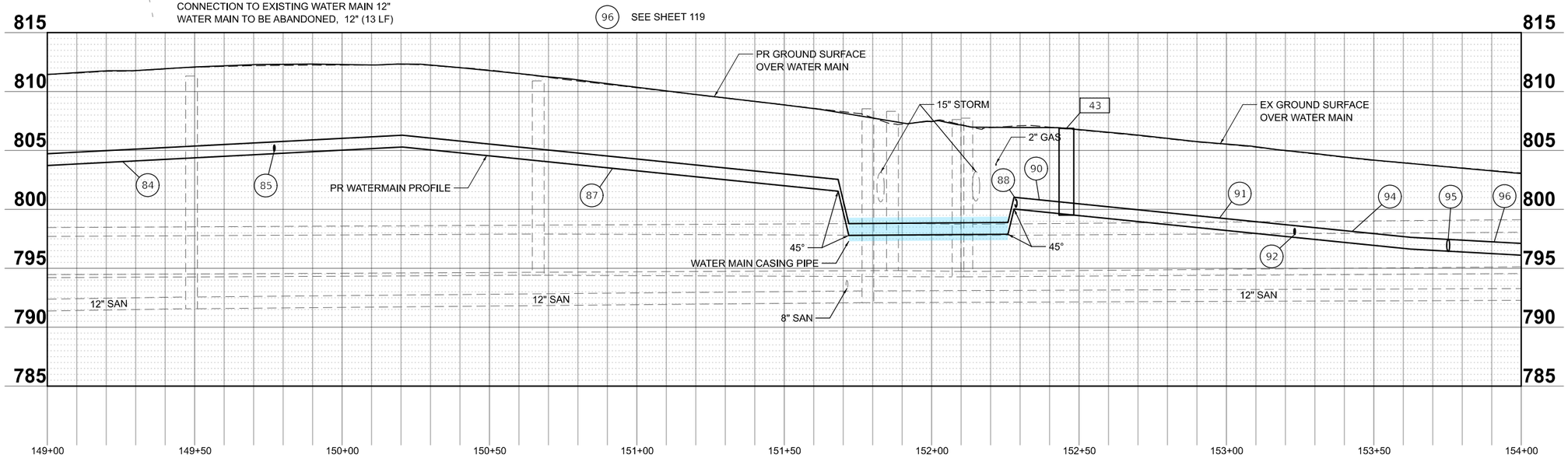

MODEL: Braintree - Sheet 11 [Sheet]
FILE NAME: c:\bms\dvltech-pw\petro.kravets\d0140565\3993 Watermain.dgn

USER NAME = pk	DESIGNED - AMP	REVISED -	
	DRAWN - AMP	REVISED -	
	CHECKED - PK	REVISED -	
PLOT DATE = 1/7/2026	DATE - 01/07/2026	REVISED -	

STATE OF ILLINOIS
DEPARTMENT OF TRANSPORTATION

BRAINTREE DRIVE
WATER MAIN PLAN AND PROFILE

SCALE: 1"=20' | SHEET 11 OF 14 SHEETS | STA. 149+00.00 TO STA. 154+00.00

MUN RTE.	SECTION	COUNTY	TOTAL SHEETS	SHEET NO.
4029	23-00146-00-PV	COOK	315	118

CONTRACT NO. 61M26

ILLINOIS FED. AID PROJECT

LEGEND

- WATER MAIN CASING PIPE
- WATER MAIN CASING JACKING SUGGESTED PIT LOCATION
- STEEL CASING PIPE, BORED AND JACKED
- EXISTING VALVE VAULT
- EXISTING VALVE BOX
- PROPOSED VALVE VAULT

46 STA 156+81.1, 75.4' LT
VV TA 6 DIA T1F CL
WATER VALVES 12"
RIM = 801.75

47 STA 156+08.5, 86.1' RT
FIRE HYD W/AUX V & VB

48 STA 156+04.8, 102.5' RT
VV TA 6 DIA T1F CL
WATER VALVES 12"
RIM = 800.94

49 STA 157+06.8, 23.9' LT
VV TA 6 DIA T1F CL
WATER VALVES 30"
RIM = 801.23

50 STA 157+00.0, 29.1' LT
FIRE HYD W/AUX V & VB

51 STA 157+70.0, 13.0' LT
VV TA 6 DIA T1F CL
WATER VALVES 12"
RIM = 801.26

96 316' - D I WATER MAIN 12"
TBF = 232 CU YD

97 64' - D I WATER MAIN 12"
TBF = 46 CU YD

98 5' - D I WATER MAIN 12"
TBF = 5 CU YD

99 139' - D I WATER MAIN 12"
TBF = 72 CU YD

100 3' - D I WATER MAIN 8"
TBF = 0 CU YD

101 5' - D I WATER MAIN 6"
TBF = 0 CU YD

102 14' - D I WATER MAIN 12"
TBF = 0 CU YD

103 5' - D I WATER MAIN 12"
TBF = 0 CU YD

104 22' - D I WATER MAIN 12"
TBF = 18 CU YD

105 11' - D I WATER MAIN 8"
TBF = 7 CU YD

106 5' - D I WATER MAIN 6"
TBF = 0 CU YD

107 68' - D I WATER MAIN 12"
TBF = 50 CU YD

108 12' - D I WATER MAIN 12"
TBF = 10 CU YD

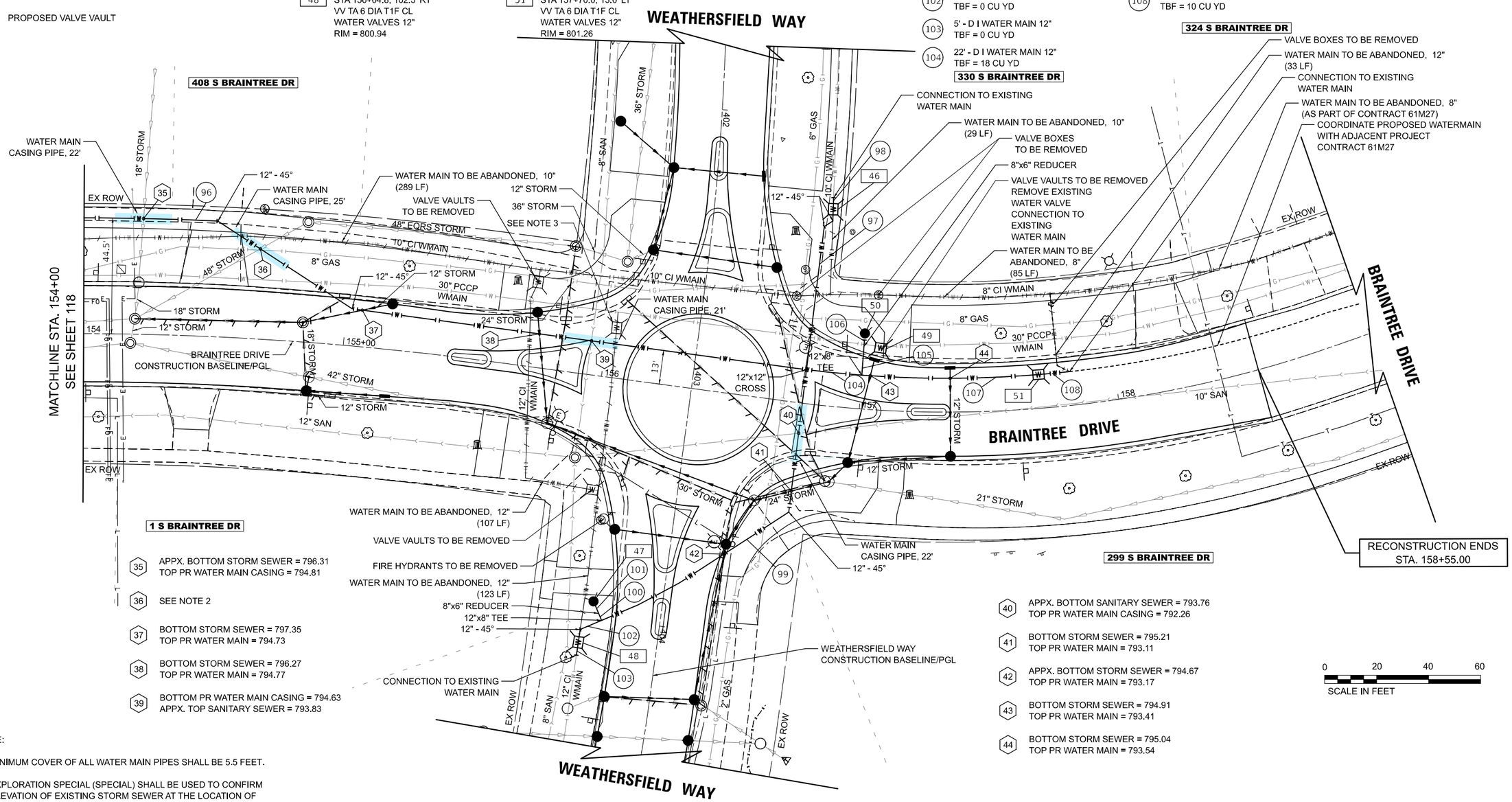

35 APPX. BOTTOM STORM SEWER = 796.31
TOP PR WATER MAIN CASING = 794.81

36 SEE NOTE 2

37 BOTTOM STORM SEWER = 797.35
TOP PR WATER MAIN = 794.73

38 BOTTOM STORM SEWER = 796.27
TOP PR WATER MAIN = 794.77

39 BOTTOM PR WATER MAIN CASING = 794.63
APPX. TOP SANITARY SEWER = 793.83

40 APPX. BOTTOM SANITARY SEWER = 793.76
TOP PR WATER MAIN CASING = 792.26

41 BOTTOM STORM SEWER = 795.21
TOP PR WATER MAIN = 793.11

42 APPX. BOTTOM STORM SEWER = 794.67
TOP PR WATER MAIN = 793.17

43 BOTTOM STORM SEWER = 794.91
TOP PR WATER MAIN = 793.41

44 BOTTOM STORM SEWER = 795.04
TOP PR WATER MAIN = 793.54

NOTE:

1. MINIMUM COVER OF ALL WATER MAIN PIPES SHALL BE 5.5 FEET.
2. EXPLORATION SPECIAL (SPECIAL) SHALL BE USED TO CONFIRM ELEVATION OF EXISTING STORM SEWER AT THE LOCATION OF CROSSING. IF PROPOSED WATER MAIN CAN BE INSTALLED MORE THAN 18" ABOVE THE STORM SEWER, WATER MAIN CASING SHALL NOT BE PROVIDED.
3. VAULT SHOWN BASED ON GIS INFORMATION. CONTRACTOR TO CONFIRM PRESENCE DURING REMOVAL & EXCAVATION OPERATIONS. IF PRESENT, REMOVE VAULT AS "VALVE VAULTS TO BE REMOVED".

MODEL: Braintree - Sheet 12-1 [Sheet]
FILE NAME: c:\bmsi\civltech-pw\petro.kravets\d0140565\3993 Watermain.dgn

USER NAME = pk	DESIGNED - AMP	REVISED -	
	DRAWN - AMP	REVISED -	
	CHECKED - PK	REVISED -	
PLOT DATE = 1/7/2026	DATE - 01/07/2026	REVISED -	

STATE OF ILLINOIS
DEPARTMENT OF TRANSPORTATION

BRAINTREE DRIVE
WATER MAIN PLAN AND PROFILE

SCALE: 1"=20' | SHEET 12 OF 14 SHEETS | STA. 154+00.00 TO STA. 159+00.00

MUN RTE.	SECTION	COUNTY	TOTAL SHEETS	SHEET NO.
4029	23-00146-00-PV	COOK	315	119

CONTRACT NO. 61M26

ILLINOIS | FED. AID PROJECT

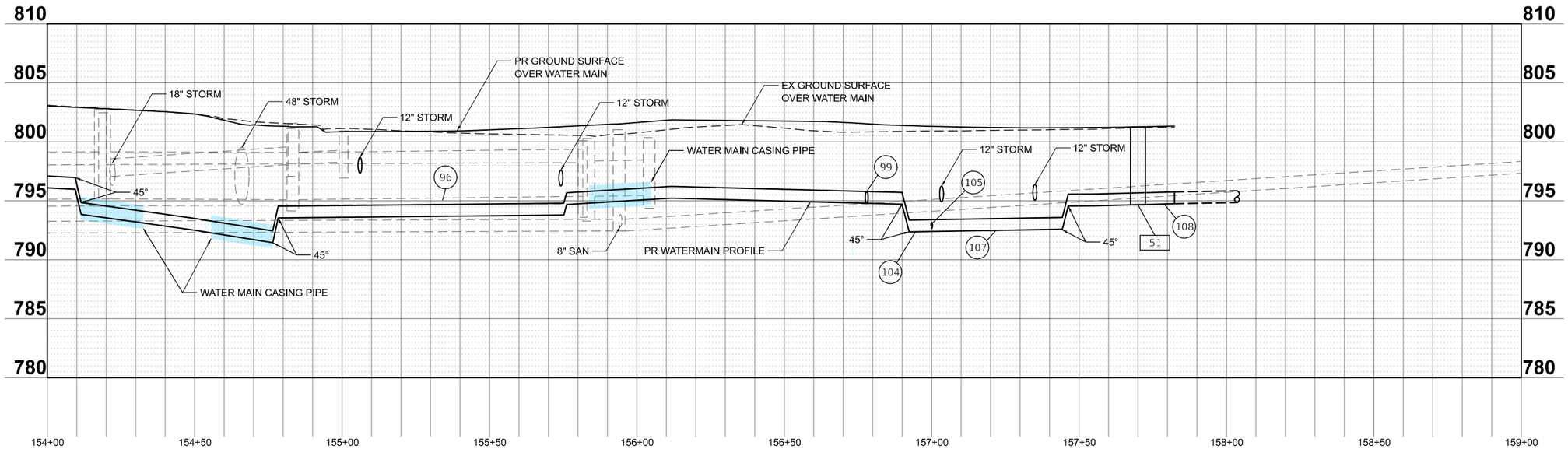

MODEL: Braintree - Sheet 12-2
FILE NAME: c:\bms\dv\tech-pw\petro.kravets\d0140565\3993 Watermain.dgn

USER NAME = pk	DESIGNED - AMP	REVISED -	
	DRAWN - AMP	REVISED -	
	CHECKED - PK	REVISED -	
PLOT DATE = 1/7/2026	DATE - 01/07/2026	REVISED -	

STATE OF ILLINOIS
DEPARTMENT OF TRANSPORTATION

BRAINTREE DRIVE
WATER MAIN PLAN AND PROFILE

SCALE: 1"=20' | SHEET 13 OF 14 SHEETS | STA. 154+00.00 TO STA. 159+00.00

MUN RTE.	SECTION	COUNTY	TOTAL SHEETS	SHEET NO.
4029	23-00146-00-PV	COOK	315	120
		CONTRACT NO. 61M26		
		ILLINOIS	FED. AID PROJECT	

LEGEND

- WATER MAIN CASING PIPE
- WATER MAIN CASING JACKING SUGGESTED PIT LOCATION
- STEEL CASING PIPE, BORED AND JACKED
- EXISTING VALVE VAULT
- EXISTING VALVE BOX
- PROPOSED VALVE VAULT

52 STA 301+89.7, 22.7' LT
VV TA 5 DIA T1F CL
WATER VALVES 10"
RIM = 806.24

53 STA 301+96.8, 71.4' RT
VV TA 5 DIA T1F CL
WATER VALVES 8"
RIM = 807.94

54 STA 302+39.7, 23.1' LT
FIRE HYD W/AUX V & VB

109 5' - D I WATER MAIN 10"
TBF = 52 CU YD

110 5' - D I WATER MAIN 10"
TBF = 0 CU YD

111 99' - D I WATER MAIN 8"
TBF = 52 CU YD

112 5' - D I WATER MAIN 8"
TBF = 0 CU YD

113 43' - D I WATER MAIN 10"
TBF = 6 CU YD

114 5' - D I WATER MAIN 6"
TBF = 0 CU YD

83 SEE SHEET 117

45 APPX. BOTTOM STORM SEWER = 801.08
TOP PR WATER MAIN = 799.58

46 BOTTOM PR WATER MAIN = 799.30
APPX. TOP SANITARY SEWER = 792.00

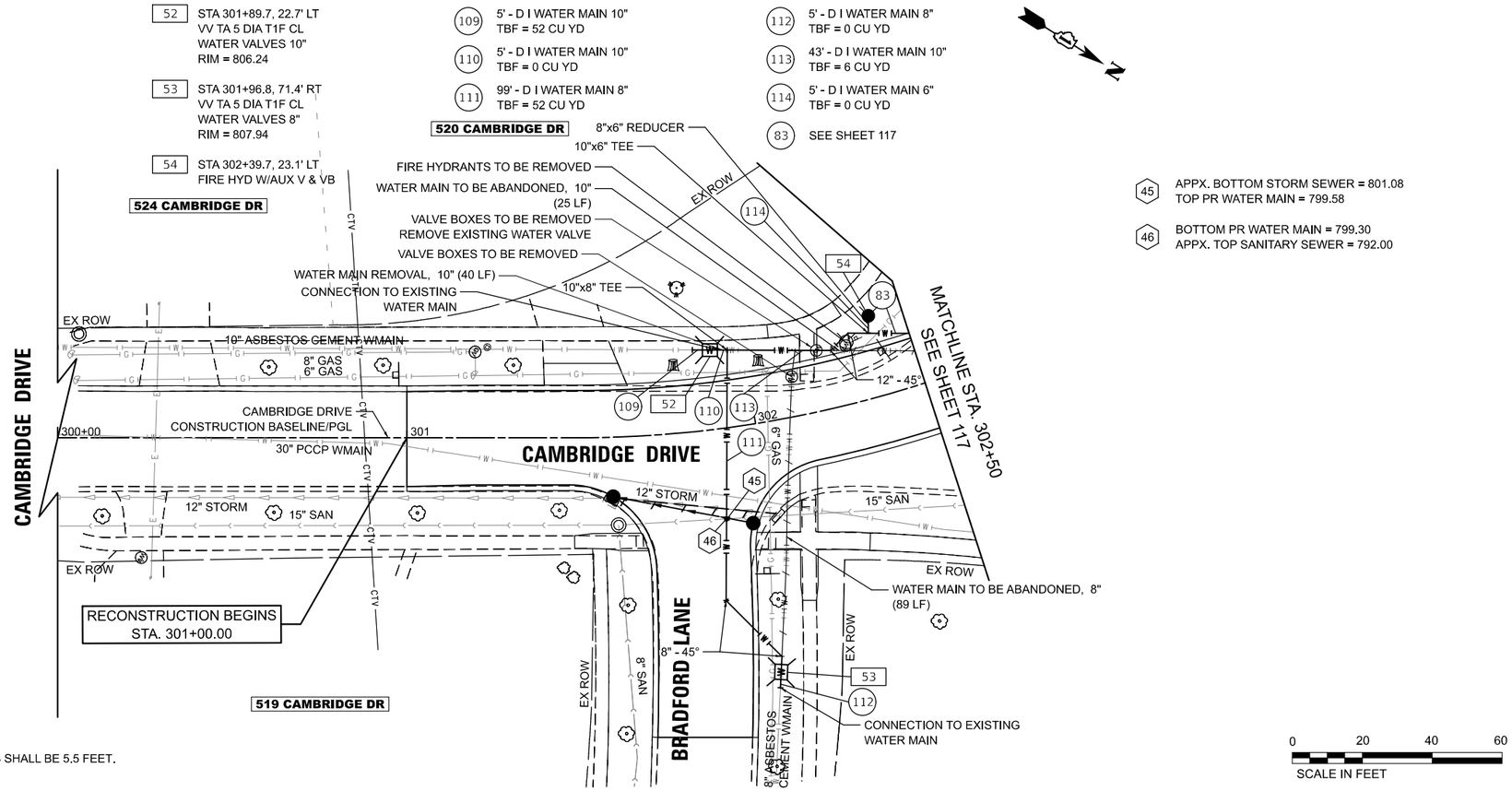

NOTE:

1. MINIMUM COVER OF ALL WATER MAIN PIPES SHALL BE 5.5 FEET.

0 20 40 60
SCALE IN FEET

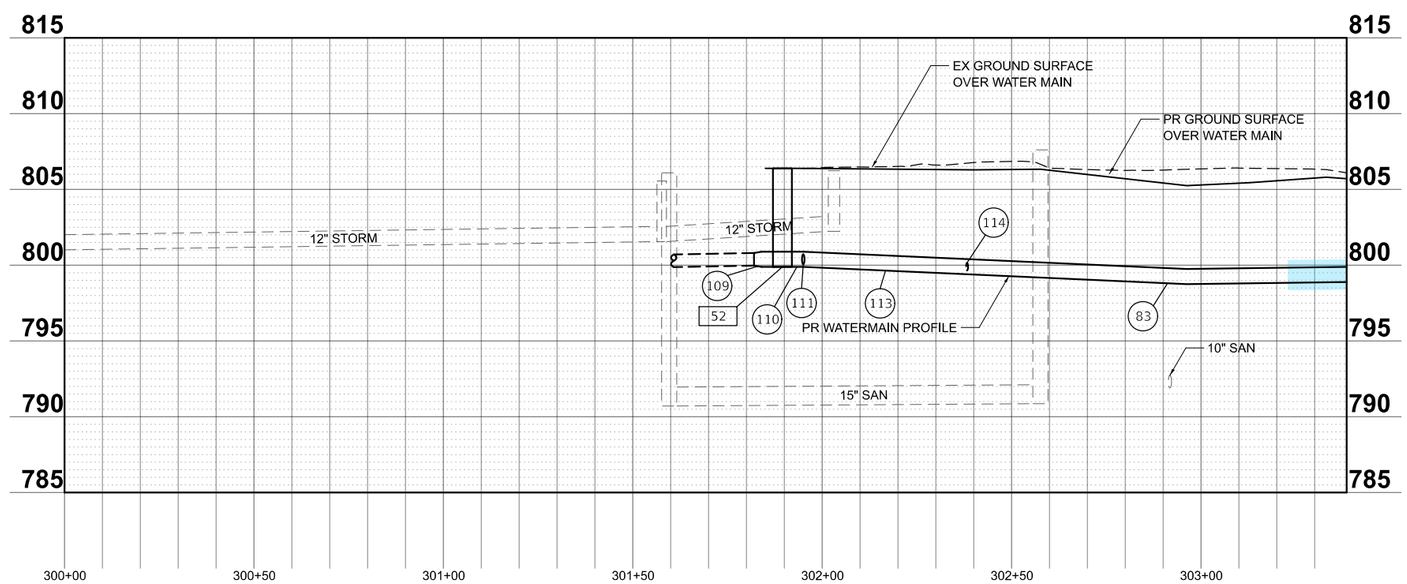

MODEL: Cambridge - Sheet 1 [Sheet]
FILE NAME: c:\bms\cadtech-pw\petro.kravets\d0140565\3993 Watermain.dgn

USER NAME = pk	DESIGNED - AMP	REVISED -	
	DRAWN - AMP	REVISED -	
	CHECKED - PK	REVISED -	
PLOT DATE = 1/7/2026	DATE - 01/07/2026	REVISED -	

STATE OF ILLINOIS
DEPARTMENT OF TRANSPORTATION

CAMBRIDGE DRIVE
WATER MAIN PLAN AND PROFILE

SCALE:1"=20' | SHEET 14 OF 14 SHEETS | STA. 300+00.00 TO STA. 302+50.00

MUN RTE.	SECTION	COUNTY	TOTAL SHEETS	SHEET NO.
4029	23-00146-00-PV	COOK	315	121

CONTRACT NO. 61M26

ILLINOIS FED. AID PROJECT

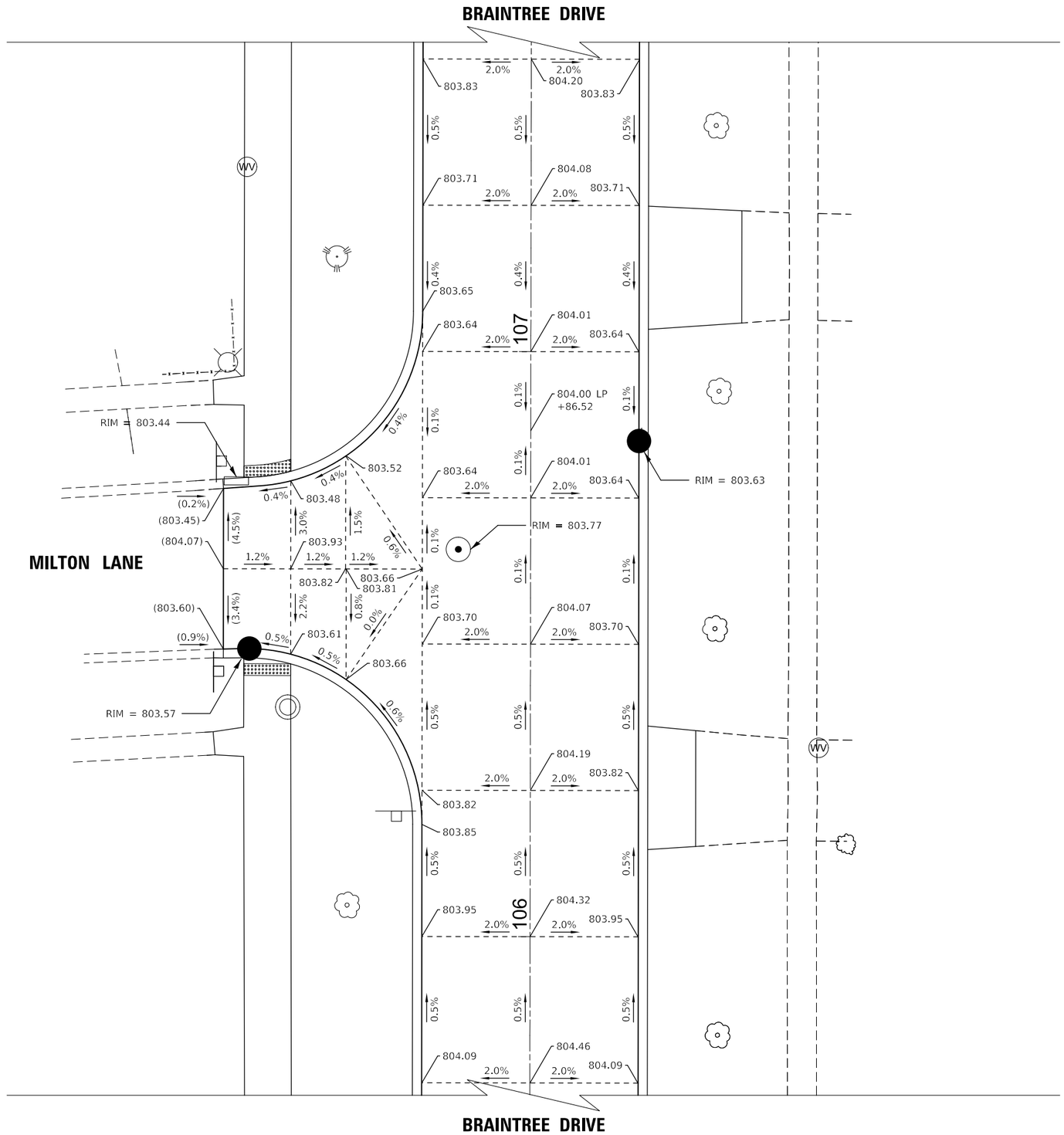

N

LEGEND

XXX.XX PROPOSED ELEVATION
(XXX.XX) EXISTING ELEVATION

NOTES

1) ELEVATIONS ARE GIVEN EVERY 25' (TYP).

0 10 20 30
SCALE IN FEET

MODEL: Intersection Grading-1 [Sheet]
FILE NAME: c:\bms\civil\tech-pw\petro.kravets\d0140567\3993 Intersection Grading.dgn

USER NAME = pk	DESIGNED - AMP	REVISED -	STATE OF ILLINOIS DEPARTMENT OF TRANSPORTATION
	DRAWN - AMP	REVISED -	
	CHECKED - PK	REVISED -	
PLOT DATE = 12/15/2025	DATE - 12/12/2025	REVISED -	

BRAINTREE DRIVE
INTERSECTION GRADING PLAN - BRAINTREE DR AND MILTON LN

SCALE: SHEET 1 OF 10 SHEETS STA. TO STA.

MUN RTE.	SECTION	COUNTY	TOTAL SHEETS	SHEET NO.
4029	23-00146-00-PV	COOK	315	122
		CONTRACT NO. 61M26		
		ILLINOIS FED. AID PROJECT		

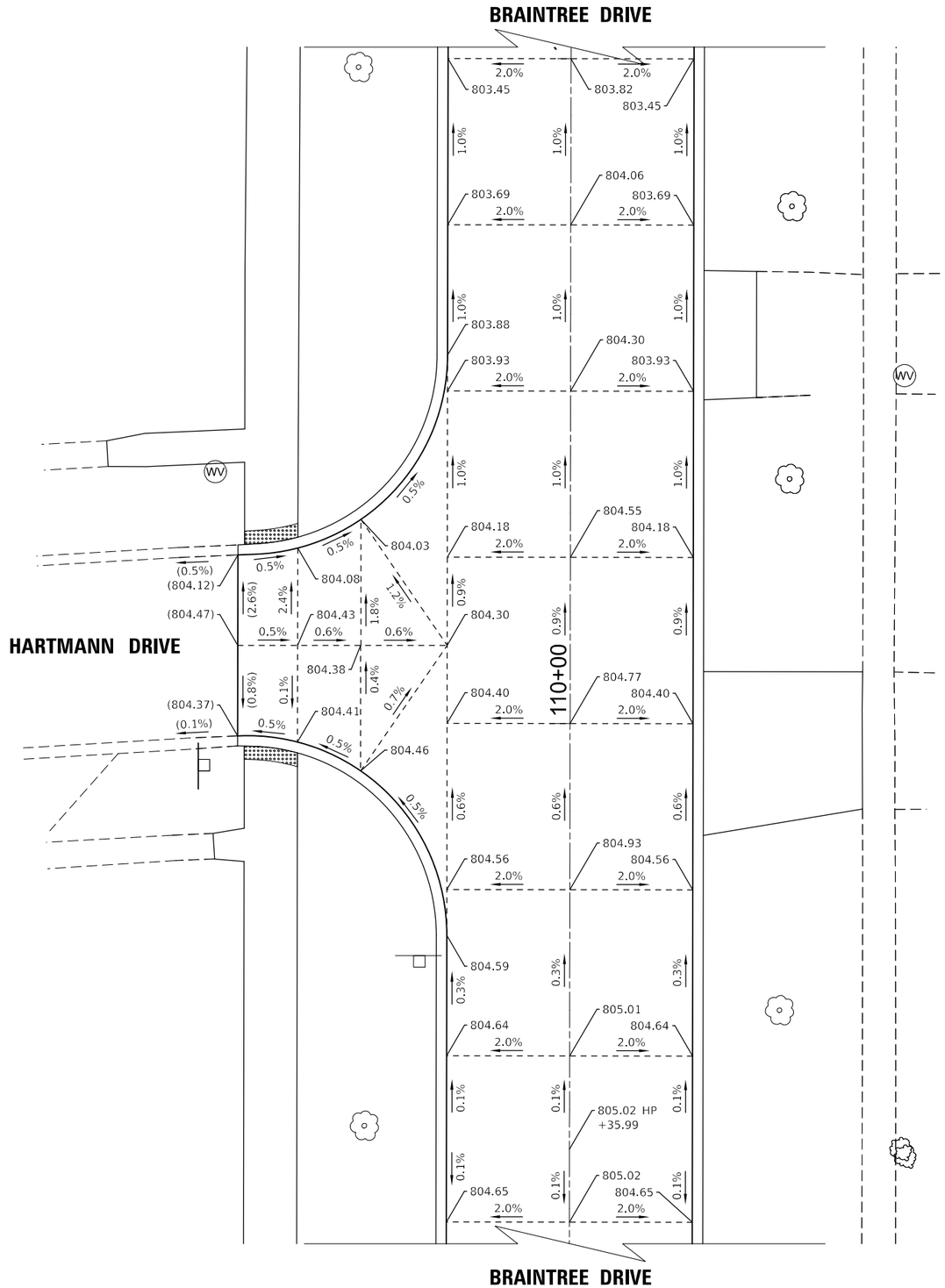

N

LEGEND

XXX.XX PROPOSED ELEVATION
(XXX.XX) EXISTING ELEVATION

NOTES

1) ELEVATIONS ARE GIVEN EVERY 25' (TYP).

0 10 20 30
SCALE IN FEET

MODEL: Intersection Grading-2 [Sheet]
FILE NAME: c:\bms\civiltech-pw\petro.kravets\d0140567\3993 Intersection Grading.dgn

USER NAME = pk	DESIGNED - AMP	REVISED -	
	DRAWN - AMP	REVISED -	
	CHECKED - PK	REVISED -	
PLOT DATE = 12/11/2025	DATE - 12/12/2025	REVISED -	

STATE OF ILLINOIS
DEPARTMENT OF TRANSPORTATION

BRAINTREE DRIVE
INTERSECTION GRADING PLAN - BRAINTREE DR AND HARTMANN DR

SCALE: SHEET 2 OF 10 SHEETS STA. TO STA.

MUN RTE.	SECTION	COUNTY	TOTAL SHEETS	SHEET NO.
4029	23-00146-00-PV	COOK	315	123

CONTRACT NO. 61M26

ILLINOIS FED. AID PROJECT

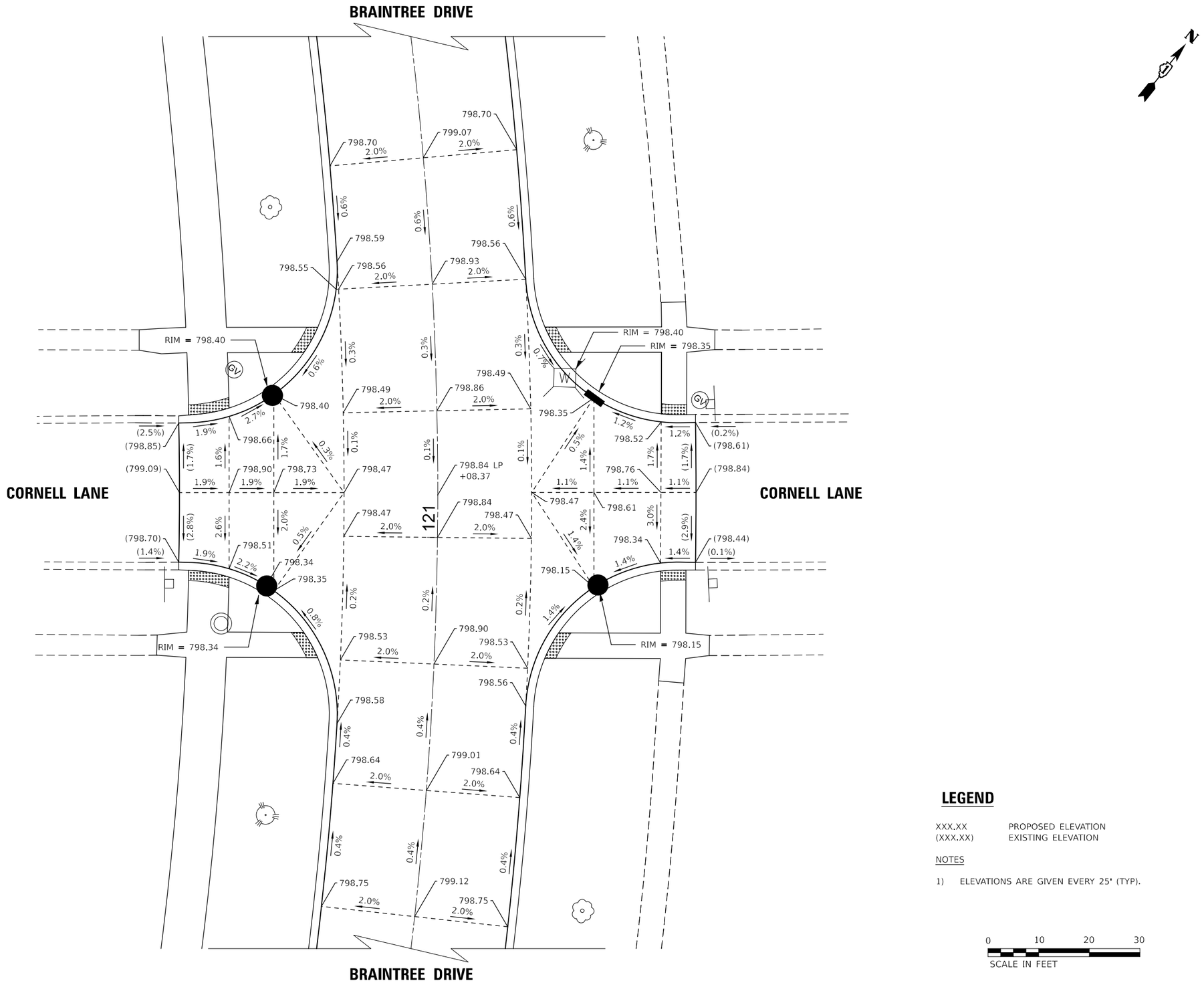

LEGEND

XXX.XX PROPOSED ELEVATION
(XXX.XX) EXISTING ELEVATION

NOTES

1) ELEVATIONS ARE GIVEN EVERY 25' (TYP).

0 10 20 30
SCALE IN FEET

MODEL: Intersection Grading-3 [Sheet]
FILE NAME: c:\bms\dvltech-pw\petro.kravets.d0140567\3993 Intersection Grading.dgn

USER NAME = pk	DESIGNED - AMP	REVISED -	
	DRAWN - AMP	REVISED -	
	CHECKED - PK	REVISED -	
PLOT DATE = 12/15/2025	DATE - 12/12/2025	REVISED -	

STATE OF ILLINOIS
DEPARTMENT OF TRANSPORTATION

BRAINTREE DRIVE
INTERSECTION GRADING PLAN - BRAINTREE DR AND CORNELL LN

SCALE: SHEET 3 OF 10 SHEETS STA. TO STA.

MUN RTE.	SECTION	COUNTY	TOTAL SHEETS	SHEET NO.
4029	23-00146-00-PV	COOK	315	124

CONTRACT NO. 61M26

ILLINOIS FED. AID PROJECT

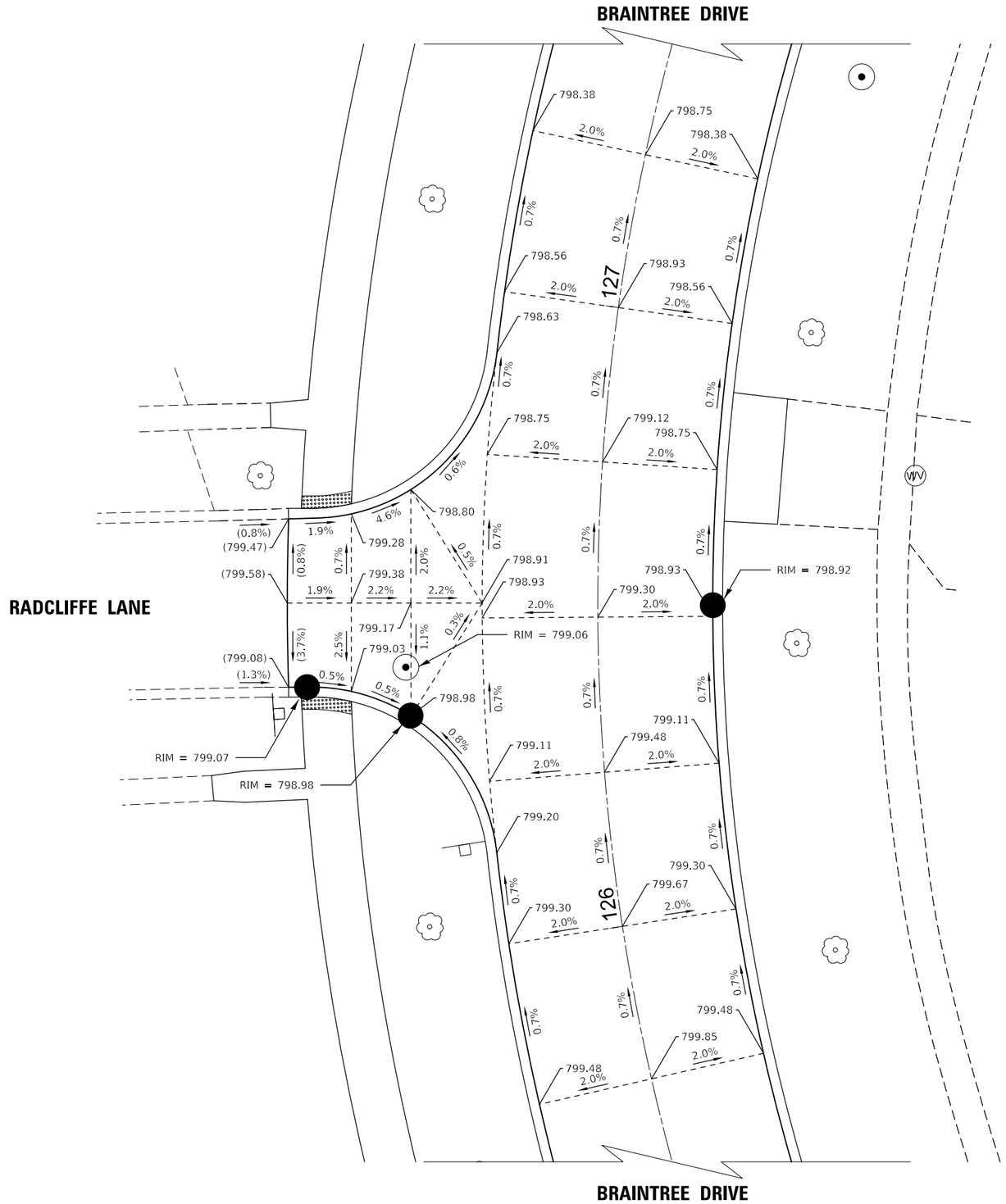

LEGEND

XXX.XX PROPOSED ELEVATION
(XXX.XX) EXISTING ELEVATION

NOTES

1) ELEVATIONS ARE GIVEN EVERY 25' (TYP).

0 10 20 30
SCALE IN FEET

MODEL: Intersection Grading-4 [Sheet]
FILE NAME: c:\bms\dvlltech-pw\petro.kravets\d0140567399 3 Intersection Grading.dgn

USER NAME = pk	DESIGNED - AMP	REVISED -	STATE OF ILLINOIS DEPARTMENT OF TRANSPORTATION
	DRAWN - AMP	REVISED -	
	CHECKED - PK	REVISED -	
PLOT DATE = 12/15/2025	DATE - 12/12/2025	REVISED -	

BRAINTREE DRIVE
INTERSECTION GRADING PLAN - BRAINTREE DR AND RADCLIFFE LN

SCALE: SHEET 4 OF 10 SHEETS STA. TO STA.

MUN RTE.	SECTION	COUNTY	TOTAL SHEETS	SHEET NO.
4029	23-00146-00-PV	COOK	315	125

CONTRACT NO. 61M26

ILLINOIS FED. AID PROJECT

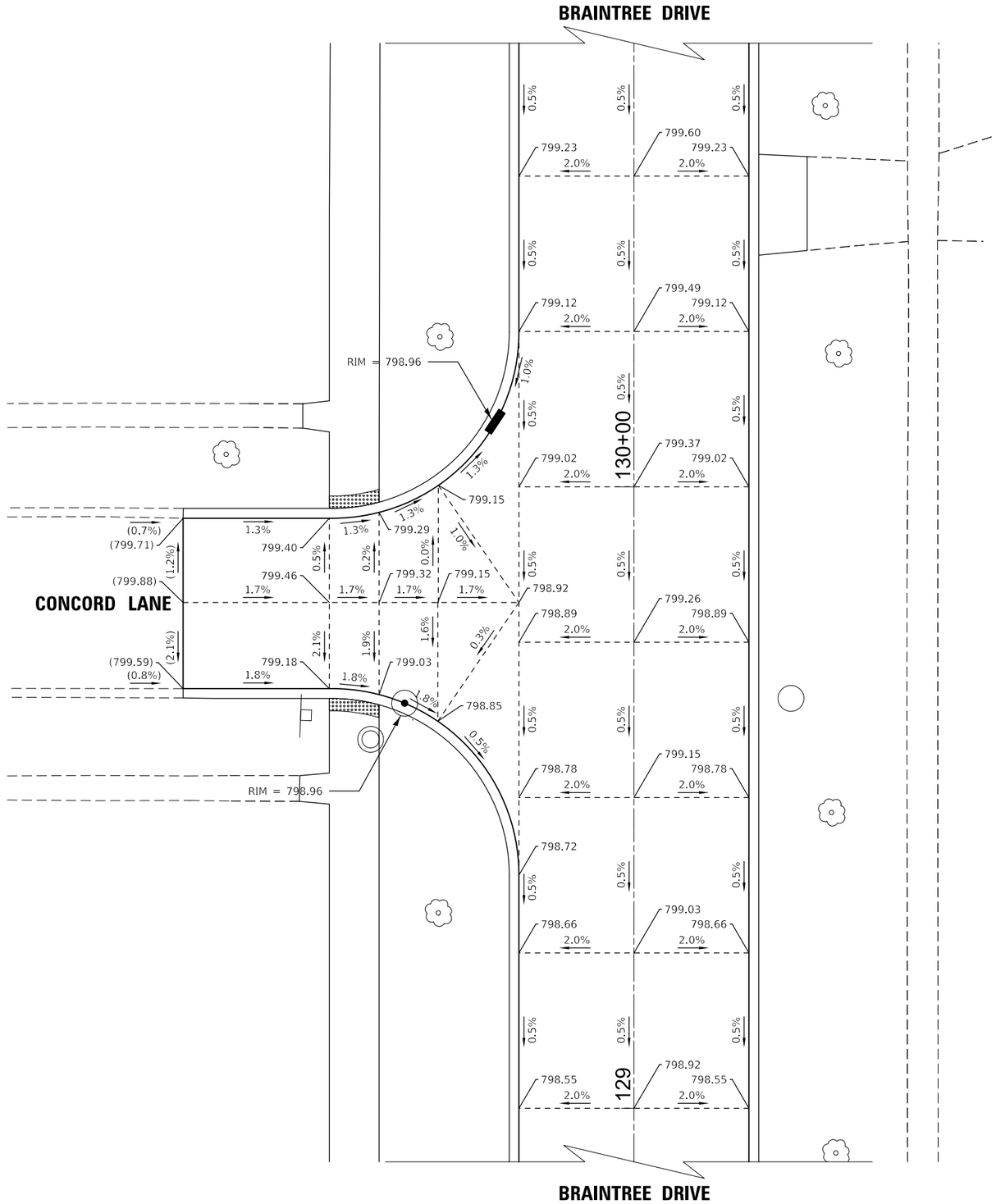

LEGEND

XXX.XX PROPOSED ELEVATION
(XXX.XX) EXISTING ELEVATION

NOTES

1) ELEVATIONS ARE GIVEN EVERY 25' (TYP).

0 10 20 30
SCALE IN FEET

MODEL: Intersection Grading-5 [Sheet]
FILE NAME: c:\bms\dvltech-pw\petro.kravets\d0140567\3993 Intersection Grading.dgn

USER NAME = pk	DESIGNED - AMP	REVISED -	
	DRAWN - AMP	REVISED -	
	CHECKED - PK	REVISED -	
PLOT DATE = 12/15/2025	DATE - 12/12/2025	REVISED -	

STATE OF ILLINOIS
DEPARTMENT OF TRANSPORTATION

BRAINTREE DRIVE
INTERSECTION GRADING PLAN - BRAINTREE DR AND CONCORD LN

SCALE: SHEET 5 OF 10 SHEETS STA. TO STA.

MUN RTE.	SECTION	COUNTY	TOTAL SHEETS	SHEET NO.
4029	23-00146-00-PV	COOK	315	126

CONTRACT NO. 61M26

ILLINOIS FED. AID PROJECT

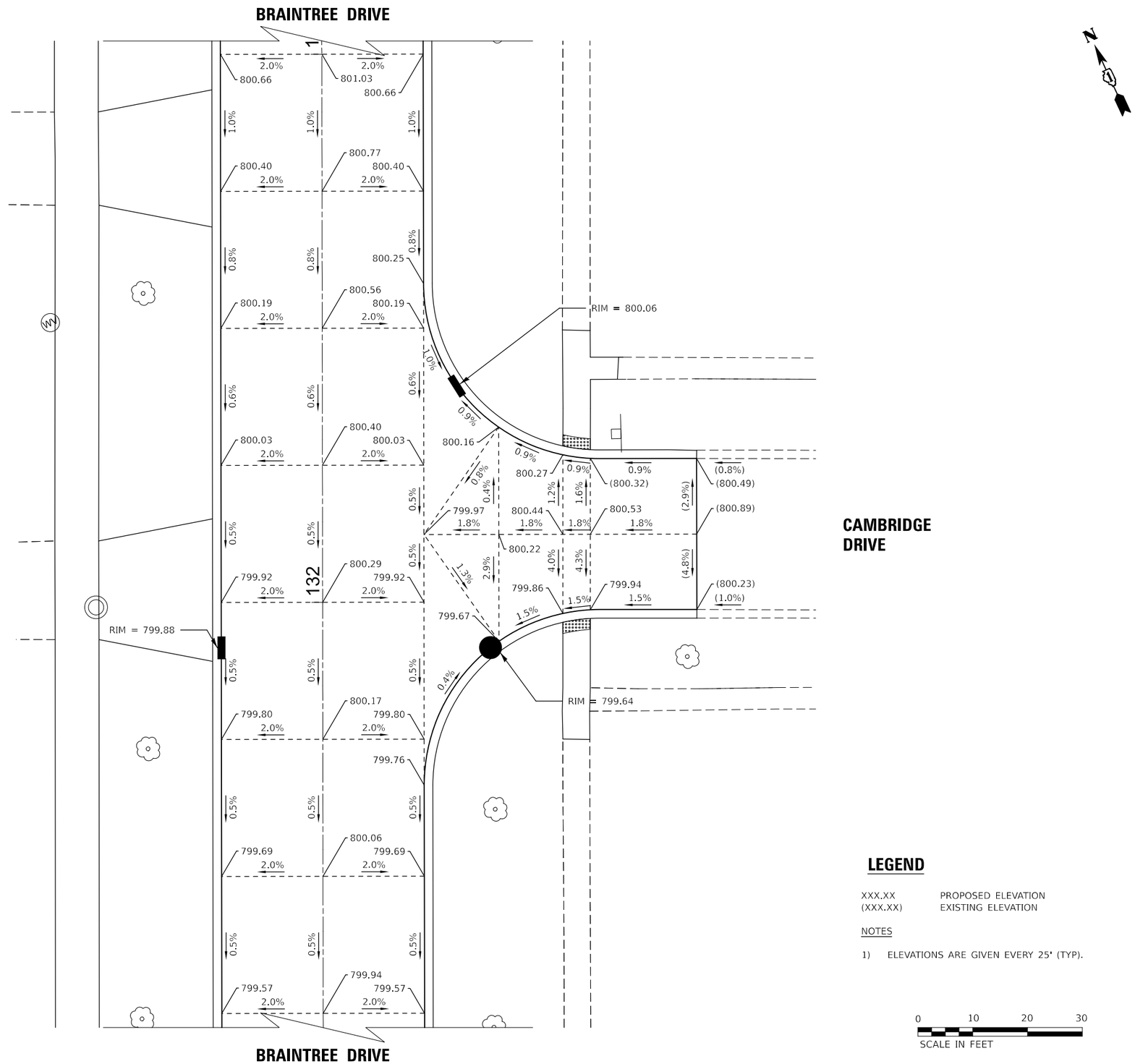

LEGEND

XXX.XX	PROPOSED ELEVATION
(XXX.XX)	EXISTING ELEVATION

NOTES

1) ELEVATIONS ARE GIVEN EVERY 25' (TYP).

0 10 20 30
SCALE IN FEET

MODEL: Intersection Grading-6 [Sheet]
FILE NAME: c:\bms\dvltech-pw\petro.kravets\d0140567\3993 Intersection Grading.dgn

USER NAME = pk	DESIGNED - AMP	REVISED -	
	DRAWN - AMP	REVISED -	
	CHECKED - PK	REVISED -	
PLOT DATE = 12/15/2025	DATE - 12/12/2025	REVISED -	

STATE OF ILLINOIS
DEPARTMENT OF TRANSPORTATION

BRAINTREE DRIVE
INTERSECTION GRADING PLAN - BRAINTREE DR AND CAMBRIDGE DR

SCALE: | SHEET 6 OF 10 SHEETS | STA. | TO STA.

MUN RTE.	SECTION	COUNTY	TOTAL SHEETS	SHEET NO.
4029	23-00146-00-PV	COOK	315	127

CONTRACT NO. 61M26

ILLINOIS | FED. AID PROJECT

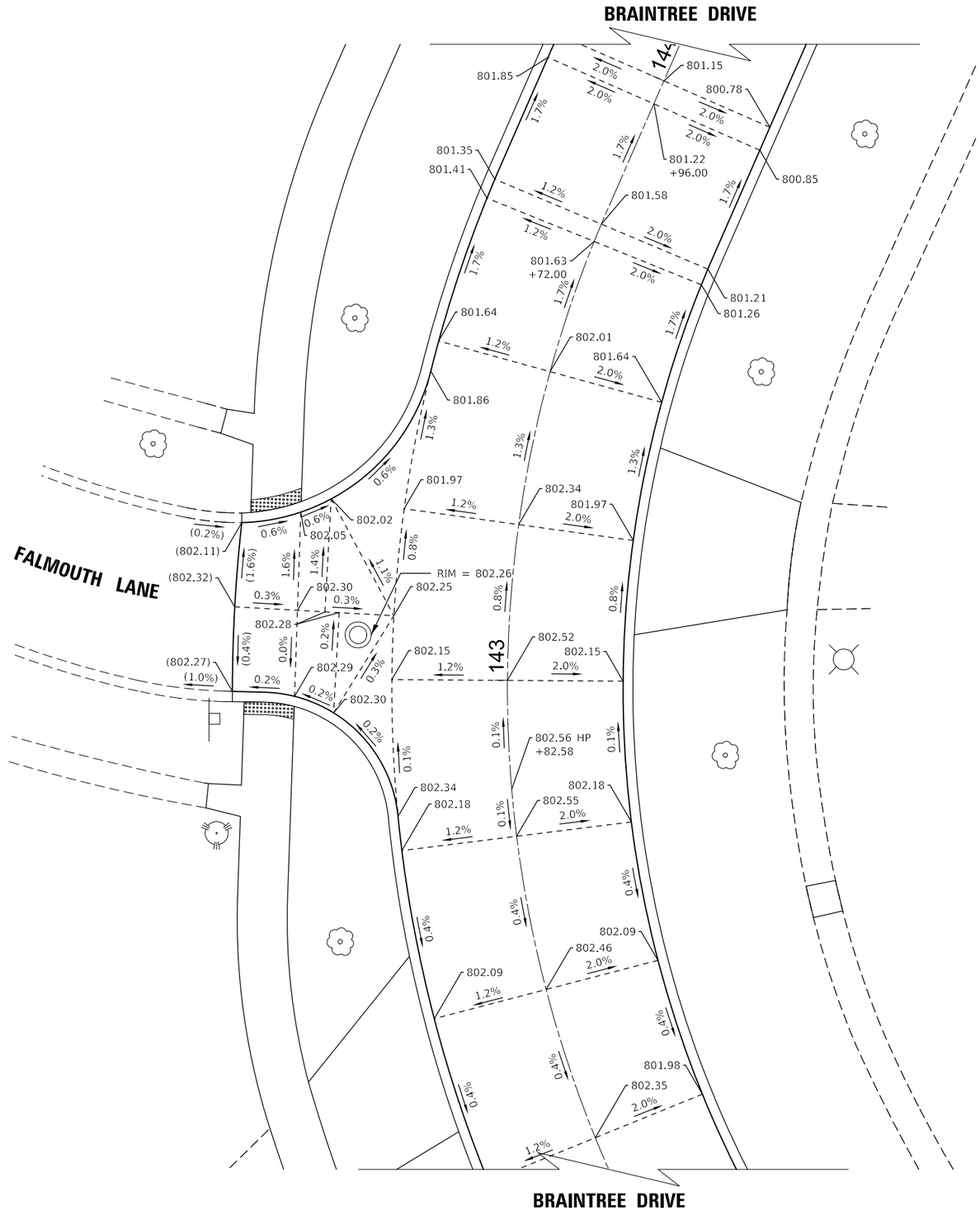

N

LEGEND

XXX.XX PROPOSED ELEVATION
(XXX.XX) EXISTING ELEVATION

NOTES

1) ELEVATIONS ARE GIVEN EVERY 25' (TYP).

0 10 20 30
SCALE IN FEET

MODEL: Intersection Grading-7 [Sheet]
FILE NAME: c:\bms\civiltech-pw\petro.kravets\d0140567\3993 Intersection Grading.dgn

USER NAME = pk	DESIGNED - AMP	REVISED -	STATE OF ILLINOIS DEPARTMENT OF TRANSPORTATION
	DRAWN - AMP	REVISED -	
	CHECKED - PK	REVISED -	
PLOT DATE = 12/15/2025	DATE - 12/12/2025	REVISED -	

BRAINTREE DRIVE
INTERSECTION GRADING PLAN - BRAINTREE DR AND FALMOUTH LN

SCALE: SHEET 7 OF 10 SHEETS STA. TO STA.

MUN RTE.	SECTION	COUNTY	TOTAL SHEETS	SHEET NO.
4029	23-00146-00-PV	COOK	315	128
		CONTRACT NO. 61M26		
	ILLINOIS	FED. AID PROJECT		

BRAINTREE DRIVE

BRADFORD LANE

CAMBRIDGE DRIVE

148

147

303

302

301

RIM = 807.60
RIM = 807.41
RIM = 807.30
RIM = 805.74
RIM = 805.31
RIM = 803.72

808.32
808.69
808.32
807.55
807.92
807.55
807.05
806.78
807.15
806.78
806.63
806.61
806.36
806.30
806.42
806.22
806.22
806.01
806.38
805.95
806.03
806.14
806.01
805.95
805.92
805.98
806.02
805.21
805.87
805.88
805.69
805.84
805.48
805.24
805.61
805.75
805.57
805.62
805.35
805.35
805.38
805.11
804.48
804.85
804.94
804.99
804.63
805.14
804.80
803.71
804.08
803.71
802.94
803.31
802.94
805.78
805.87
805.86
805.77
805.77
805.78
805.71
805.62
805.69
805.59
(807.84)
(808.38)
(807.93)
(804.28)
(804.90)
(804.50)

LEGEND

XXX.XX PROPOSED ELEVATION
(XXX.XX) EXISTING ELEVATION

NOTES

1) ELEVATIONS ARE GIVEN EVERY 25' (TYP).

0 10 20 30
SCALE IN FEET

MODEL: Intersection Grading-8 [Sheet]
FILE NAME: c:\bmsdvlltech-pw\petro.kravets\d0140567\3993 Intersection Grading.dgn

USER NAME = pk	DESIGNED - AMP	REVISED -	
	DRAWN - AMP	REVISED -	
	CHECKED - PK	REVISED -	
PLOT DATE = 12/15/2025	DATE - 12/12/2025	REVISED -	

STATE OF ILLINOIS
DEPARTMENT OF TRANSPORTATION

BRAINTREE DRIVE
INTERSECTION GRADING PLAN - BRAINTREE DR AND CAMBRIDGE DR

SCALE: SHEET 8 OF 10 SHEETS STA. TO STA.

MUN RTE.	SECTION	COUNTY	TOTAL SHEETS	SHEET NO.
4029	23-00146-00-PV	COOK	315	129

CONTRACT NO. 61M26

ILLINOIS FED. AID PROJECT

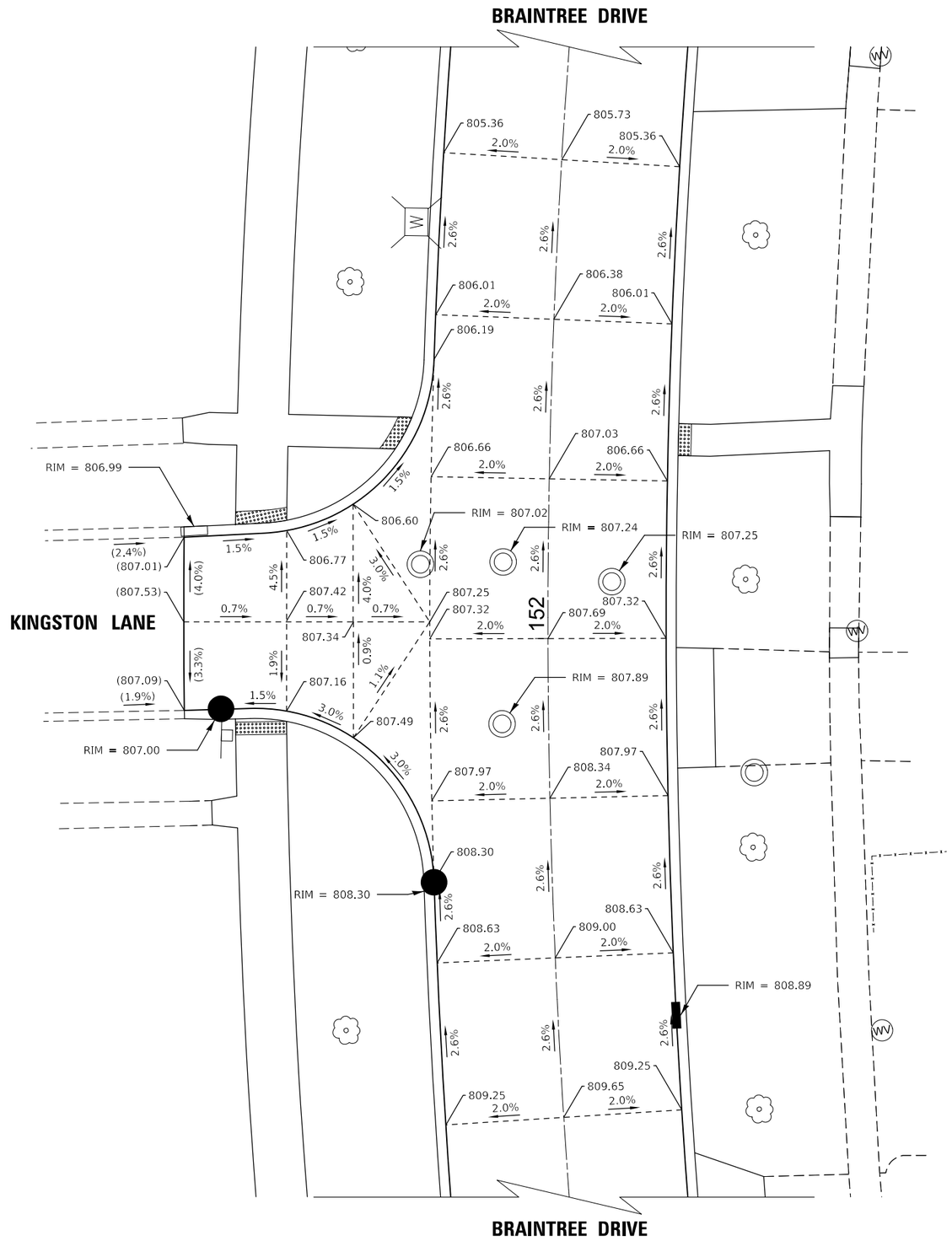

LEGEND

XXX.XX PROPOSED ELEVATION
(XXX.XX) EXISTING ELEVATION

NOTES

1) ELEVATIONS ARE GIVEN EVERY 25' (TYP).

0 10 20 30
SCALE IN FEET

MODEL: Intersection Grading-9 [Sheet]
FILE NAME: c:\bms\civiltech-pw\peltro.kravets\d0140567\3993 Intersection Grading.dgn

USER NAME = pk	DESIGNED - AMP	REVISED -	
	DRAWN - AMP	REVISED -	
	CHECKED - PK	REVISED -	
PLOT DATE = 12/15/2025	DATE - 12/12/2025	REVISED -	

STATE OF ILLINOIS
DEPARTMENT OF TRANSPORTATION

BRAINTREE DRIVE
INTERSECTION GRADING PLAN - BRAINTREE DR AND KINGSTON LN

SCALE: SHEET 9 OF 10 SHEETS STA. TO STA.

MUN RTE.	SECTION	COUNTY	TOTAL SHEETS	SHEET NO.
4029	23-00146-00-PV	COOK	315	130

CONTRACT NO. 61M26

ILLINOIS FED. AID PROJECT

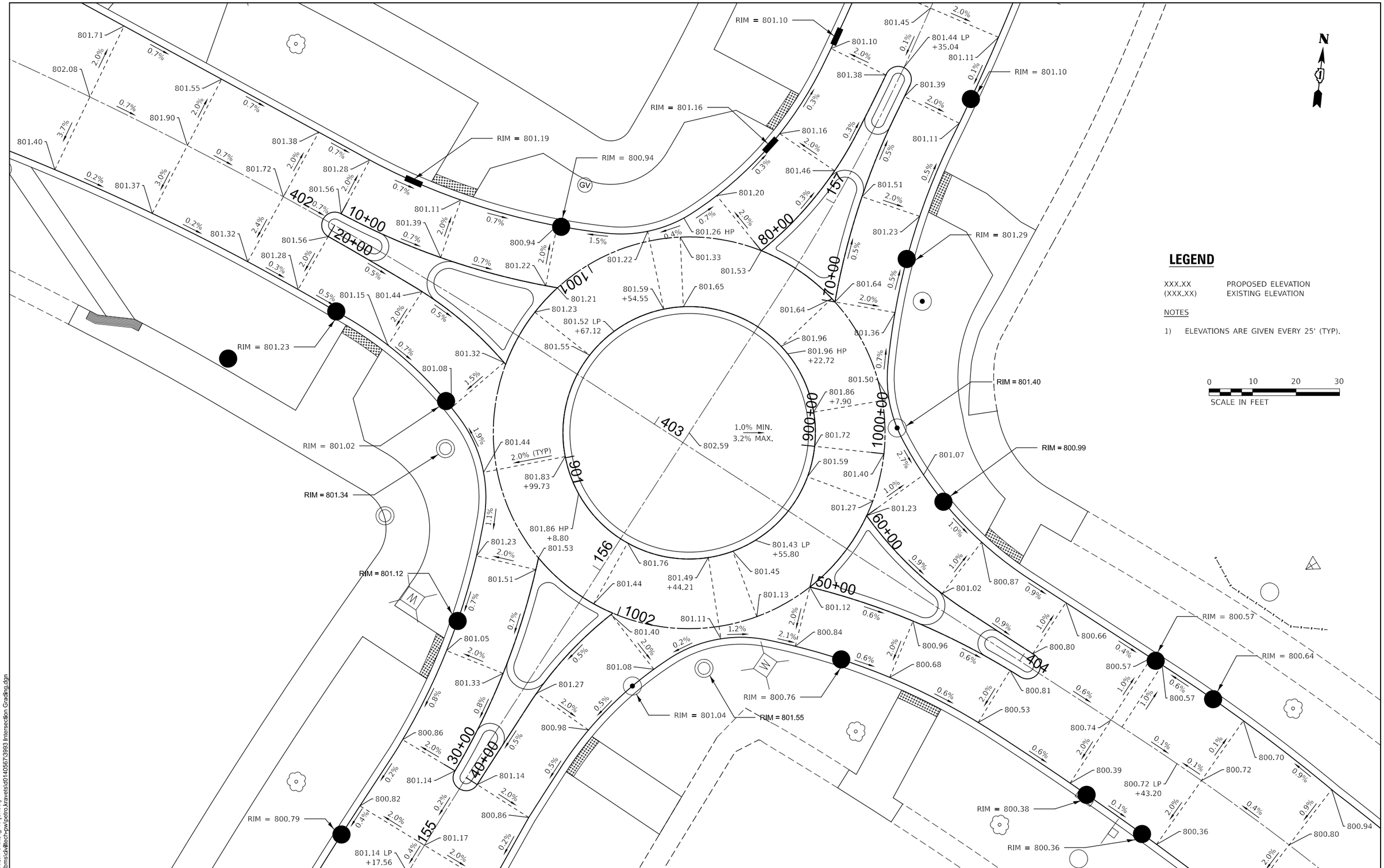

MODEL: Intersection Grading-10 [Sheet]
FILE NAME: c:\bms\dvlltech-pw\petro.kravets\d0140567\3993 Intersection Grading.dgn

USER NAME = pk	DESIGNED - AMP	REVISED -	
	DRAWN - AMP	REVISED -	
	CHECKED - PK	REVISED -	
PLOT DATE = 12/15/2025	DATE - 12/12/2025	REVISED -	

STATE OF ILLINOIS
DEPARTMENT OF TRANSPORTATION

BRAINTREE DRIVE
INTERSECTION GRADING PLAN - BRAINTREE DR AND WEATHERSFIELD WAY

SCALE: SHEET 10 OF 10 SHEETS STA. TO STA.

MUN RTE.	SECTION	COUNTY	TOTAL SHEETS	SHEET NO.
4029	23-00146-00-PV	COOK	315	131
		CONTRACT NO. 61M26		
		ILLINOIS	FED. AID PROJECT	

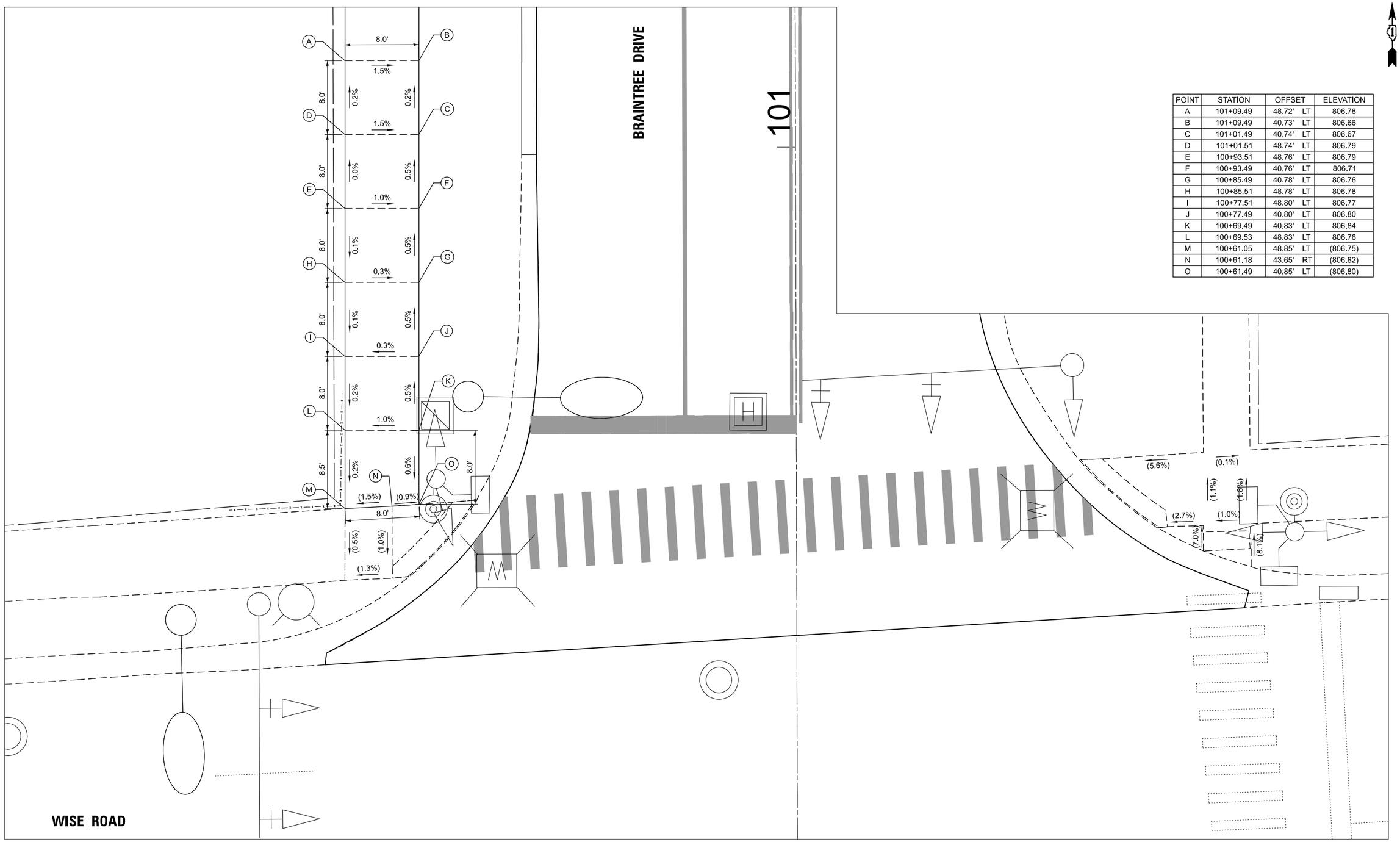

POINT	STATION	OFFSET	ELEVATION
A	101+09.49	48.72' LT	806.78
B	101+09.49	40.73' LT	806.66
C	101+01.49	40.74' LT	806.67
D	101+01.51	48.74' LT	806.79
E	100+93.51	48.76' LT	806.79
F	100+93.49	40.76' LT	806.71
G	100+85.49	40.78' LT	806.76
H	100+85.51	48.78' LT	806.78
I	100+77.51	48.80' LT	806.77
J	100+77.49	40.80' LT	806.80
K	100+69.49	40.83' LT	806.84
L	100+69.53	48.83' LT	806.76
M	100+61.05	48.85' LT	(806.75)
N	100+61.18	43.65' RT	(806.82)
O	100+61.49	40.85' LT	(806.80)

MODEL: ADA-1 [Sheet]
FILE NAME: c:\bmsi\dvlitech-pw\petro.kravets\d0140567\3993 ADA Curb Ramps.dgn

USER NAME = pk	DESIGNED - AMP	REVISED -	
	DRAWN - AMP	REVISED -	
	CHECKED - PK	REVISED -	
PLOT DATE = 12/15/2025	DATE - 12/12/2025	REVISED -	

STATE OF ILLINOIS
DEPARTMENT OF TRANSPORTATION

BRAINTREE DRIVE
ADA GRADING PLAN

SCALE: 1" = 5' | SHEET 1 OF 17 SHEETS | STA. TO STA.

MUN RTE.	SECTION	COUNTY	TOTAL SHEETS	SHEET NO.
4029	23-00146-00-PV	COOK	315	132

CONTRACT NO. 61M26

ILLINOIS | FED. AID PROJECT

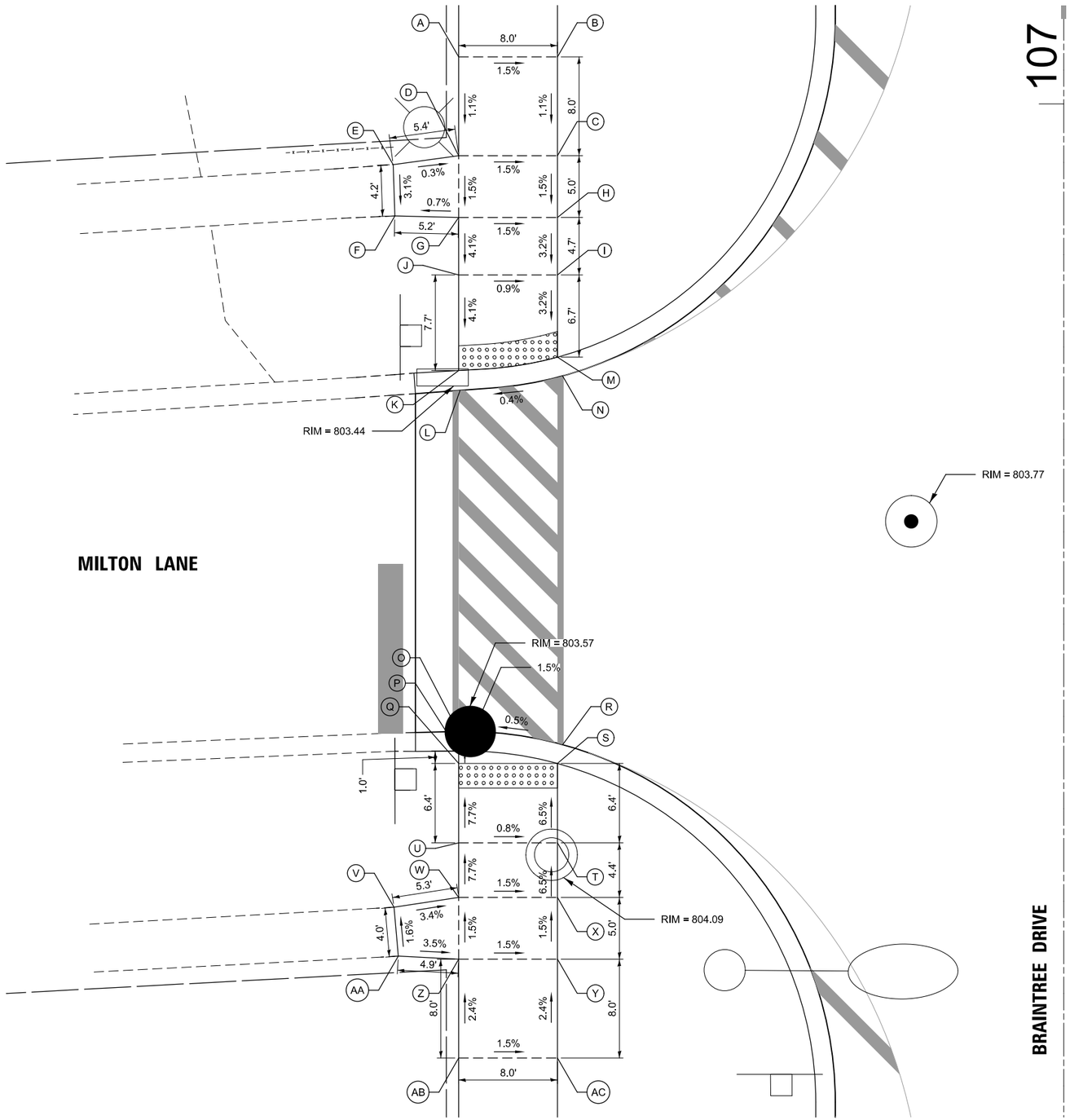

POINT	STATION	OFFSET	ELEVATION
A	107+03.81	49.00' LT	804.12
B	107+03.81	41.00' LT	804.00
C	106+95.81	41.00' LT	803.91
D	106+95.81	49.00' LT	804.03
E	106+95.08	54.31' LT	(804.05)
F	106+90.92	54.17' LT	(803.92)
G	106+90.82	49.00' LT	803.96
H	106+90.81	41.00' LT	803.84
I	106+86.15	41.00' LT	803.69
J	106+86.15	49.00' LT	803.75
K	106+78.41	49.00' LT	803.44
L	106+76.80	49.03' LT	803.45
M	106+79.50	41.00' LT	803.47
N	106+77.98	40.58' LT	803.48
O	106+49.19	49.03' LT	803.58
P	106+47.61	49.00' LT	803.57
Q	106+46.61	49.00' LT	803.59
R	106+48.13	40.58' LT	803.61
S	106+46.61	41.00' LT	803.60
T	106+40.18	41.00' LT	804.02
U	106+40.18	49.00' LT	804.09
V	106+34.96	54.23' LT	(804.61)
W	106+35.76	49.00' LT	804.43
X	106+35.76	41.00' LT	804.31
Y	106+30.76	41.00' LT	804.38
Z	106+30.76	49.00' LT	804.50
AA	106+31.01	53.89' LT	(804.67)
AB	106+22.76	49.00' LT	804.70
AC	106+22.76	41.00' LT	804.58

N

0 5 10 15
SCALE IN FEET

MODEL: ADA-2 [Sheet]
FILE NAME: c:\bms\civiltech-pw\peltro.kravets\d0140567\3993 ADA Curb Ramps.dgn

USER NAME = pk	DESIGNED - AMP	REVISED -	
	DRAWN - AMP	REVISED -	
	CHECKED - PK	REVISED -	
PLOT DATE = 12/15/2025	DATE - 12/12/2025	REVISED -	

STATE OF ILLINOIS
DEPARTMENT OF TRANSPORTATION

BRAINTREE DRIVE
ADA GRADING PLAN

SCALE: 1" = 5' | SHEET 2 OF 17 SHEETS | STA. TO STA.

MUN RTE.	SECTION	COUNTY	TOTAL SHEETS	SHEET NO.
4029	23-00146-00-PV	COOK	315	133

CONTRACT NO. 61M26

ILLINOIS | FED. AID PROJECT

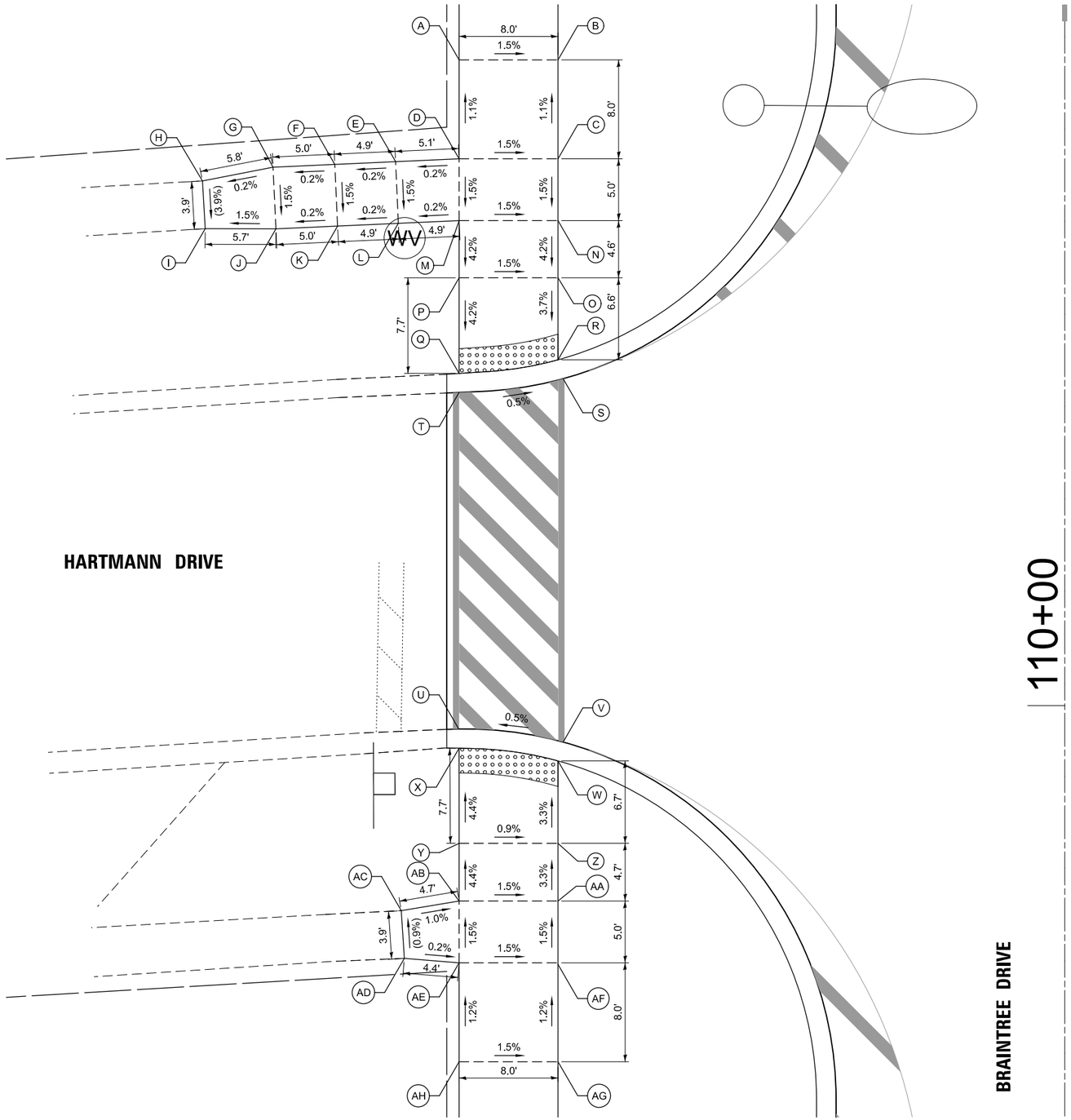

POINT	STATION	OFFSET	ELEVATION
A	110+52.24	49.00' LT	804.62
B	110+52.24	41.00' LT	804.50
C	110+44.24	41.00' LT	804.58
D	110+44.24	49.00' LT	804.70
E	110+44.01	54.14' LT	804.69
F	110+43.78	59.05' LT	804.68
G	110+43.55	64.05' LT	804.67
H	110+42.44	69.76' LT	(804.66)
I	110+38.58	69.54' LT	(804.51)
J	110+38.56	63.82' LT	804.60
K	110+38.79	58.83' LT	804.61
L	110+39.02	53.91' LT	804.62
M	110+39.24	49.00' LT	804.63
N	110+39.24	41.00' LT	804.51
O	110+34.61	41.00' LT	804.31
P	110+34.61	49.00' LT	804.43
Q	110+26.87	49.00' LT	804.11
R	110+27.97	41.00' LT	804.07
S	110+26.45	40.58' LT	804.08
T	110+25.34	48.93' LT	804.12
U	109+98.11	49.03' LT	804.37
V	109+97.05	40.58' LT	804.41
W	109+95.53	41.00' LT	804.40
X	109+96.56	49.00' LT	804.36
Y	109+88.86	49.00' LT	804.70
Z	109+88.86	41.00' LT	804.62
AA	109+84.20	41.00' LT	804.78
AB	109+84.20	49.00' LT	804.90
AC	109+83.41	53.68' LT	(804.95)
AD	109+79.56	53.43' LT	(804.99)
AE	109+79.20	49.00' LT	804.98
AF	109+79.20	41.00' LT	804.86
AG	109+71.20	41.00' LT	804.96
AH	109+71.20	49.00' LT	805.08

N

0 5 10 15
SCALE IN FEET

MODEL: ADA-3 [Sheet]
FILE NAME: c:\bms\ailtech-pw\petro.kravets\d0140567\3993.ADA Curb Ramps.dgn

USER NAME = pk	DESIGNED - AMP	REVISED -	
	DRAWN - AMP	REVISED -	
	CHECKED - PK	REVISED -	
PLOT DATE = 12/15/2025	DATE - 12/12/2025	REVISED -	

STATE OF ILLINOIS
DEPARTMENT OF TRANSPORTATION

BRAINTREE DRIVE
ADA GRADING PLAN

SCALE: 1" = 5' | SHEET 3 OF 17 SHEETS | STA. TO STA.

MUN RTE.	SECTION	COUNTY	TOTAL SHEETS	SHEET NO.
4029	23-00146-00-PV	COOK	315	134

CONTRACT NO. 61M26

ILLINOIS FED. AID PROJECT

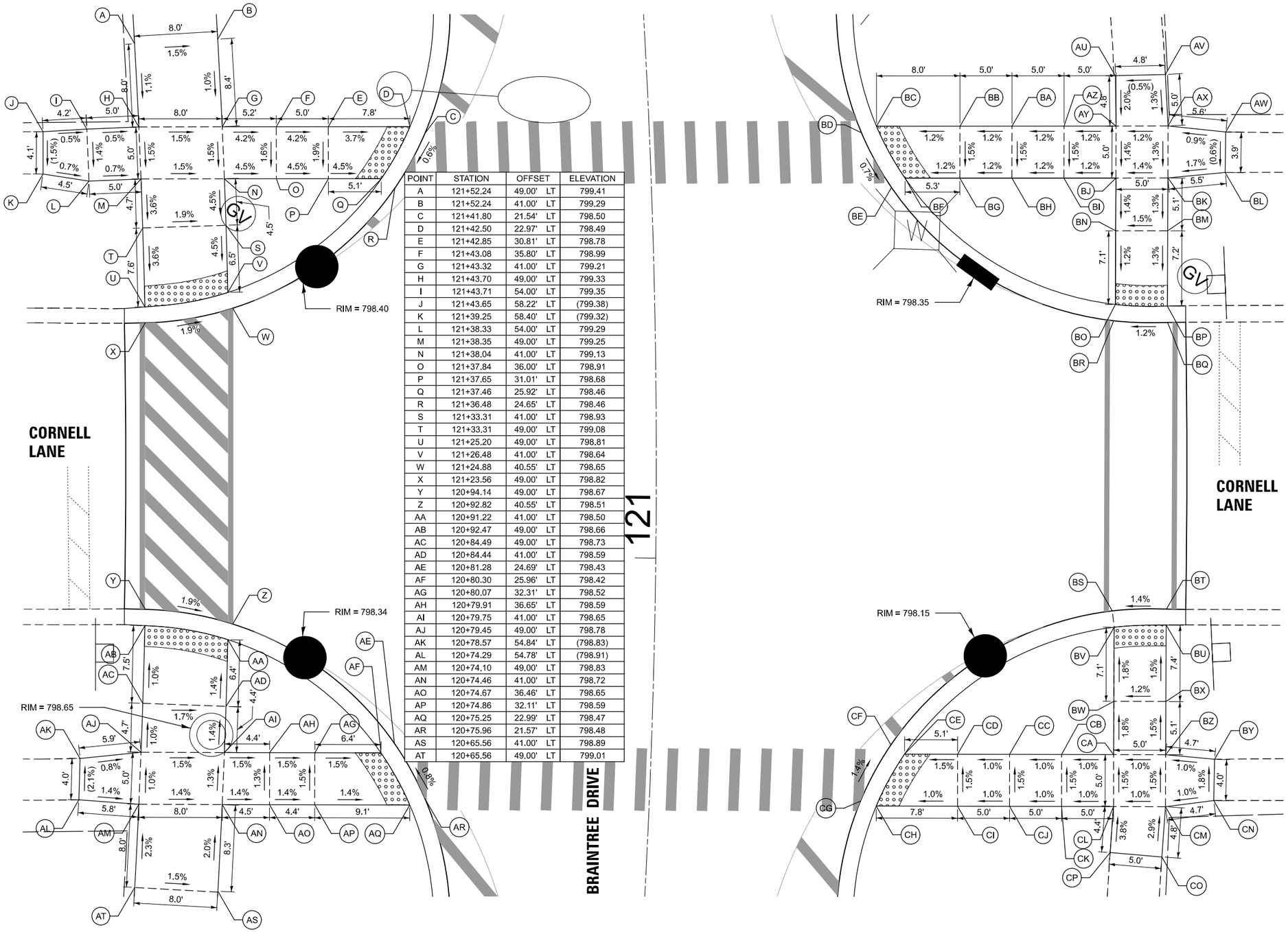

POINT	STATION	OFFSET	ELEVATION
A	121+52.24	49.00' LT	799.41
B	121+52.24	41.00' LT	799.29
C	121+41.80	21.54' LT	798.50
D	121+42.50	22.97' LT	798.49
E	121+42.85	30.81' LT	798.78
F	121+43.08	35.80' LT	798.99
G	121+43.32	41.00' LT	799.21
H	121+43.70	49.00' LT	799.33
I	121+43.71	54.00' LT	799.35
J	121+43.65	58.22' LT	(799.38)
K	121+39.25	58.40' LT	(799.32)
L	121+38.33	54.00' LT	799.29
M	121+38.35	49.00' LT	799.25
N	121+38.04	41.00' LT	799.13
O	121+37.84	36.00' LT	798.91
P	121+37.65	31.01' LT	798.68
Q	121+37.46	25.92' LT	798.46
R	121+36.48	24.65' LT	798.46
S	121+33.31	41.00' LT	798.93
T	121+33.31	49.00' LT	799.08
U	121+25.20	49.00' LT	798.81
V	121+26.48	41.00' LT	798.64
W	121+24.88	40.55' LT	798.65
X	121+23.56	49.00' LT	798.82
Y	120+94.14	49.00' LT	798.67
Z	120+92.82	40.55' LT	798.51
AA	120+91.22	41.00' LT	798.50
AB	120+92.47	49.00' LT	798.66
AC	120+84.49	49.00' LT	798.73
AD	120+84.44	41.00' LT	798.59
AE	120+81.28	24.69' LT	798.43
AF	120+80.30	25.96' LT	798.42
AG	120+80.07	32.31' LT	798.52
AH	120+79.91	36.65' LT	798.59
AI	120+79.75	41.00' LT	798.65
AJ	120+79.45	49.00' LT	798.78
AK	120+78.57	54.84' LT	(798.83)
AL	120+74.29	54.78' LT	(798.91)
AM	120+74.10	49.00' LT	798.83
AN	120+74.46	41.00' LT	798.72
AO	120+74.67	36.46' LT	798.65
AP	120+74.86	32.11' LT	798.59
AQ	120+75.25	22.99' LT	798.47
AR	120+75.96	21.57' LT	798.48
AS	120+65.56	41.00' LT	798.89
AT	120+65.56	49.00' LT	799.01

POINT	STATION	OFFSET	ELEVATION
AU	121+44.32	44.99' RT	(798.84)
AV	121+44.22	49.79' RT	(798.86)
AW	121+38.82	55.36' RT	(798.85)
AX	121+39.57	49.85' RT	798.80
AY	121+39.75	44.85' RT	798.74
AZ	121+39.94	39.86' RT	798.68
BA	121+40.13	34.86' RT	798.63
BB	121+40.32	29.86' RT	798.57
BC	121+40.63	21.84' RT	798.48
BD	121+40.09	20.36' RT	798.48
BE	121+34.86	23.06' RT	798.44
BF	121+35.68	24.39' RT	798.43
BG	121+35.51	29.65' RT	798.49
BH	121+35.35	34.65' RT	798.55
BI	121+35.19	39.65' RT	798.61
BJ	121+35.03	44.65' RT	798.67
BK	121+34.87	49.64' RT	798.74
BL	121+35.20	55.17' RT	(798.83)
BM	121+30.11	49.47' RT	798.67
BN	121+30.23	44.47' RT	798.61
BO	121+23.54	44.28' RT	798.52
BP	121+23.31	49.27' RT	798.58
BQ	121+21.82	49.27' RT	798.58
BR	121+22.06	44.07' RT	798.52
BS	120+95.68	43.94' RT	798.34
BT	120+95.93	49.15' RT	798.41
BU	120+94.48	49.15' RT	798.41
BV	120+94.20	44.15' RT	798.33
BW	120+87.46	44.29' RT	798.46
BX	120+87.58	49.29' RT	798.52
BY	120+82.51	54.14' RT	(798.64)
BZ	120+82.77	49.43' RT	798.60
CA	120+82.62	44.43' RT	798.55
CB	120+82.47	39.44' RT	798.50
CC	120+82.32	34.44' RT	798.45
CD	120+82.16	29.44' RT	798.40
CE	120+82.00	24.35' RT	798.32
CF	120+82.82	23.01' RT	798.32
CG	120+77.59	20.34' RT	798.41
CH	120+77.06	21.82' RT	798.40
CI	120+77.35	29.62' RT	798.48
CJ	120+77.53	34.62' RT	798.53
CK	120+77.72	39.61' RT	798.57
CL	120+77.90	44.61' RT	798.62
CM	120+78.08	49.60' RT	798.67
CN	120+78.80	54.21' RT	(798.72)
CO	120+73.53	49.46' RT	(798.81)
CP	120+73.71	44.46' RT	(798.79)

0 5 10 15
SCALE IN FEET

MODEL: ADA-4 [Sheet]
FILE NAME: c:\bms\dvlltech-pw\petro.kravets\d0140567\3993 ADA Curb Ramps.dgn

USER NAME = pk	DESIGNED - AMP	REVISED -	STATE OF ILLINOIS DEPARTMENT OF TRANSPORTATION
	DRAWN - AMP	REVISED -	
	CHECKED - PK	REVISED -	
PLOT DATE = 12/15/2025	DATE - 12/12/2025	REVISED -	

BRAINTREE DRIVE
ADA GRADING PLAN

SCALE: 1" = 5' | SHEET 4 OF 17 SHEETS | STA. | TO STA.

MUN RTE.	SECTION	COUNTY	TOTAL SHEETS	SHEET NO.
4029	23-00146-00-PV	COOK	315	135

CONTRACT NO. 61M26

ILLINOIS | FED. AID PROJECT

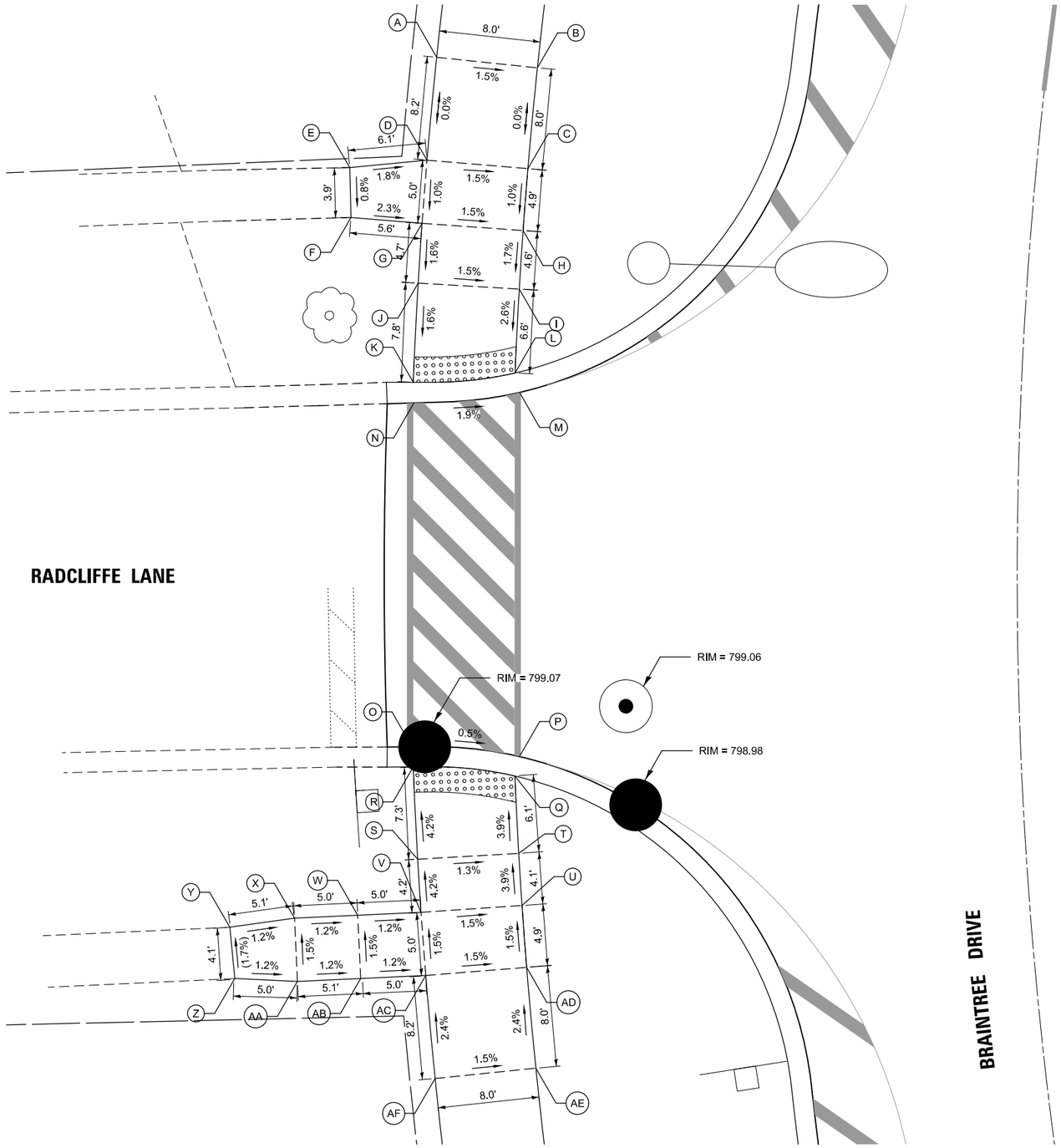

POINT	STATION	OFFSET	ELEVATION
A	126+88.23	48.00' LT	799.68
B	126+88.23	40.00' LT	799.56
C	126+81.07	40.00' LT	799.56
D	126+81.07	48.00' LT	799.68
E	126+80.12	54.03' LT	(799.79)
F	126+76.73	53.64' LT	(799.76)
G	126+76.68	48.00' LT	799.62
H	126+76.68	40.00' LT	799.51
I	126+72.53	40.00' LT	799.43
J	126+72.53	48.00' LT	799.55
K	126+65.65	48.00' LT	799.42
L	126+66.58	40.00' LT	799.26
M	126+65.22	39.58' LT	799.26
N	126+64.22	47.89' LT	799.43
O	126+40.37	47.95' LT	799.07
P	126+39.43	39.58' LT	799.03
Q	126+38.06	40.00' LT	799.02
R	126+38.98	48.00' LT	799.06
S	126+32.58	48.00' LT	799.36
T	126+32.58	40.00' LT	799.26
U	126+28.88	40.00' LT	799.42
V	126+28.88	48.00' LT	799.54
W	126+28.98	53.00' LT	799.60
X	126+29.07	58.00' LT	799.66
Y	126+28.76	63.14' LT	(799.72)
Z	126+25.32	63.05' LT	(799.79)
AA	126+24.79	58.14' LT	799.73
AB	126+24.65	53.14' LT	799.67
AC	126+24.50	48.00' LT	799.61
AD	126+24.50	40.00' LT	799.49
AE	126+17.33	40.00' LT	799.81
AF	126+17.33	48.00' LT	799.69

N

0 5 10 15
SCALE IN FEET

MODEL: ADA-5 [Sheet]
FILE NAME: c:\bms\dvitech-pw\petro.kravets\d0140567\3993 ADA Curb Ramps.dgn

USER NAME = pk	DESIGNED - AMP	REVISED -	
	DRAWN - AMP	REVISED -	
	CHECKED - PK	REVISED -	
PLOT DATE = 12/15/2025	DATE - 12/12/2025	REVISED -	

STATE OF ILLINOIS
DEPARTMENT OF TRANSPORTATION

BRAINTREE DRIVE
ADA GRADING PLAN

SCALE: 1" = 5' | SHEET 5 OF 17 SHEETS | STA. | TO STA.

MUN RTE.	SECTION	COUNTY	TOTAL SHEETS	SHEET NO.
4029	23-00146-00-PV	COOK	315	136

CONTRACT NO. 61M26

ILLINOIS | FED. AID PROJECT

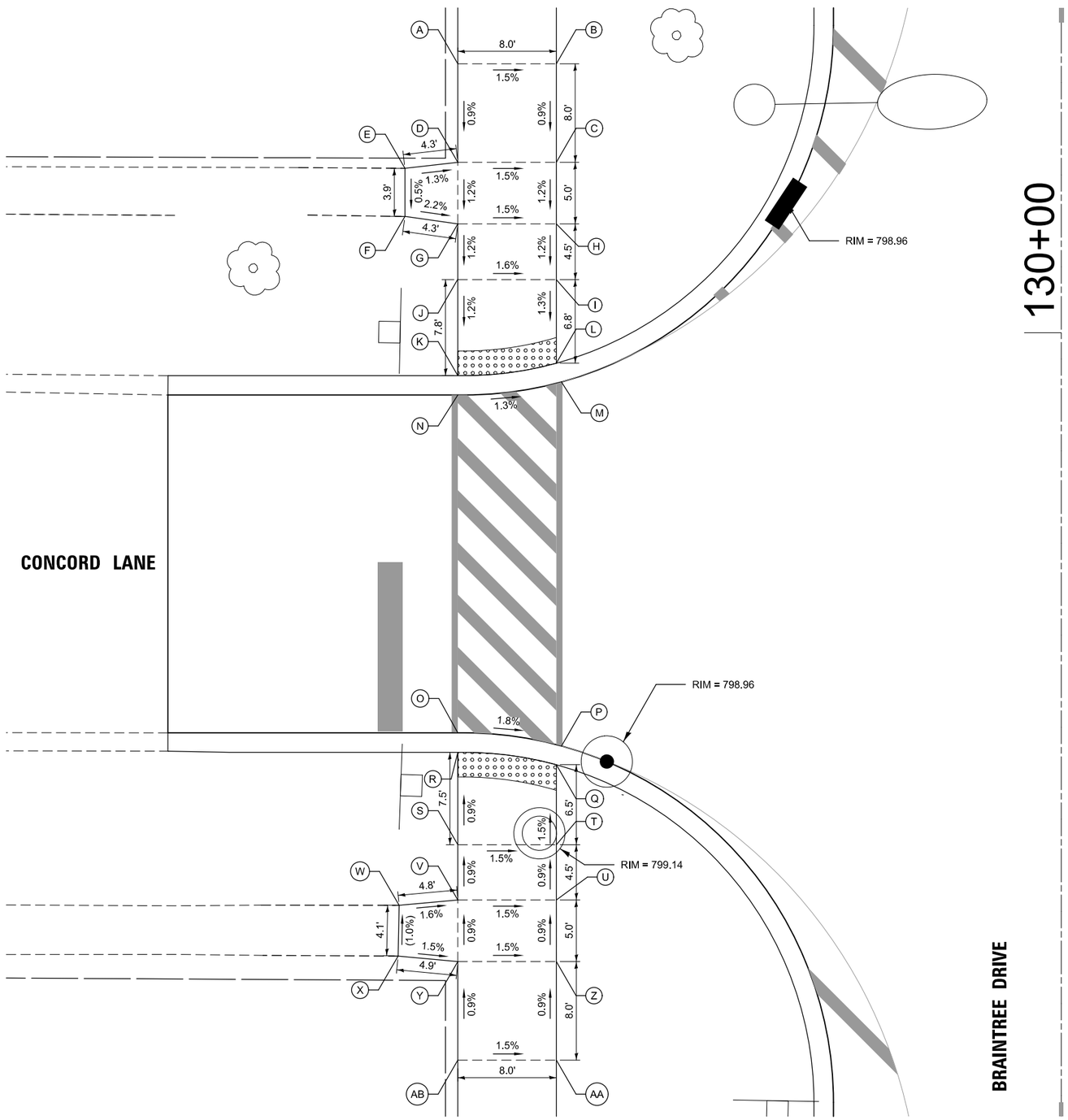

POINT	STATION	OFFSET	ELEVATION
A	130+21.84	49.00' LT	799.67
B	130+21.84	41.00' LT	799.55
C	130+13.84	41.00' LT	799.48
D	130+13.84	49.00' LT	799.60
E	130+13.35	53.29' LT	(799.65)
F	130+09.44	53.29' LT	(799.63)
G	130+08.84	49.00' LT	799.54
H	130+08.84	41.00' LT	799.42
I	130+04.31	41.00' LT	799.36
J	130+04.31	49.00' LT	799.48
K	129+96.52	49.00' LT	799.39
L	129+97.53	41.00' LT	799.27
M	129+96.01	40.58' LT	799.28
N	129+94.95	49.03' LT	799.40
O	129+67.52	49.00' LT	799.18
P	129+66.45	40.58' LT	799.03
Q	129+64.93	41.00' LT	799.02
R	129+65.94	49.00' LT	799.17
S	129+58.44	49.00' LT	799.24
T	129+58.44	41.00' LT	799.12
U	129+53.94	41.00' LT	799.16
V	129+53.94	49.00' LT	799.28
W	129+53.52	53.77' LT	(799.35)
X	129+49.40	53.85' LT	(799.39)
Y	129+48.94	49.00' LT	799.32
Z	129+48.94	41.00' LT	799.20
AA	129+40.94	41.00' LT	799.27
AB	129+40.94	49.00' LT	799.39

0 5 10 15
SCALE IN FEET

MODEL: ADA-6 [Sheet]
FILE NAME: c:\bms\dvltech-pw\petro.kravets\d0140567\3993 ADA Curb Ramps.dgn

USER NAME = pk	DESIGNED - AMP	REVISED -	
	DRAWN - AMP	REVISED -	
	CHECKED - PK	REVISED -	
PLOT DATE = 12/15/2025	DATE - 12/12/2025	REVISED -	

STATE OF ILLINOIS
DEPARTMENT OF TRANSPORTATION

BRAINTREE DRIVE
ADA GRADING PLAN

SCALE: 1" = 5' | SHEET 6 OF 17 SHEETS | STA. TO STA.

MUN RTE.	SECTION	COUNTY	TOTAL SHEETS	SHEET NO.
4029	23-00146-00-PV	COOK	315	137

CONTRACT NO. 61M26

ILLINOIS | FED. AID PROJECT

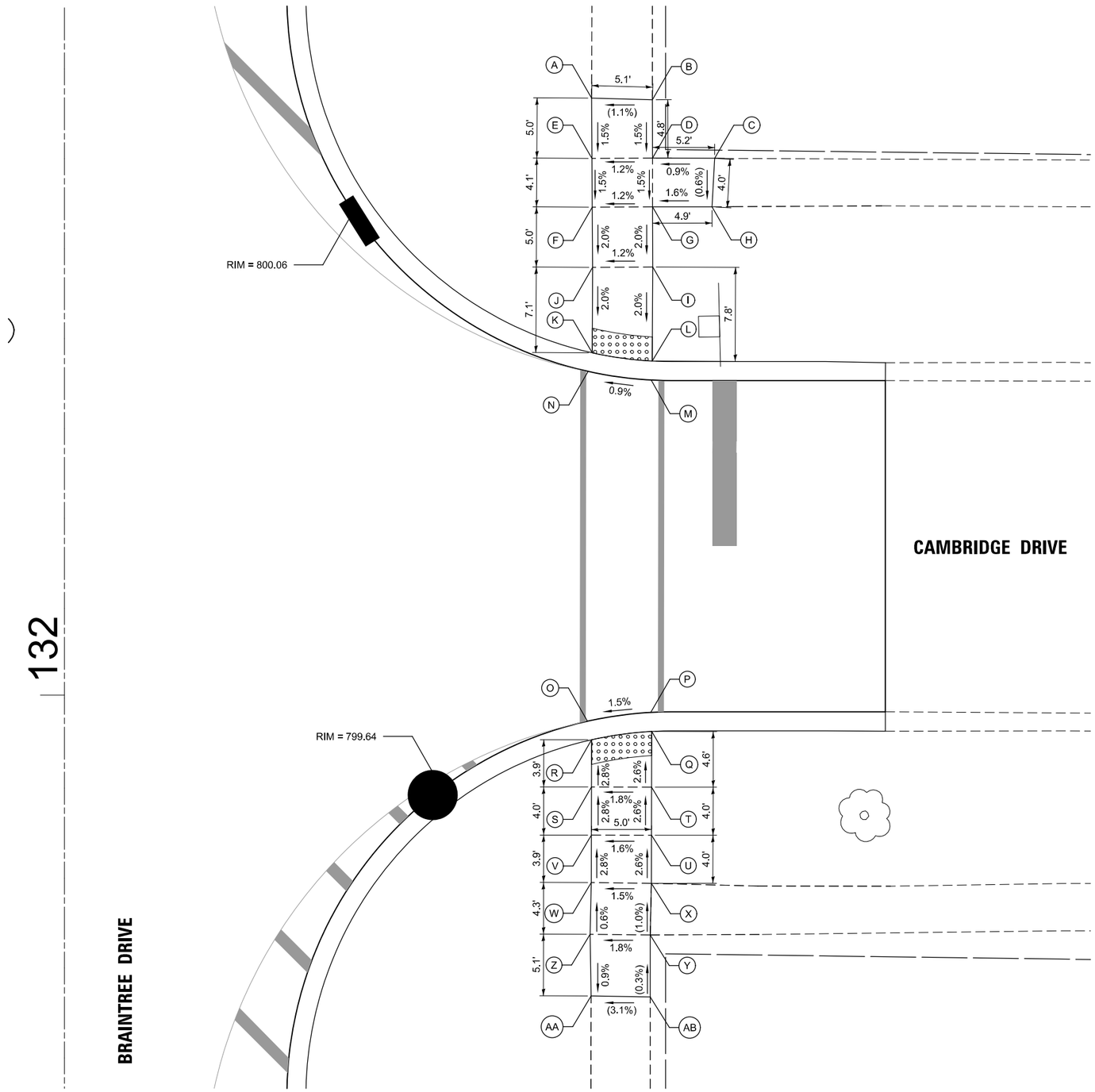

POINT	STATION	OFFSET	ELEVATION
A	132+49.63	43.84' RT	(800.64)
B	132+49.50	48.90' RT	(800.70)
C	132+44.63	54.08' RT	(800.67)
D	132+44.65	48.91' RT	800.62
E	132+44.62	43.87' RT	800.57
F	132+40.56	43.90' RT	800.51
G	132+40.59	48.92' RT	800.56
H	132+40.60	53.86' RT	(800.64)
I	132+35.59	48.93' RT	800.46
J	132+35.56	43.92' RT	800.41
K	132+28.45	43.89' RT	800.26
L	132+27.77	48.89' RT	800.31
M	132+26.19	48.80' RT	800.32
N	132+26.91	43.55' RT	800.27
O	131+97.82	43.49' RT	799.86
P	131+98.55	48.75' RT	799.94
Q	131+96.97	48.84' RT	799.93
R	131+96.28	43.84' RT	799.85
S	131+92.35	43.83' RT	799.96
T	131+92.35	48.83' RT	800.05
U	131+88.35	48.83' RT	800.15
V	131+88.35	43.83' RT	800.07
W	131+84.41	43.82' RT	800.18
X	131+84.35	48.82' RT	(800.26)
Y	131+80.05	48.71' RT	(800.30)
Z	131+80.11	43.71' RT	800.21
AA	131+74.99	43.81' RT	(800.16)
AB	131+74.89	48.72' RT	(800.31)

0 5 10 15
SCALE IN FEET

MODEL: ADA-7 [Sheet]
FILE NAME: c:\bms\civiltech-pw\petro.kravets\d0140567\3993 ADA Curb Ramps.dgn

USER NAME = pk	DESIGNED - AMP	REVISED -	
	DRAWN - AMP	REVISED -	
	CHECKED - PK	REVISED -	
PLOT DATE = 12/15/2025	DATE - 12/12/2025	REVISED -	

STATE OF ILLINOIS
DEPARTMENT OF TRANSPORTATION

BRAINTREE DRIVE
ADA GRADING PLAN

SCALE: 1" = 5' | SHEET 7 OF 17 SHEETS | STA. | TO STA.

MUN RTE.	SECTION	COUNTY	TOTAL SHEETS	SHEET NO.
4029	23-00146-00-PV	COOK	315	138

CONTRACT NO. 61M26

ILLINOIS | FED. AID PROJECT

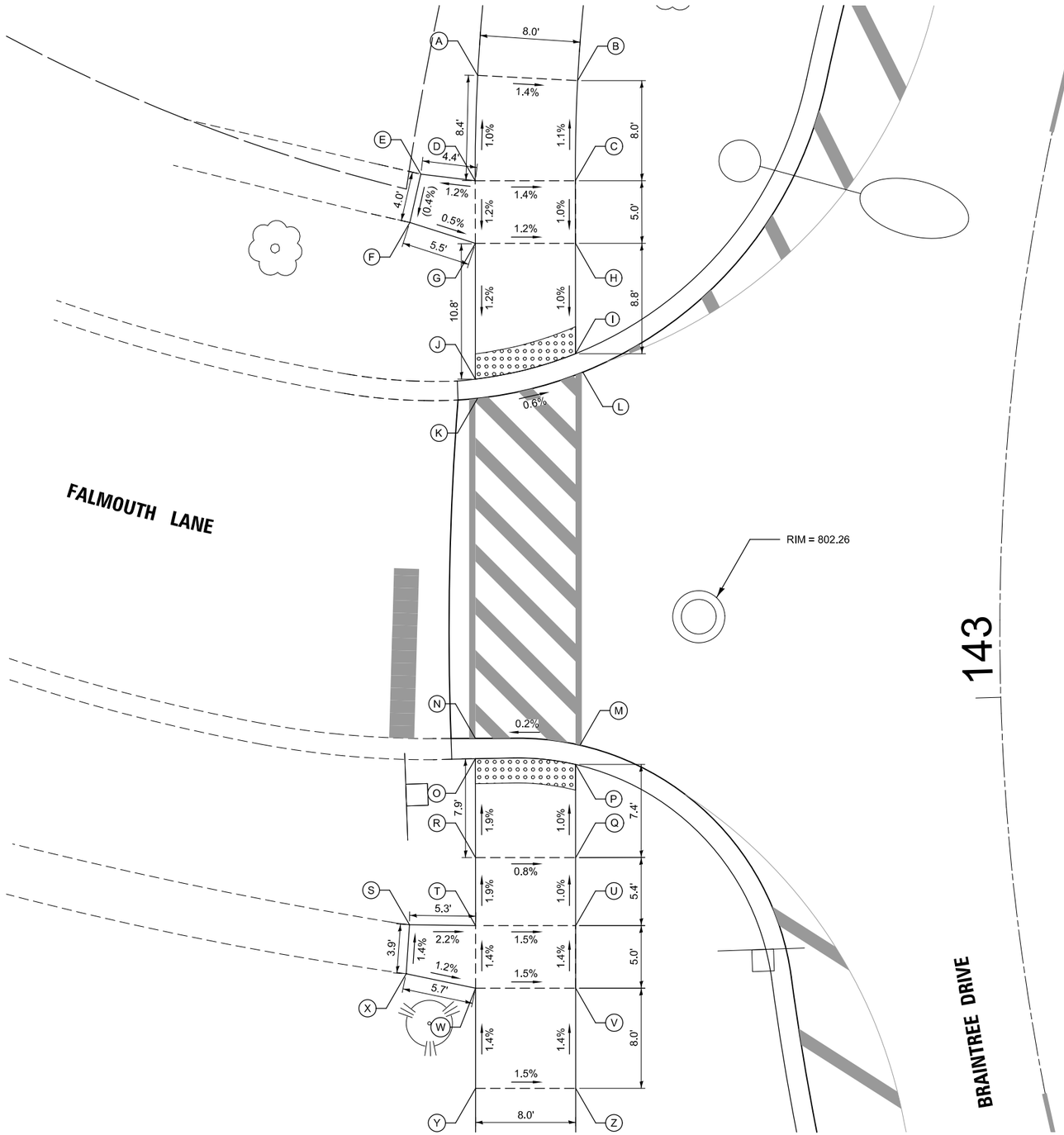

POINT	STATION	OFFSET	ELEVATION
A	143+41.31	45.89' LT	802.20
B	143+42.21	37.97' LT	802.09
C	143+35.60	36.75' LT	802.18
D	143+34.57	44.65' LT	802.29
E	143+34.46	49.03' LT	(802.24)
F	143+31.33	49.35' LT	(802.25)
G	143+30.56	43.94' LT	802.23
H	143+31.44	36.01' LT	802.13
I	143+24.06	34.98' LT	802.04
J	143+21.77	42.76' LT	802.09
K	143+20.53	42.47' LT	802.10
L	143+22.87	34.26' LT	802.05
M	142+97.56	33.73' LT	802.29
N	142+98.28	42.06' LT	802.28
O	142+96.95	42.12' LT	802.27
P	142+96.26	34.15' LT	802.28
Q	142+89.97	34.62' LT	802.36
R	142+90.50	42.60' LT	802.42
S	142+86.56	48.32' LT	(802.65)
T	142+86.08	43.08' LT	802.53
U	142+85.40	35.13' LT	802.41
V	142+81.21	35.70' LT	802.48
W	142+82.03	43.64' LT	802.60
X	142+83.48	49.00' LT	(802.67)
Y	142+75.59	44.75' LT	802.71
Z	142+74.55	36.85' LT	802.59

0 5 10 15
SCALE IN FEET

MODEL: ADA-8 [Sheet]
FILE NAME: c:\bms\dvlltech-pw\petro.kravets\d0140567\3993 ADA Curb Ramps.dgn

USER NAME = pk	DESIGNED - AMP	REVISED -	
	DRAWN - AMP	REVISED -	
	CHECKED - PK	REVISED -	
PLOT DATE = 12/15/2025	DATE - 12/12/2025	REVISED -	

STATE OF ILLINOIS
DEPARTMENT OF TRANSPORTATION

BRAINTREE DRIVE
ADA GRADING PLAN

SCALE: 1" = 5' | SHEET 8 OF 17 SHEETS | STA. | TO STA.

MUN RTE.	SECTION	COUNTY	TOTAL SHEETS	SHEET NO.
4029	23-00146-00-PV	COOK	315	139

CONTRACT NO. 61M26

ILLINOIS | FED. AID PROJECT

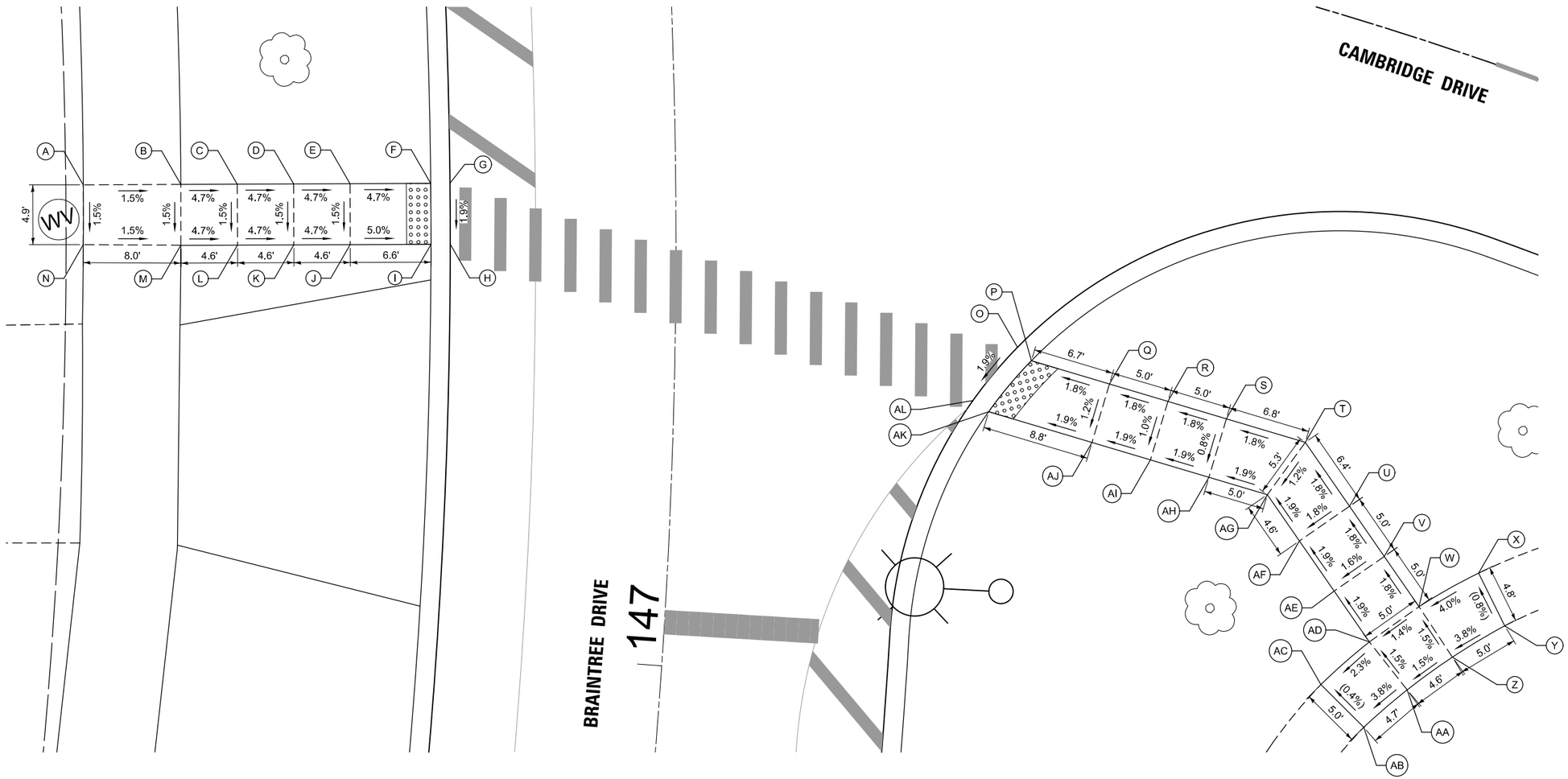

POINT	STATION	OFFSET	ELEVATION
A	147+39.92	48.56' LT	806.74
B	147+39.88	40.56' LT	806.62
C	147+39.86	35.94' LT	806.40
D	147+39.83	31.32' LT	806.18
E	147+39.81	26.70' LT	805.97
F	147+39.77	20.08' LT	805.66
G	147+39.77	18.50' LT	805.67
H	147+34.57	18.50' LT	805.57
I	147+34.57	20.08' LT	805.56
J	147+34.54	26.70' LT	805.89
K	147+34.52	31.32' LT	806.11
L	147+34.50	35.94' LT	806.33
M	147+34.48	40.59' LT	806.54
N	147+34.52	48.59' LT	806.66
O	147+26.58	28.08' RT	805.10
P	147+25.55	29.23' RT	805.09
Q	147+23.88	35.66' RT	805.21
R	147+22.64	40.52' RT	805.30
S	147+21.44	45.31' RT	805.38
T	147+19.84	51.84' RT	805.50
U	147+15.19	55.64' RT	805.61
V	147+11.60	58.65' RT	805.70
W	147+08.04	61.69' RT	805.79
X	147+10.69	66.45' RT	(806.01)
Y	147+06.97	68.79' RT	(806.05)
Z	147+04.49	64.66' RT	805.87
AA	147+01.89	61.11' RT	805.80
AB	146+98.94	57.77' RT	(805.62)
AC	147+01.88	54.04' RT	(805.60)
AD	147+05.24	57.78' RT	805.72
AE	147+08.86	54.68' RT	805.62
AF	147+12.47	51.65' RT	805.53
AG	147+15.83	48.87' RT	805.44
AH	147+16.99	44.03' RT	805.34
AI	147+18.16	39.19' RT	805.25
AJ	147+19.35	34.36' RT	805.15
AK	147+21.52	25.82' RT	804.98
AL	147+22.36	24.51' RT	804.99

0 5 10 15
SCALE IN FEET

MODEL: ADA-9 [Sheet]
FILE NAME: c:\bms\dvltech-pw\petro.kravets\d0140567\3993 ADA Curb Ramps.dgn

USER NAME = pk	DESIGNED - AMP	REVISED -	
	DRAWN - AMP	REVISED -	
	CHECKED - PK	REVISED -	
PLOT DATE = 12/15/2025	DATE - 12/12/2025	REVISED -	

STATE OF ILLINOIS
DEPARTMENT OF TRANSPORTATION

BRAINTREE DRIVE
ADA GRADING PLAN

SCALE: 1" = 5' | SHEET 9 OF 17 SHEETS | STA. | TO STA.

MUN RTE.	SECTION	COUNTY	TOTAL SHEETS	SHEET NO.
4029	23-00146-00-PV	COOK	315	140

CONTRACT NO. 61M26

ILLINOIS | FED. AID PROJECT

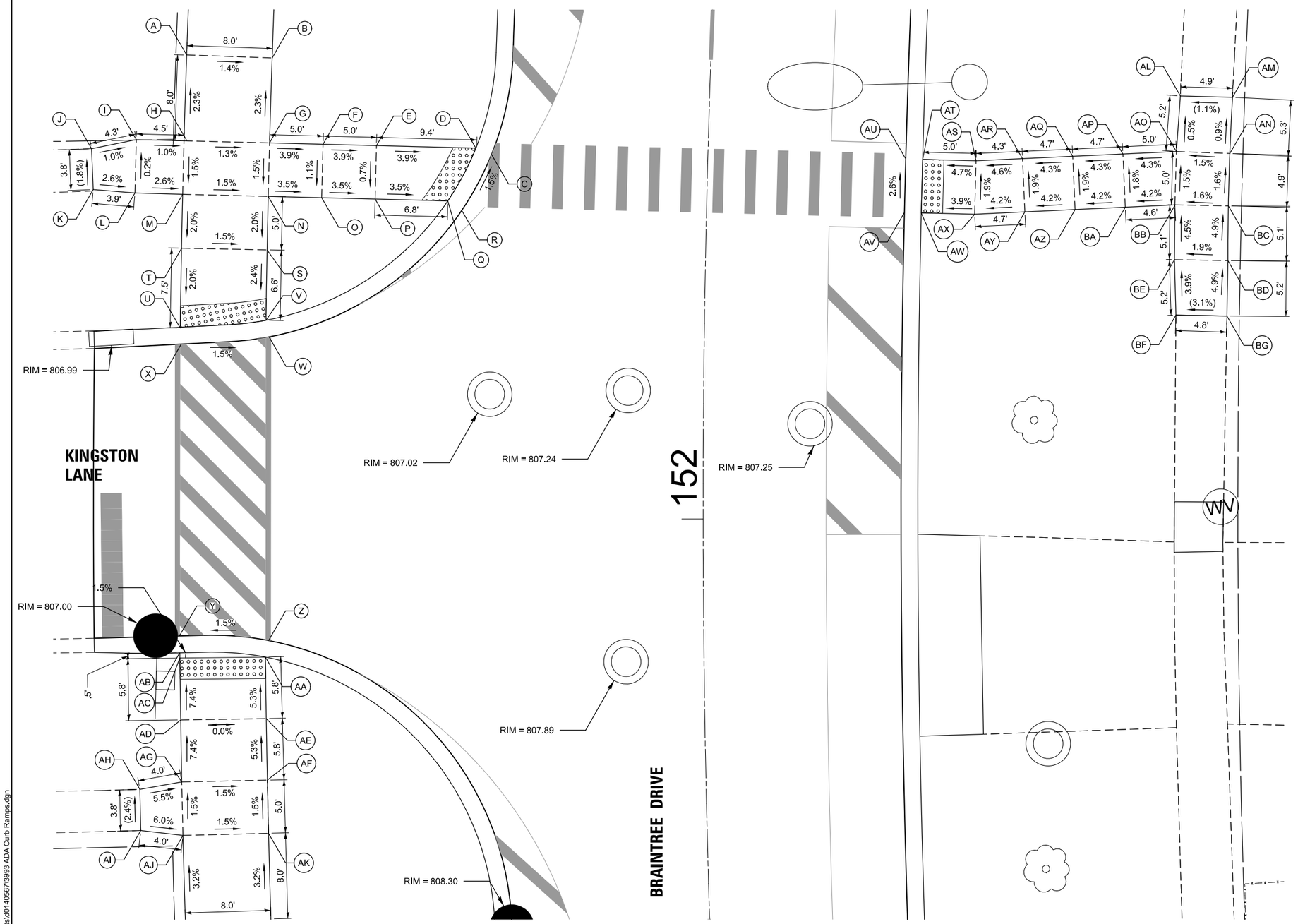

POINT	STATION	OFFSET	ELEVATION
A	152+41.73	49.00' LT	807.01
B	152+41.73	41.00' LT	806.90
C	152+33.54	20.22' LT	806.34
D	152+34.08	21.70' LT	806.33
E	152+34.06	31.00' LT	806.70
F	152+34.05	36.00' LT	806.89
G	152+34.04	41.00' LT	807.19
H	152+34.03	49.00' LT	807.09
I	152+34.02	53.46' LT	807.24
J	152+33.10	57.62' LT	(807.28)
K	152+29.45	57.37' LT	(807.35)
L	152+29.23	53.46' LT	807.25
M	152+29.22	49.00' LT	807.13
N	152+29.20	41.00' LT	807.01
O	152+29.19	36.00' LT	806.84
P	152+29.18	31.00' LT	806.66
Q	152+29.17	24.20' LT	806.42
R	152+28.33	22.87' LT	806.43
S	152+24.37	41.00' LT	806.91
T	152+24.37	49.00' LT	807.03
U	152+17.19	49.00' LT	806.88
V	152+18.00	41.00' LT	806.76
W	152+16.50	40.69' LT	806.77
X	152+15.74	48.90' LT	806.89
Y	151+89.57	49.00' LT	807.03
Z	151+89.04	40.69' LT	807.16
AA	151+87.54	41.00' LT	807.15
AB	151+88.02	49.00' LT	807.03
AC	151+87.54	49.00' LT	807.03
AD	151+81.97	49.00' LT	807.46
AE	151+81.97	41.00' LT	807.46
AF	151+76.41	41.00' LT	807.77
AG	151+76.41	49.00' LT	807.89
AH	151+75.82	52.94' LT	(808.11)
AI	151+72.13	52.94' LT	(808.20)
AJ	151+71.60	49.00' LT	807.96
AK	151+71.60	41.00' LT	807.84
AL	152+40.99	43.99' RT	(807.44)
AM	152+41.03	48.87' RT	(807.49)
AN	152+35.55	48.78' RT	807.54
AO	152+35.60	43.78' RT	807.46
AP	152+35.21	38.78' RT	807.25
AQ	152+34.86	34.10' RT	807.05
AR	152+34.50	29.41' RT	806.85
AS	152+34.18	25.08' RT	806.65
AT	152+34.16	20.08' RT	806.42
AU	152+34.16	18.50' RT	806.42
AV	152+29.08	18.50' RT	806.56
AW	152+29.08	20.08' RT	806.55
AX	152+29.07	25.08' RT	806.75
AY	152+29.40	29.77' RT	807.94
AZ	152+29.74	34.46' RT	807.14
BA	152+30.08	39.14' RT	807.34
BB	152+30.42	43.80' RT	807.54
BC	152+30.45	48.77' RT	807.62
BD	152+25.12	48.84' RT	807.87
BE	152+25.11	43.84' RT	807.77
BF	152+19.73	44.07' RT	(807.97)
BG	152+19.73	48.84' RT	(808.12)

0 5 10 15
SCALE IN FEET

MODEL: ADA-10 [Sheet]
FILE NAME: c:\bms\civiltech-pw\petro.kravets\d0140567\3993 ADA Curb Ramps.dgn

USER NAME = pk	DESIGNED - AMP	REVISED -	
	DRAWN - AMP	REVISED -	
	CHECKED - PK	REVISED -	
PLOT DATE = 12/11/2025	DATE - 12/12/2025	REVISED -	

STATE OF ILLINOIS
DEPARTMENT OF TRANSPORTATION

BRAINTREE DRIVE
ADA GRADING PLAN

SCALE: 1" = 5' | SHEET 10 OF 17 SHEETS | STA. | TO STA.

MUN RTE.	SECTION	COUNTY	TOTAL SHEETS	SHEET NO.
4029	23-00146-00-PV	COOK	315	141

CONTRACT NO. 61M26

ILLINOIS | FED. AID PROJECT

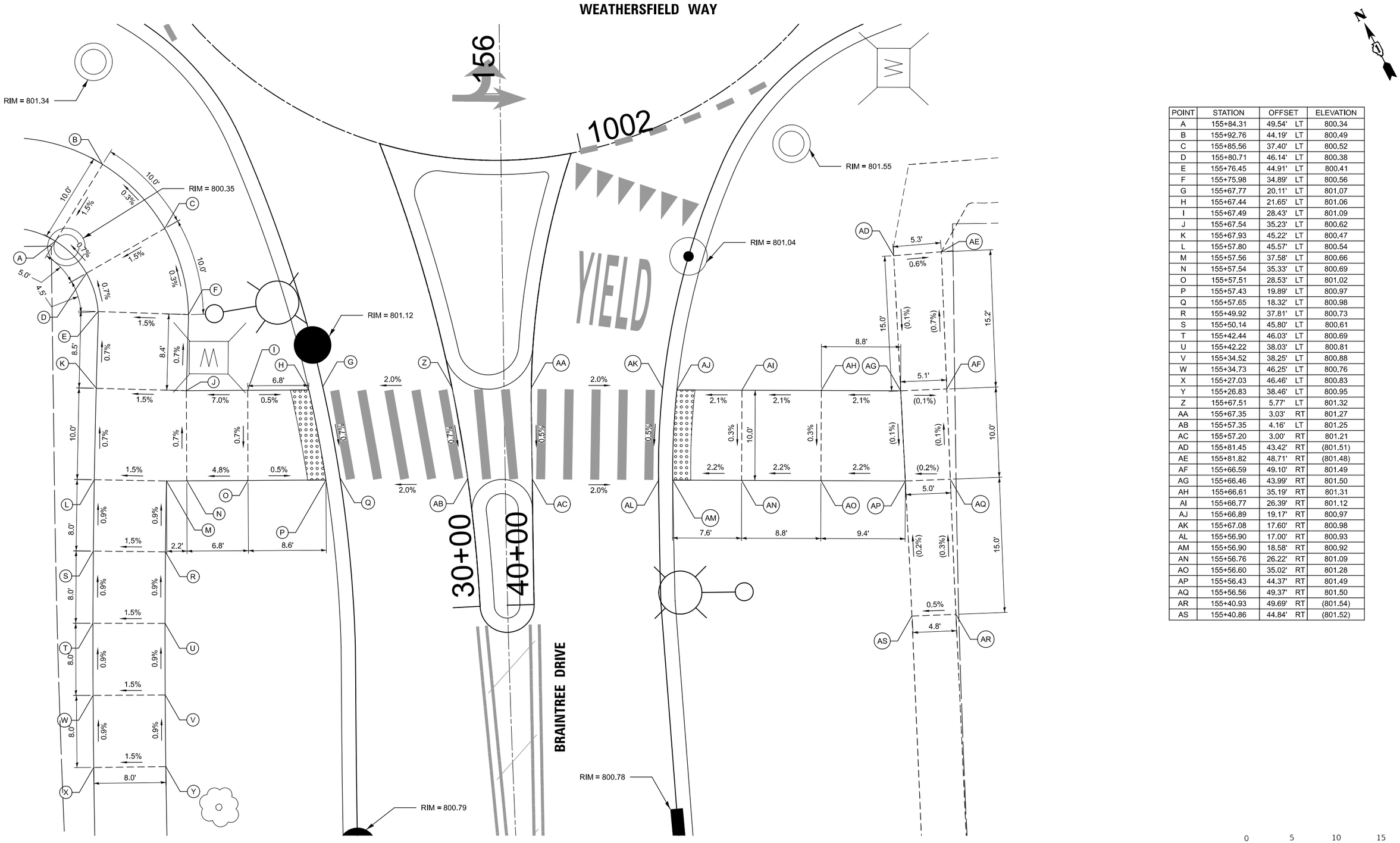

POINT	STATION	OFFSET	ELEVATION
A	155+84.31	49.54' LT	800.34
B	155+92.76	44.19' LT	800.49
C	155+85.56	37.40' LT	800.52
D	155+80.71	46.14' LT	800.38
E	155+76.45	44.91' LT	800.41
F	155+75.98	34.89' LT	800.56
G	155+67.77	20.11' LT	801.07
H	155+67.44	21.65' LT	801.06
I	155+67.49	28.43' LT	801.09
J	155+67.54	35.23' LT	800.62
K	155+67.93	45.22' LT	800.47
L	155+57.80	45.57' LT	800.54
M	155+57.56	37.58' LT	800.66
N	155+57.54	35.33' LT	800.69
O	155+57.51	28.53' LT	801.02
P	155+57.43	19.89' LT	800.97
Q	155+57.65	18.32' LT	800.98
R	155+49.92	37.81' LT	800.73
S	155+50.14	45.80' LT	800.61
T	155+42.44	46.03' LT	800.69
U	155+42.22	38.03' LT	800.81
V	155+34.52	38.25' LT	800.88
W	155+34.73	46.25' LT	800.76
X	155+27.03	46.46' LT	800.83
Y	155+26.83	38.46' LT	800.95
Z	155+67.51	5.77' LT	801.32
AA	155+67.35	3.03' RT	801.27
AB	155+57.35	4.16' LT	801.25
AC	155+57.20	3.00' RT	801.21
AD	155+81.45	43.42' RT	(801.51)
AE	155+81.82	48.71' RT	(801.48)
AF	155+66.59	49.10' RT	801.49
AG	155+66.46	43.99' RT	801.50
AH	155+66.61	35.19' RT	801.31
AI	155+66.77	26.39' RT	801.12
AJ	155+66.89	19.17' RT	800.97
AK	155+67.08	17.60' RT	800.98
AL	155+56.90	17.00' RT	800.93
AM	155+56.90	18.58' RT	800.92
AN	155+56.76	26.22' RT	801.09
AO	155+56.60	35.02' RT	801.28
AP	155+56.43	44.37' RT	801.49
AQ	155+56.56	49.37' RT	801.50
AR	155+40.93	49.69' RT	(801.54)
AS	155+40.86	44.84' RT	(801.52)

SOUTH LEG OF ROUNDABOUT

MODEL: ADA-11 [Sheet]
FILE NAME: c:\bms\civiltech-pw\petro.kravets\d0140567\3993.ADA Curb Ramps.dgn

USER NAME = pk	DESIGNED - AMP	REVISED -	
	DRAWN - AMP	REVISED -	
	CHECKED - PK	REVISED -	
PLOT DATE = 12/15/2025	DATE - 12/12/2025	REVISED -	

STATE OF ILLINOIS
DEPARTMENT OF TRANSPORTATION

BRAINTREE DRIVE
ADA GRADING PLAN

SCALE: 1" = 5' | SHEET 11 OF 17 SHEETS | STA. | TO STA.

MUN RTE.	SECTION	COUNTY	TOTAL SHEETS	SHEET NO.
4029	23-00146-00-PV	COOK	315	142

CONTRACT NO. 61M26

ILLINOIS | FED. AID PROJECT

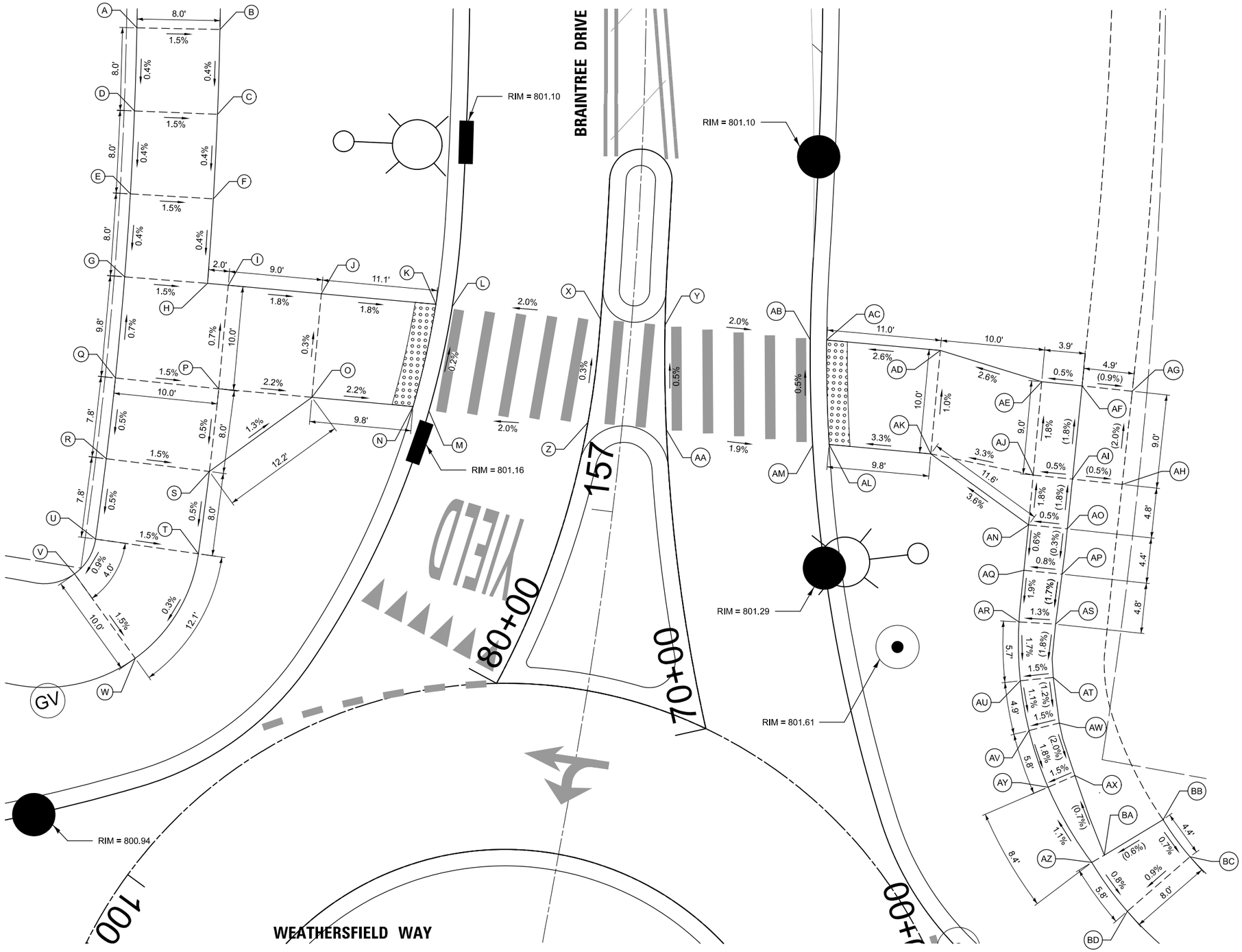

NORTH LEG OF ROUNDABOUT

POINT	STATION	OFFSET	ELEVATION
A	157+45.78	49.00' LT	801.74
B	157+45.78	41.00' LT	801.62
C	157+36.81	41.00' LT	801.58
D	157+36.81	49.00' LT	801.70
E	157+27.83	49.00' LT	801.67
F	157+27.83	41.00' LT	801.55
G	157+18.85	49.00' LT	801.64
H	157+18.85	41.00' LT	801.52
I	157+18.82	39.00' LT	801.49
J	157+18.71	30.00' LT	801.33
K	157+18.57	18.91' LT	801.12
L	157+18.44	17.34' LT	801.13
M	157+07.82	18.66' LT	801.15
N	157+08.12	20.21' LT	801.14
O	157+07.99	30.00' LT	801.36
P	157+07.88	39.00' LT	801.56
Q	157+07.88	49.00' LT	801.71
R	156+99.09	49.00' LT	801.67
S	156+99.09	39.00' LT	801.52
T	156+90.34	39.00' LT	801.47
U	156+90.34	49.00' LT	801.62
V	156+86.28	50.52' LT	801.59
W	156+78.37	43.46' LT	801.44
X	157+18.38	3.00' LT	801.42
Y	157+18.31	3.23' RT	801.45
Z	157+08.31	3.31' LT	801.45
AA	157+08.40	4.27' RT	801.49
AB	157+18.04	17.28' RT	801.17
AC	157+18.15	18.85' RT	801.16
AD	157+18.04	29.84' RT	801.45
AE	157+16.00	39.82' RT	801.72
AF	157+15.94	43.73' RT	(801.74)
AG	157+15.84	48.58' RT	(801.70)
AH	157+07.70	48.47' RT	(801.87)
AI	157+07.72	43.65' RT	(801.90)
AJ	157+07.71	39.85' RT	801.88
AK	157+08.66	29.84' RT	801.55
AL	157+08.56	20.00' RT	801.22
AM	157+08.32	18.44' RT	801.23
AN	157+03.29	39.94' RT	801.97
AO	157+03.33	43.68' RT	(801.99)
AP	156+99.32	43.69' RT	(801.97)
AQ	156+99.25	40.00' RT	801.94
AR	156+94.66	40.16' RT	801.85
AS	156+94.90	43.67' RT	(801.89)
AT	156+90.24	44.16' RT	(801.80)
AU	156+89.53	41.07' RT	801.75
AV	156+85.31	42.61' RT	801.70
AW	156+86.36	45.38' RT	(801.74)
AX	156+82.04	47.64' RT	(801.64)
AY	156+80.67	45.28' RT	801.60
AZ	156+74.86	50.66' RT	801.69
BA	156+75.67	51.73' RT	(801.70)
BB	156+79.53	56.72' RT	(801.74)
BC	156+76.80	59.87' RT	801.71
BD	156+70.97	54.86' RT	801.64

0 5 10 15
SCALE IN FEET

MODEL: ADA-12 [Sheet]
FILE NAME: c:\bms\dvitech-pw\petro.kravets\d0140567\3993 ADA Curb Ramps.dgn

USER NAME = pk	DESIGNED - AMP	REVISED -	
	DRAWN - AMP	REVISED -	
	CHECKED - PK	REVISED -	
PLOT DATE = 12/15/2025	DATE - 12/12/2025	REVISED -	

STATE OF ILLINOIS
DEPARTMENT OF TRANSPORTATION

BRAINTREE DRIVE
ADA GRADING PLAN

SCALE: 1" = 5' | SHEET 12 OF 17 SHEETS | STA. | TO STA.

MUN RTE.	SECTION	COUNTY	TOTAL SHEETS	SHEET NO.
4029	23-00146-00-PV	COOK	315	143

CONTRACT NO. 61M26

ILLINOIS | FED. AID PROJECT

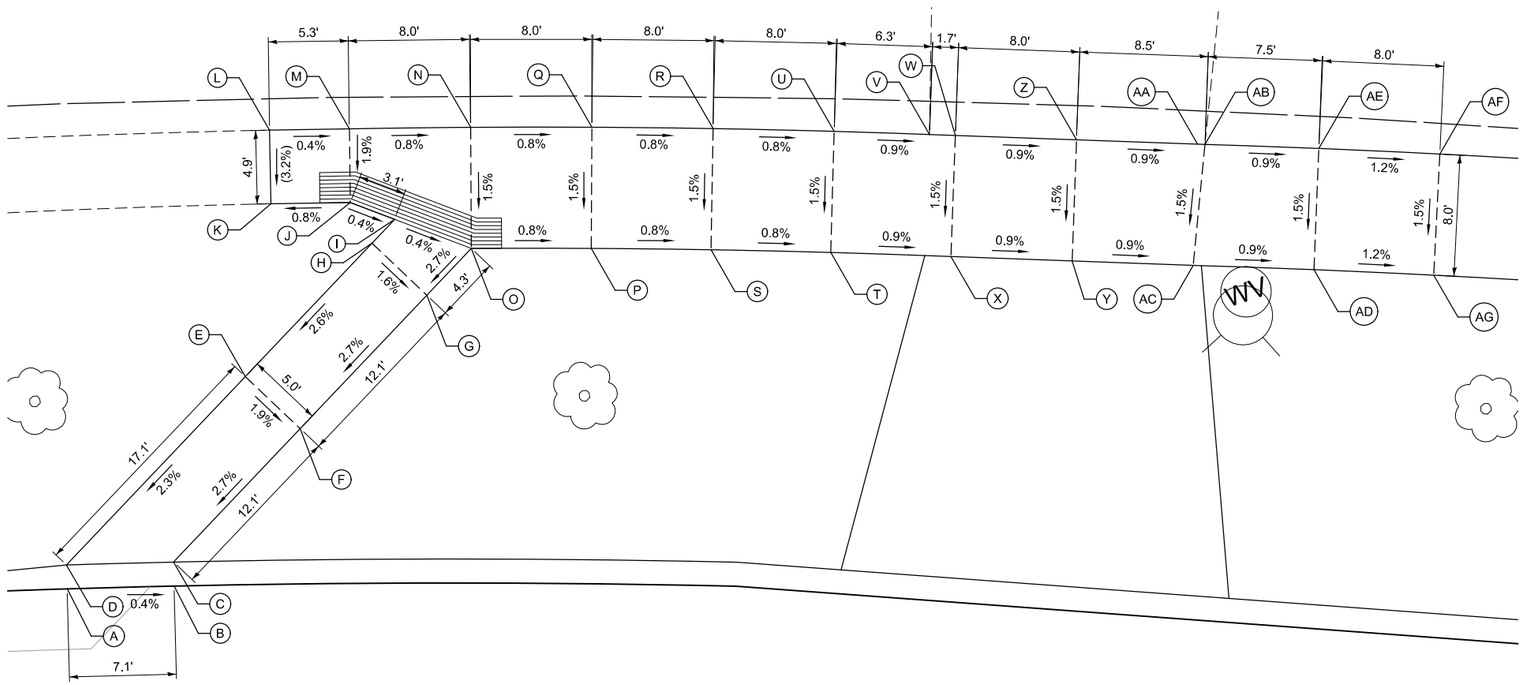

POINT	STATION	OFFSET	ELEVATION
A	400+95.06	19.06' LT	801.97
B	401+01.98	19.03' LT	801.94
C	401+01.99	20.61' LT	801.93
D	400+95.07	20.64' LT	801.96
E	401+06.88	32.74' LT	802.36
F	401+10.32	29.23' LT	802.26
G	401+18.51	37.92' LT	802.59
H	401+15.07	41.40' LT	802.67
I	401+16.52	42.96' LT	802.73
J	401+13.74	44.10' LT	802.74
K	401+08.73	44.10' LT	(802.70)
L	401+08.72	48.96' LT	(802.86)
M	401+13.74	48.97' LT	802.84
N	401+21.35	48.99' LT	802.83
O	401+21.35	40.99' LT	802.71
P	401+28.93	40.97' LT	802.73
Q	401+28.96	48.97' LT	802.82
R	401+36.56	48.93' LT	802.82
S	401+36.51	40.93' LT	802.71
T	401+44.09	40.86' LT	802.69
U	401+44.17	48.86' LT	802.81
V	401+50.16	48.78' LT	(802.75)
W	401+51.78	48.76' LT	(802.74)
X	401+51.70	40.76' LT	802.62
Y	401+59.37	40.71' LT	802.54
Z	401+59.39	48.71' LT	(802.66)
AA	401+67.00	48.72' LT	(802.59)
AB	401+67.46	48.72' LT	(802.59)
AC	401+67.04	40.72' LT	802.47
AD	401+74.68	40.80' LT	802.40
AE	401+74.61	48.80' LT	802.52
AF	401+82.22	48.87' LT	802.42
AG	401+82.27	40.87' LT	802.30

LEGEND

TACTILE DIRECTIONAL INDICATOR

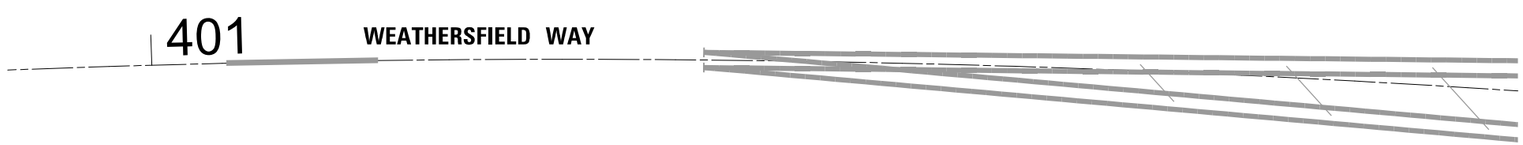

0 5 10 15

SCALE IN FEET

MODEL: ADA-13 [Sheet]
FILE NAME: c:\bms\civiltech-pw\petro.kravets\d0140567\3993 ADA Curb Ramps.dgn

USER NAME = pk	DESIGNED - AMP	REVISED -	
	DRAWN - AMP	REVISED -	
	CHECKED - PK	REVISED -	
PLOT DATE = 12/15/2025	DATE - 12/12/2025	REVISED -	

STATE OF ILLINOIS
DEPARTMENT OF TRANSPORTATION

BRAINTREE DRIVE
ADA GRADING PLAN

SCALE: 1" = 5' | SHEET 13 OF 17 SHEETS | STA. TO STA.

MUN RTE.	SECTION	COUNTY	TOTAL SHEETS	SHEET NO.
4029	23-00146-00-PV	COOK	315	144

CONTRACT NO. 61M26

ILLINOIS | FED. AID PROJECT

POINT	STATION	OFFSET	ELEVATION
A	401+44.67	18.81' RT	801.40
B	401+35.42	19.23' RT	801.40
C	401+35.45	20.81' RT	801.39
D	401+44.75	20.39' RT	801.39
E	401+46.52	21.39' RT	801.40
F	401+43.94	25.71' RT	801.44
G	401+55.70	32.29' RT	801.24
H	401+58.25	27.94' RT	801.20
I	401+76.52	37.70' RT	800.90
J	401+74.03	42.09' RT	800.93
K	401+76.46	43.35' RT	800.89
L	401+74.54	44.05' RT	800.92
M	401+69.27	43.99' RT	(800.97)
N	401+69.21	48.98' RT	(801.05)
O	401+74.48	49.03' RT	801.00
P	401+82.91	48.96' RT	800.91
Q	401+82.87	40.96' RT	800.79
R	401+92.46	40.95' RT	800.72
S	401+92.44	48.95' RT	800.81

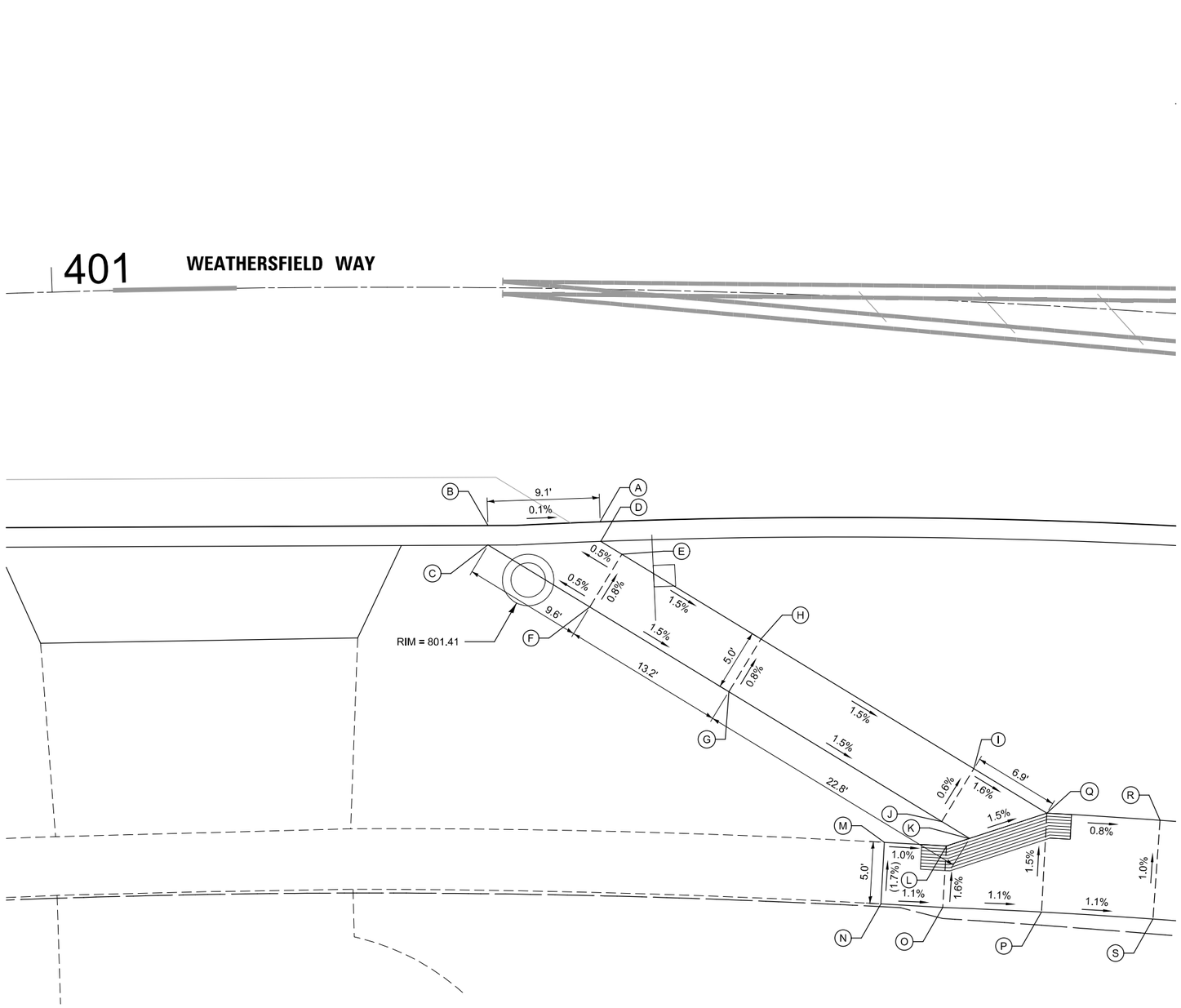

LEGEND

TACTILE DIRECTIONAL INDICATOR

0 5 10 15

SCALE IN FEET

MODEL: ADA-14 [Sheet]
FILE NAME: c:\bms\dvltech-pw\petro.kravets\d0140567\3993 ADA Curb Ramps.dgn

USER NAME = pk	DESIGNED - AMP	REVISED -	
	DRAWN - AMP	REVISED -	
	CHECKED - PK	REVISED -	
PLOT DATE = 12/15/2025	DATE - 12/12/2025	REVISED -	

STATE OF ILLINOIS
DEPARTMENT OF TRANSPORTATION

BRAINTREE DRIVE
ADA GRADING PLAN

SCALE: 1" = 5' | SHEET 14 OF 17 SHEETS | STA. TO STA.

MUN RTE.	SECTION	COUNTY	TOTAL SHEETS	SHEET NO.
4029	23-00146-00-PV	COOK	315	145

CONTRACT NO. 61M26

ILLINOIS | FED. AID PROJECT

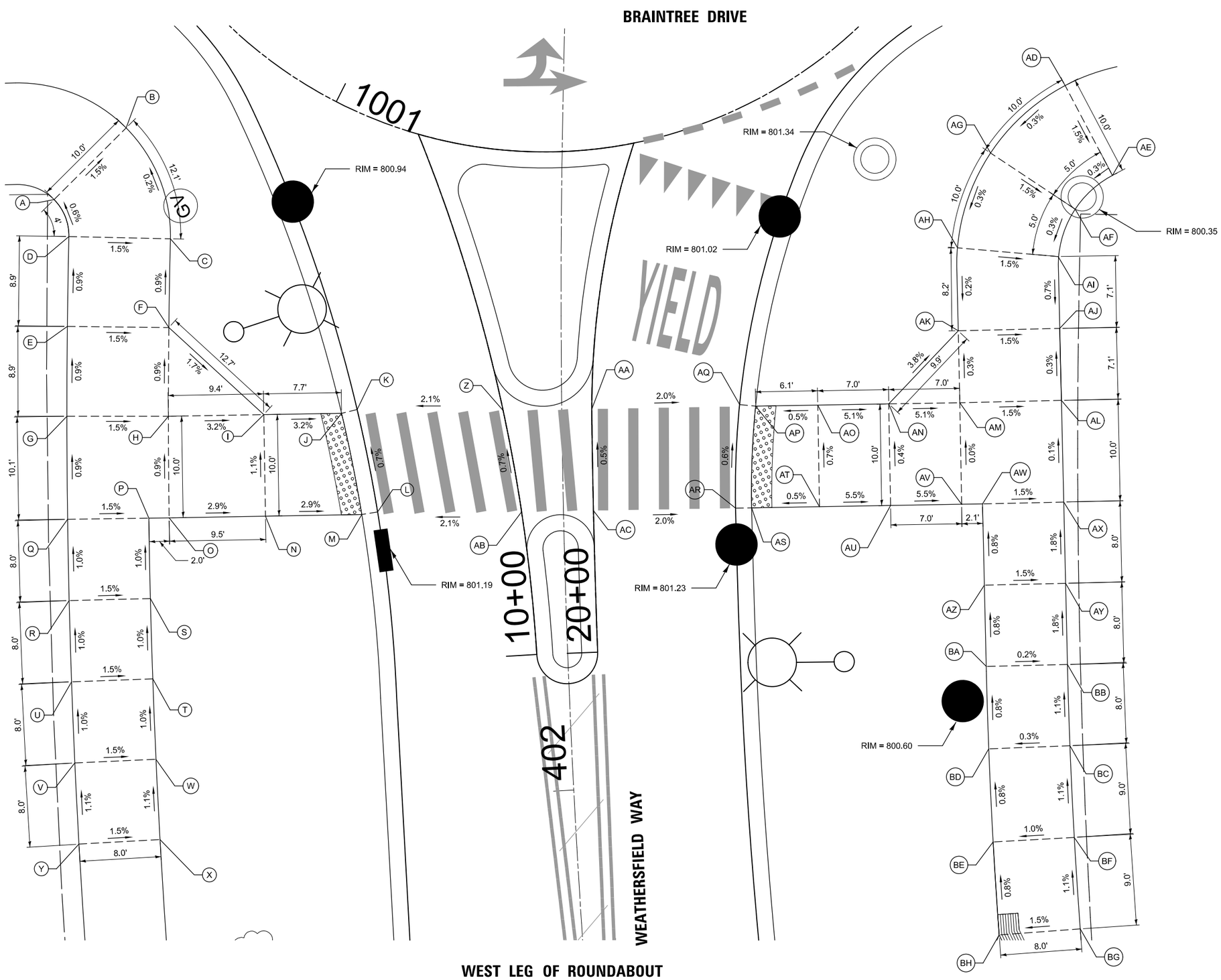

POINT	STATION	OFFSET	ELEVATION
A	402+57.69	49.97' LT	801.59
B	402+64.49	42.97' LT	801.44
C	402+54.08	38.49' LT	801.46
D	402+54.24	48.49' LT	801.61
E	402+45.82	48.63' LT	801.70
F	402+45.68	38.63' LT	801.55
G	402+37.40	48.74' LT	801.78
H	402+37.29	38.74' LT	801.63
I	402+37.34	29.35' LT	801.33
J	402+37.38	21.68' LT	801.09
K	402+37.71	20.14' LT	801.10
L	402+27.81	18.30' LT	801.17
M	402+27.59	19.86' LT	801.16
N	402+27.64	29.35' LT	801.44
O	402+27.68	38.84' LT	801.72
P	402+27.69	40.84' LT	801.75
Q	402+27.76	48.84' LT	801.87
R	402+20.15	48.90' LT	801.95
S	402+20.11	40.90' LT	801.83
T	402+12.52	40.93' LT	801.90
U	402+12.54	48.93' LT	802.02
V	402+04.93	48.95' LT	802.10
W	402+04.93	40.95' LT	801.98
X	401+97.34	40.94' LT	802.07
Y	401+97.32	48.94' LT	802.19
Z	402+37.46	5.77' LT	801.40
AA	402+37.50	2.96' RT	801.45
AB	402+27.51	4.13' LT	801.47
AC	402+27.47	2.95' RT	801.50
AD	402+70.43	49.40' RT	800.52
AE	402+61.25	54.22' RT	800.38
AF	402+57.69	50.59' RT	800.34
AG	402+63.39	42.19' RT	800.49
AH	402+53.60	39.03' RT	800.46
AI	402+52.75	48.99' RT	800.31
AJ	402+45.29	49.10' RT	800.29
AK	402+45.09	39.10' RT	800.44
AL	402+37.82	49.21' RT	800.32
AM	402+37.70	39.21' RT	800.47
AN	402+37.66	32.21' RT	800.82
AO	402+37.62	25.21' RT	801.18
AP	402+37.59	19.09' RT	801.15
AQ	402+37.77	17.52' RT	801.15
AR	402+27.39	16.95' RT	801.22
AS	402+27.39	18.53' RT	801.21
AT	402+27.35	25.21' RT	801.24
AU	402+27.31	32.21' RT	800.86
AV	402+27.27	39.21' RT	800.48
AW	402+27.26	41.27' RT	800.45
AX	402+27.26	49.27' RT	800.33
AY	402+18.83	49.24' RT	800.47
AZ	402+18.90	41.24' RT	800.59
BA	402+10.54	41.14' RT	800.64
BB	402+10.39	49.14' RT	800.63
BC	402+01.96	49.02' RT	800.71
BD	402+02.05	41.02' RT	800.69
BE	401+92.46	40.95' RT	800.73
BF	401+92.44	48.95' RT	800.81
BG	401+82.91	48.96' RT	800.91
BH	401+82.87	40.96' RT	800.79

0 5 10 15
SCALE IN FEET

MODEL: ADA-15 [Sheet]
FILE NAME: c:\bms\dvl\tech-pw\petro.kravets\d0140567\3983 ADA Curb Ramps.dgn

USER NAME = pk	DESIGNED - AMP	REVISED -	
	DRAWN - AMP	REVISED -	
	CHECKED - PK	REVISED -	
PLOT DATE = 12/15/2025	DATE - 12/12/2025	REVISED -	

STATE OF ILLINOIS
DEPARTMENT OF TRANSPORTATION

BRAINTREE DRIVE
ADA GRADING PLAN

SCALE: 1" = 5' | SHEET 15 OF 17 SHEETS | STA. | TO STA.

MUN RTE.	SECTION	COUNTY	TOTAL SHEETS	SHEET NO.
4029	23-00146-00-PV	COOK	315	146

CONTRACT NO. 61M26

ILLINOIS | FED. AID PROJECT

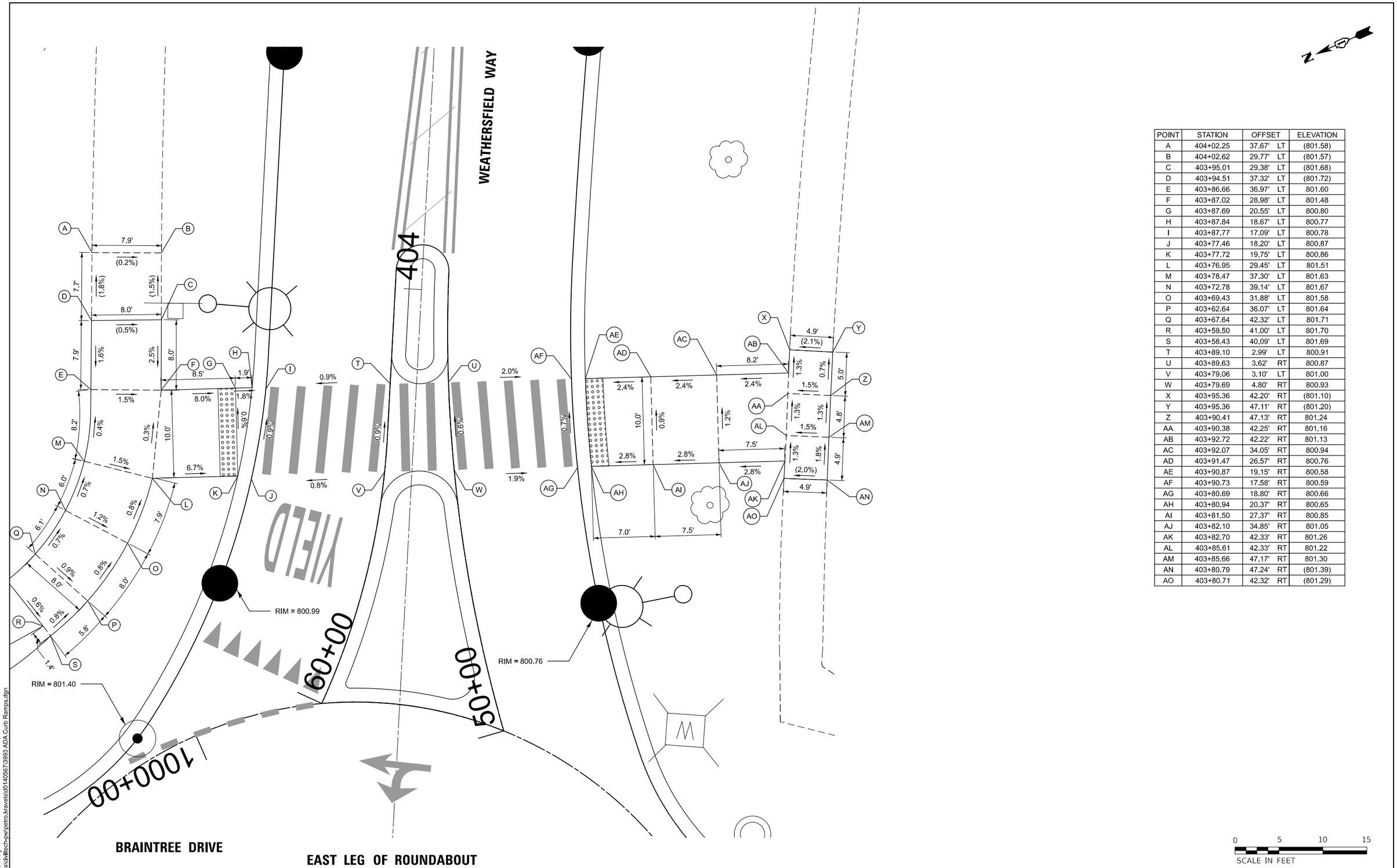

POINT	STATION	OFFSET	ELEVATION
A	404+02.25	37.67' LT	(801.58)
B	404+02.62	29.77' LT	(801.57)
C	403+95.01	29.38' LT	(801.68)
D	403+94.51	37.32' LT	(801.72)
E	403+86.66	36.97' LT	801.60
F	403+87.02	28.98' LT	801.48
G	403+87.69	20.55' LT	800.80
H	403+87.84	18.67' LT	800.77
I	403+87.77	17.09' LT	800.78
J	403+77.46	18.20' LT	800.87
K	403+77.72	19.75' LT	800.86
L	403+76.95	29.45' LT	801.51
M	403+78.47	37.30' LT	801.63
N	403+72.78	39.14' LT	801.67
O	403+69.43	31.88' LT	801.58
P	403+62.64	36.07' LT	801.64
Q	403+67.64	42.32' LT	801.71
R	403+59.50	41.00' LT	801.70
S	403+58.43	40.09' LT	801.69
T	403+89.10	2.99' LT	800.91
U	403+89.63	3.62' RT	800.87
V	403+79.06	3.10' LT	801.00
W	403+79.69	4.80' RT	800.93
X	403+95.36	42.20' RT	(801.10)
Y	403+95.36	47.11' RT	(801.20)
Z	403+90.41	47.13' RT	801.24
AA	403+90.38	42.25' RT	801.16
AB	403+92.72	42.22' RT	801.13
AC	403+92.07	34.05' RT	800.94
AD	403+91.47	26.57' RT	800.76
AE	403+90.87	19.15' RT	800.58
AF	403+90.73	17.58' RT	800.59
AG	403+80.69	18.80' RT	800.66
AH	403+80.94	20.37' RT	800.65
AI	403+81.50	27.37' RT	800.85
AJ	403+82.10	34.85' RT	801.05
AK	403+82.70	42.33' RT	801.26
AL	403+85.61	42.33' RT	801.22
AM	403+85.66	47.17' RT	801.30
AN	403+80.79	47.24' RT	(801.39)
AO	403+80.71	42.32' RT	(801.29)

MODEL: ADA-16 [Sheet]
FILE NAME: c:\bmsidv\tech-pw\petro.kravets\d0140567\3993 ADA Curb Ramps.dgn

USER NAME = pk	DESIGNED - AMP	REVISED -	
	DRAWN - AMP	REVISED -	
	CHECKED - PK	REVISED -	
PLOT DATE = 12/15/2025	DATE - 12/12/2025	REVISED -	

STATE OF ILLINOIS
DEPARTMENT OF TRANSPORTATION

BRAINTREE DRIVE
ADA GRADING PLAN

SCALE: 1" = 5' | SHEET 16 OF 17 SHEETS | STA. TO STA.

MUN RTE.	SECTION	COUNTY	TOTAL SHEETS	SHEET NO.
4029	23-00146-00-PV	COOK	315	147

CONTRACT NO. 61M26

ILLINOIS | FED. AID PROJECT

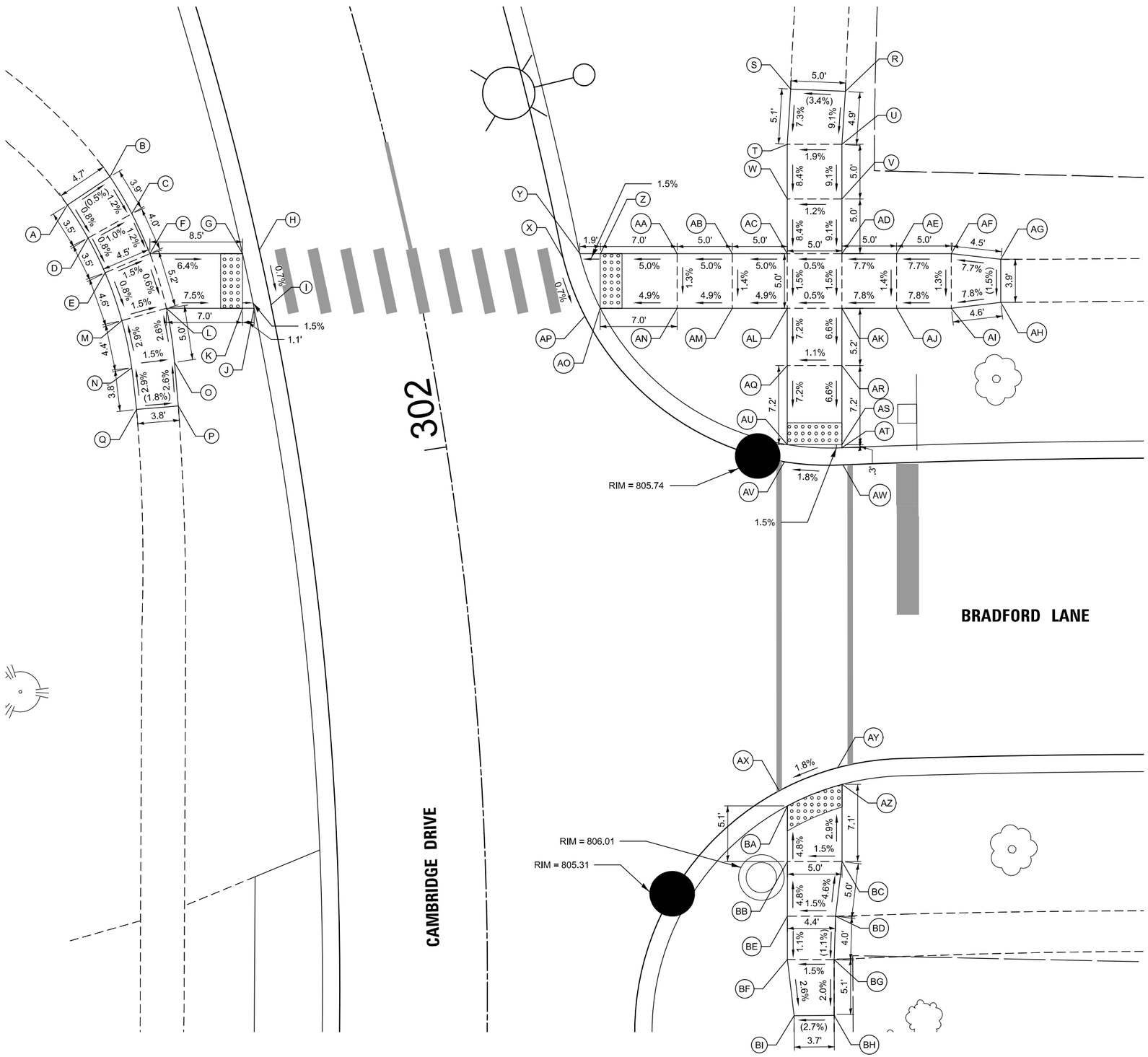

POINT	STATION	OFFSET	ELEVATION
A	302+29.90	29.64' LT	(806.38)
B	302+31.62	25.24' LT	(806.35)
C	302+27.54	24.11' LT	806.30
D	302+26.20	28.53' LT	806.35
E	302+22.42	27.72' LT	806.32
F	302+23.29	23.35' LT	806.25
G	302+21.32	15.08' LT	805.71
H	302+21.32	13.50' LT	805.72
I	302+15.95	13.50' LT	805.69
J	302+15.95	15.08' LT	805.68
K	302+16.18	16.12' LT	805.70
L	302+17.68	22.94' LT	806.22
M	302+17.39	27.15' LT	806.28
N	302+12.58	27.12' LT	806.41
O	302+12.31	23.18' LT	806.35
P	302+08.02	23.58' LT	(806.45)
Q	302+08.41	27.38' LT	(806.52)
R	302+23.78	41.71' RT	(808.12)
S	302+24.78	36.84' RT	(807.95)
T	302+20.40	35.73' RT	807.59
U	302+19.45	40.62' RT	807.68
V	302+15.09	39.60' RT	807.23
W	302+15.99	34.70' RT	807.17
X	302+14.87	13.52' RT	805.87
Y	302+14.94	15.10' RT	805.86
Z	302+14.59	16.94' RT	805.89
AA	302+13.30	23.84' RT	806.24
AB	302+12.41	28.78' RT	806.49
AC	302+11.55	33.73' RT	806.74
AD	302+10.71	38.64' RT	806.77
AE	302+09.90	43.56' RT	807.15
AF	302+09.11	48.48' RT	807.54
AG	302+08.34	53.40' RT	(807.88)
AH	302+04.11	52.54' RT	(807.83)
AI	302+04.82	47.61' RT	807.47
AJ	302+05.56	42.68' RT	807.08
AK	302+06.31	37.76' RT	806.69
AL	302+07.09	32.83' RT	806.67
AM	302+07.89	27.87' RT	806.42
AN	302+08.72	22.91' RT	806.18
AO	302+09.91	16.00' RT	805.84
AP	302+09.48	14.48' RT	805.84
AQ	302+02.39	31.96' RT	806.29
AR	302+01.68	36.90' RT	806.35
AS	301+95.25	35.83' RT	805.87
AT	301+95.00	35.80' RT	805.86
AU	301+95.87	30.88' RT	805.77
AV	301+94.49	30.42' RT	805.77
AW	301+93.58	35.67' RT	805.87
AX	301+67.01	27.15' RT	805.66
AY	301+68.68	32.59' RT	805.77
AZ	301+67.28	32.92' RT	805.77
BA	301+65.70	27.82' RT	805.66
BB	301+61.01	27.63' RT	805.90
BC	301+60.87	32.62' RT	805.97
BD	301+56.33	31.90' RT	(806.20)
BE	301+56.41	27.50' RT	806.14
BF	301+52.76	27.45' RT	806.10
BG	301+52.72	31.72' RT	(806.16)
BH	301+48.02	31.73' RT	(806.06)
BI	301+47.97	28.06' RT	(805.96)

0 5 10 15
SCALE IN FEET

MODEL: ADA-17 [Sheet]
FILE NAME: c:\bms\dcvitech-pw\petro.kravets\d0140567\3993 ADA Curb Ramps.dgn

USER NAME = pk	DESIGNED - AMP	REVISED -	
	DRAWN - AMP	REVISED -	
	CHECKED - PK	REVISED -	
PLOT DATE = 12/15/2025	DATE - 12/12/2025	REVISED -	

STATE OF ILLINOIS
DEPARTMENT OF TRANSPORTATION

BRAINTREE DRIVE
ADA GRADING PLAN

SCALE: 1" = 5' | SHEET 17 OF 17 SHEETS | STA. | TO STA.

MUN RTE.	SECTION	COUNTY	TOTAL SHEETS	SHEET NO.
4029	23-00146-00-PV	COOK	315	148

CONTRACT NO. 61M26

ILLINOIS | FED. AID PROJECT

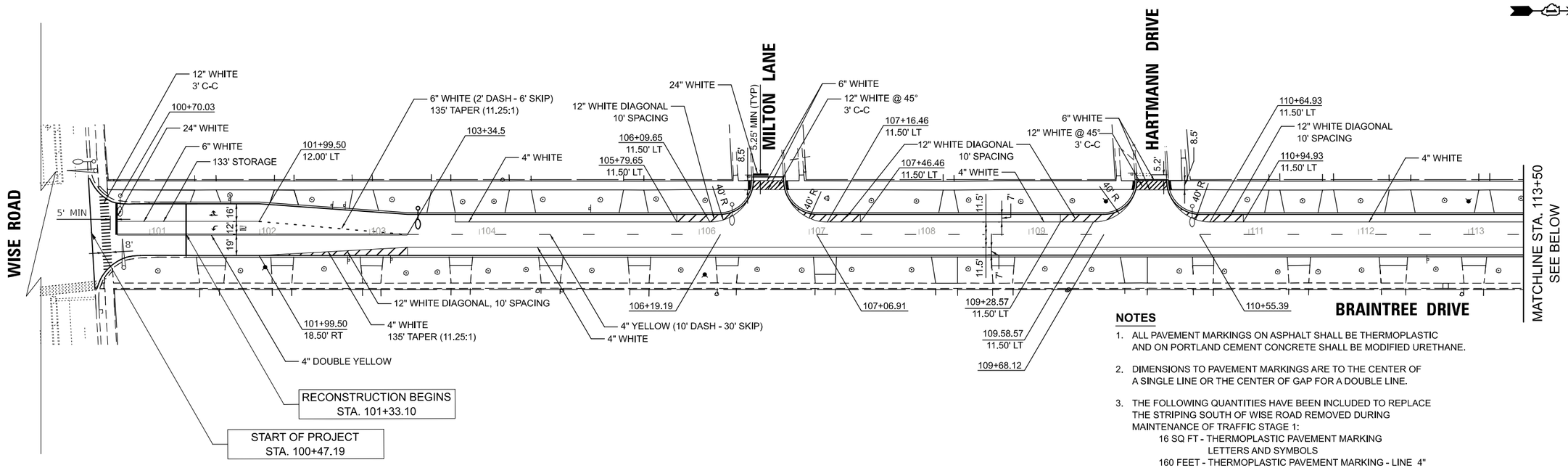

NOTES

1. ALL PAVEMENT MARKINGS ON ASPHALT SHALL BE THERMOPLASTIC AND ON PORTLAND CEMENT CONCRETE SHALL BE MODIFIED URETHANE.
2. DIMENSIONS TO PAVEMENT MARKINGS ARE TO THE CENTER OF A SINGLE LINE OR THE CENTER OF GAP FOR A DOUBLE LINE.
3. THE FOLLOWING QUANTITIES HAVE BEEN INCLUDED TO REPLACE THE STRIPING SOUTH OF WISE ROAD REMOVED DURING MAINTENANCE OF TRAFFIC STAGE 1:
   - 16 SQ FT - THERMOPLASTIC PAVEMENT MARKING LETTERS AND SYMBOLS
   - 160 FEET - THERMOPLASTIC PAVEMENT MARKING - LINE 4"
   - 272 FEET - THERMOPLASTIC PAVEMENT MARKING - LINE 6"
   - 42 FEET - THERMOPLASTIC PAVEMENT MARKING - LINE 24"

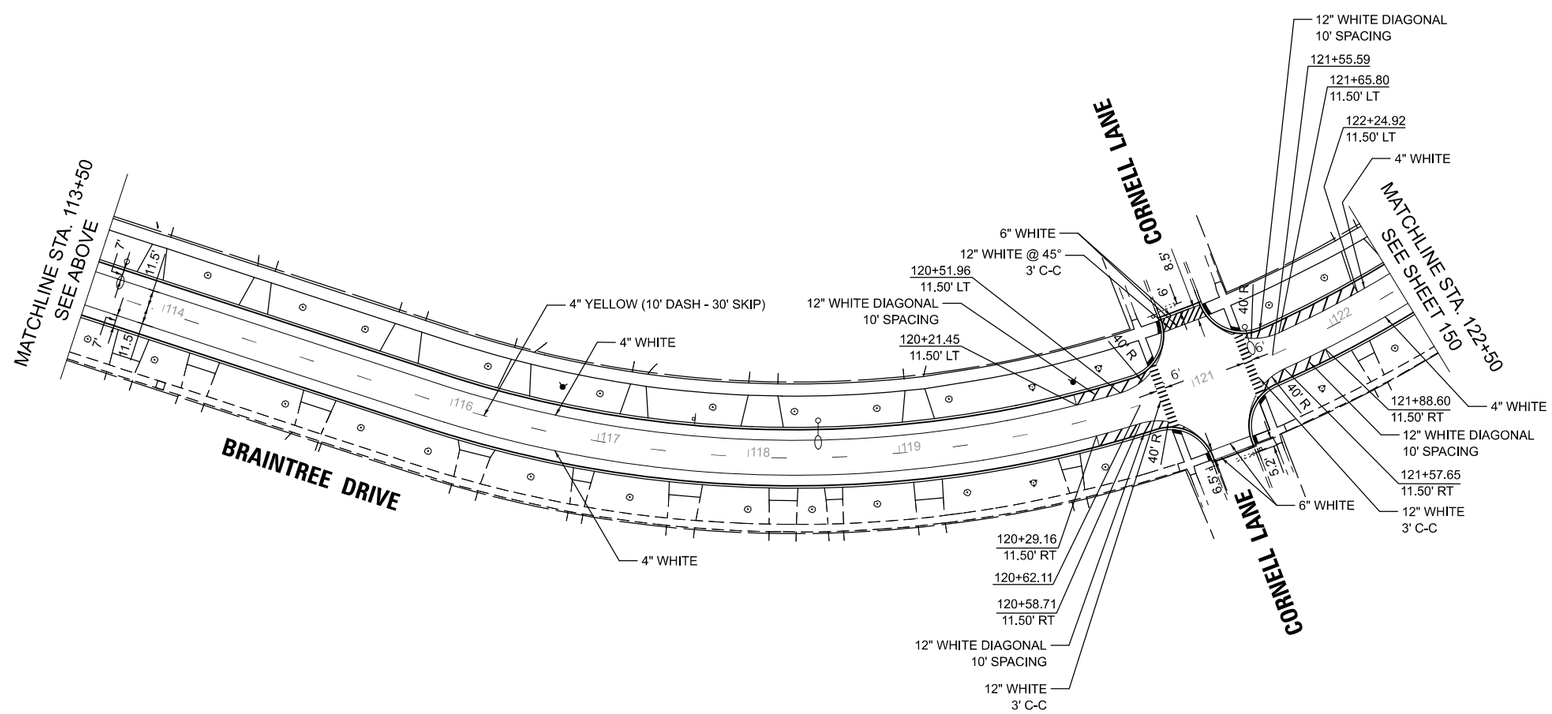

MODEL: Braintree - Plan 1 [Sheet]
FILE NAME: c:\bms\dvittech-pw\petro.kravets\d0140568\3993 PMK Sheets.dgn

USER NAME = pk	DESIGNED - AMP	REVISED -	
	DRAWN - AMP	REVISED -	
	CHECKED - PK	REVISED -	
PLOT DATE = 12/15/2025	DATE - 12/12/2025	REVISED -	

STATE OF ILLINOIS
DEPARTMENT OF TRANSPORTATION

BRAINTREE DRIVE
PAVEMENT MARKING PLAN

SCALE: 1"=50' | SHEET 1 OF 4 SHEETS | STA. 100+00.00 TO STA. 122+50.00

MUN RTE.	SECTION	COUNTY	TOTAL SHEETS	SHEET NO.
4029	23-00146-00-PV	COOK	315	149

CONTRACT NO. 61M26

ILLINOIS | FED. AID PROJECT

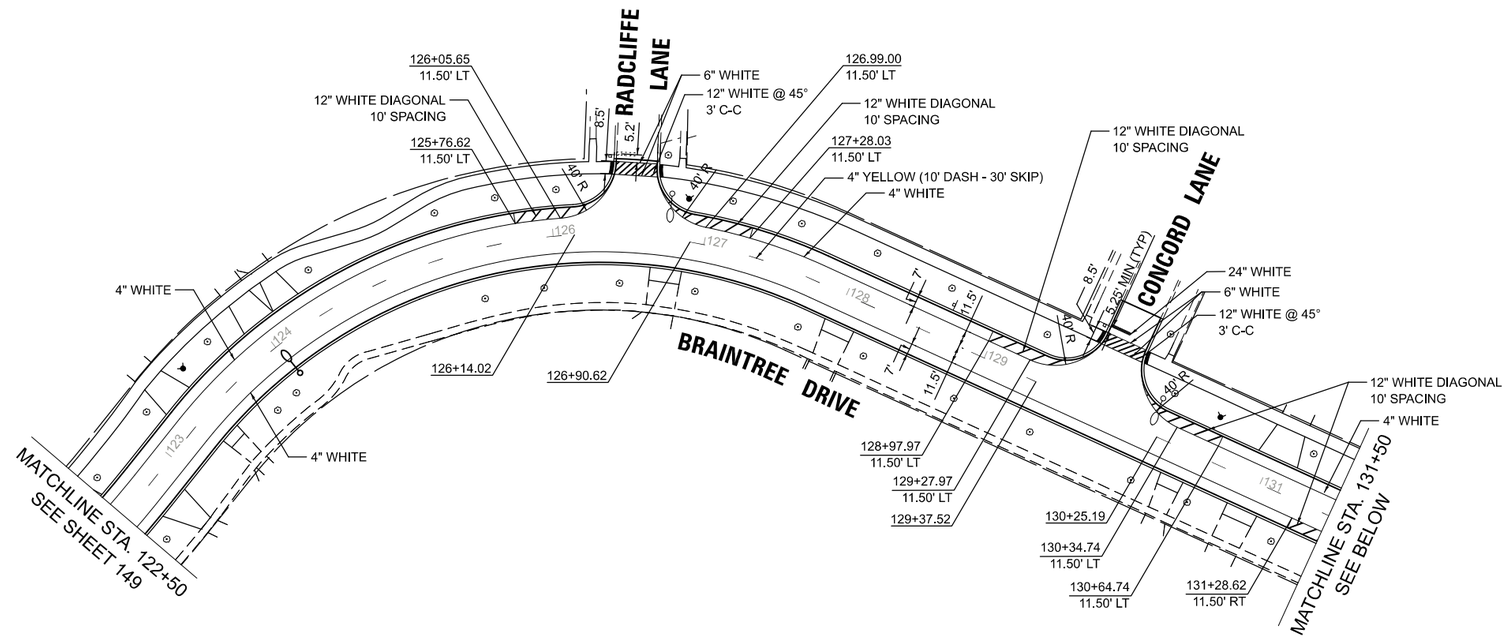

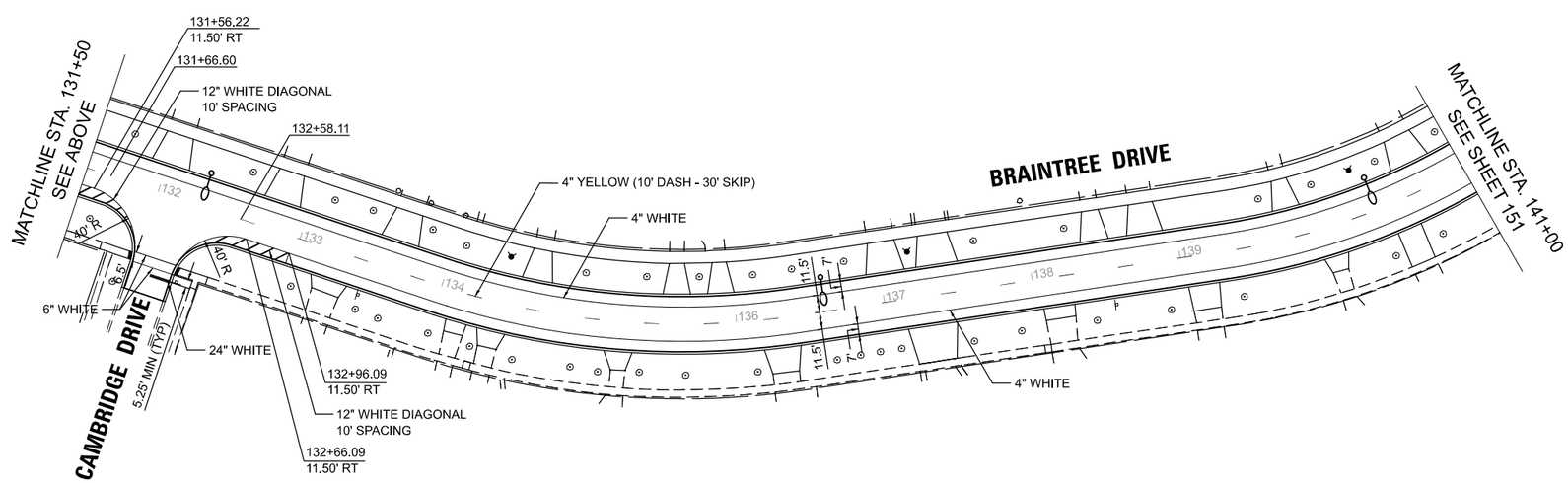

MODEL: Braintree - Plan 3 [Sheet]
FILE NAME: c:\bms\dvltech-pw\petro.kravets\d0140568\3993 PMK Sheets.dgn

USER NAME = pk	DESIGNED - AMP	REVISED -	
	DRAWN - AMP	REVISED -	
	CHECKED - PK	REVISED -	
PLOT DATE = 12/15/2025	DATE - 12/12/2025	REVISED -	

STATE OF ILLINOIS
DEPARTMENT OF TRANSPORTATION

BRAINTREE DRIVE
PAVEMENT MARKING PLAN

SCALE: 1"=50' | SHEET 2 OF 4 SHEETS | STA. 122+50.00 TO STA. 141+00.00

MUN RTE.	SECTION	COUNTY	TOTAL SHEETS	SHEET NO.
4029	23-00146-00-PV	COOK	315	150

CONTRACT NO. 61M26

ILLINOIS | FED. AID PROJECT

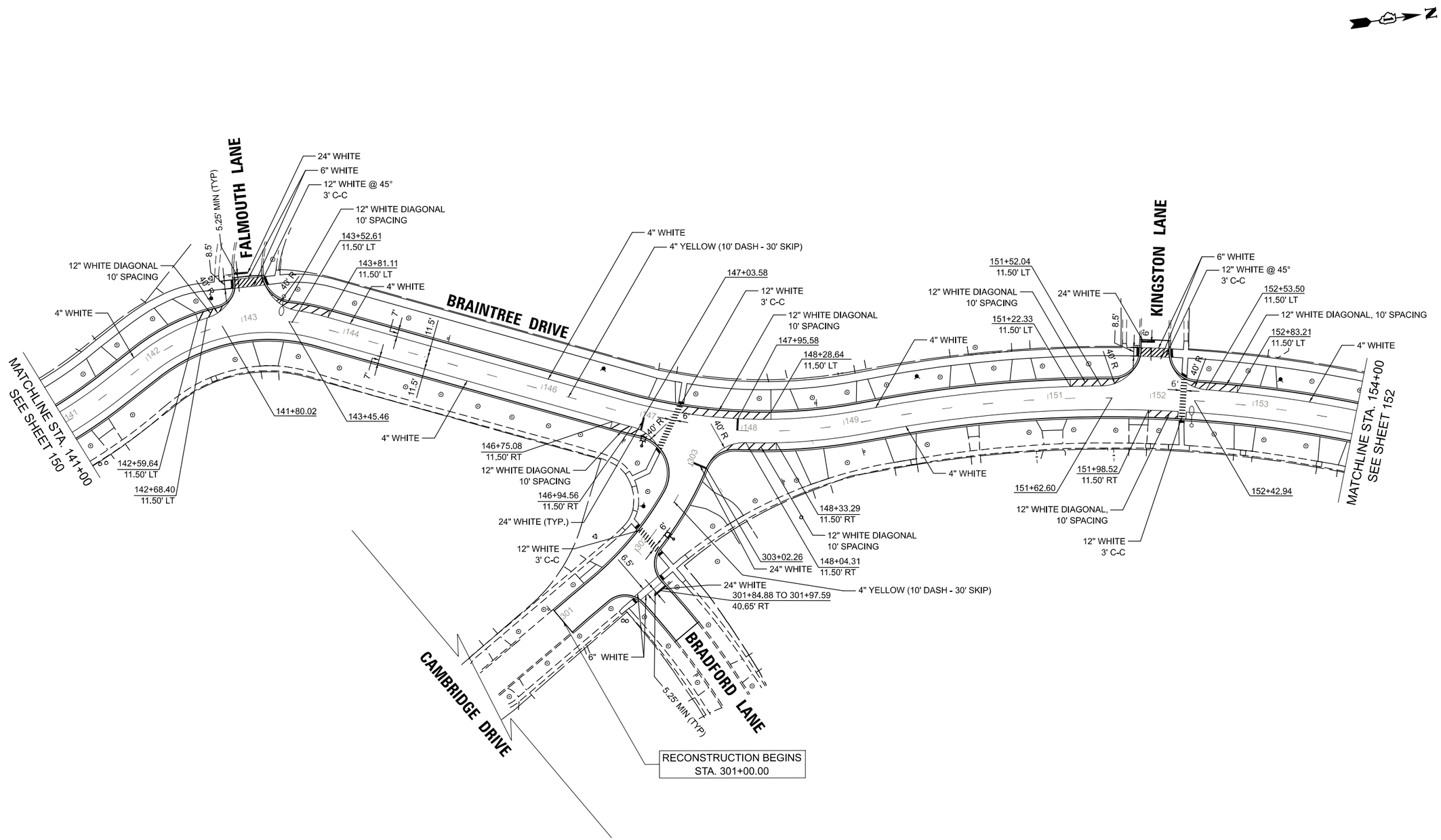

MODEL: Braintree-1 - Plan 5 [Sheet]
FILE NAME: c:\bms\dvlltech-pw\petro.kravets\d0140568\3993 PMK Sheets.dgn

USER NAME = pk	DESIGNED - AMP	REVISED -	
	DRAWN - AMP	REVISED -	
	CHECKED - PK	REVISED -	
PLOT DATE = 12/11/2025	DATE - 12/12/2025	REVISED -	

STATE OF ILLINOIS
DEPARTMENT OF TRANSPORTATION

BRAINTREE DRIVE
PAVEMENT MARKING PLAN

SCALE: 1"=50' | SHEET 3 OF 4 SHEETS | STA. 141+00.00 TO STA. 154+00.00

MUN RTE.	SECTION	COUNTY	TOTAL SHEETS	SHEET NO.
4029	23-00146-00-PV	COOK	315	151

CONTRACT NO. 61M26

ILLINOIS | FED. AID PROJECT

NOTES

1. YIELD LINE SYMBOLS SHALL BE 24" WIDTH BY 36" HEIGHT WITH A SPACING OF 12" BETWEEN SYMBOLS AND PAID FOR AS "THERMOPLASTIC PAVEMENT MARKING - LETTERS AND SYMBOLS"

2. COORDINATE PROPOSED PAVEMENT MARKINGS WITH ADJACENT PROJECT CONTRACT 61M27

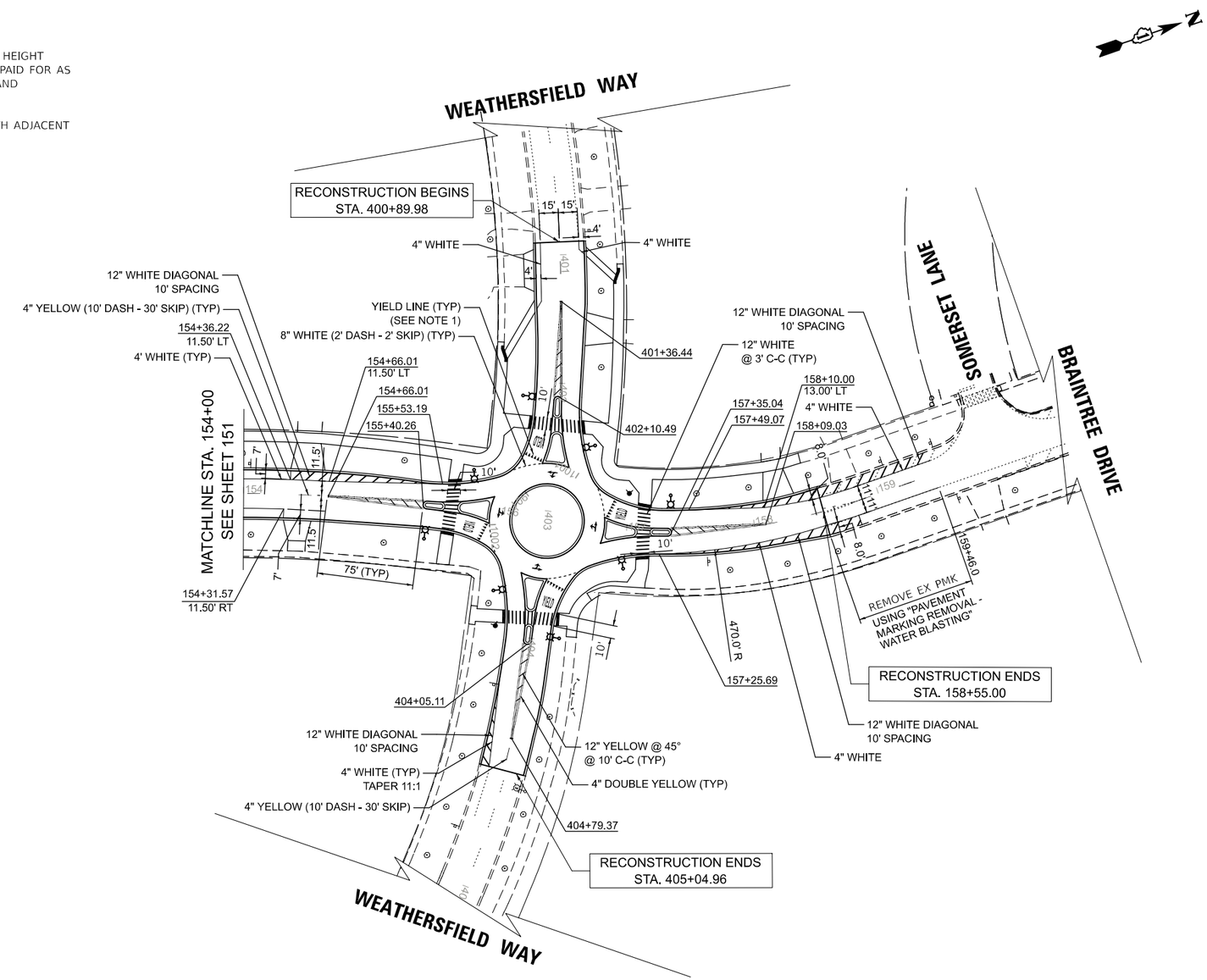

MODEL: Braintree-1 - Plan 6 [Sheet]
FILE NAME: c:\bms\dvlltech-pw\petro.kravets\d0140568\3993 PMK Sheets.dgn

USER NAME = pk	DESIGNED - AMP	REVISED -	
	DRAWN - AMP	REVISED -	
	CHECKED - PK	REVISED -	
PLOT DATE = 12/15/2025	DATE - 12/12/2025	REVISED -	

STATE OF ILLINOIS
DEPARTMENT OF TRANSPORTATION

BRAINTREE DRIVE
PAVEMENT MARKING PLAN

SCALE: 1"=50' | SHEET 4 OF 4 SHEETS | STA. 154+00.00 TO STA. 159+00.00

MUN RTE.	SECTION	COUNTY	TOTAL SHEETS	SHEET NO.
4029	23-00146-00-PV	COOK	315	152

CONTRACT NO. 61M26

ILLINOIS | FED. AID PROJECT

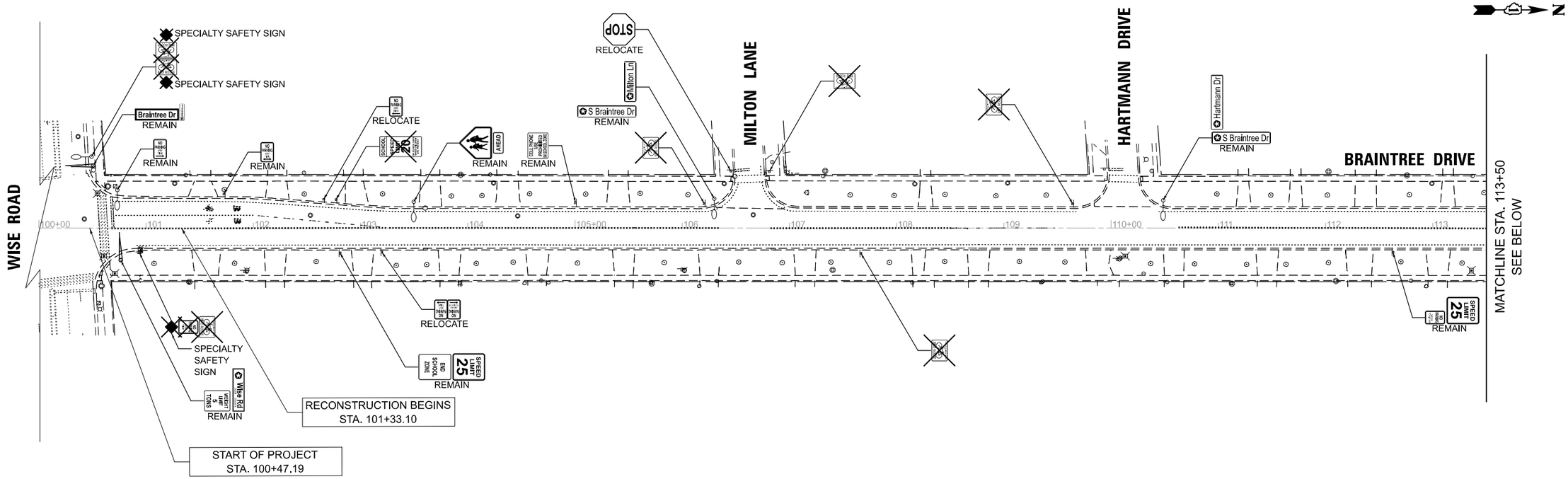

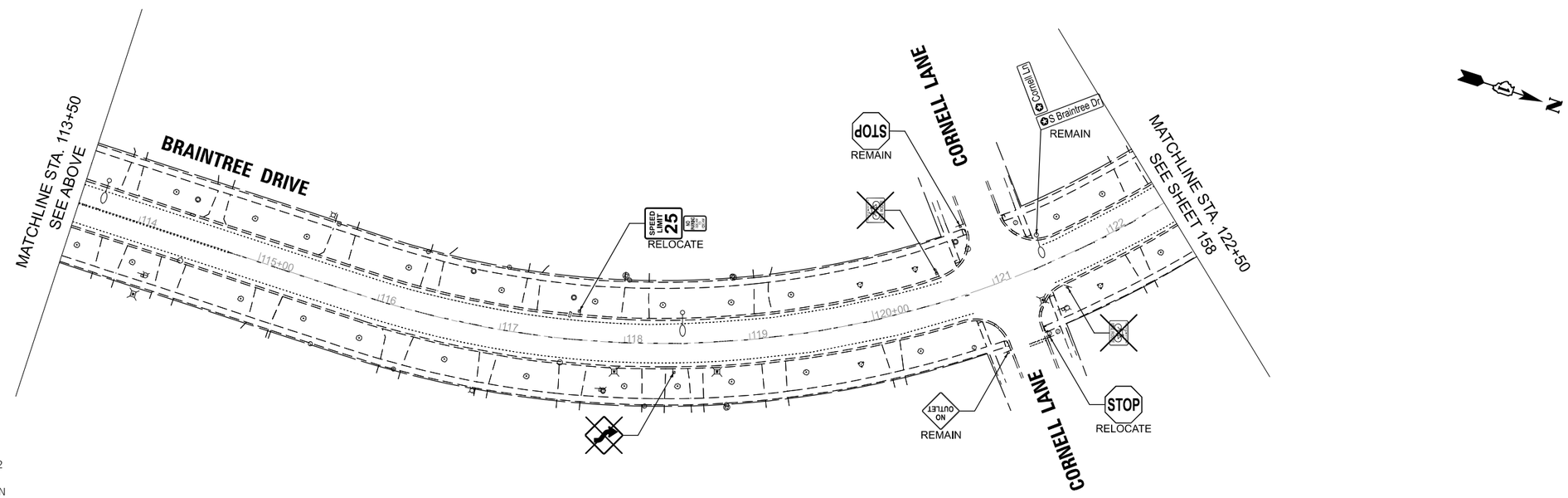

LEGEND

	EXISTING LIGHT POLE
	EXISTING SIGN
	PROPOSED SIGN PANEL, TYPE 1 OR TYPE 2
REMAIN	SIGN PANEL TO REMAIN IN SAME LOCATION
RELOCATE	SIGN PANEL TO BE RELOCATED TO NEW POST
	REMOVE SIGN PANEL ASSEMBLY

MODEL: Braintree - Plan 1 [Sheet]
FILE NAME: c:\bms\dvltech-pw\petro.kravets\d0140568\3993 Existing Signing Sheets.dgn

USER NAME = pk	DESIGNED - AMP	REVISED -	
	DRAWN - AMP	REVISED -	
	CHECKED - PK	REVISED -	
PLOT DATE = 12/15/2025	DATE - 12/12/2025	REVISED -	

STATE OF ILLINOIS
DEPARTMENT OF TRANSPORTATION

BRAINTREE DRIVE
EXISTING SIGNING PLAN

SCALE: 1"=50' | SHEET 1 OF 4 SHEETS | STA. 100+00.00 TO STA. 122+50.00

MUN RTE.	SECTION	COUNTY	TOTAL SHEETS	SHEET NO.
4029	23-00146-00-PV	COOK	315	153
		CONTRACT NO. 61M26		
		ILLINOIS	FED. AID PROJECT	

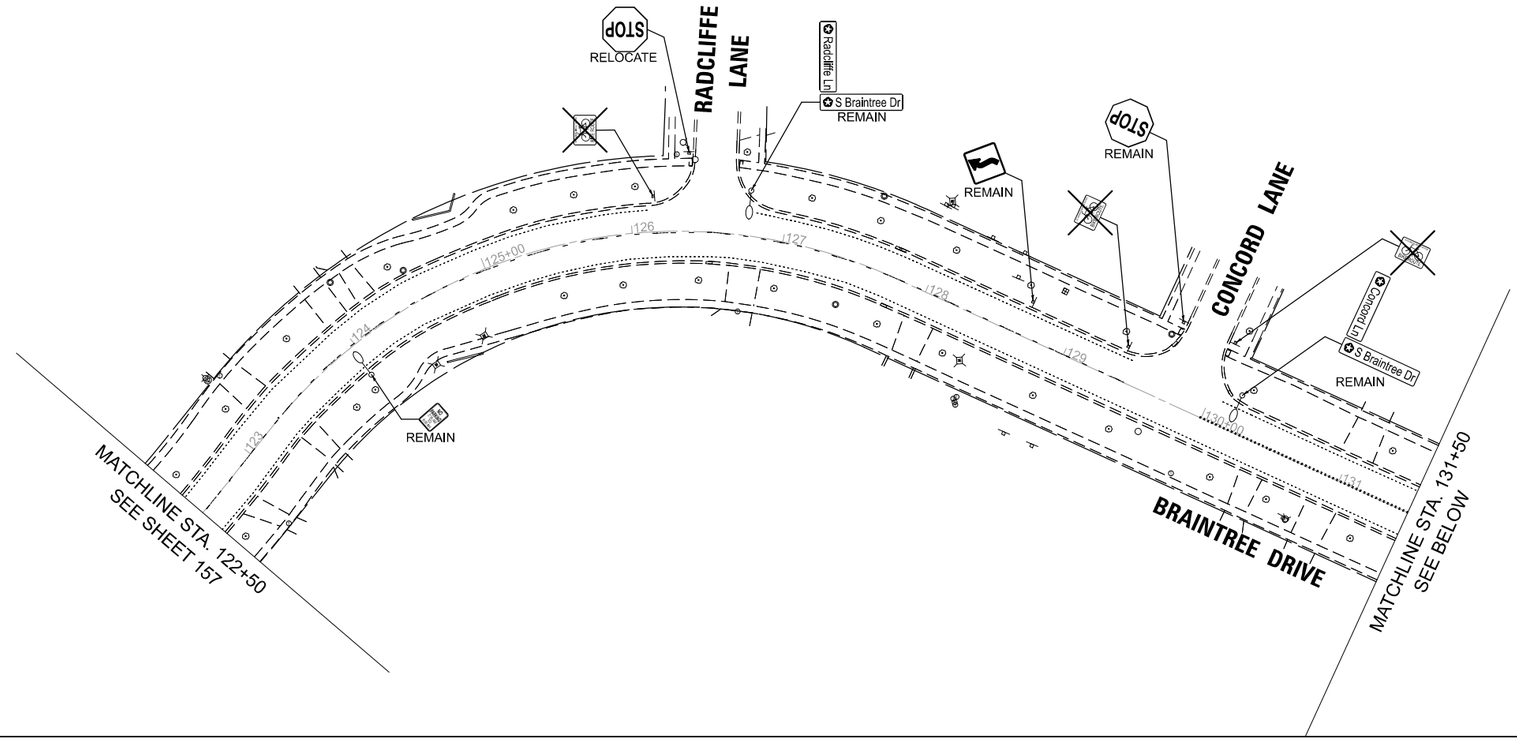

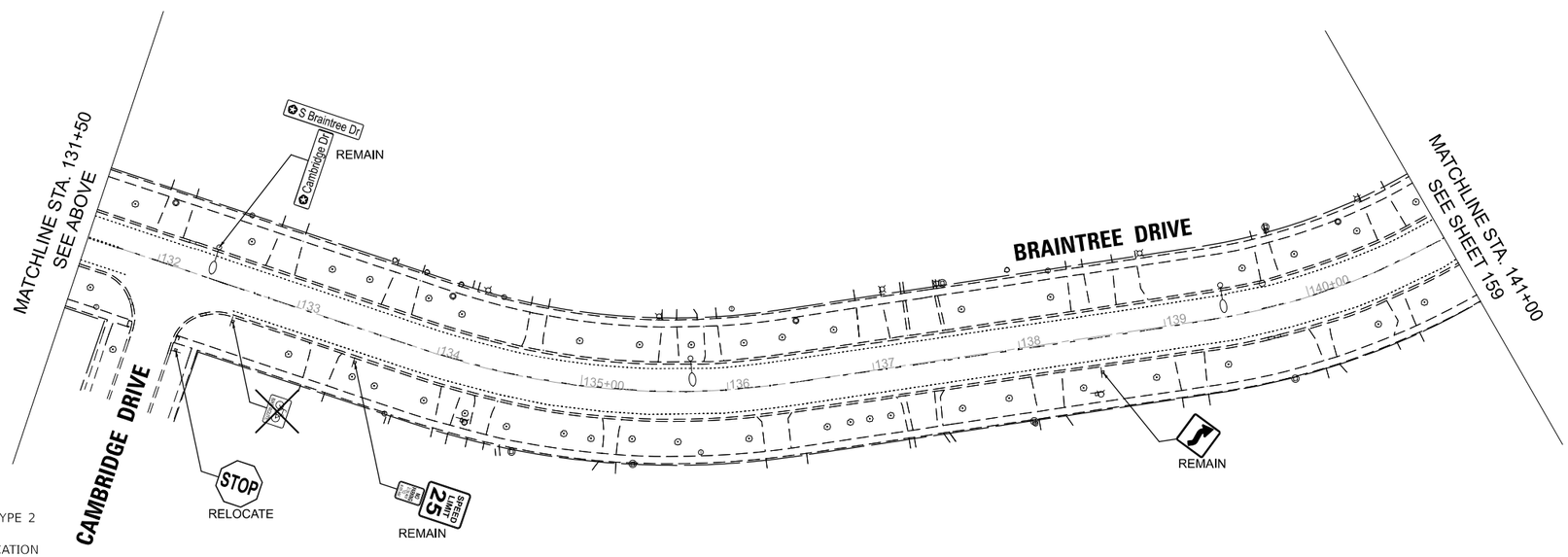

LEGEND

	EXISTING LIGHT POLE
	EXISTING SIGN
	PROPOSED SIGN PANEL, TYPE 1 OR TYPE 2
REMAIN	SIGN PANEL TO REMAIN IN SAME LOCATION
RELOCATE	SIGN PANEL TO BE RELOCATED TO NEW POST
X	REMOVE SIGN PANEL ASSEMBLY

MODEL: Braintree - Plan 3 [Sheet]
FILE NAME: c:\bms\dwltech-pw\petro.kravets.d0140568\3993 Existing Signing Sheets.dgn

USER NAME = pk	DESIGNED - AMP	REVISED -	
	DRAWN - AMP	REVISED -	
	CHECKED - PK	REVISED -	
PLOT DATE = 12/15/2025	DATE - 12/12/2025	REVISED -	

STATE OF ILLINOIS
DEPARTMENT OF TRANSPORTATION

BRAINTREE DRIVE
EXISTING SIGNING PLAN

SCALE: 1"=50' | SHEET 2 OF 4 SHEETS | STA. 122+50.00 TO STA. 141+00.00

MUN RTE.	SECTION	COUNTY	TOTAL SHEETS	SHEET NO.
4029	23-00146-00-PV	COOK	315	154

CONTRACT NO. 61M26

ILLINOIS | FED. AID PROJECT

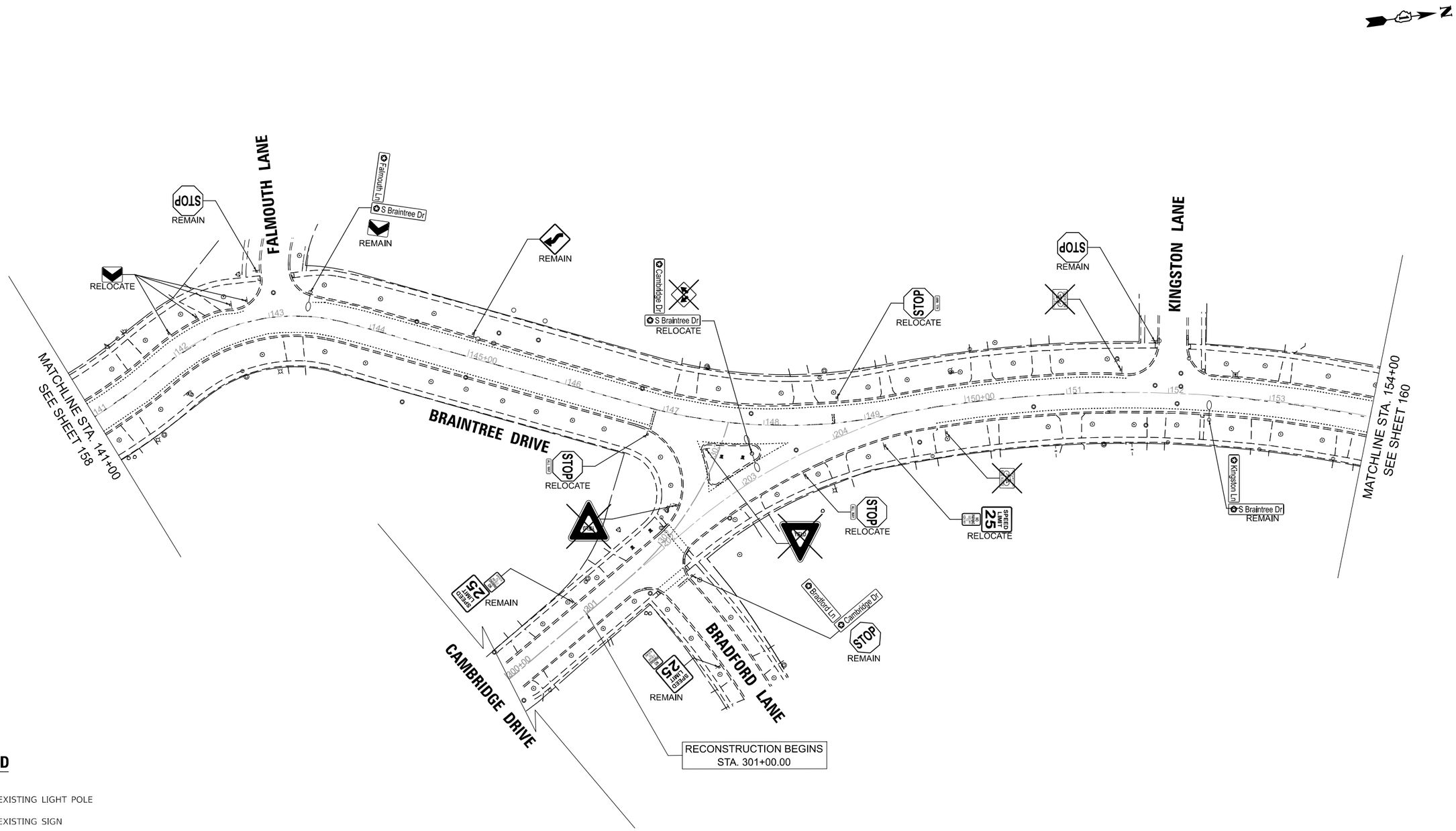

LEGEND

⌑	EXISTING LIGHT POLE
⊕	EXISTING SIGN
⊕	PROPOSED SIGN PANEL, TYPE 1 OR TYPE 2
REMAIN	SIGN PANEL TO REMAIN IN SAME LOCATION
RELOCATE	SIGN PANEL TO BE RELOCATED TO NEW POST
╳	REMOVE SIGN PANEL ASSEMBLY

MODEL: Braintree-1 - Plan 5 [Sheet]
FILE NAME: c:\bms\dotech-pw\petro.kravets\d1405693993 Existing Signing Sheets.dgn

USER NAME = pk	DESIGNED - AMP	REVISED -	
	DRAWN - AMP	REVISED -	
	CHECKED - PK	REVISED -	
PLOT DATE = 12/15/2025	DATE - 12/12/2025	REVISED -	

STATE OF ILLINOIS
DEPARTMENT OF TRANSPORTATION

BRAINTREE DRIVE
EXISTING SIGNING PLAN

SCALE: 1"=50' | SHEET 3 OF 4 SHEETS | STA. 141+00.00 TO STA. 154+00.00

MUN RTE.	SECTION	COUNTY	TOTAL SHEETS	SHEET NO.
4029	23-00146-00-PV	COOK	315	155

CONTRACT NO. 61M26

ILLINOIS | FED. AID PROJECT

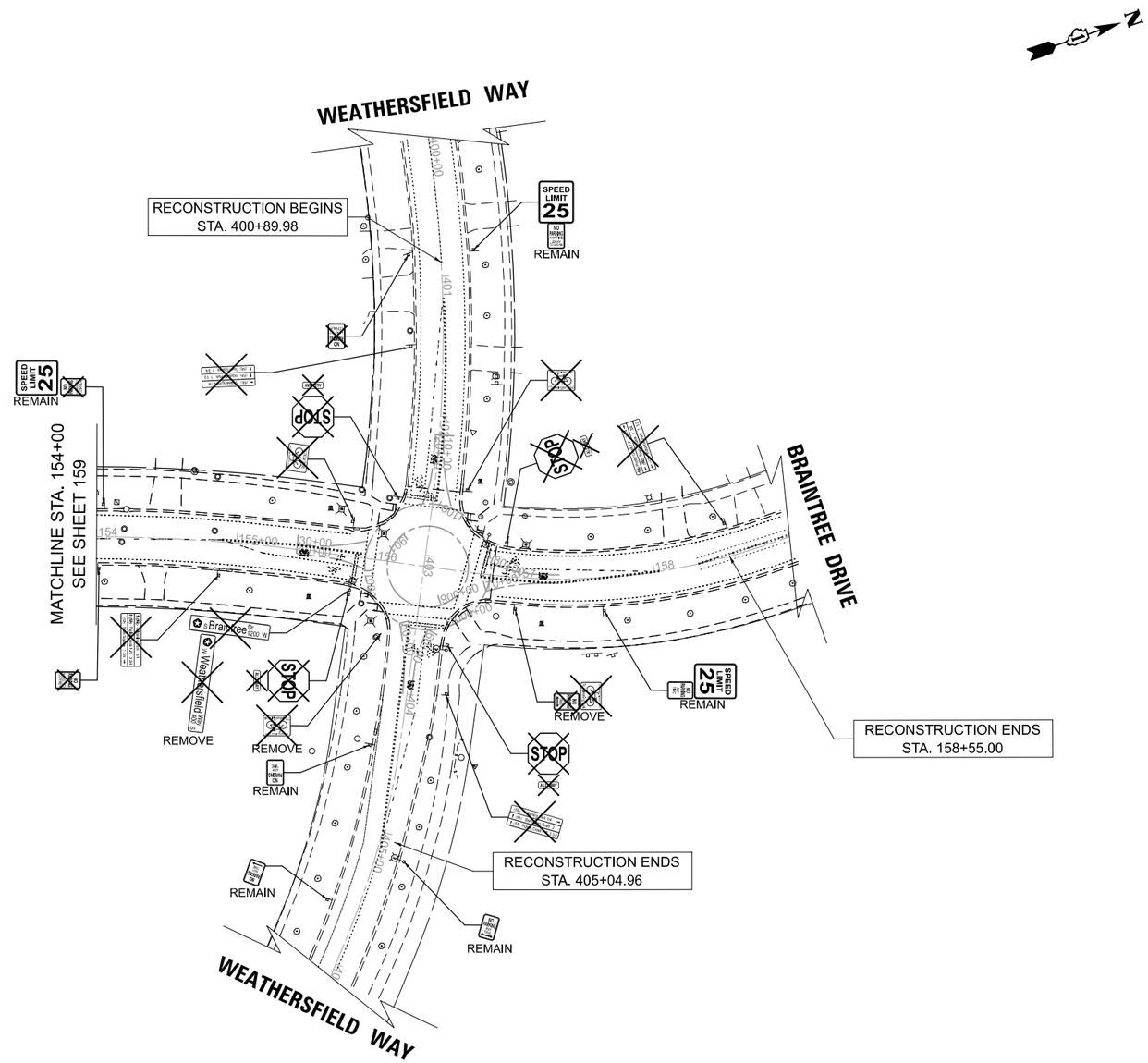

LEGEND

	EXISTING LIGHT POLE
	EXISTING SIGN
	PROPOSED SIGN PANEL, TYPE 1 OR TYPE 2
REMAIN	SIGN PANEL TO REMAIN IN SAME LOCATION
RELOCATE	SIGN PANEL TO BE RELOCATED TO NEW POST
	REMOVE SIGN PANEL ASSEMBLY

MODEL: Braintree-1 - Plan 6 [Sheet]
FILE NAME: c:\bms\dvlltech-pw\petro.kravets\d1405683993 Existing Signing Sheets.dgn

USER NAME = pk	DESIGNED - AMP	REVISED -	
	DRAWN - AMP	REVISED -	
	CHECKED - PK	REVISED -	
PLOT DATE = 12/11/2025	DATE - 12/12/2025	REVISED -	

STATE OF ILLINOIS
DEPARTMENT OF TRANSPORTATION

BRAINTREE DRIVE
EXISTING SIGNING PLAN

SCALE: 1"=50' | SHEET 4 OF 4 SHEETS | STA. 154+00.00 TO STA. 159+00.00

MUN RTE.	SECTION	COUNTY	TOTAL SHEETS	SHEET NO.
4029	23-00146-00-PV	COOK	315	156
		CONTRACT NO. 61M26		
		ILLINOIS	FED. AID PROJECT	

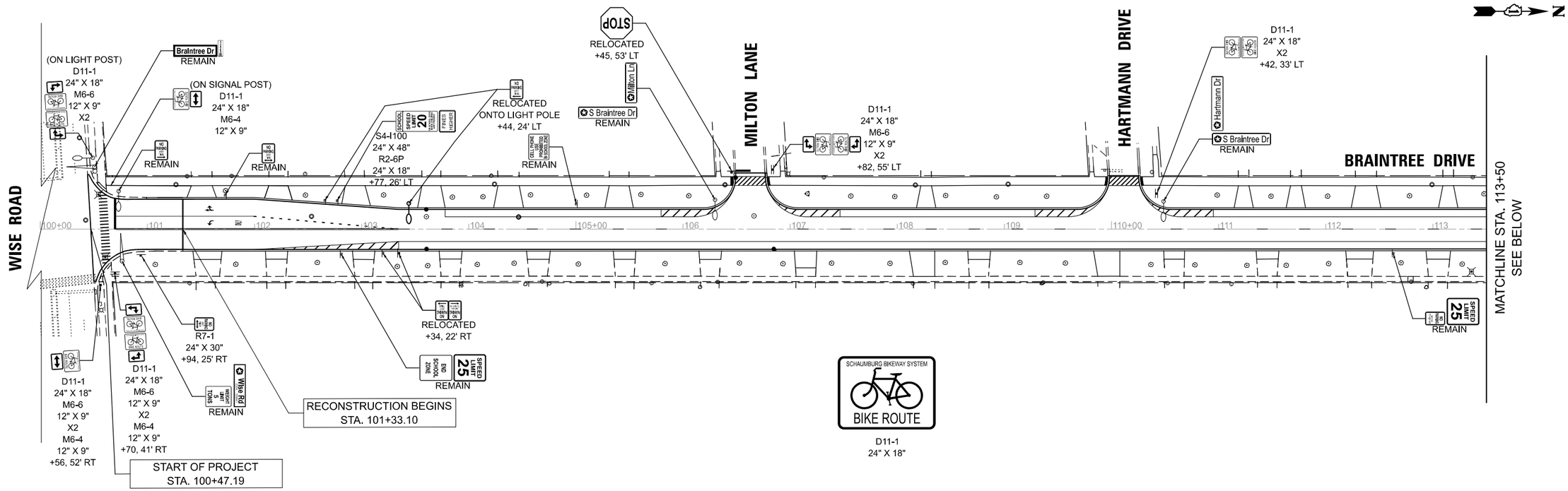

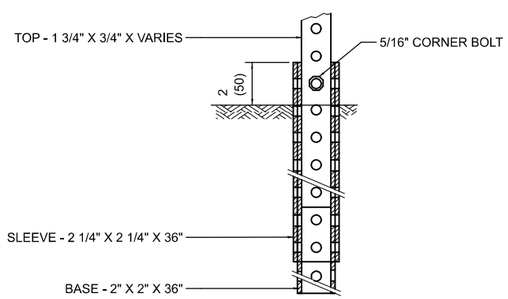

TELESCOPING STEEL SIGN SUPPORT (SPECIAL) MOUNT DETAIL

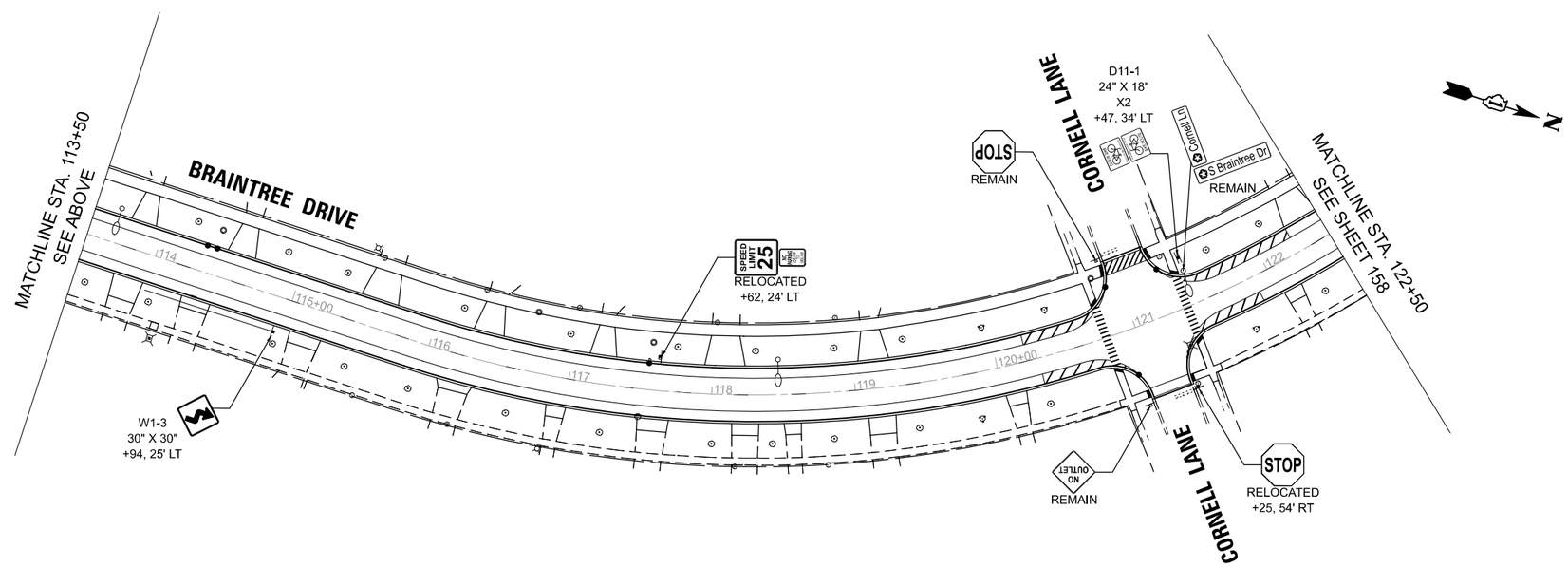

LEGEND

	EXISTING LIGHT POLE
	PROPOSED LIGHT POLE
	EXISTING SIGN TO REMAIN
	PROPOSED SIGN PANEL, TYPE 1 (SPECIAL) OR TYPE 2 (SPECIAL)
REMAIN	SIGN PANEL TO REMAIN IN SAME LOCATION
RELOCATED	SIGN PANEL TO BE RELOCATED

MODEL: Braintree - Plan 1 [Sheet]
FILE NAME: c:\bms\dvltech-pw\petro.kravets\d0140568\3993 Proposed Signing Sheets.dgn

USER NAME = pk	DESIGNED - AMP	REVISED -	STATE OF ILLINOIS DEPARTMENT OF TRANSPORTATION
	DRAWN - AMP	REVISED -	
	CHECKED - PK	REVISED -	
PLOT DATE = 12/15/2025	DATE - 12/12/2025	REVISED -	

BRAINTREE DRIVE
PROPOSED SIGNING PLAN

SCALE: 1"=50' | SHEET 1 OF 4 SHEETS | STA. 100+00.00 TO STA. 122+50.00

MUN RTE.	SECTION	COUNTY	TOTAL SHEETS	SHEET NO.
4029	23-00146-00-PV	COOK	315	157

CONTRACT NO. 61M26

ILLINOIS | FED. AID PROJECT

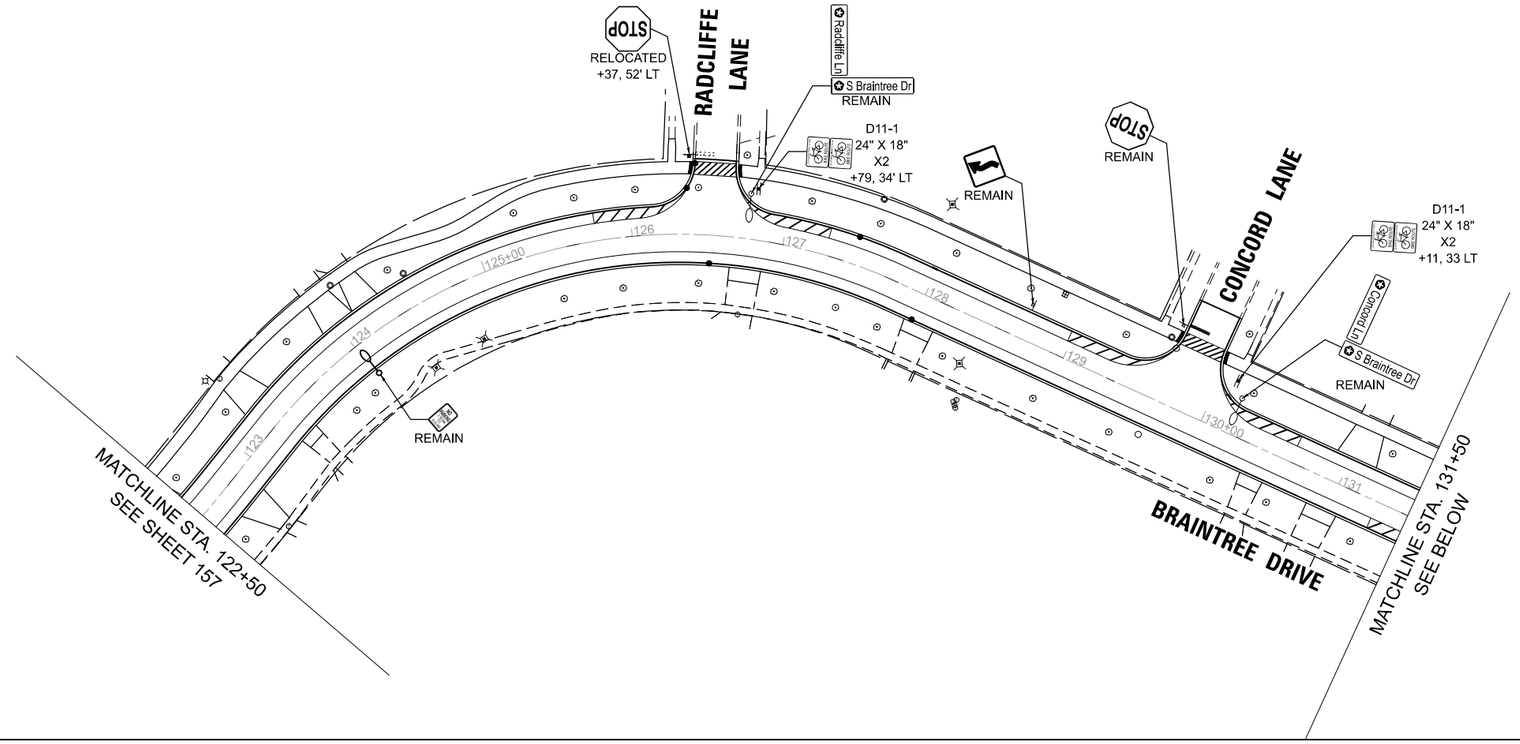

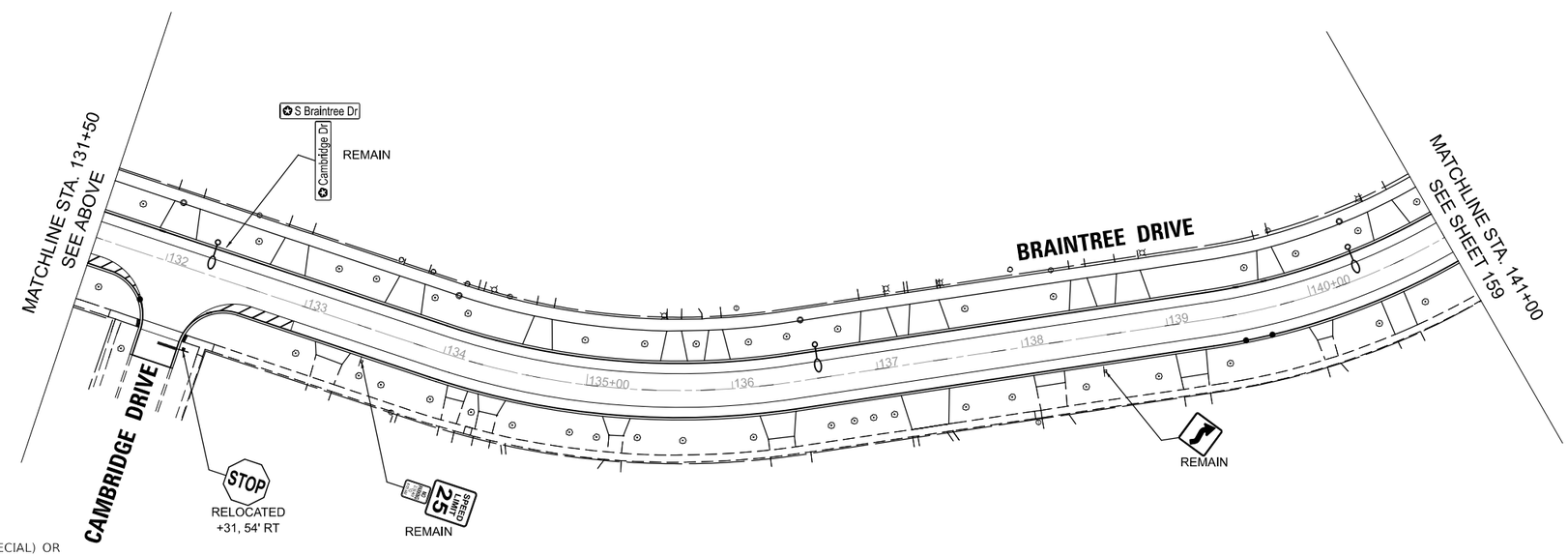

LEGEND

	EXISTING LIGHT POLE
	PROPOSED LIGHT POLE
	EXISTING SIGN TO REMAIN
	PROPOSED SIGN PANEL, TYPE 1 (SPECIAL) OR TYPE 2 (SPECIAL)
REMAIN	SIGN PANEL TO REMAIN IN SAME LOCATION
RELOCATED	SIGN PANEL TO BE RELOCATED

MODEL: Braintree - Plan 3 [Sheet]
FILE NAME: c:\bms\dwltech-pw\petro.kravets.d0140568\3993 Proposed Signing Sheets.dgn

USER NAME = pk	DESIGNED - AMP	REVISED -	
	DRAWN - AMP	REVISED -	
	CHECKED - PK	REVISED -	
PLOT DATE = 12/15/2025	DATE - 12/12/2025	REVISED -	

STATE OF ILLINOIS
DEPARTMENT OF TRANSPORTATION

BRAINTREE DRIVE
PROPOSED SIGNING PLAN

SCALE: 1"=50' | SHEET 2 OF 4 SHEETS | STA. 122+50.00 TO STA. 141+00.00

MUN RTE.	SECTION	COUNTY	TOTAL SHEETS	SHEET NO.
4029	23-00146-00-PV	COOK	315	158

CONTRACT NO. 61M26

ILLINOIS | FED. AID PROJECT

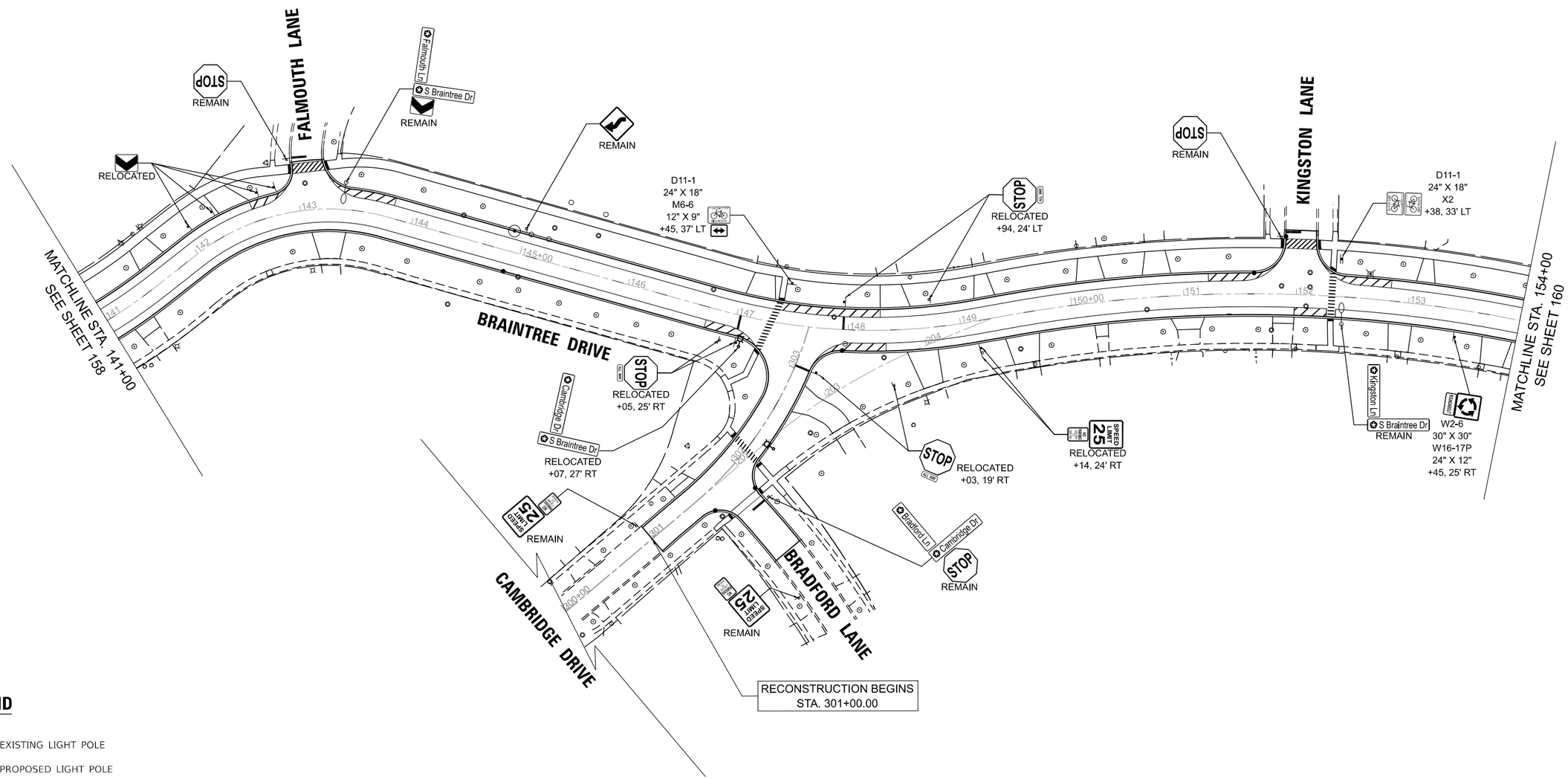

LEGEND

	EXISTING LIGHT POLE
	PROPOSED LIGHT POLE
	EXISTING SIGN TO REMAIN
	PROPOSED SIGN PANEL, TYPE 1 (SPECIAL) OR TYPE 2 (SPECIAL)
REMAIN	SIGN PANEL TO REMAIN IN SAME LOCATION
RELOCATED	SIGN PANEL TO BE RELOCATED

MODEL: Braintree-1 - Plan 5 [Sheet]
FILE NAME: c:\bms\dvlltech-pw\petro.kravets\d0140569\3993 Proposed Signing Sheets.dgn

USER NAME = pk	DESIGNED - AMP	REVISED -	
	DRAWN - AMP	REVISED -	
	CHECKED - PK	REVISED -	
PLOT DATE = 12/11/2025	DATE - 12/12/2025	REVISED -	

STATE OF ILLINOIS
DEPARTMENT OF TRANSPORTATION

BRAINTREE DRIVE
PROPOSED SIGNING PLAN

SCALE: 1"=50' | SHEET 3 OF 4 SHEETS | STA. 141+00.00 TO STA. 154+00.00

MUN RTE.	SECTION	COUNTY	TOTAL SHEETS	SHEET NO.
4029	23-00146-00-PV	COOK	315	159
		CONTRACT NO. 61M26		
		ILLINOIS	FED. AID PROJECT	

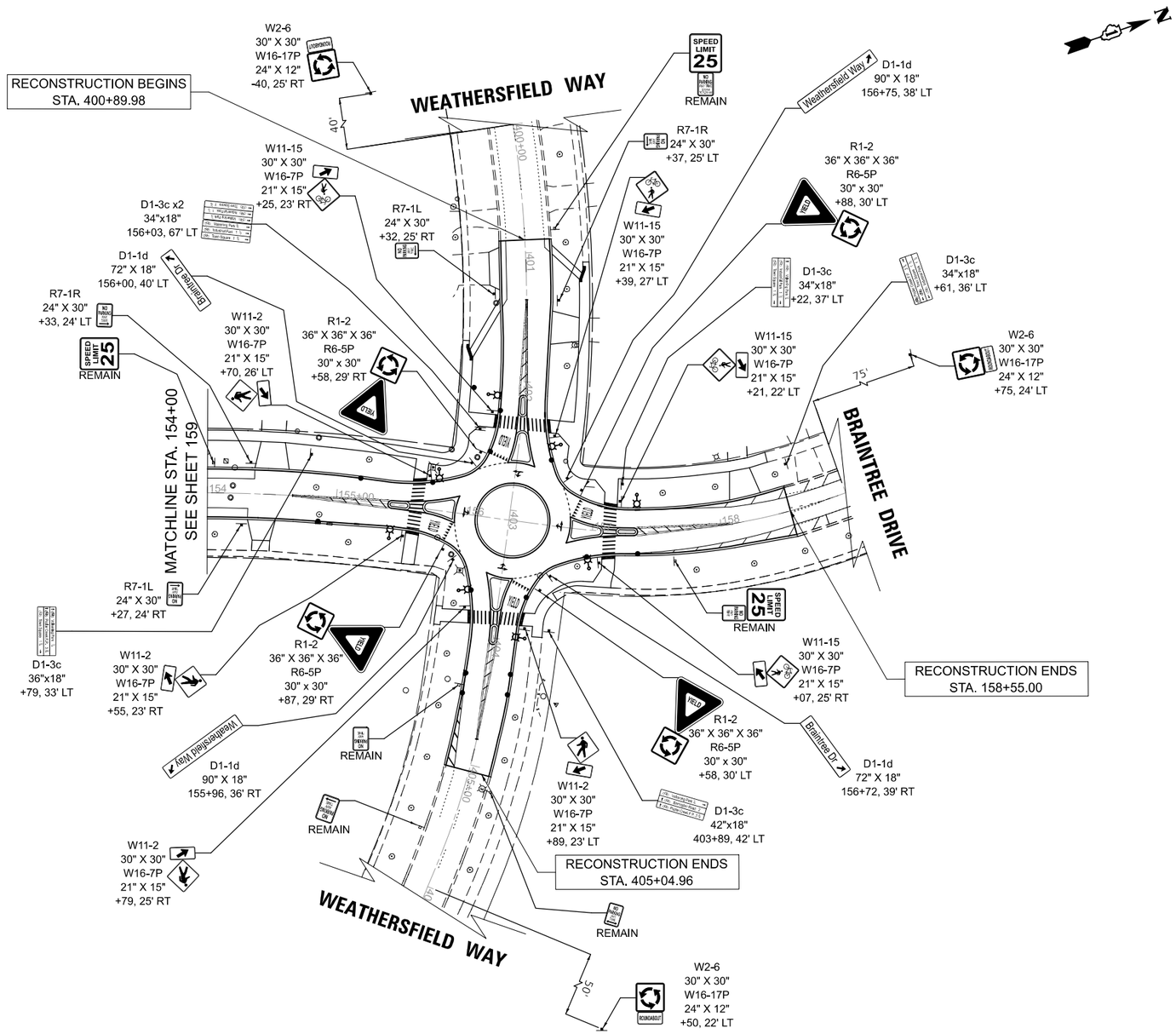

NOTES

1. ADDITIONAL BIKE ROUTE SIGNS TO BE ADDED PENDING ADDITIONAL PEDESTRIAN DESIGN AT ROUNDABOUT

LEGEND

	EXISTING LIGHT POLE
	PROPOSED LIGHT POLE
	EXISTING SIGN TO REMAIN
	PROPOSED SIGN PANEL, TYPE 1 (SPECIAL) OR TYPE 2 (SPECIAL)
REMAIN	SIGN PANEL TO REMAIN IN SAME LOCATION
RELOCATED	SIGN PANEL TO BE RELOCATED

MODEL: Braintree-1 - Plan 6 [Sheet]
FILE NAME: c:\bms\kiltech-pw\petro.kravets\d0140568\3993 Proposed Signing Sheets.dgn

USER NAME = pk	DESIGNED - AMP	REVISED -	STATE OF ILLINOIS DEPARTMENT OF TRANSPORTATION
	DRAWN - AMP	REVISED -	
	CHECKED - PK	REVISED -	
PLOT DATE = 12/15/2025	DATE - 12/12/2025	REVISED -	

BRAINTREE DRIVE
PROPOSED SIGNING PLAN

SCALE: 1"=50' | SHEET 4 OF 4 SHEETS | STA. 154+00.00 TO STA. 159+00.00

MUN RTE.	SECTION	COUNTY	TOTAL SHEETS	SHEET NO.
4029	23-00146-00-PV	COOK	315	160

CONTRACT NO. 61M26

ILLINOIS | FED. AID PROJECT

TRAFFIC SIGNAL LEGEND

(NOT TO SCALE)

ITEM	EXISTING	PROPOSED
CONTROLLER CABINET		
COMMUNICATION CABINET	CC	CC
MASTER CONTROLLER	MC	MC
MASTER MASTER CONTROLLER	MMC	MMC
UNINTERRUPTABLE POWER SUPPLY		
SERVICE INSTALLATION -(P) POLE MOUNTED	P	P
SERVICE INSTALLATION -(G) GROUND MOUNTED -(GM) GROUND MOUNTED METERED	G GM	G GM
TELEPHONE CONNECTION	ET	T
STEEL MAST ARM ASSEMBLY AND POLE		
ALUMINUM MAST ARM ASSEMBLY AND POLE		
STEEL COMBINATION MAST ARM ASSEMBLY AND POLE WITH LUMINAIRE		
SIGNAL POST -(BM) BARREL MOUNTED - TEMPORARY		BM
WOOD POLE		
GUY WIRE		
SIGNAL HEAD		
SIGNAL HEAD WITH BACKPLATE		
SIGNAL HEAD OPTICALLY PROGRAMMED	P P	P P
FLASHER INSTALLATION -(FS) SOLAR POWERED	F FS F FS	F FS F FS
PEDESTRIAN SIGNAL HEAD		
PEDESTRIAN PUSH BUTTON -(APS) ACCESSIBLE PEDESTRIAN PUSH BUTTON	APS	APS
RADAR DETECTION SENSOR	R	R
VIDEO DETECTION CAMERA	V	V
RADAR/VIDEO DETECTION ZONE		
PAN, TILT, ZOOM (PTZ) CAMERA	PTZ	PTZ
EMERGENCY VEHICLE LIGHT DETECTOR		
CONFIMATION BEACON		
WIRELESS INTERCONNECT		
WIRELESS INTERCONNECT RADIO REPEATER	ERR	RR

ITEM	EXISTING	PROPOSED
HANDHOLE -SQUARE -ROUND		
HEAVY DUTY HANDHOLE -SQUARE -ROUND	H H	H H
DOUBLE HANDHOLE		
JUNCTION BOX	J	J
RAILROAD CANTILEVER MAST ARM		
RAILROAD FLASHING SIGNAL		
RAILROAD CROSSING GATE		
RAILROAD CROSSBUCK		
RAILROAD CONTROLLER CABINET		
UNDERGROUND CONDUIT (UC), GALVANIZED STEEL		
TEMPORARY SPAN WIRE, TETHER WIRE, AND CABLE		
SYSTEM ITEM	S	SP
INTERSECTION ITEM	I	IP
REMOVE ITEM		R
RELOCATE ITEM		RL
ABANDON ITEM		A
CONTROLLER CABINET AND FOUNDATION TO BE REMOVED		RCF
MAST ARM POLE AND FOUNDATION TO BE REMOVED		RMF
SIGNAL POST AND FOUNDATION TO BE REMOVED		RPF
DETECTOR LOOP, TYPE I		
PREFORMED DETECTOR LOOP	P P	P P
SAMPLING (SYSTEM) DETECTOR	S S	S S
INTERSECTION AND SAMPLING (SYSTEM) DETECTOR	IS IS	IS IS
QUEUE AND SAMPLING (SYSTEM) DETECTOR	QS QS	QS QS
WIRELESS DETECTOR SENSOR	W	W
WIRELESS ACCESS POINT		

ITEM	EXISTING	PROPOSED
SIGNAL HEAD -(P) PROGRAMMABLE SIGNAL HEAD	R Y G Y G P	R Y G Y G P
SIGNAL HEAD WITH BACKPLATE -(P) PROGRAMMABLE SIGNAL HEAD -(RB) RETROREFLECTIVE BACKPLATE	R Y G Y G P RB	R Y G Y G P RB
PEDESTRIAN SIGNAL HEAD AT RAILROAD INTERSECTIONS		
PEDESTRIAN SIGNAL HEAD WITH COUNTDOWN TIMER	C D	C D
ILLUMINATED SIGN "NO LEFT TURN"/"NO RIGHT TURN"		
NUMBER OF CONDUCTORS, ELECTRIC CABLE NO. 14, UNLESS NOTED OTHERWISE. ALL DETECTOR LOOP CABLE TO BE SHIELDED	5	5
GROUND CABLE IN CONDUIT, NO. 6 SOLID COPPER (GREEN)	1#6	1#6
ELECTRIC CABLE IN CONDUIT, TRACER NO. 14 1/C	1	1
COAXIAL CABLE	C	C
VENDOR CABLE	V	V
COPPER INTERCONNECT CABLE, NO. 18, 3 PAIR TWISTED, SHIELDED	6#18	6#18
FIBER OPTIC CABLE -NO. 62.5/125, MM12F -NO. 62.5/125, MM12F SM12F -NO. 62.5/125, MM12F SM24F	12F 24F 36F	12F 24F 36F
GROUND ROD -(C) CONTROLLER -(M) MAST ARM -(P) POST -(S) SERVICE	C M P S	C M P S

MODEL: Default
FILE NAME: pw:\\IL084EBIDINTEG.illinois.gov:PWIDOT\Documents\IDOT Offices\District 1\Projects\Std\Std22x34\CADData\CADsheets\ts05.dgn

USER NAME = footemj	DESIGNED - IP	REVISED -	STATE OF ILLINOIS DEPARTMENT OF TRANSPORTATION
	DRAWN - IP	REVISED -	
PLOT SCALE = 50.0000 ' / in.	CHECKED - LP	REVISED -	
PLOT DATE = 3/4/2019	DATE - 9/29/2016	REVISED -	

DISTRICT ONE
STANDARD TRAFFIC SIGNAL DESIGN DETAILS

SCALE: NONE | SHEET 1 OF 7 SHEETS | STA. TO STA.

MUN RTE.	SECTION	COUNTY	TOTAL SHEETS	SHEET NO.
4029	23-00146-00-PV	COOK	315	161
	TS–05	CONTRACT NO.61M26		
		ILLINOIS	FED. AID PROJECT	

ts05.dgn 3/4/2019 11:21:59 AM User=footemj

LOOP DETECTOR NOTES

1. EACH PAIR OF LOOP WIRES SHALL BE PLACED IN A SEPARATE EMPTY COILABLE NONMETALLIC CONDUIT FROM THE EDGE OF PAVEMENT TO THE HANDHOLE. SPACING BETWEEN THE HOLES DRILLED IN THE PAVEMENT SHALL NOT BE LESS THAN 6" (150 mm). EMPTY COILABLE NONMETALLIC CONDUIT SHALL BE INCLUDED IN THE COST OF THE LOOP WIRE.

2. THE NUMBER OF LOOP TURNS SHALL BE AS RECOMMENDED BY THE AMPLIFIER MANUFACTURER. ALL ADJACENT SIDES OF THE LOOPS SHALL BE INSTALLED IN SUCH A WAY THAT THE CURRENT FLOW IS IN THE SAME DIRECTION TO REINFORCE ITS MAGNETIC FIELDS FOR SMALL VEHICLE DETECTION.

3. EACH LOOP LEAD-IN SHALL BE IDENTIFIED AND PERMANENTLY TAGGED IN THE HANDHOLE. EACH LEAD-IN CABLE TAG SHALL INDICATE THE LOCATION OF THE LOOP, LOOP ROTATION (CLOCKWISE/COUNTERCLOCKWISE), LOOP LEAD-IN DIRECTION (IN OR OUT), LOOP CABLE NUMBER AND LOCATION IN CABINET, AND NUMBER OF TURNS IN THE DETECTOR LOOPS IN WATER PROOF INK AS INDICATED ON THE DISTRICT 1 STANDARD TRAFFIC SIGNAL DESIGN DETAIL. THE CONTRACTOR SHALL MARK LOOP LOCATIONS ON RECORD DRAWINGS AND PRESENT TO THE ENGINEER AFTER FINAL INSPECTION. LOOPS SHALL BE MARKED BY LANE AND LOOP NUMBER. SEE DETAIL BELOW.

4. ALL LOOP CABLE SHALL BE FASTENED WITH PLASTIC TIE WRAP TO THE HANDHOLE HOOKS.

5. IN ASPHALT PAVEMENT, LOOPS SHOULD BE PLACED IN THE BINDER AND DIVEHOLES MARKED AT THE CURB WITH A SAW-CUT. THE SAW-CUT SHALL BE CUT IN ACCORDANCE WITH LOCAL AND E.P.A. DUST CONTROL REQUIREMENTS. DETECTOR LOOP(S) SHALL NOT BE INSTALLED IN WET CONDITIONS AND THE SAW-CUTS MUST BE FREE OF DEBRIS AND RESIDUE SUCH AS DUST AND WATER WHICH IS TO BE ACHIEVED BY THE USE OF COMPRESSED AIR, WIRE BRUSHING AND HEAT DRYING ACCORDING TO SEALANT MANUFACTURER REQUIREMENTS. THE DETECTOR WIRE SHALL BE HELD IN PLACE BY THE USE OF FORM WEDGES. WEDGES SHALL BE SPACED NO MORE THAN 18" (450 mm) APART.

6. LOOP SPLICES SHALL BE SOLDERED USING A SOLDERING IRON. BLOW TORCHES OR OTHER DEVICES WHICH OXIDIZE COPPER CABLE SHALL NOT BE ALLOWED FOR SOLDERING OPERATIONS. SEE DETAIL BELOW RIGHT.

7. PREFORMED DETECTOR LOOPS SHALL BE USED, AS SHOWN ON THE PLANS, WHERE NEW CONCRETE PAVEMENT IS PROPOSED. THE INSTALLATION OF PREFORMED LOOPS SHALL BE IN ACCORDANCE WITH THE DISTRICT 1 SPECIFICATIONS OR AS DIRECTED BY THE ENGINEER.

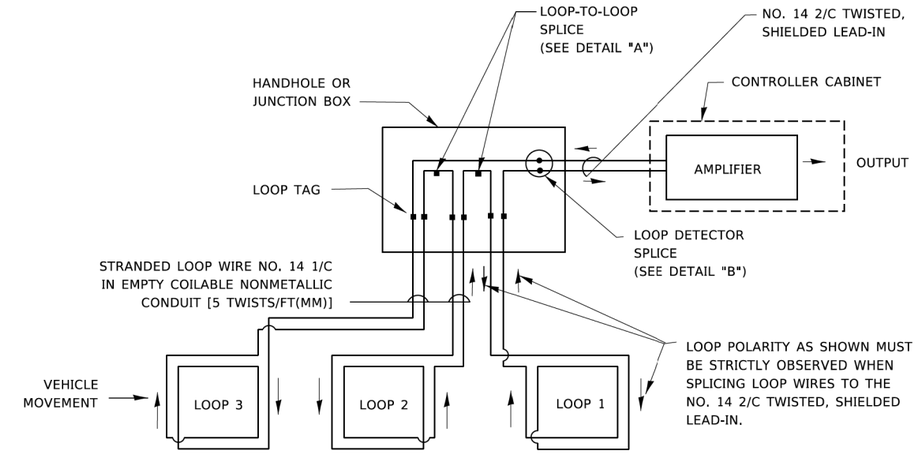

DETECTOR LOOP WIRING SCHEMATIC

- LOOPS SHALL BE SPLICED IN SERIES. SAW-CUTS SHALL BE A MINIMUM WIDTH OF 5/16" (8 mm).
- SAW-CUT DEPTHS SHALL BE 3" (75 mm). IF IN CONCRETE,
- THE SAW-CUT DEPTH SHALL BE TO THE TOP OF THE REINFORCEMENT.
- LOOP CORNERS SHALL BE DRILLED WITH A 2" (50 mm) DIAMETER CORE.

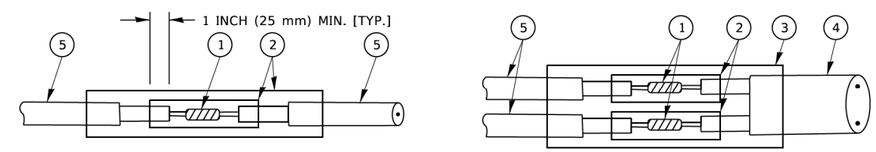

DETAIL "A"
LOOP-TO-LOOP SPLICE

DETAIL "B"
LOOP-TO-CONTROLLER SPLICE

TYPE I LOOP

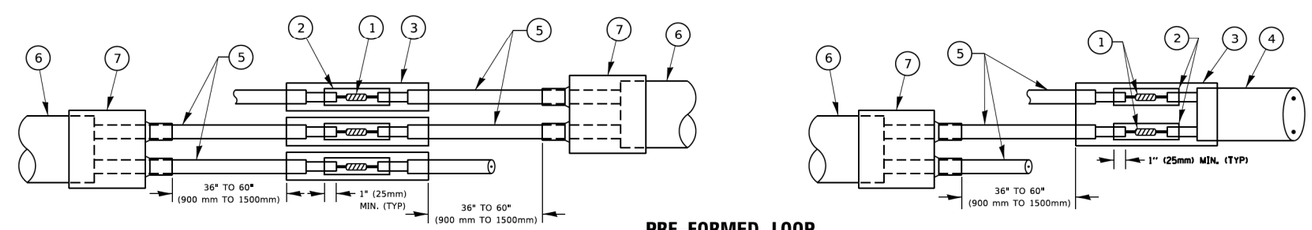

DETAIL "A"
LOOP-TO-LOOP SPLICE

PRE-FORMED LOOP

DETAIL "B"
LOOP-TO-CONTROLLER SPLICE

LOOP LEAD-IN CABLE TAG

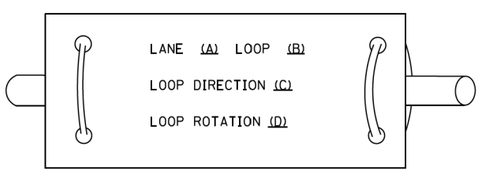

A. LANE 1 IS THE LANE CLOSEST TO THE CENTERLINE OF THE ROADWAY
B. LOOP #1 IS THE LOOP IN THE LANE CLOSEST TO THE INTERSECTION.
C. LABEL LOOP CABLE "IN" OR LOOP CABLE "OUT".
D. LABEL LOOP CABLE CLOCKWISE OR LOOP CABLE COUNTERCLOCKWISE.

LOOP DETECTOR SPLICE

1. WESTERN UNION SPLICE SOLDERED WITH ROSIN CORE FLUX. ALL EXPOSED SURFACES OF THE SOLDER SHALL BE SMOOTH. THE WESTERN UNION SPLICES SHALL BE STAGGERED.
2. WCSMW 30/100 HEAT SHRINK TUBE, MINIMUM LENGTH 3" (75 mm), UNDERWATER GRADE.
3. WCS 200/750 HEAT SHRINK TUBE, MINIMUM LENGHT 6" (150 mm), UNDERWATER GRADE.
4. NO. 14 2/C TWISTED, SHIELDED CABLE.
5. LOOP CONDUCTOR WITH FLEXIBLE PLASTIC TUBE. PRE-FORMED LOOP
6. XL POLYOLEFIN 2 CONDUCTOR
7. BREAKOUT SEALS. TYCO CBR-2 OR APPROVED EQUAL

MODEL: Default
FILE NAME: pw:\\IL0844BIDINTEG.illinois.gov:PWIDOT\Documents\IDOT Offices\District 1\Projects\Dist5\d22x34\CADData\CADsheets\ts05.dgn

USER NAME = footemj	DESIGNED -	REVISED -	
	DRAWN -	REVISED -	
PLOT SCALE = 50.0000 ' / in.	CHECKED -	REVISED -	
PLOT DATE = 3/4/2019	DATE -	REVISED -	

STATE OF ILLINOIS
DEPARTMENT OF TRANSPORTATION

DISTRICT ONE
STANDARD TRAFFIC SIGNAL DESIGN DETAILS

SCALE: NONE | SHEET 2 OF 7 SHEETS | STA. TO STA.

MUN RTE.	SECTION	COUNTY	TOTAL SHEETS	SHEET NO.
4029	23-00146-00-PV	COOK	315	162
	TS-05	CONTRACT NO.61M26		
		ILLINOIS FED. AID PROJECT		

ts05.dgn 3/4/2019 11:22:18 AM User=footemj

TRAFFIC SIGNAL MAST ARM AND SIGNAL POST

MAST ARM MOUNTED SIGNALS IN EXISTING, PROPOSED OR FUTURE SIDEWALK/BICYCLE PATH AREA. INTERSECTION SHOWN WITH PEDESTRIAN SIGNALS AND PEDESTRIAN PUSHBUTTON DETECTORS.

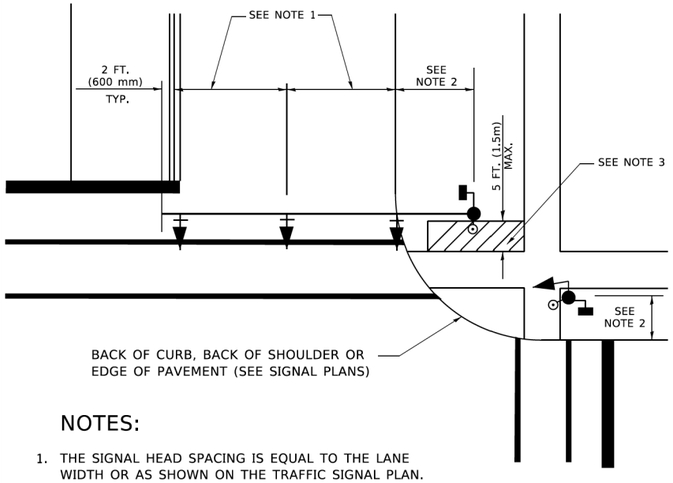

NOTES:

1. THE SIGNAL HEAD SPACING IS EQUAL TO THE LANE WIDTH OR AS SHOWN ON THE TRAFFIC SIGNAL PLAN.
2. REFER TO THE TRAFFIC SIGNAL EQUIPMENT OFFSET TABLE.
3. PROVIDE A LEVEL ALL-WEATHER SURFACE (CONCRETE SIDEWALK, ASPHALT BICYCLE PATH SURFACE OR MATCHING MATERIAL TO THE ADJACENT SURFACE) UP TO THE MAST ARM SHAFT OR THE SIGNAL POST.
4. THE FACE OF THE PEDESTRIAN PUSHBUTTON SHALL BE PARALLEL TO THE CROSSWALK TO BE USED.
5. THE LOCATIONS AND INSTALLATION OF PEDESTRIAN SIGNAL HEADS AND PEDESTRIAN PUSHBUTTONS SHALL MEET THE REQUIREMENTS OF THE MUTCD AND INFORMATION FOUND IN THE "AMERICANS WITH DISABILITIES ACT ACCESSIBILITY GUIDELINES FOR BUILDINGS AND FACILITIES."

PEDESTRIAN SIGNAL POST AND PEDESTRIAN PUSH BUTTON POST

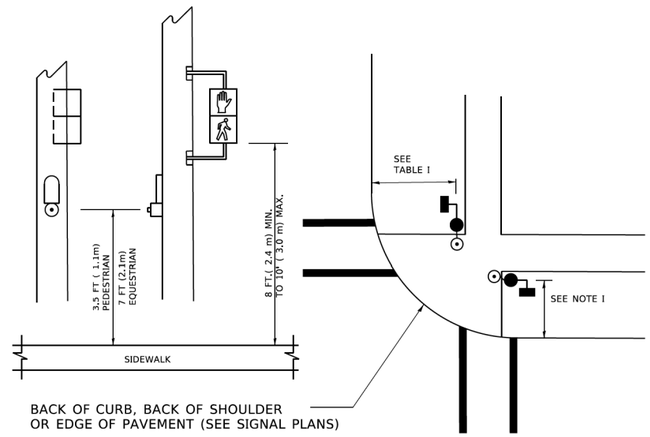

NOTES:

1. REFER TO THE TRAFFIC SIGNAL EQUIPMENT OFFSET TABLE.
2. PROVIDE A LEVEL ALL-WEATHER SURFACE (CONCRETE SIDEWALK, ASPHALT BICYCLE PATH SURFACE OR MATCHING MATERIAL TO THE ADJACENT SURFACE) UP TO THE PEDESTRIAN SIGNAL POST OR THE PEDESTRIAN PUSH BUTTON POST.
3. THE FACE OF THE PEDESTRIAN PUSHBUTTON SHALL BE PARALLEL TO THE CROSSWALK TO BE USED.
4. THE LOCATIONS AND INSTALLATION OF PEDESTRIAN SIGNAL HEADS AND PEDESTRIAN PUSHBUTTONS SHALL MEET THE REQUIREMENTS OF THE MUTCD AND INFORMATION FOUND IN THE "AMERICANS WITH DISABILITIES ACT ACCESSIBILITY GUIDELINES FOR BUILDINGS AND FACILITIES."

RECOMMENDED PUSHBUTTON LOCATIONS

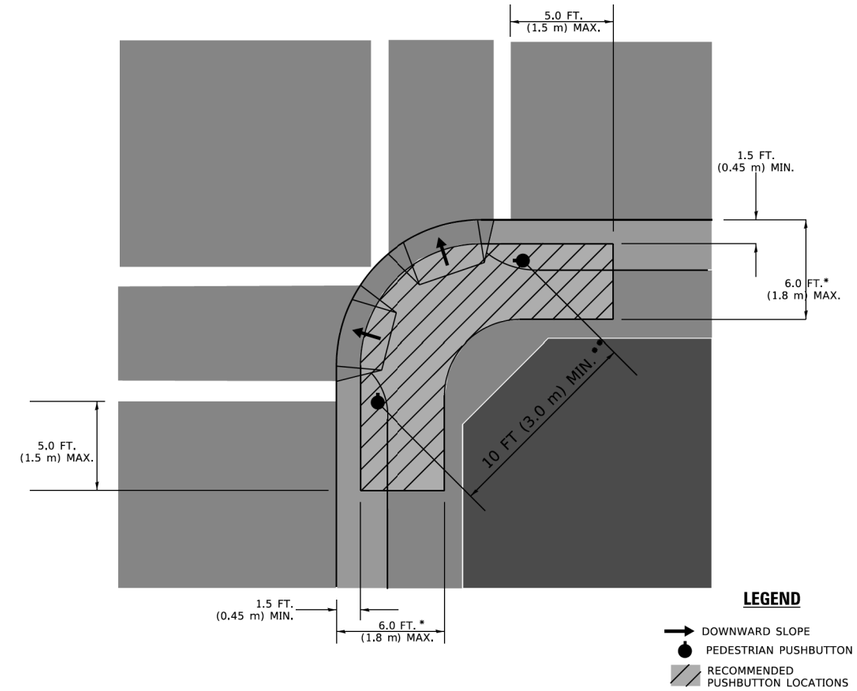

* WHERE THERE ARE CONSTRAINTS THAT MAKE IT IMPRACTICAL TO PLACE THE PEDESTRIAN PUSHBUTTON BETWEEN 1.5 FT (0.45 m) AND 6 FT (1.8 m) FROM THE EDGE OF THE CURB, SHOULDER, OR PAVEMENT, IT SHOULD NOT BE FURTHER THAN 10 FT (3 m) FROM THE EDGE OF CURB, SHOULDER, OR PAVEMENT.

** WHERE THERE ARE CONSTRAINTS ON A PARTICULAR CORNER THAT MAKE IT IMPRACTICAL TO PROVIDE THE 10 FT (3 m) SEPERATION BETWEEN THE TWO PEDESTRIAN PUSHBUTTONS, THE PUSHBUTTONS MAY BE PLACED CLOSER TOGETHER OR ON THE SAME POLE.

NOTES:

1. PEDESTRIAN SIGNAL HEADS SHALL BE MOUNTED WITH THE BOTTOM OF THE SIGNAL HOUSING INCLUDING BRACKETS NOT LESS THAN 8 FT (2.4 m) OR MORE THAN 10 FT (3 m) ABOVE SIDEWALK LEVEL, AND SHALL BE POSITIONED AND ADJUSTED TO PROVIDE MAXIMUM VISIBILITY AT THE BEGINNING OF THE CONTROLLED CROSSWALK.
2. THE BOTTOM OF THE SIGNAL HOUSING (INCLUDING BRACKETS) OF A VEHICULAR SIGNAL FACE THAT IS NOT LOCATED OVER A HIGHWAY SHALL BE AT LEAST 8 FT (2.4 m) BUT NOT MORE THAN 19 FT (5.8 m) ABOVE THE SIDEWALK OR, IF THERE IS NO SIDEWALK, ABOVE THE PAVEMENT GRADE AT THE CENTER OF THE ROADWAY.
3. THE BOTTOM OF THE SIGNAL HOUSING AND ANY RELATED ATTACHMENTS TO A SIGNAL FACE LOCATED OVER ANY PORTION OF A HIGHWAY SHALL BE ACCORDING TO CURRENT STATE STANDARDS 877001, 877002, 877006, 877011 AND 877012 WITH A MINIMUM OF 16 FT (5.0 m) AND A MAXIMUM OF 18 FT. (5.5 m) FROM THE HIGHEST POINT OF PAVEMENT.
4. THE BOTTOM OF THE TEMPORARY SPAN WIRE MOUNTED SIGNAL HOUSING AND ANY RELATED ATTACHMENTS TO A SIGNAL FACE LOCATED OVER ANY PORTION OF A HIGHWAY SHALL BE ACCORDING TO CURRENT STATE STANDARD 880001 WITH A MINIMUM OF 17 FT (5.18 m) FROM THE HIGHEST POINT OF PAVEMENT.
5. THE TOP OF THE SIGNAL HOUSING OF A SIGNAL FACE LOCATED OVER ANY PORTION OF A HIGHWAY SHALL NOT BE MORE THAN 25.6 FT (7.8 m) ABOVE THE PAVEMENT.

TRAFFIC SIGNAL EQUIPMENT OFFSET

TRAFFIC SIGNAL EQUIPMENT	COMBINATION CONCRETE CURB AND GUTTER (MINIMUM DISTANCE FROM BACK OF CURB TO CENTERLINE OF FOUNDATION)	SHOULDER/NON-CURBED AREA (MINIMUM DISTANCE FROM EDGE OF PAVEMENT TO CENTERLINE OF FOUNDATION)
TRAFFIC SIGNAL MAST ARM POLE	6 FT (1.8m)	SHOULDER WIDTH + 2 FT (0.6m), MINIMUM 10 FT (3.0m)
TRAFFIC SIGNAL POST	4 FT (1.2m)	SHOULDER WIDTH + 2 FT (0.6m), MINIMUM 10 FT (3.0m)
PEDESTRIAN SIGNAL POST	4 FT (1.2m)	SHOULDER WIDTH + 2 FT (0.6m), MINIMUM 10 FT (3.0m)
PEDESTRIAN PUSHBUTTON POST	4 FT (1.2m)	SHOULDER WIDTH + 2 FT (0.6m), MINIMUM 10 FT (3.0m)
TEMPORARY WOOD POLE	6 FT (1.8m)	SHOULDER WIDTH + 2 FT (0.6m), MINIMUM 10 FT (3.0m)
CONTROLLER CABINET	6 FT (1.8m) MINIMUM DISTANCE SEE NOTE 2	SHOULDER WIDTH + 6 FT (1.8m), MINIMUM 16 FT (4.9m) SEE NOTE 3.
SERVICE INSTALLATION, GROUND MOUNT	6 FT (1.8m) MINIMUM DISTANCE SEE NOTE 2	SHOULDER WIDTH + 6 FT (1.8m), MINIMUM 16 FT (4.9m) SEE NOTE 3.

NOTES:

1. CONTACT THE "AREA TRAFFIC SIGNAL MAINTENANCE AND OPERATIONS ENGINEER" FOR ASSISTANCE IN LOCATING THE TRAFFIC SIGNAL EQUIPMENT WHEN THERE ARE CONFLICTS WITH DITCHES OR THE MINIMUM OFFSET DISTANCES CANNOT BE MET.
2. MINIMUM DISTANCE FROM THE BACK OF CURB TO THE ROADWAY SIDE OF THE FOUNDATION.
3. MINIMUM DISTANCE FROM THE EDGE OF PAVEMENT TOTHE ROADWAY SIDE OF THE FOUNDATION.
4. ANY CHANGES TO THE OFFSETS OF THE FOUNDATIONS, FROM THE MINIMUM DISTANCES LISTED IN THE "TRAFFIC SIGNAL EQUIPMENT OFFSET" CHART AND THE TRAFFIC SIGNAL INSTALLATION PLAN, COULD EFFECT THE PLACEMENT OF THE SIGNAL HEADS, PEDESTRIAN SIGNAL HEADS AND THE PEDESTRIAN PUSHBUTTONS. THE SIGNAL HEAD PLACEMENT ON THE MAST ARMS SHALL REMAIN AS PER THE TRAFFIC SIGNAL INSTALLATION PLAN AND THE "TRAFFIC SIGNAL MAST ARM AND SIGNAL POST" DETAIL ABOVE. THE PROPOSED MAST ARM LENGTHS MAY NEED TO BE REVISED TO MEET THE ABOVE REQUIREMENTS. THE PEDESTRIAN SIGNAL HEADS AND PEDESTRIAN PUSHBUTTONS MUST MEET THE REQUIREMENTS UNDER THE DETAILS ON THIS SHEET.

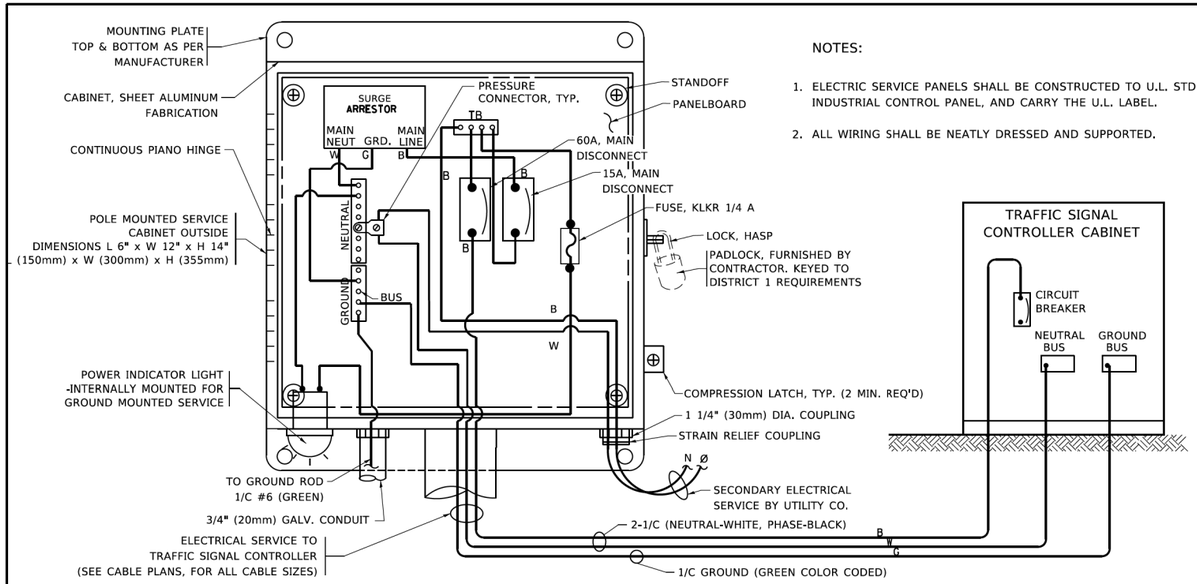

NOTES:

1. ELECTRIC SERVICE PANELS SHALL BE CONSTRUCTED TO U.L. STD 508, INDUSTRIAL CONTROL PANEL, AND CARRY THE U.L. LABEL.
2. ALL WIRING SHALL BE NEATLY DRESSED AND SUPPORTED.

ELECTRICAL SERVICE – PANEL DIAGRAM (TYPICAL FOR POLE AND GROUND MOUNTED SERVICE)

SERVICE INSTALLATION POLE MOUNT (SHOWN)

(NOT TO SCALE)

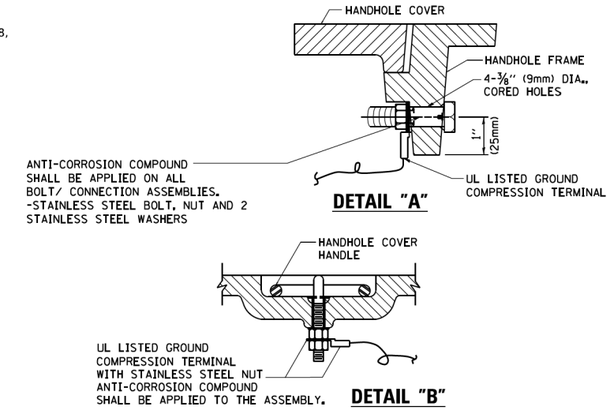

NOTES:

GROUNDING SYSTEM

1. THE GROUNDING SYSTEM SHALL CONSIST OF AN INSULATED CONDUCTOR TYPE XLP, NO. 6 A.W.G., STRANDED COPPER TO BE INSTALLED IN RACEWAYS. THE GROUNDING CABLE SHALL BE INSTALLED IN A CONTINUOUS MANNER AS SHOWN ON THE CABLE PLAN PROVIDED. ALL GROUNDING CONDUCTORS SHALL BE BONDED TO METAL ENCLOSURE (HANDHOLE, POST, MAST ARM, CONTROLLER, ETC,). GROUND ROD SHALL BE 3/4" DIA. x 10'-0" (20mm x 3.0m) LONG, COPPER CLAD. ONE GROUND ROD SHALL BE INSTALLED AT ALL POST FOUNDATIONS, POLE FOUNDATIONS, CONTROLLER CABINET FOUNDATION AND ELECTRICAL SERVICE INSTALLATION AS INDICATED ON THE CABLE PLAN. IF THERE ARE ANY SPECIAL CONDITIONS SUCH AS SUB-SURFACE CONDITIONS OR INSTALLATION PROBLEMS, THE RESIDENT ENGINEER SHALL BE NOTIFIED OR CONTACT THE BUREAU OF TRAFFIC, ILLINOIS DEPARTMENT OF TRANSPORTATION DISTRICT ONE AT (847) 705-4139.
2. THE NEUTRAL CONDUCTOR AND THE GROUND CONDUCTOR SHALL BE CONNECTED IN THE SERVICE INSTALLATION. AT NO OTHER POINT IN THE TRAFFIC SIGNAL SYSTEM SHALL THE NEUTRAL AND GROUND CONDUCTORS BE CONNECTED.
3. ALL EQUIPMENT GROUNDING CONDUCTORS SHALL TERMINATE AT THE GROUND BUS IN THE CONTROLLER CABINET.
4. THE CONTRACTOR SHALL PROVIDE A GROUND CABLE WITH CONNECTORS BETWEEN THE HANDHOLE COVER AND HANDHOLE FRAME.

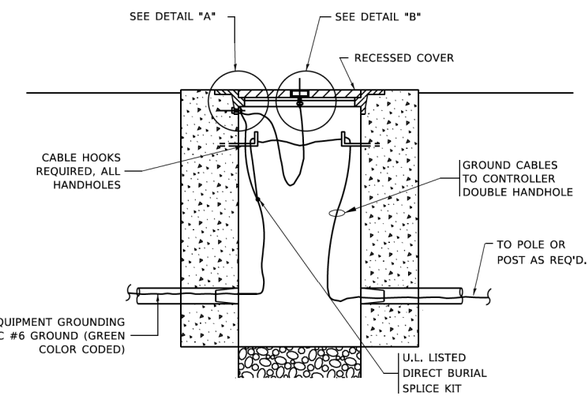

HANDHOLE COVER & FRAME – GROUNDING DETAIL

(NOT TO SCALE)

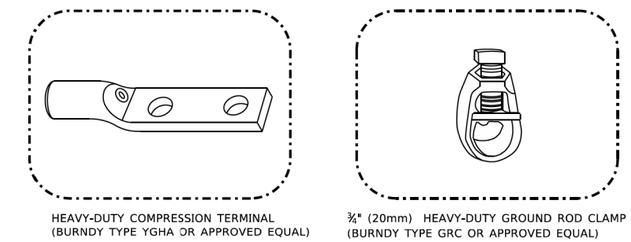

NOTES:

- ALL CLAMPS SHALL BE BRONZE OR COPPER, UL APPROVED.
- GROUND CABLE SHALL BE LOOPED OVER HOOKS IN THE HANDHOLES
  6.5' (2.0m) SLACK SHALL BE PROVIDED IN SINGLE HANDHOLES
  13' (4.0m) OF SLACK SHALL BE PROVIDED IN DOUBLE HANDHOLES.
  5' (1.4m) OF SLACK SHALL BE PROVIDED BETWEEN FRAME AND COVER.

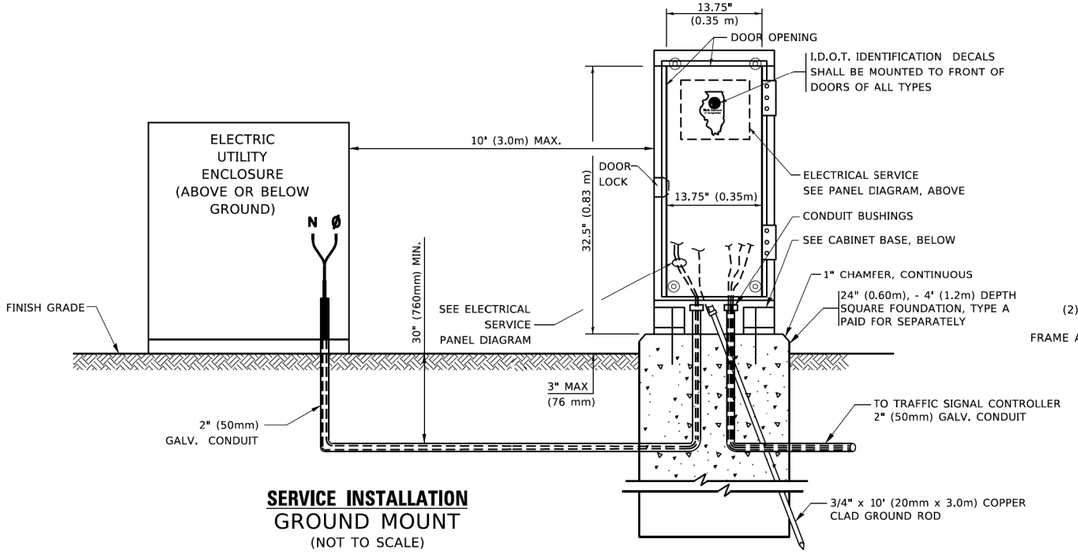

SERVICE INSTALLATION

GROUND MOUNT

(NOT TO SCALE)

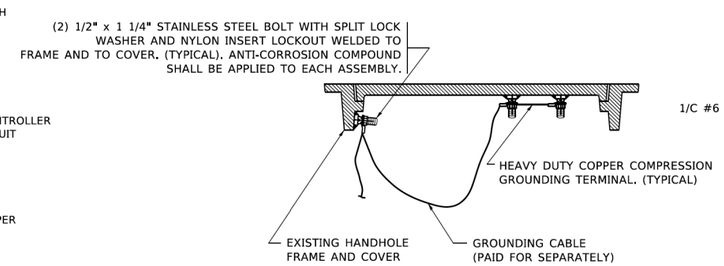

EXISTING HANDHOLE COVER & FRAME – GROUNDING DETAIL

(NOT TO SCALE)

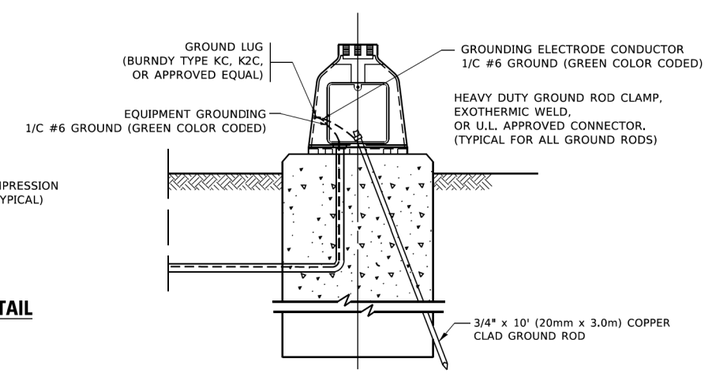

MAST ARM POLE /POST–GROUNDING DETAIL

(NOT TO SCALE)

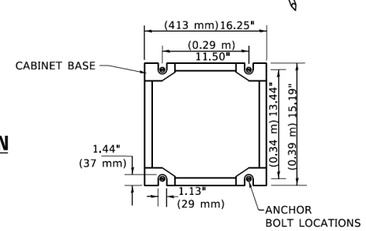

CABINET – BASE BOLT PATTERN

(NOT TO SCALE)

MODEL: Default
FILE NAME: pw:\\IL084EBIDINTEG.illinois.gov:PWIDOT\Documents\IDOT Offices\District 1\Projects\DistStd22x34\CADData\CADsheets\ts05.dgn

USER NAME = footemj	DESIGNED -	REVISED -	
	DRAWN -	REVISED -	
PLOT SCALE = 50.0000 ' / in.	CHECKED -	REVISED -	
PLOT DATE = 3/4/2019	DATE -	REVISED -	

STATE OF ILLINOIS
DEPARTMENT OF TRANSPORTATION

DISTRICT ONE
STANDARD TRAFFIC SIGNAL DESIGN DETAILS

SCALE: NONE | SHEET 4 OF 7 SHEETS | STA. TO STA.

MUN RTE.	SECTION	COUNTY	TOTAL SHEETS	SHEET NO.
4029	23-00146-00-PV	COOK	315	164
	TS–05	CONTRACT NO.61M26		
		ILLINOIS	FED. AID PROJECT	

ts05.dgn 3/4/2019 11:23:10 AM User=footemj

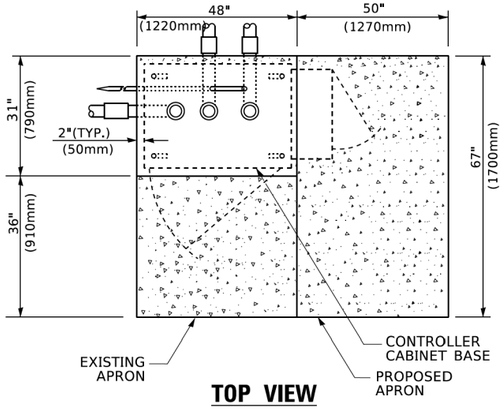

TOP VIEW

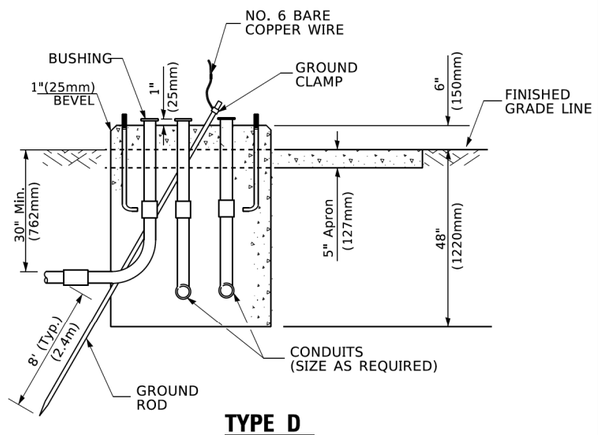

TYPE D
FOR GROUND MOUNTED
CONTROLLER CABINET
AND UPS BATTERY CABINET

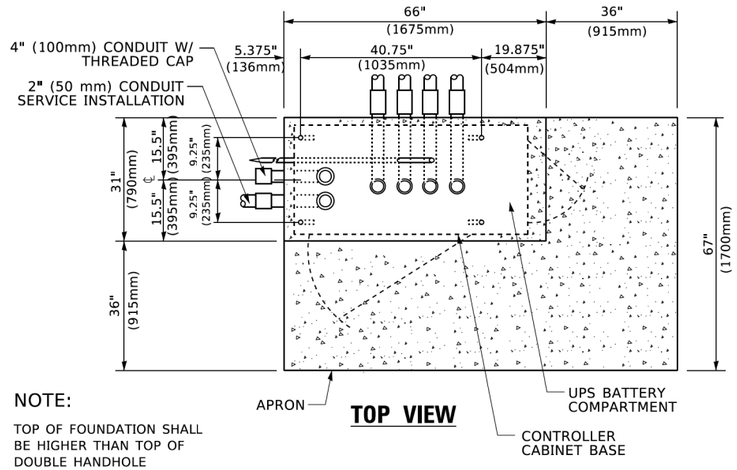

NOTE:

TOP OF FOUNDATION SHALL BE HIGHER THAN TOP OF DOUBLE HANDHOLE

TOP VIEW

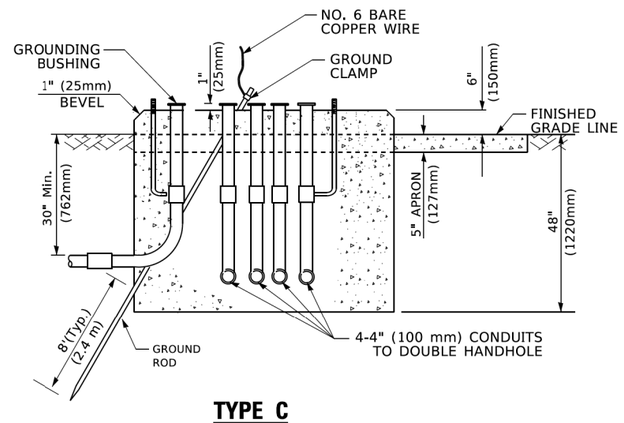

TYPE C
FOR GROUND MOUNTED
SUPER P (TYPE IV) AND SUPER R (TYPE V)
CONTROLLER CABINETS

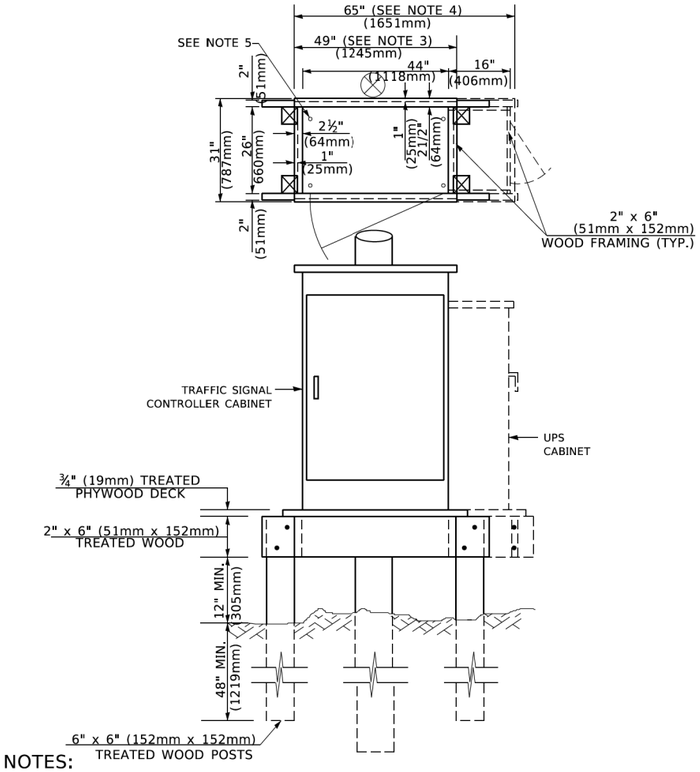

NOTES:

1. BASED ON CONTROLLER CABINET TYPE IV WITH BASE DIMENSIONS OF 26" x 44" (660mm x 1118mm). ADJUST PLATFORM SIZE TO FIT CABINET BASE DIMENSIONS BEING SUPPLIED
2. BASED ON UNINTERRUPTIBLE POWER SUPPLY CABINET WITH BASE DIMENSIONS OF 16" x 25" (406mm x 635mm). ADJUST PLATFORM SIZE TO FIT CABINET BASE DIMENSIONS BEING SUPPLIED.
3. PLATFORM SIZE FOR CONTROLLER CABINET TYPE IV.
4. PLATFORM SIZE FOR CONTROLLER CABINET TYPE IV AND UNINTERRUPTIBLE POWER SUPPLY CABINET.
5. DRILLED HOLES THROUGH THE PLATFORM BASE TO MATCH THE CONTROLLER CABINET BOLT TEMPLATE. FASTEN THE CONTROLLER CABINET TO THE PLATFORM WITH CARRIAGE BOLTS, WASHERS AND NUTS.
6. FASTEN ALL SUPPORT WOOD FRAMING TO THE WOOD POSTS WITH 2 LAG SCREWS FOR EACH CONNECTION..

TEMPORARY SIGNAL CONTROLLER
WOOD SUPPORT PLATFORM

CABLE SLACK LENGTH	FEET	METER
HANDHOLE	6.5	2.0
DOUBLE HANDHOLE	13.0	4.0
SIGNAL POST	2.0	0.6
MAST ARM	2.0	0.6
CONTROLLER CABINET	1.5	0.5
FIBER OPTIC AT CABINET	13.0	4.0
ELECTRIC SERVICE AT (CABINET OR SERVICE LOCATION)	1.5	0.5
GROUND CABLE (SIGNAL POST, MAST ARM, CABINET)	1.5	0.5
GROUND CABLE (BETWEEN FRAME AND COVER)	5.0	1.6

CABLE SLACK

VERTICAL CABLE LENGTH	FEET	METER
MAST ARM POLE (MAST ARM MOUNTED SIGNAL HEAD) (L = MAST ARM LENGTH - DISTANCE TO SIGNAL HEAD FROM END OF ARM)	20.0+L	6.0+L
BRACKET MOUNTED (MAST ARM POLE OR SIGNAL POLE)	13.0	4.0
PEDESTRIAN PUSH BUTTON	6.0	2.0
SERVICE INSTALLATION POLE MOUNT TO SERVICE DROP	13.5	4.1
SERVICE INSTALLATION POLE MOUNT TO GROUND	13.5	4.1
SERVICE INSTALLATION GROUND MOUNT	6.0	2.0
FOUNDATION (SIGNAL POST, MAST ARM POLE, CONTROLLER CABINET, SERVICE-GROUND MOUNT)	3.0	1.0

VERTICAL CABLE LENGTH

FOUNDATION	DEPTH
TYPE A - Signal Post	4'-0" (1.2m)
TYPE C - CONTROLLER W/ UPS	4'-0" (1.2m)
TYPE D - CONTROLLER	4'-0" (1.2m)
SERVICE INSTALLATION, GROUND MOUNT, TYPE A - SQUARE	4'-0" (1.2m)

DEPTH OF FOUNDATION

Mast Arm Length	① Foundation Depth	Foundation Diameter	Spiral Diameter	Quantity of Rebars	Size of Rebars
Less than 30' (9.1 m)	10'-0" (3.0 m)	30" (750mm)	24" (600mm)	8	6(19)
Greater than or equal to 30' (9.1 m) and less than 40' (12.2 m)	13'-6" (4.1 m)	30" (750mm)	24" (600mm)	8	6(19)
	11'-0" (3.4 m)	36" (900mm)	30" (750mm)	12	7(22)
Greater than or equal to 40' (12.2 m) and less than 50' (15.2 m)	13'-0" (4.0 m)	36" (900mm)	30" (750mm)	12	7(22)
Greater than or equal to 50' (15.2 m) and up to 55' (16.8 m)	15'-0" (4.6 m)	36" (900mm)	30" (750mm)	12	7(22)
Greater than or equal to 56' (16.8 m) and less than 65' (19.8 m)	21'-0" (6.4 m)	42" (1060mm)	36" (900mm)	16	8(25)
Greater than or equal to 65' (19.8 m) and up to 75' (22.9 m)	25'-0" (7.6 m)	42" (1060mm)	36" (900mm)	16	8(25)

NOTES:

1. These foundation depths are for sites which have cohesive soils (clayey silt, sandy clay, etc.) along the length of the shaft, with an average Unconfined Compressive Strength (Qu) > 1.0 tsf (100 kpa). This strength shall be verified by boring data prior to construction or with testing by the Engineer during foundation drilling. The Bureau of Bridges & structures should be contacted for a revised design if other conditions are encountered.
2. Combination mast arm assemblies under 55 feet (16.8 m) shall use 36" (900 mm) diameter foundations.
3. Combination mast arm assemblies under 56 feet (16.8 m) through 75 feet (22.9 m) shall use 42" (1060 mm) diameter foundations
4. For mast arm assemblies with dual arms refer to state standard 878001..

DEPTH OF MAST ARM FOUNDATIONS, TYPE E

MODEL: Default
FILE NAME: pw:\\IL084EBIDINTEG.illinois.gov:PWIDOT\Documents\IDOT Offices\District 1\Projects\Dist5\d22x34\CADData\CADsheets\ts05.dgn

USER NAME = footemj	DESIGNED -	REVISED -	
	DRAWN -	REVISED -	
PLOT SCALE = 50.0000 ' / in.	CHECKED -	REVISED -	
PLOT DATE = 3/4/2019	DATE -	REVISED -	

STATE OF ILLINOIS
DEPARTMENT OF TRANSPORTATION

DISTRICT ONE
STANDARD TRAFFIC SIGNAL DESIGN DETAILS

SCALE: NONE | SHEET 5 OF 7 SHEETS | STA. TO STA.

MUN RTE.	SECTION	COUNTY	TOTAL SHEETS	SHEET NO.
4029	23-00146-00-PV	COOK	315	165
	TS-05	CONTRACT NO.61M26		
		ILLINOIS FED. AID PROJECT		

ts05.dgn 3/4/2019 11:23:29 AM User=footemj

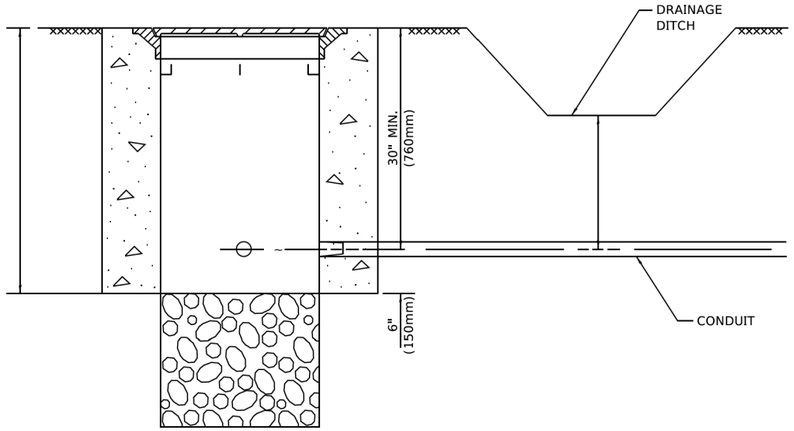

NOTES:

1. CONDUIT DEPTH SHALL BE A MINIMUM OF 30" (760mm) BELOW THE BOTTOM OF THE DRAINAGE DITCH OR ANY SLOPING GROUND
2. THE MINIMUM CONDUIT DEPTH APPLIES TO ALL CONDUIT PLACED UNDER ROADWAY PAVEMENT, MULTI-USE PATHS, SIDEWALKS AND SOIL SURFACES.
3. THE MINIMUM CONDUIT DEPTH APPLIES TO ALL HANDHOLES, HEAVY DUTY HANDHOLES AND DOUBLE HANDHOLES.

HANDHOLE WITH MINIMUM CONDUIT DEPTH

(NOT TO SCALE)

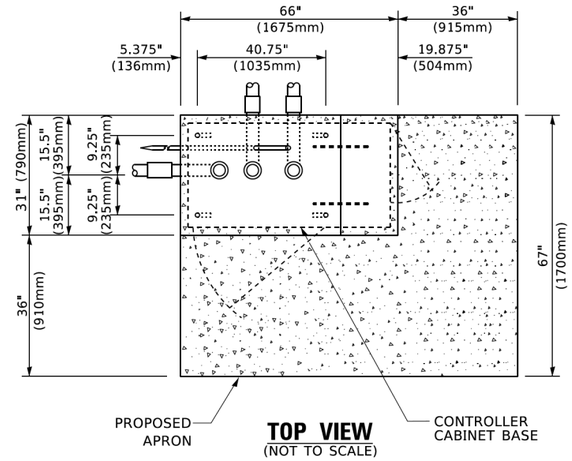

TOP VIEW

(NOT TO SCALE)

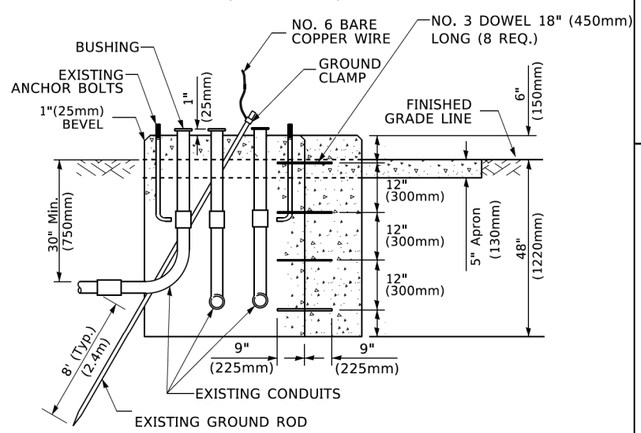

MODIFY EXISTING TYPE "D" FOUNDATION TO TYPE "C" FOUNDATION

(NOT TO SCALE)

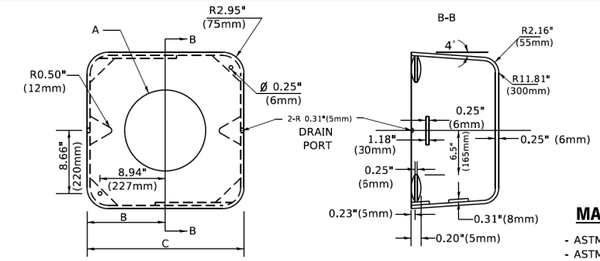

MATERIAL

- ASTM A36 STEEL
- ASTM A-123 HOT DIPPED GALVANIZED

A	B	C	HEIGHT	WEIGHT
VARIES	9.5"(241mm)	19"(483mm)	7" (178mm) - 12" (300mm)	53 lbs (24kg)
VARIES	10.75"(273mm)	21.5"(546mm)	7" (178mm) - 12" (300mm)	68 lbs (31 kg)
VARIES	13.0"(330mm)	26"(660mm)	7" (178mm) - 12" (300mm)	81 lbs (37 kg)
VARIES	18.5"(470mm)	37"(940mm)	7" (178mm) - 12" (300mm)	126 lbs (57 kg)

SHROUD

NOTES:

1. DIMENSION "A" IS EQUAL TO THE DIAMETER OF THE MAST ARM POLE AT THE TOP OF THE SHROUD. THE SHROUD SHALL BE TIGHT TO THE MAST ARM POLE.
2. THE SUPPLIER SHALL VERIFIED THE ABOVE DIMENSIONS BASED ON MAST ARM REQUIREMENTS.
3. THE HEIGHT OF THE SHROUD SHALL COVER THE ANCHOR BOLTS, NUTS AND MAST ARM POLE BASE.

NOTE:

SUPPORT EXISTING CABINET AND CONTROL EQUIPMENT ABOVE FOUNDATION TO KEEP TRAFFIC SIGNAL FUNCTIONING WHILE FOUNDATION MODIFICATION WORK IS PROCEEDING.

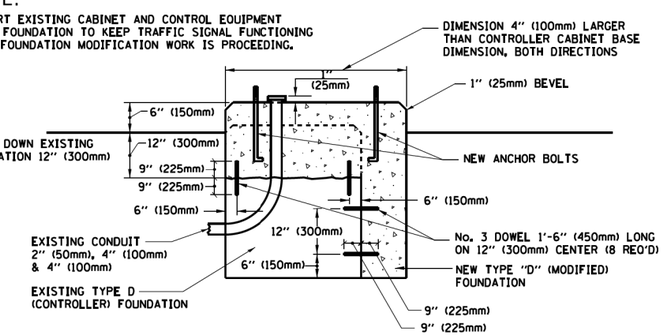

MODIFY EXISTING TYPE "D" FOUNDATION

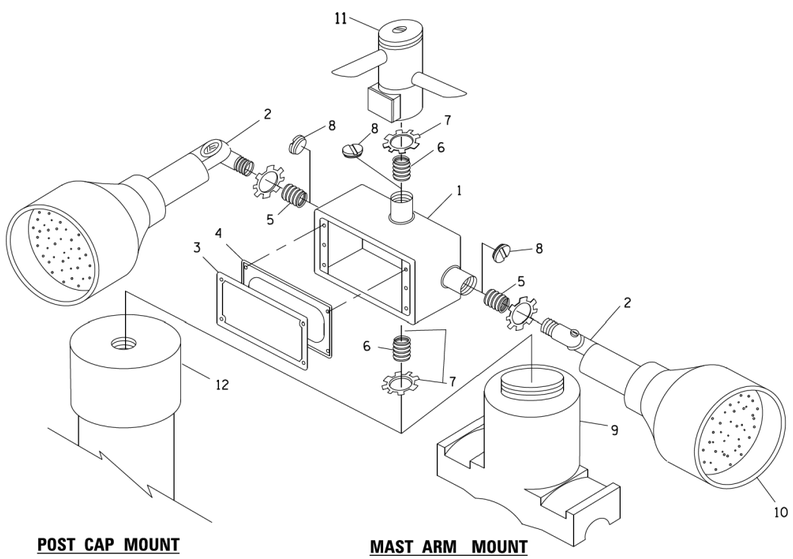

POST CAP MOUNT

MAST ARM MOUNT

EMERGENCY VEHICLE DETECTOR WITH CONFIRMATION BEACON MOUNTING DETAIL

ITEM NO.	IDENTIFICATION
1	OUTLET BOX- GALV. 21 CU.IN. (0.000344 CU-M)
2	LAMP HOLDER AND COVER
3	OUTLET BOX COVER
4	RUBBER COVER GASKET
5	REDUCING BUSHING
6	¾"(19 mm) CLOSE NIPPLE
7	¾"(19 mm) LOCKNUT
8	¾"(19 mm) HOLE PLUG
9	SADDLE BRACKET - GALV.
10	6 WATT PAR 38 LED FLOOD LAMP
11	DETECTOR UNIT
12	POST CAP [18 FT. (5.4 m) POST MIN.]

NOTES:

1. ALL ELECTRICAL ITEMS, EXCEPT ITEMS #2 AND #11 SHALL BE ALUMINUM OR GALVANIZED
2. ITEM #1- OZ/GEDNEY FSX-1-50 OR EQUIVALENT
   ITEM #2- MULBERRY CON-O-SHADE LAMP SHIELD OR EQUIVALENT
   ITEM #9- "BAND-IT" SADDLE BRACKET OR EQUIVALENT
3. WHEN POST MOUNTING IS SPECIFIED, ITEM #9 SHALL NOT BE REQUIRED. THE DETECTION UNIT SHALL BE MOUNTED DIRECTLY ON TOP OF THE CAP BY DRILLING AND TAPPING A 3/4 "(19 mm) HOLE WITH PIPE THREADS. THE POST CAP SHALL EITHER BE SCREWED TO THE TOP OF THE POST OR A MINIMUM OF 3 TIGHTENING SCREWS SHALL BE REQUIRED ON EACH CAP.

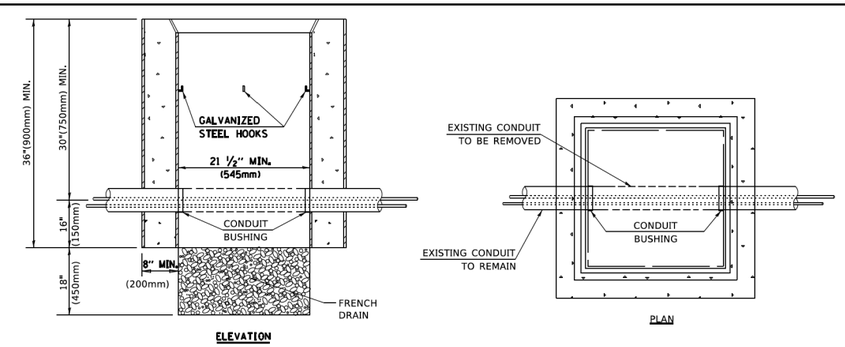

NOTES:

1. HANDHOLE CONSTRUCTED PER STATE STANDARD 814001.
2. REMOVAL OF THE EXISTING CONDUIT FROM THE HANDHOLE AND THE INSTALLATION OF THE CONDUIT BUSHINGS SHALL BE INCLUDED WITH THE COST OF THE HANDHOLE.

HANDHOLE TO INTERCEPT EXISTING CONDUIT

USER NAME = footemj	DESIGNED -	REVISED -
	DRAWN -	REVISED -
PLOT SCALE = 50.0000 ' / in.	CHECKED -	REVISED -
PLOT DATE = 3/4/2019	DATE -	REVISED -

STATE OF ILLINOIS
DEPARTMENT OF TRANSPORTATION

DISTRICT ONE
STANDARD TRAFFIC SIGNAL DESIGN DETAILS

SCALE: NONE | SHEET 6 OF 7 SHEETS | STA. TO STA.

MUN RTE.	SECTION	COUNTY	TOTAL SHEETS	SHEET NO.
4029	23-00146-00-PV	COOK	315	166
	TS-05	CONTRACT NO.61M26		
		ILLINOIS FED. AID PROJECT		

MODEL: Default
FILE NAME: pw:\\IL084EBIDINTEG.illinois.gov:PWIDOT\Documents\IDOT Offices\District 1\Projects\Dist5\d22-34\CADData\CADsheets\ts05.dgn

ts05.dgn 3/4/2019 11:23:51 AM User=footemj

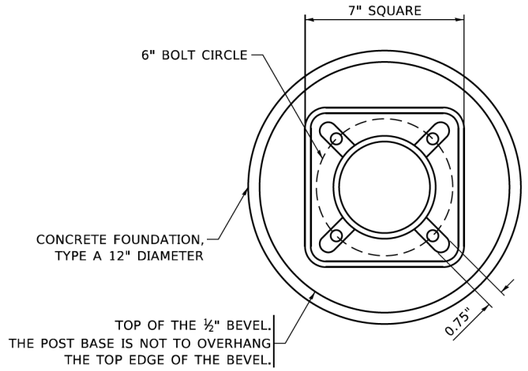

BOLT PATTERN

NOTE:

1. IF THE PEDESTRIAN SIGNAL POST FOUNDATION IS INSTALLED WITHIN OR BEHIND A BARRIER CURB, THE TOP OF THE FOUNDATION SHALL BE INSTALLED FLUSH WITH THE TOP OF THE BARRIER CURB.

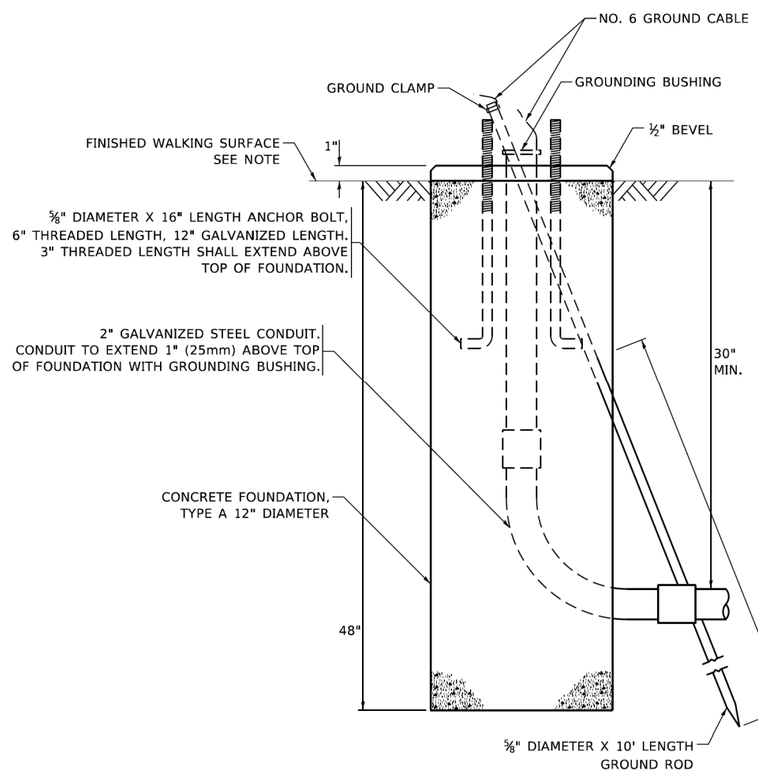

CONCRETE FOUNDATION, TYPE A 12–INCH DIAMETER

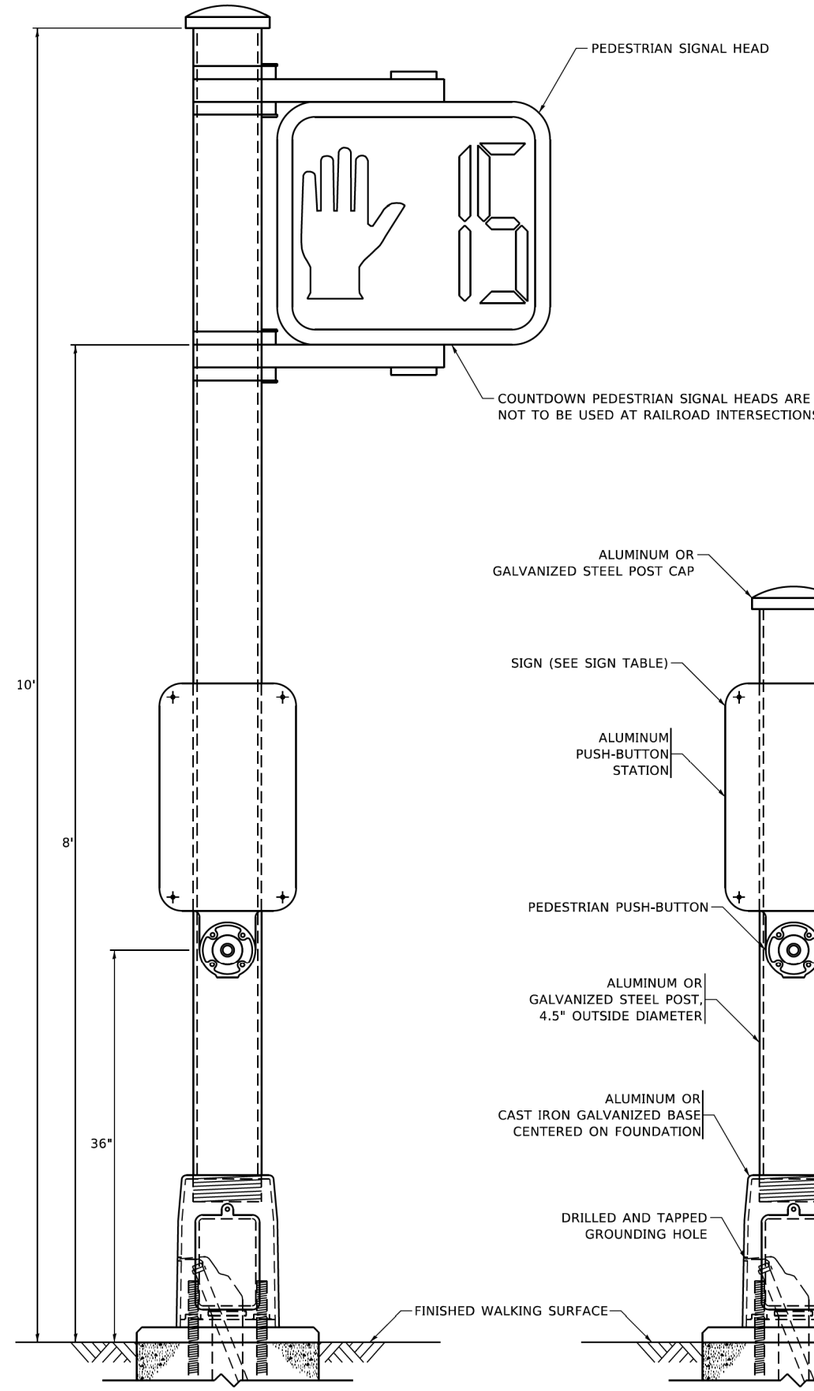

PEDESTRIAN SIGNAL POST, 10 FT.

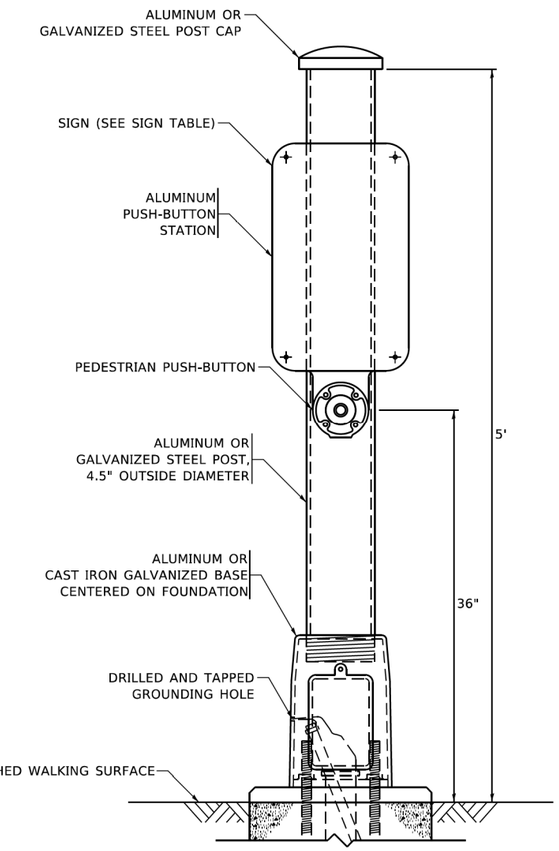

PEDESTRIAN SIGNAL POST, 5 FT.

R10–3b **R10–3d** **R10–3e**

SIGN TABLE

SIGN	DIMENSIONS
R10-3b (RAILROAD ONLY)	9" X 12"
R10-3d (RAILROAD ONLY)	9" X 12"
R10-3e	9" X 12"

NOTES:

1. THE SIGN PANELS SHALL BE TYPE AP SHEETING.
2. THE ARROW ON SIGNS FOR PUSH-BUTTONS SERVING TWO DIRECTIONS ON THE SAME PHASE SHALL BE BI-DIRECTIONAL.
3. THE SIGN FOR DUAL-CALL PUSH-BUTTONS SHALL HAVE NO ARROW.

MODEL: Default
FILE NAME: pw:\\ullanroom.dot.illinois.gov:PWIDOT\Documents\IDOT Offices\District 1\Projects\Dist\Std22x34\CADData\CADsheets\ts05.dgn

USER NAME = gaglianobt	DESIGNED - IP	REVISED - 10-15-2020	
	DRAWN - IP	REVISED -	
PLOT SCALE = 100.0000 ' / in.	CHECKED - LP	REVISED -	
PLOT DATE = 11/23/2020	DATE - 10-15-2018	REVISED -	

STATE OF ILLINOIS
DEPARTMENT OF TRANSPORTATION

DISTRICT ONE
STANDARD TRAFFIC SIGNAL DESIGN DETAILS

SCALE: NONE | SHEET 7 OF 7 SHEETS | STA. TO STA.

MUN RTE.	SECTION	COUNTY	TOTAL SHEETS	SHEET NO.
4029	23-00146-00-PV	COOK	315	167
	TS–05	CONTRACT NO.61M26		
		ILLINOIS	FED. AID PROJECT	

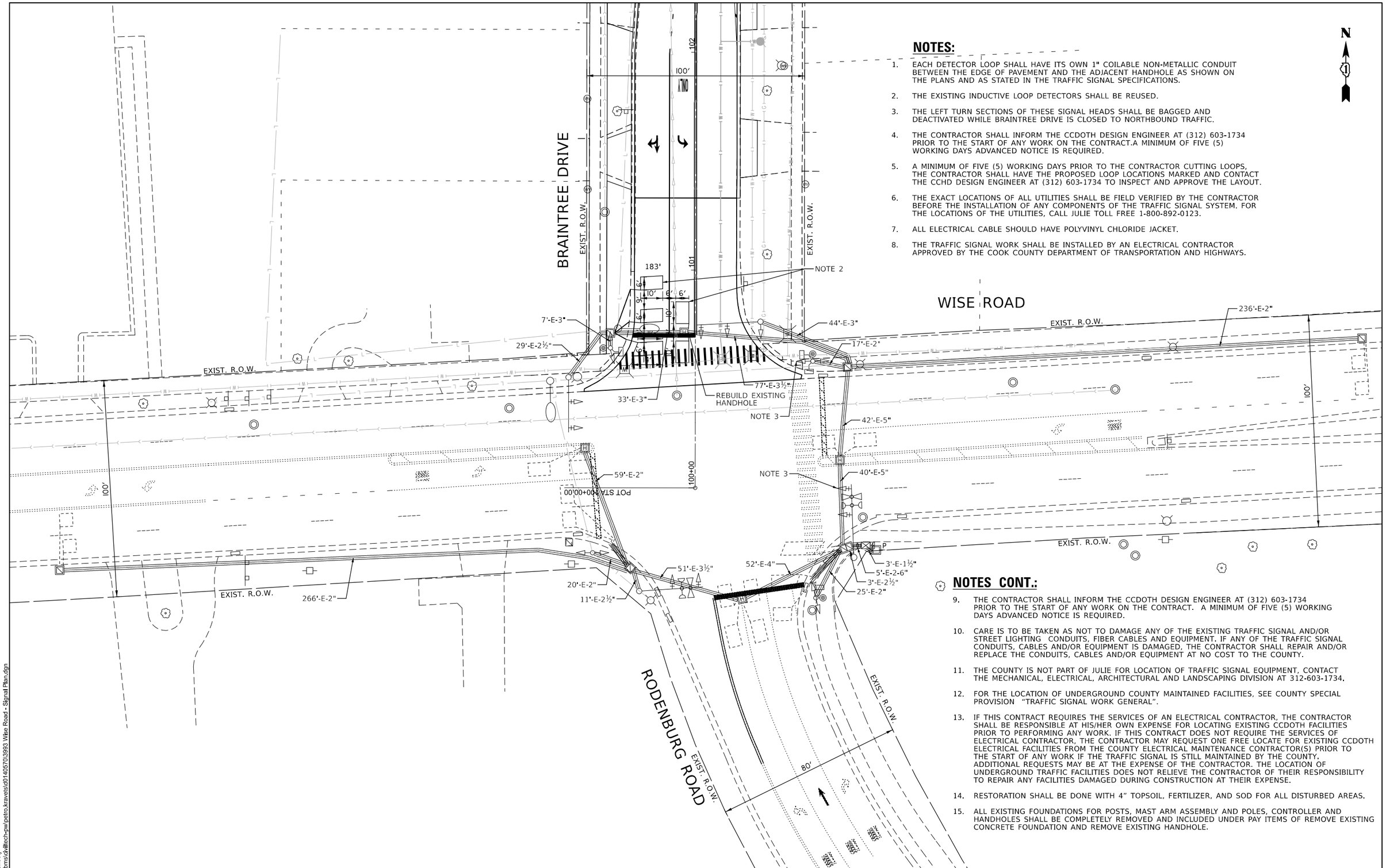

NOTES:

1. EACH DETECTOR LOOP SHALL HAVE ITS OWN 1" COILABLE NON-METALLIC CONDUIT BETWEEN THE EDGE OF PAVEMENT AND THE ADJACENT HANDHOLE AS SHOWN ON THE PLANS AND AS STATED IN THE TRAFFIC SIGNAL SPECIFICATIONS.
2. THE EXISTING INDUCTIVE LOOP DETECTORS SHALL BE REUSED.
3. THE LEFT TURN SECTIONS OF THESE SIGNAL HEADS SHALL BE BAGGED AND DEACTIVATED WHILE BRAINTREE DRIVE IS CLOSED TO NORTHBOUND TRAFFIC.
4. THE CONTRACTOR SHALL INFORM THE CCDOTH DESIGN ENGINEER AT (312) 603-1734 PRIOR TO THE START OF ANY WORK ON THE CONTRACT.A MINIMUM OF FIVE (5) WORKING DAYS ADVANCED NOTICE IS REQUIRED.
5. A MINIMUM OF FIVE (5) WORKING DAYS PRIOR TO THE CONTRACTOR CUTTING LOOPS, THE CONTRACTOR SHALL HAVE THE PROPOSED LOOP LOCATIONS MARKED AND CONTACT THE CCHD DESIGN ENGINEER AT (312) 603-1734 TO INSPECT AND APPROVE THE LAYOUT.
6. THE EXACT LOCATIONS OF ALL UTILITIES SHALL BE FIELD VERIFIED BY THE CONTRACTOR BEFORE THE INSTALLATION OF ANY COMPONENTS OF THE TRAFFIC SIGNAL SYSTEM. FOR THE LOCATIONS OF THE UTILITIES, CALL JULIE TOLL FREE 1-800-892-0123.
7. ALL ELECTRICAL CABLE SHOULD HAVE POLYVINYL CHLORIDE JACKET.
8. THE TRAFFIC SIGNAL WORK SHALL BE INSTALLED BY AN ELECTRICAL CONTRACTOR APPROVED BY THE COOK COUNTY DEPARTMENT OF TRANSPORTATION AND HIGHWAYS.

NOTES CONT.:

9. THE CONTRACTOR SHALL INFORM THE CCDOTH DESIGN ENGINEER AT (312) 603-1734 PRIOR TO THE START OF ANY WORK ON THE CONTRACT. A MINIMUM OF FIVE (5) WORKING DAYS ADVANCED NOTICE IS REQUIRED.
10. CARE IS TO BE TAKEN AS NOT TO DAMAGE ANY OF THE EXISTING TRAFFIC SIGNAL AND/OR STREET LIGHTING CONDUITS, FIBER CABLES AND EQUIPMENT. IF ANY OF THE TRAFFIC SIGNAL CONDUITS, CABLES AND/OR EQUIPMENT IS DAMAGED, THE CONTRACTOR SHALL REPAIR AND/OR REPLACE THE CONDUITS, CABLES AND/OR EQUIPMENT AT NO COST TO THE COUNTY.
11. THE COUNTY IS NOT PART OF JULIE FOR LOCATION OF TRAFFIC SIGNAL EQUIPMENT, CONTACT THE MECHANICAL, ELECTRICAL, ARCHITECTURAL AND LANDSCAPING DIVISION AT 312-603-1734.
12. FOR THE LOCATION OF UNDERGROUND COUNTY MAINTAINED FACILITIES, SEE COUNTY SPECIAL PROVISION "TRAFFIC SIGNAL WORK GENERAL".
13. IF THIS CONTRACT REQUIRES THE SERVICES OF AN ELECTRICAL CONTRACTOR, THE CONTRACTOR SHALL BE RESPONSIBLE AT HIS/HER OWN EXPENSE FOR LOCATING EXISTING CCDOTH FACILITIES PRIOR TO PERFORMING ANY WORK. IF THIS CONTRACT DOES NOT REQUIRE THE SERVICES OF ELECTRICAL CONTRACTOR, THE CONTRACTOR MAY REQUEST ONE FREE LOCATE FOR EXISTING CCDOTH ELECTRICAL FACILITIES FROM THE COUNTY ELECTRICAL MAINTENANCE CONTRACTOR(S) PRIOR TO THE START OF ANY WORK IF THE TRAFFIC SIGNAL IS STILL MAINTAINED BY THE COUNTY. ADDITIONAL REQUESTS MAY BE AT THE EXPENSE OF THE CONTRACTOR. THE LOCATION OF UNDERGROUND TRAFFIC FACILITIES DOES NOT RELIEVE THE CONTRACTOR OF THEIR RESPONSIBILITY TO REPAIR ANY FACILITIES DAMAGED DURING CONSTRUCTION AT THEIR EXPENSE.
14. RESTORATION SHALL BE DONE WITH 4" TOPSOIL, FERTILIZER, AND SOD FOR ALL DISTURBED AREAS.
15. ALL EXISTING FOUNDATIONS FOR POSTS, MAST ARM ASSEMBLY AND POLES, CONTROLLER AND HANDHOLES SHALL BE COMPLETELY REMOVED AND INCLUDED UNDER PAY ITEMS OF REMOVE EXISTING CONCRETE FOUNDATION AND REMOVE EXISTING HANDHOLE.

MODEL: Plan [Sheet]
FILE NAME: c:\bms\civiltech-pw\petro.kravets\d0140570\3993 Wise Road - Signal Plan.dgn

USER NAME = pk	DESIGNED - LEP	REVISED -	
	DRAWN - LEP	REVISED -	
	CHECKED - JJE	REVISED -	
PLOT DATE = 12/11/2025	DATE - 12/12/2025	REVISED -	

STATE OF ILLINOIS
DEPARTMENT OF TRANSPORTATION

TRAFFIC SIGNAL MODERNIZATION PLAN
BRAINTREE DRIVE AND WISE ROAD

SCALE: SHEET 1 OF 1 SHEETS STA. TO STA.

MUN RTE.	SECTION	COUNTY	TOTAL SHEETS	SHEET NO.
4029	23-00146-00-PV	COOK	315	168
		CONTRACT NO. 61M26		
		ILLINOIS	FED. AID PROJECT	

EXISTING CONTROLLER SEQUENCE

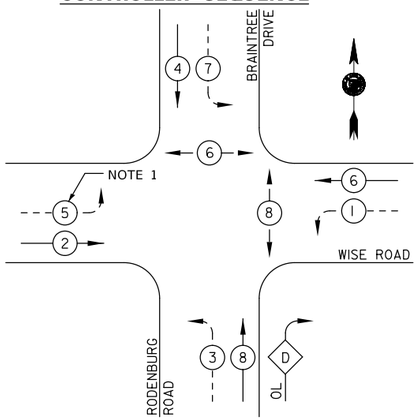

EXISTING EMERGENCY VEHICLE PREEMPTION SEQUENCE

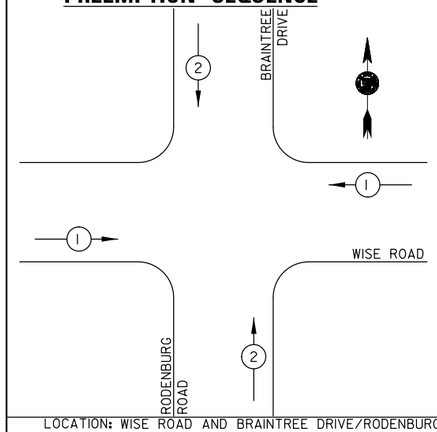

LEGEND

- DUAL ENTRY PHASE
- SINGLE ENTRY PHASE
- OVERLAP
- PEDESTRIAN PHASE
- * NUMBER REFERS TO ASSOCIATED PHASE

RIGHT TURN OVERLAP PHASE DESIGNATION:

OVERLAP LETTER		PERMISSIVE PHASE		PROTECTED PHASE
D	=	8	+	1

PROPOSED EMERGENCY VEHICLE PREEMPTORS		
EMERGENCY VEHICLE PREEMPTOR	1	2
MOVEMENT	← →	↓ ↑

NOTES:

1. THE LEFT TURN SECTIONS OF THESE SIGNAL HEADS SHALL BE BAGGED AND DEACTIVATED WHILE BRAINTREE DRIVE IS CLOSED TO NORTHBOUND TRAFFIC.

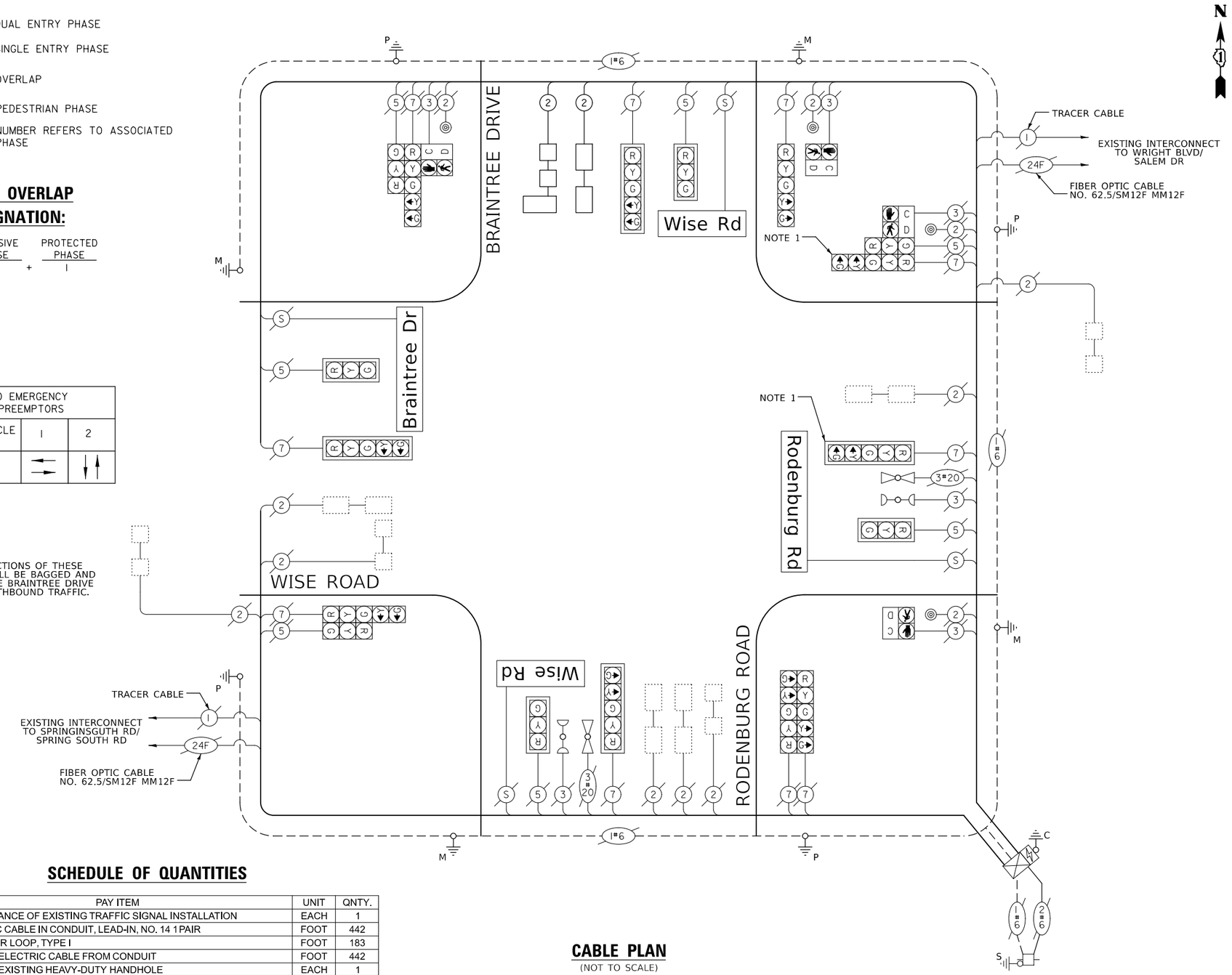

LOCATION: WISE ROAD AND BRAINTREE DRIVE/RODENBURG ROAD
COOK COUNTY
DEPARTMENT OF TRANSPORTATION AND HIGHWAYS
TRAFFIC SIGNAL INSTALLATION
ELECTRICAL SERVICE REQUIREMENTS

TYPE	NO. LAMPS	WATTAGE	% OPERATION	TOTAL
CONTROLLER	1	100	1.00	100.0
VEHICLE DET.	-	-	-	-
PED. SIGNAL	4	20	1.00	80.0
12" SIGNAL (RED)	17	11	0.50	93.5
(YELLOW)	17	20	0.05	17.0
(GREEN)	17	12	0.45	91.8
(ARROW)	10	10	0.10	10.0
ILLUMINATED LED STREET NAME SIGN	4	120	0.50	240.0
			TOTAL =	632.3

ENERGY COST TO:
COOK COUNTY BUREAU OF ADMINISTRATION
118 N. CLARK STREET, ROOM 801
CHICAGO, IL 60602
TOWER ACCOUNT NO. _____

ENERGY COST SHARE:
COOK COUNTY: 100%

ENERGY SUPPLY CONTACT: COM ED
PHONE: (866) 639-3532
COMPANY: COM ED

SCHEDULE OF QUANTITIES

PAY ITEM	UNIT	QNTY.
MAINTENANCE OF EXISTING TRAFFIC SIGNAL INSTALLATION	EACH	1
ELECTRIC CABLE IN CONDUIT, LEAD-IN, NO. 14 1 PAIR	FOOT	442
DETECTOR LOOP, TYPE I	FOOT	183
REMOVE ELECTRIC CABLE FROM CONDUIT	FOOT	442
REBUILD EXISTING HEAVY-DUTY HANDHOLE	EACH	1
TEMPORARY TRAFFIC SIGNAL TIMING	EACH	6

NOTE:

THE PAY ITEM "TEMPORARY TRAFFIC SIGNAL TIMING" SHALL BE INCLUDED AT THE INTERSECTIONS OF WISE ROAD/BRAINTREE DRIVE, WISE ROAD/SPRINGINSGUTH ROAD, SCHAUMBURG ROAD/SPRINGINSGUTH ROAD, SCHAUMBURG ROAD/BRAINTREE DRIVE, SCHAUMBURG ROAD/GRAND CENTRAL LANE AND SCHAUMBURG ROAD/SALEM DRIVE.

CABLE PLAN

(NOT TO SCALE)

MODEL: CablePlan-1 [Sheet]
FILE NAME: c:\pwworking\dot\d0405703993\d1405703993 Wise Road - Cable Plan.dgn

USER NAME = JFG	DESIGNED - LEP	REVISED -	STATE OF ILLINOIS DEPARTMENT OF TRANSPORTATION
	DRAWN - LEP	REVISED -	
	CHECKED - JJE	REVISED -	
PLOT DATE = 11/14/2025	DATE - 12/12/2025	REVISED -	

PROPOSED CABLE PLAN, PHASE DESIGNATION DIAGRAM, EMERGENCY VEHICLE PREEMPTION SEQUENCE, AND SCHEDULE OF QUANTITIES
BRAINTREE DRIVE AND WISE ROAD

SCALE: | SHEET 1 OF 1 SHEETS | STA. | TO STA.

MUN RTE.	SECTION	COUNTY	TOTAL SHEETS	SHEET NO.
4029	23-00146-00-PV	COOK	313	169

CONTRACT NO. 61M26

ILLINOIS | FED. AID PROJECT

LEGEND

EXISTING LIGHTING UNIT

REMOVAL OF LIGHTING UNIT, SALVAGE

EXISTING LIGHTING UNIT
(WEATHERSFIELD WAY)

PROPOSED LIGHTING UNIT
LUMINAIRE, LED, SPECIAL (120V)
LIGHT POLE , ALUMINUM
25 FT. M.H 10FT. MAST ARM
LIGHT POLE FOUNDATION, METAL
11 1/2" BOLT CIRCLE, 8 5/8" X 6"
BREAKAWAY DEVICE, TRANSFORMER BASE
11.5 INCH BOLT CIRCLE (ONLY AS
SPECIFIED IN PLANS)

RELOCATED EXISTING LIGHTING UNIT

PROPOSED UNIT DUCT
(AS SPECIFIED IN PLANS)

PROPOSED UNDERGROUND CONDUIT, GALVANIZED STEEL
(SIZE AS SPECIFIED IN PLANS)

EXISTING LIGHTING CABLES

REMOVE ELECTRIC CABLE FROM CONDUIT

LIGHTING GENERAL NOTES

1. IT SHALL BE THE CONTRACTOR'S RESPONSIBILITY TO VERIFY ALL DIMENSIONS AND CONDITIONS IN THE FIELD PRIOR TO ORDERING MATERIALS AND BEGINNING CONSTRUCTION.
2. PAY ITEMS IN THE SUMMARY OF QUANTITIES HAVE BEEN ESTIMATED. IF, IN THE ENGINEER'S OPINION, ANY WORK IS NOT REQUIRED, THAT ITEM WILL BE DEDUCTED FROM THE CONTRACT AND NO ADDITIONAL COMPENSATION WILL BE ALLOWED.
3. IT SHALL BE THE CONTRACTOR'S RESPONSIBILITY TO MARK THE PROPOSED LOCATIONS OF ALL LIGHT POLES FOR EXAMINATION AND CONFIRMATION WITH THE RESIDENT ENGINEER.
4. THE CONTRACTOR SHALL VERIFY ALL UTILITY LOCATIONS PRIOR TO AUGURING FOR LIGHT POLE FOUNDATIONS. THE EXACT LOCATIONS FOR ALL ITEMS SHALL BE CONFIRMED WITH THE RESIDENT ENGINEER.
5. THE CONTRACTOR SHALL BE RESPONSIBLE FOR THE ESTABLISHMENT OF FINISHED GRADE. THE RESIDENT ENGINEER MAY ASSIST THE CONTRACTOR, AS APPLICABLE, BUT THE RESPONSIBILITY FOR COORDINATING THE FINISHED GRADE ELEVATION WITH THE TOP OF FOUNDATIONS HEIGHTS AND THE LIGHT SHALL REMAIN WITH THE CONTRACTOR.
6. LIGHT POLE FOUNDATION TYPE WILL BE METAL UNLESS OTHERWISE SPECIFIED IN THE PLANS. FOUNDATION TYPE IS BASED ON KNOWN UTILITY INFORMATION. OFFSET FOUNDATION WILL BE USED IF UTILITY CONFLICT IS UNAVOIDABLE. FOUNDATION TYPE SHALL BE APPROVED BY THE ENGINEER PRIOR TO INSTALLATION. CONTRACTOR WILL BE PAID FOR THE FOUNDATION TYPE INSTALLED WITH NO ADDITIONAL COMPENSATION FOR CHANGE FROM CONTRACT PLAN.
7. FOR ALL CONCRETE FOUNDATIONS, A MINIMUM OF 2 SLEEVES SHALL BE PROVIDED REGARDLESS OF WHAT IS BEING INSTALLED. THE SLEEVES SHALL BE SEALED AND CAPPED TO PREVENT MOISTURE OR CONTAMINANTS. MATERIAL AND LABOR WILL NOT BE PAID FOR SEPARATELY BUT WILL BE INCLUDED IN THE PAY ITEM FOR LIGHT POLE FOUNDATION.
8. TO MAINTAIN THE STRUCTURAL INTEGRITY OF ALUMINUM POLES WITH MAST ARMS, THEY SHALL NOT BE ERECTED AND LEFT TO STAND WITHOUT LUMINAIRES. NOTE THAT THE CONTRACTOR SHALL NOT BE PAID FOR POLES UNTIL LUMINAIRES ARE INSTALLED.
9. CONDUIT AND UNIT DUCT MUST BE POSITIONED IN THE FIELD TO AVOID CONFLICT WITH TREES, BUSHES, DRAINS, OTHER UTILITIES, AND LANDSCAPING. PREFERRED LOCATION OF UNIT DUCT IS 12 INCHES OFF PROPOSED BACK OF CURB AND IN NO CASE SHALL IT BE CLOSER THEN 12 INCHES. PLACEMENT OF UNIT DUCT GREATER THAN 12 INCHES FROM THE BACK OF CURB SHALL BE APPROVED BY THE ENGINEER.
10. WHEN SPLICING TO EXISTING POLE, ANY AND ALL WORK REQUIRED TO RUN THE PROPOSED UNIT DUCT INTO EXISTING FOUNDATION SLEEVE AND SPLICING IN EXISTING POLE SHALL BE COVERED AND INCLUDED IN THE PAY ITEM FOR THE UNIT DUCT.
11. THE CABLE TRENCH SHALL BE BACKFILLED AND FIRMLY COMPACTED BEFORE ANY LIGHT STANDARD IS ERECTED.
12. THE INSTALLATION OF BURIED WARNING TAPE SHALL BE INSPECTED AND APPROVED BY THE RESIDENT ENGINEER.
13. NO UNDERGROUND SPLICING ALLOWED.
14. ANY DAMAGE TO PAVEMENT, SIDEWALK, CURB, OR ANY OTHER PORTION OF THE ROADWAY NOT SPECIFICALLY TO BE REMOVED AND REPLACED SHALL BE REPAIRED OR REPLACED BY THE CONTRACTOR AT NO ADDITIONAL COST AND REPLACEMENT SHALL MEET THE APPROVAL OF THE ENGINEER.
15. OFFSETS CALL-OFFS FOR LIGHT POLES ARE FROM THE CENTER OF POLES TO CONSTRUCTION CENTERLINE
16. EXISTING LIGHTING UNIT TO BE RELOCATED WILL BE COORDINATED AND COMPLETED ON THE SAME DAY WITHOUT ANY INTERRUPTION OF OPERATION FOR THAT SAME EVENING.
17. IF THE PROPOSED ROUNDABOUT WILL BE READY TO BE OPEN TO TRAFFIC PRIOR TO THE LIGHTING SYSTEM BEING OPERATIONAL (BECAUSE OF DELAYS IN OBTAINING LUMINAIRES, POLES, FOUNDATIONS, UNIT DUCT OR OTHER LIGHTING ITEMS) THEN TEMPORARY LIGHTING UNITS AND AERIAL CABLES SHALL BE INSTALLED SO THE ROADWAY CAN BE OPENED TO TRAFFIC. THE WORK SHALL BE COORDINATED AND APPROVED BY THE ENGINEER AND GENERAL CONTRACTOR.
    A. THE LOCATION OF TEMPORARY POLES SHALL BE NEAR PROPOSED LOCATIONS BUT SHALL NOT INTERFER WITH INSTALLATION OF PROPOSED POLE LOCATIONS
    B. THE MOUNTING HEIGHT OF THE LUMINAIRE SHALL BE THE SAME AS ON THE PROPOSED LIGHT POLES.
    C. WHEN TRANSFERRING THE LIGHTING FROM THE TEMPORARY POLES TO THE PROPOSED POLES, THE TRANSFER SHALL BE SEQUENCED SO THAT BY EVENING EACH NIGHT THE ROADWAY AND INTERSECTIONS ARE COMPLETELY LIT BY EITHER TEMPORARY, PROPOSED OR A COMBINATION OF BOTH.

LIGHTING SCHEDULE OF QUANTITIES

CODED PAY ITEM NO.	ITEM	UNIT	TOTAL QUANTITY
80400200	ELECTRIC UTILITY SERVICE CONNECTION	L SUM	1
81028240	UNDERGROUND CONDUIT, GALVANIZED STEEL, 4" DIA.	FOOT	1075
81028730	UNDERGROUND CONDUIT, COILABLE NONMETALLIC CONDUIT, 1 1/4" DIA.	FOOT	2921
81603080	UNIT DUCT, 600V, 3-1C NO. 2, 1/C NO. 4 GROUND, (XLP-TYPE USE), 1 1/4" POLYETHYLENE	FOOT	804
81702130	ELECTRIC CABLE IN CONDUIT, 600V (XLP-TYPE USE) 1/C NO. 6	FOOT	5842
81800230	AERIAL CABLE, 2-1/C NO. 6 WITH MESSENGER WIRE	FOOT	1150
83000198	LIGHT POLE, ALUMINUM, 25FT. M.H. 10FT. MAST ARM	EACH	10
83600352	LIGHT POLE FOUNDATION, METAL, 11 1/2" BOLT CIRCLE, 8 5/8" X 6'	EACH	14
83800105	BREAKAWAY DEVICE,TRANSFORMER BASE, 11.5 INCH BOLT CIRCLE	EACH	8
84100110	REMOVAL OF TEMPORARY LIGHTING UNIT	EACH	11
84200500	REMOVAL OF LIGHTING UNIT, SALVAGE	EACH	4
84200804	REMOVAL OF POLE FOUNDATION	EACH	9
84400105	RELOCATE EXISTING LIGHTING UNIT	EACH	5
89502300	REMOVE ELECTRIC CABLE FROM CONDUIT	FOOT	6220
X1400238	LUMINAIRE, LED, SPECIAL	EACH	10
X8211004	TEMPORARY LUMINAIRE, LED, ROADWAY, OUTPUT DESIGNATION D	EACH	9
X8302141	TEMPORARY WOOD POLE, 40 FT., CLASS 4	EACH	11
X8360215	LIGHT POLE FOUNDATION, 24" DIAMETER, OFFSET	FOOT	12
X8772115	TEMPORARY MAST ARM, ALUMINUM, 15FT	EACH	9
X8000003	MAINTENANCE OF LIGHTING SYSTEM	CAL MO	16

NOTES:

1. RELOCATION OF EXISTING LIGHTING UNIT WILL BE COORDINATED AND COMPLETED ON THE SAME DAY WITHOUT ANY INTERRUPTION OF OPERATION FOR THE SAME EVENING.

2. ELECTRIC CABLES THAT ARE DIRECT BURIED WILL NOT BE REMOVED.

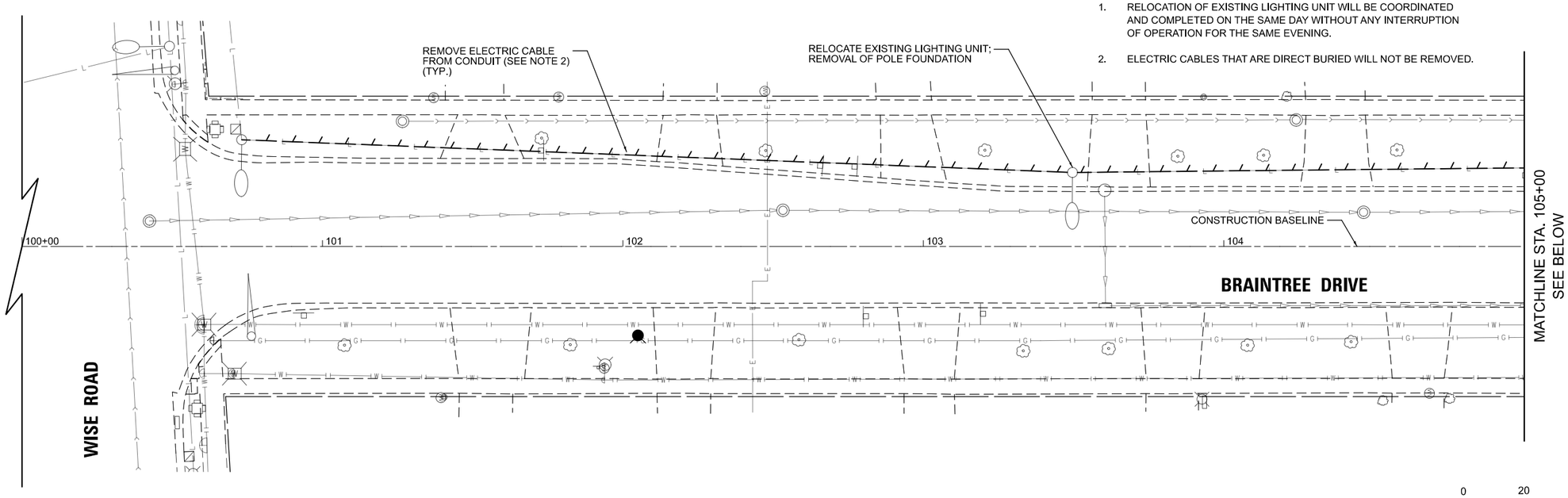

0 20 40 60
SCALE IN FEET

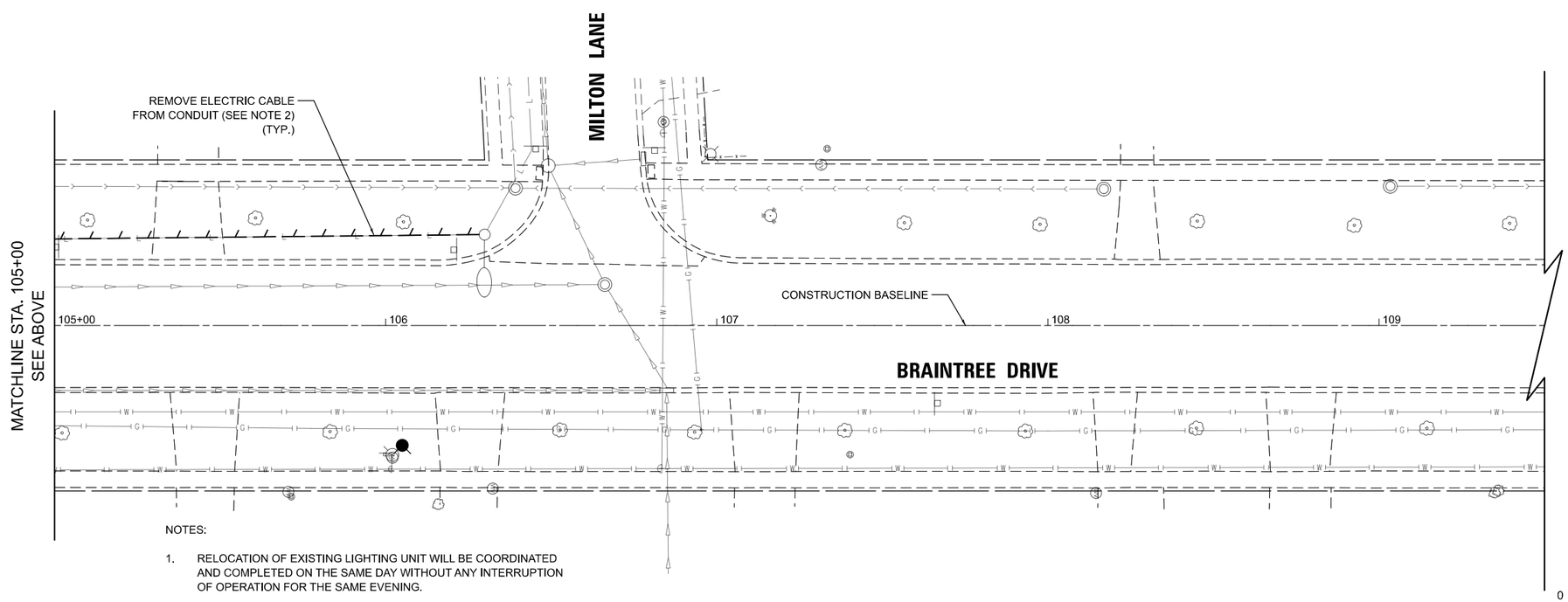

NOTES:

1. RELOCATION OF EXISTING LIGHTING UNIT WILL BE COORDINATED AND COMPLETED ON THE SAME DAY WITHOUT ANY INTERRUPTION OF OPERATION FOR THE SAME EVENING.

2. ELECTRIC CABLES THAT ARE DIRECT BURIED WILL NOT BE REMOVED.

0 20 40 60
SCALE IN FEET

MODEL: Braintree - Plan 0-1 [Sheet]
FILE NAME: c:\bms\dvltech-pw\petro.kravets\d0140571\3993-0201-sht-lighting 02-07.dgn

USER NAME = pk	DESIGNED - SJC	REVISED -	
	DRAWN - SJC	REVISED -	
	CHECKED - DNM	REVISED -	
PLOT DATE = 12/15/2025	DATE - 12/12/2025	REVISED -	

STATE OF ILLINOIS
DEPARTMENT OF TRANSPORTATION

BRAINTREE DRIVE
LIGHTING REMOVAL PLAN

SCALE: 1"=20' | SHEET 1 OF 7 SHEETS | STA. 100+00.00 TO STA. 105+00.00

MUN RTE.	SECTION	COUNTY	TOTAL SHEETS	SHEET NO.
4029	23-00146-00-PV	COOK	315	171

CONTRACT NO. 61M26

ILLINOIS | FED. AID PROJECT

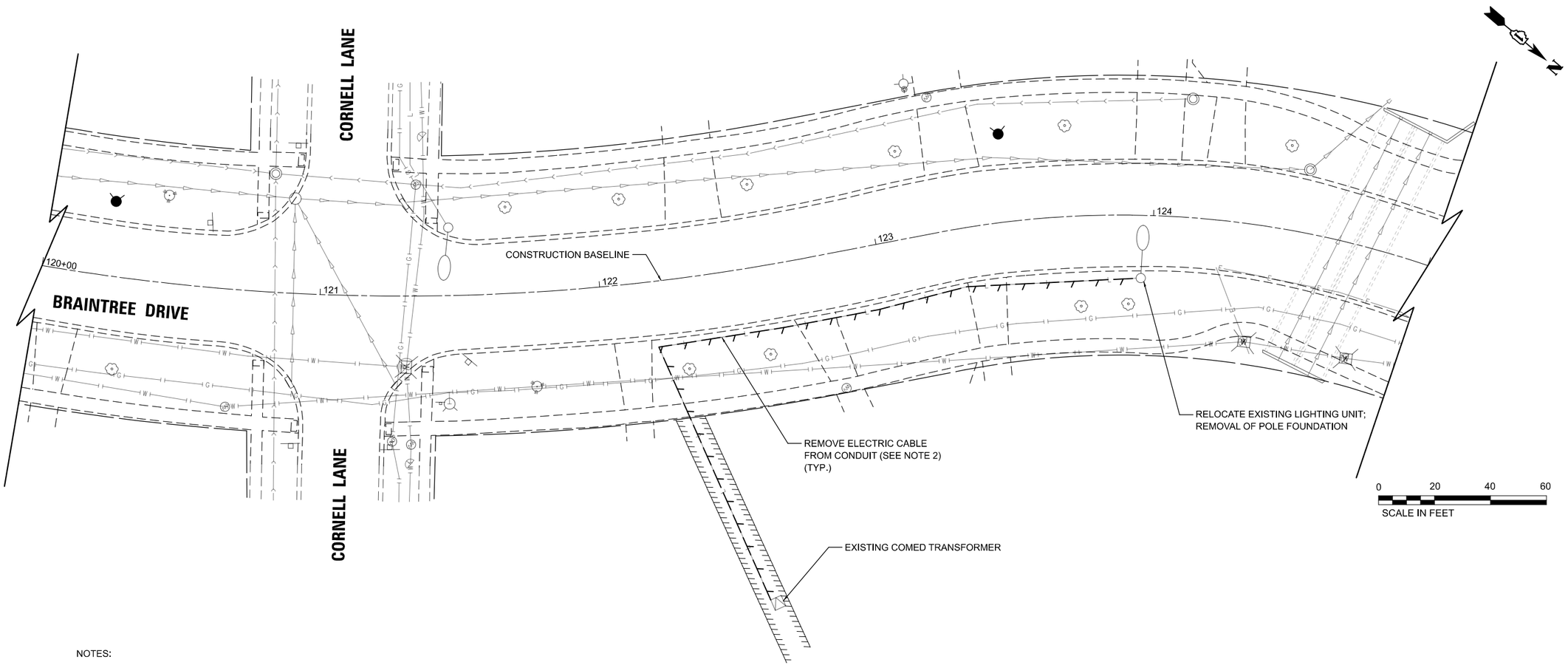

NOTES:

1. RELOCATION OF EXISTING LIGHTING UNIT WILL BE COORDINATED AND COMPLETED ON THE SAME DAY WITHOUT ANY INTERRUPTION OF OPERATION FOR THE SAME EVENING.

2. ELECTRIC CABLES THAT ARE DIRECT BURIED WILL NOT BE REMOVED.

MODEL: Braintree - Plan 0-3 [Sheet]
FILE NAME: c:\bms\dvlltech-pw\petro.kravets\d0140571\3993-0201-sht-Lighting 02-07.dgn

USER NAME = pk	DESIGNED - SJC	REVISED -	
	DRAWN - SJC	REVISED -	
	CHECKED - DNM	REVISED -	
PLOT DATE = 12/11/2025	DATE - 12/12/2025	REVISED -	

STATE OF ILLINOIS
DEPARTMENT OF TRANSPORTATION

BRAINTREE DRIVE
LIGHTING REMOVAL PLAN

SCALE: 1"=20' | SHEET 2 OF 7 SHEETS | STA. 120+00.00 TO STA. 125+00.00

MUN RTE.	SECTION	COUNTY	TOTAL SHEETS	SHEET NO.
4029	23-00146-00-PV	COOK	315	172

CONTRACT NO. 61M26

ILLINOIS | FED. AID PROJECT

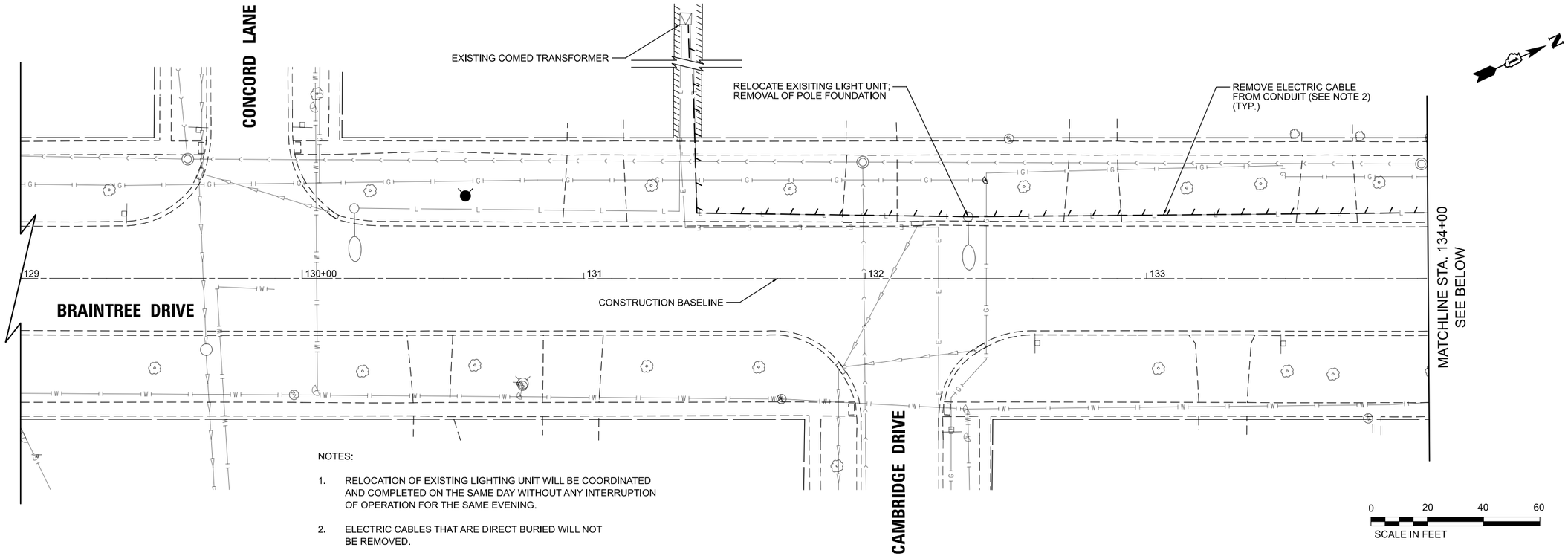

NOTES:

1. RELOCATION OF EXISTING LIGHTING UNIT WILL BE COORDINATED AND COMPLETED ON THE SAME DAY WITHOUT ANY INTERRUPTION OF OPERATION FOR THE SAME EVENING.

2. ELECTRIC CABLES THAT ARE DIRECT BURIED WILL NOT BE REMOVED.

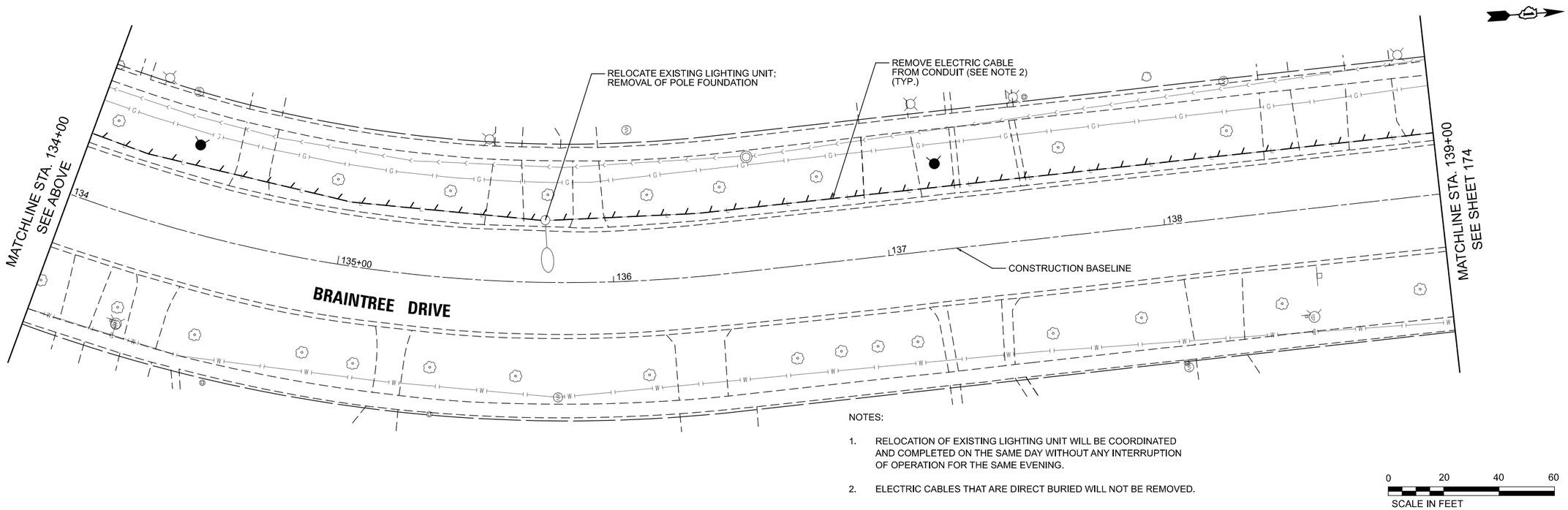

NOTES:

1. RELOCATION OF EXISTING LIGHTING UNIT WILL BE COORDINATED AND COMPLETED ON THE SAME DAY WITHOUT ANY INTERRUPTION OF OPERATION FOR THE SAME EVENING.

2. ELECTRIC CABLES THAT ARE DIRECT BURIED WILL NOT BE REMOVED.

MODEL: Braintree - Plan 1 [Sheet]
FILE NAME: c:\bms\dvltech-pw\petro.kravets\d0140571\3993-\201-sht-Lighting 02-07.dgn

USER NAME = pk	DESIGNED - SJC	REVISED -	
	DRAWN - SJC	REVISED -	
	CHECKED - DNM	REVISED -	
PLOT DATE = 12/15/2025	DATE - 12/12/2025	REVISED -	

STATE OF ILLINOIS
DEPARTMENT OF TRANSPORTATION

BRAINTREE DRIVE
LIGHTING REMOVAL PLAN

SCALE: 1"=20' | SHEET 3 OF 7 SHEETS | STA. 129+00.00 TO STA. 139+00.00

MUN RTE.	SECTION	COUNTY	TOTAL SHEETS	SHEET NO.
4029	23-00146-00-PV	COOK	315	173
		CONTRACT NO. 61M26		
		ILLINOIS	FED. AID PROJECT	

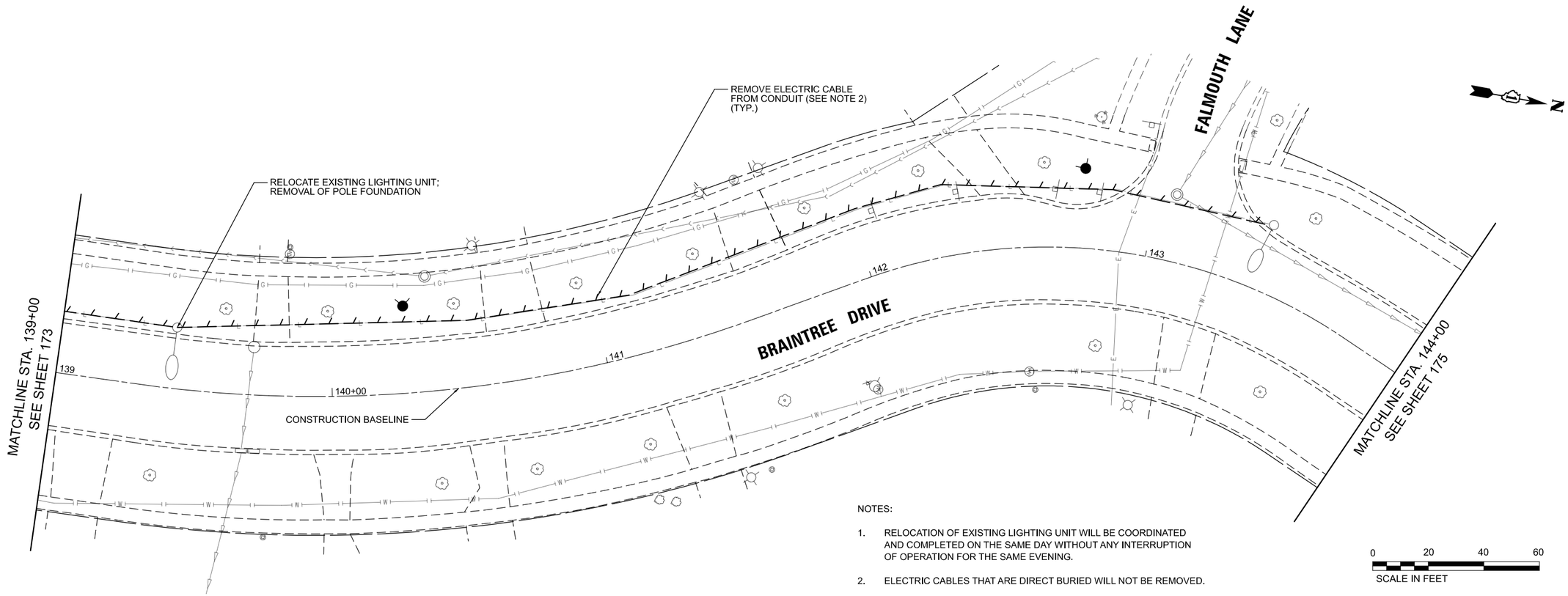

NOTES:

1. RELOCATION OF EXISTING LIGHTING UNIT WILL BE COORDINATED AND COMPLETED ON THE SAME DAY WITHOUT ANY INTERRUPTION OF OPERATION FOR THE SAME EVENING.

2. ELECTRIC CABLES THAT ARE DIRECT BURIED WILL NOT BE REMOVED.

MODEL: Braintree - Plan 3 [Sheet]
FILE NAME: c:\bms\dot\tech-pw\petro.kravets\d0140571\3993-02\01-sht-Lighting 02-07.dgn

USER NAME = pk	DESIGNED - SJC	REVISED -	
	DRAWN - SJC	REVISED -	
	CHECKED - DNM	REVISED -	
PLOT DATE = 12/15/2025	DATE - 12/12/2025	REVISED -	

STATE OF ILLINOIS
DEPARTMENT OF TRANSPORTATION

BRAINTREE DRIVE
LIGHTING REMOVAL PLAN

SCALE: 1"=20' | SHEET 4 OF 7 SHEETS | STA. 139+00.00 TO STA. 144+00.00

MUN RTE.	SECTION	COUNTY	TOTAL SHEETS	SHEET NO.
4029	23-00146-00-PV	COOK	315	174

CONTRACT NO. 61M26

ILLINOIS | FED. AID PROJECT

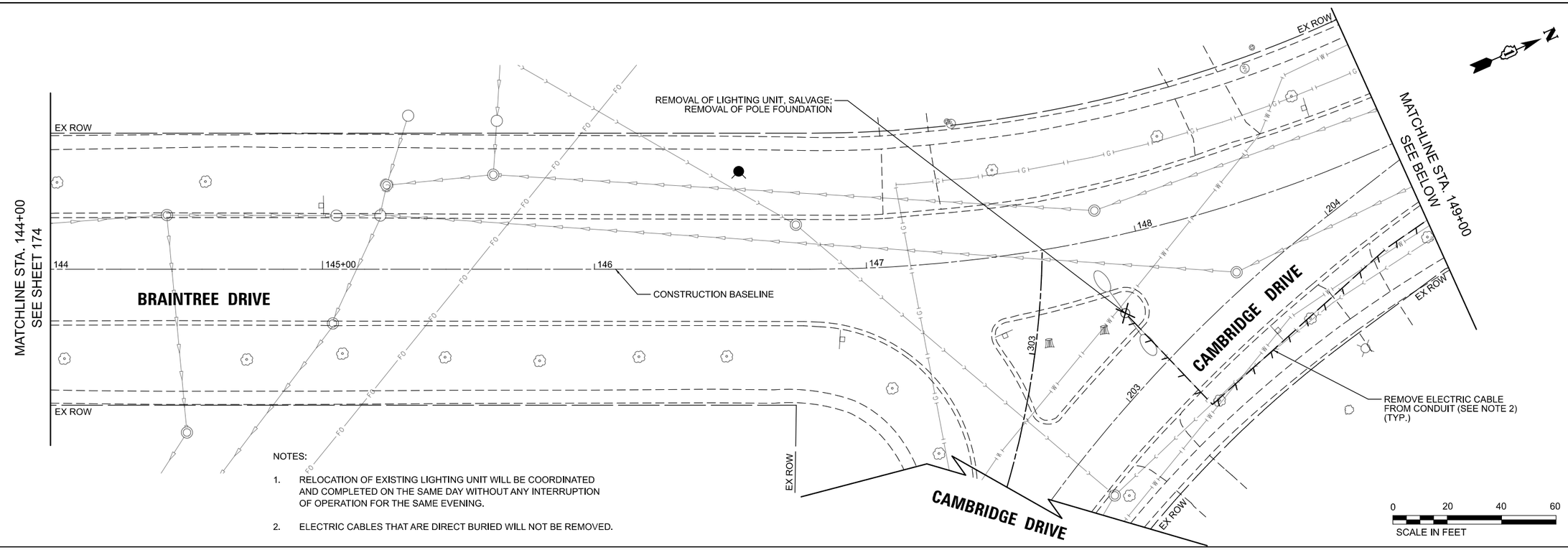

NOTES:

1. RELOCATION OF EXISTING LIGHTING UNIT WILL BE COORDINATED AND COMPLETED ON THE SAME DAY WITHOUT ANY INTERRUPTION OF OPERATION FOR THE SAME EVENING.

2. ELECTRIC CABLES THAT ARE DIRECT BURIED WILL NOT BE REMOVED.

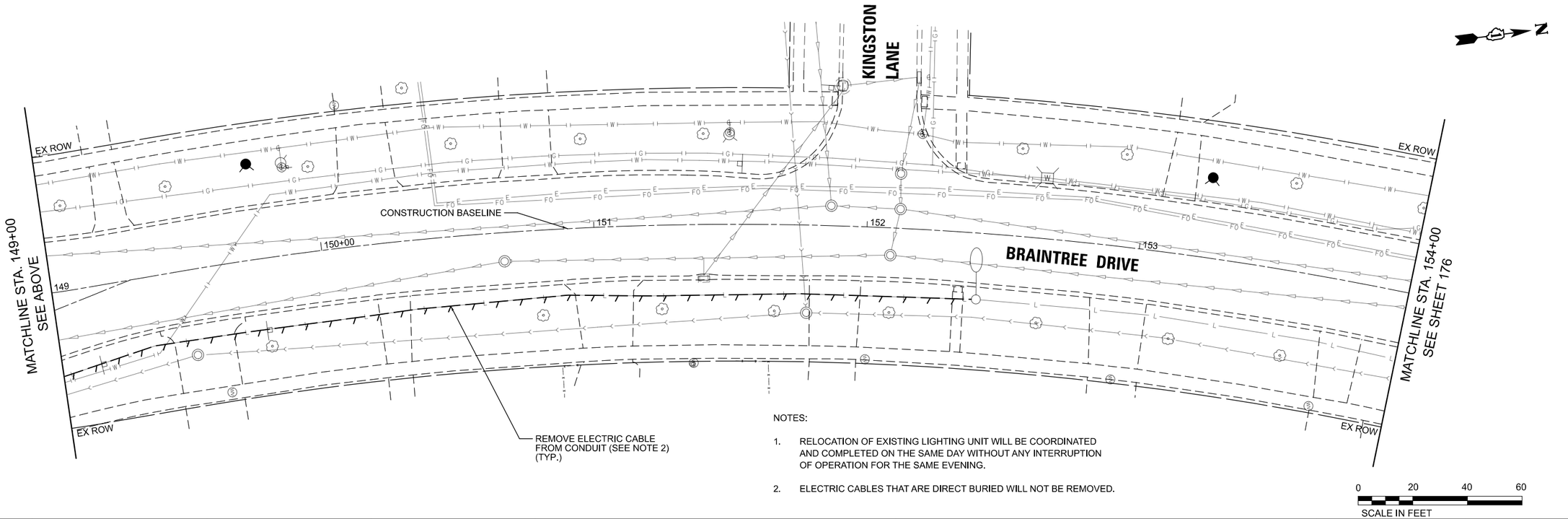

NOTES:

1. RELOCATION OF EXISTING LIGHTING UNIT WILL BE COORDINATED AND COMPLETED ON THE SAME DAY WITHOUT ANY INTERRUPTION OF OPERATION FOR THE SAME EVENING.

2. ELECTRIC CABLES THAT ARE DIRECT BURIED WILL NOT BE REMOVED.

MODEL: Braintree - Plan 22 [Sheet]
FILE NAME: c:\bms\civiltech-pw\petro.kravets\d0140571\3993-0201-sht-Lighting 02-07.dgn

CIVILTECH
Two Pierce Place, Suite 1400
Itasca, Illinois 60143
Tel: 630.773.3900
Fax: 630.773.3975
www.civiltechinc.com

USER NAME = pk	DESIGNED - SJC	REVISED -	
	DRAWN - SJC	REVISED -	
	CHECKED - DNM	REVISED -	
PLOT DATE = 12/15/2025	DATE - 12/12/2025	REVISED -	

STATE OF ILLINOIS
DEPARTMENT OF TRANSPORTATION

BRAINTREE DRIVE
LIGHTING REMOVAL PLAN

SCALE: 1"=20' | SHEET 5 OF 7 SHEETS | STA. 139+00.00 TO STA. 149+00.00

MUN RTE.	SECTION	COUNTY	TOTAL SHEETS	SHEET NO.
4029	23-00146-00-PV	COOK	315	175

CONTRACT NO. 61M26

ILLINOIS | FED. AID PROJECT

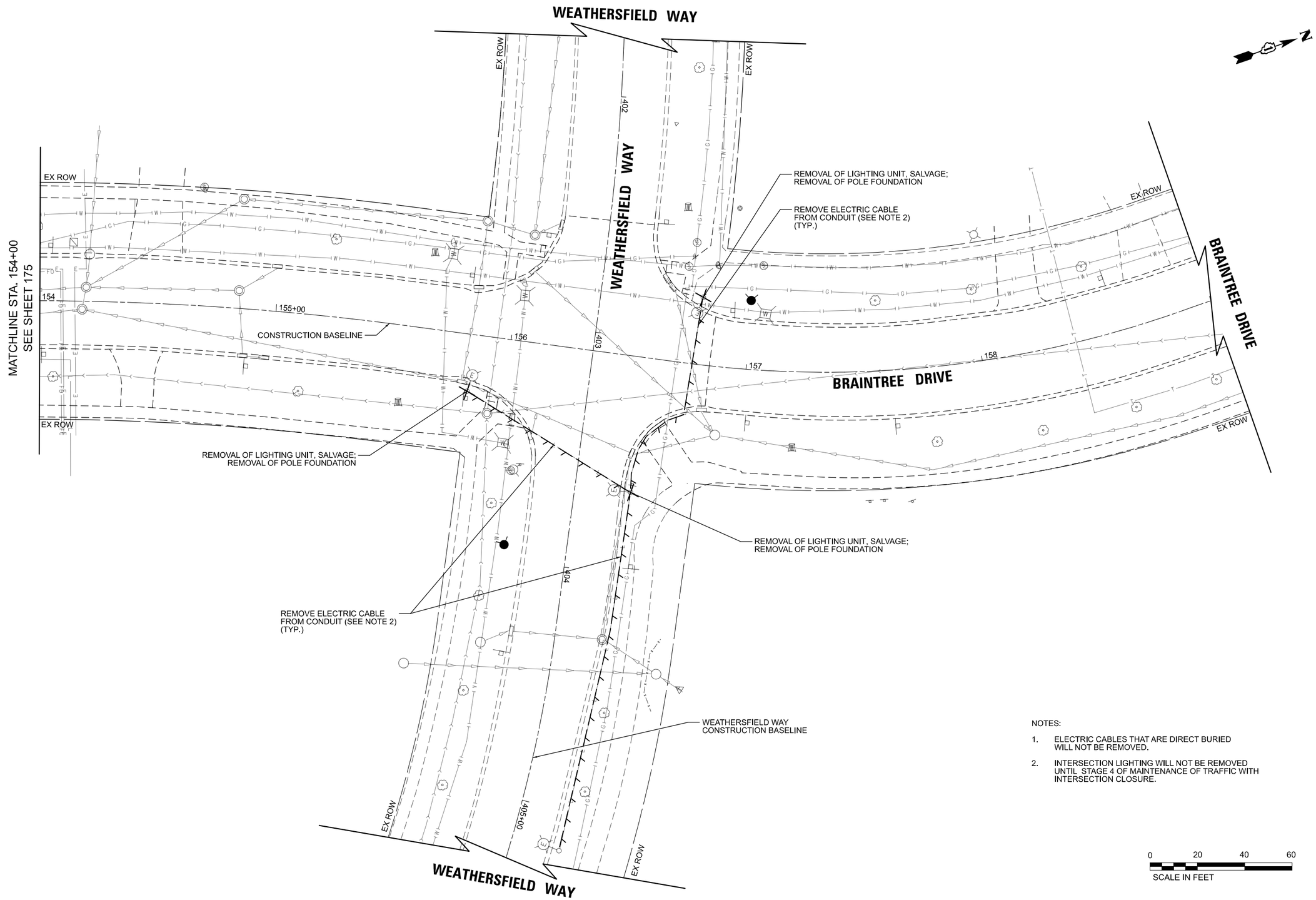

NOTES:

1. ELECTRIC CABLES THAT ARE DIRECT BURIED WILL NOT BE REMOVED.
2. INTERSECTION LIGHTING WILL NOT BE REMOVED UNTIL STAGE 4 OF MAINTENANCE OF TRAFFIC WITH INTERSECTION CLOSURE.

0 20 40 60
SCALE IN FEET

MODEL: Braintree - Plan 25 [Sheet]
FILE NAME: c:\bms\civiltech-pw\petro.kravets.d0140571\3993-0201-sht-Lighting 02-07.dgn

CIVILTECH
Two Pierce Place, Suite 1400
Itasca, Illinois 60143
Tel: 630.773.3900
Fax: 630.773.3975
www.civiltechinc.com

USER NAME = pk	DESIGNED - SJC	REVISED -	
	DRAWN - SJC	REVISED -	
	CHECKED - DNM	REVISED -	
PLOT DATE = 12/15/2025	DATE - 12/12/2025	REVISED -	

STATE OF ILLINOIS
DEPARTMENT OF TRANSPORTATION

BRAINTREE DRIVE
LIGHTING REMOVAL PLAN

SCALE: 1"=20' | SHEET 6 OF 7 SHEETS | STA. 154+00.00 TO STA. 159+00.00

MUN RTE.	SECTION	COUNTY	TOTAL SHEETS	SHEET NO.
4029	23-00146-00-PV	COOK	315	176
		CONTRACT NO. 61M26		
		ILLINOIS	FED. AID PROJECT	

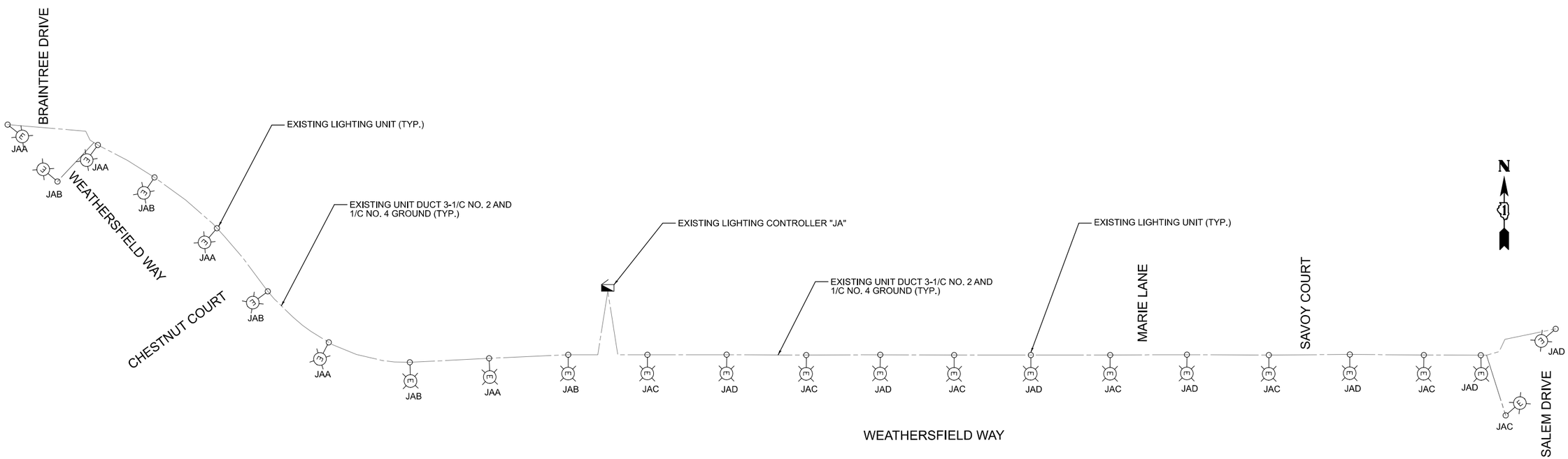

NOTES

1. LIGHTS ON CIRCUIT A AND CIRCUIT C ARE ON RED WIRE
2. LIGHTS ON CIRCUIT B AND CIRCUIT D ARE ON BLACK WIRE

0 20 40 60
SCALE IN FEET

MODEL: Braintree - Ex Wiring [Sheet]
FILE NAME: c:\bms\civiltech-pw\petro.kravets\d0140571\3993-0201-sht-Lighting 08.dgn

CIVILTECH
Two Pierce Place, Suite 1400
Itasca, Illinois 60143
Tel: 630.773.3900
Fax: 630.773.3975
www.civiltechinc.com

USER NAME = pk	DESIGNED - SJC	REVISED -
	DRAWN - SJC	REVISED -
	CHECKED - DNM	REVISED -
PLOT DATE = 12/11/2025	DATE - 12/12/2025	REVISED -

STATE OF ILLINOIS
DEPARTMENT OF TRANSPORTATION

WEATHERSFIELD WAY
EXISTING WIRING DIAGRAM

SCALE: 1"=20' | SHEET 7 OF 7 SHEETS | STA. 154+00.00 TO STA. 159+00.00

MUN RTE.	SECTION	COUNTY	TOTAL SHEETS	SHEET NO.
4029	23-00146-00-PV	COOK	315	177

CONTRACT NO. 61M26

ILLINOIS | FED. AID PROJECT

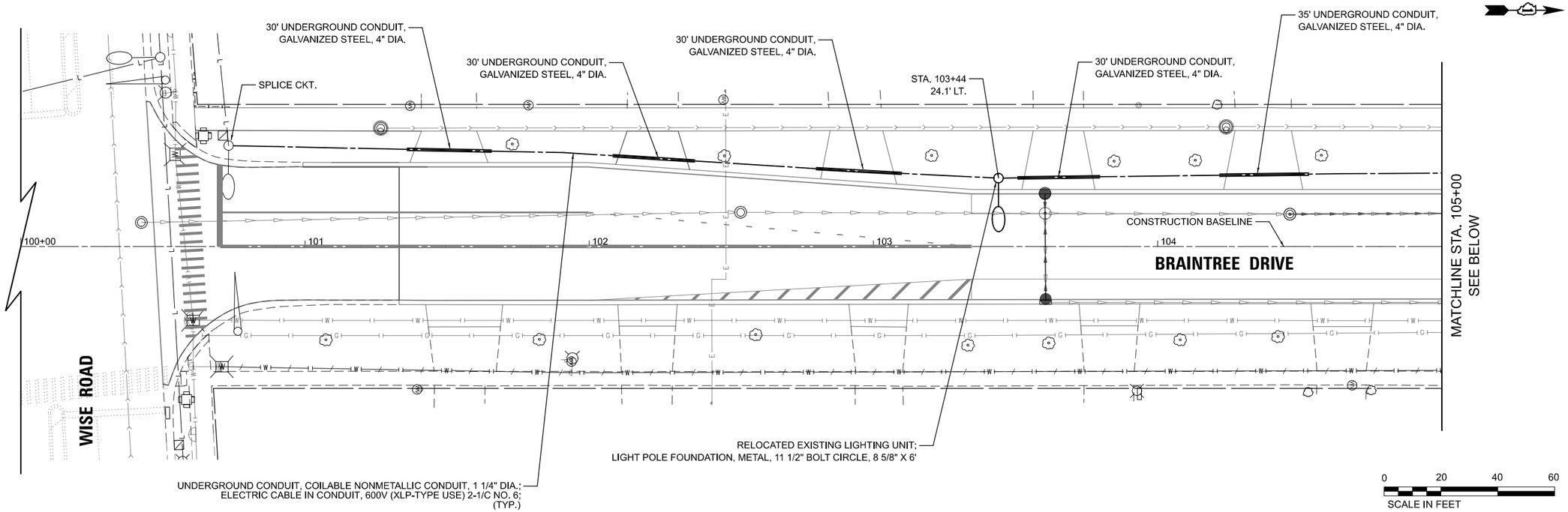

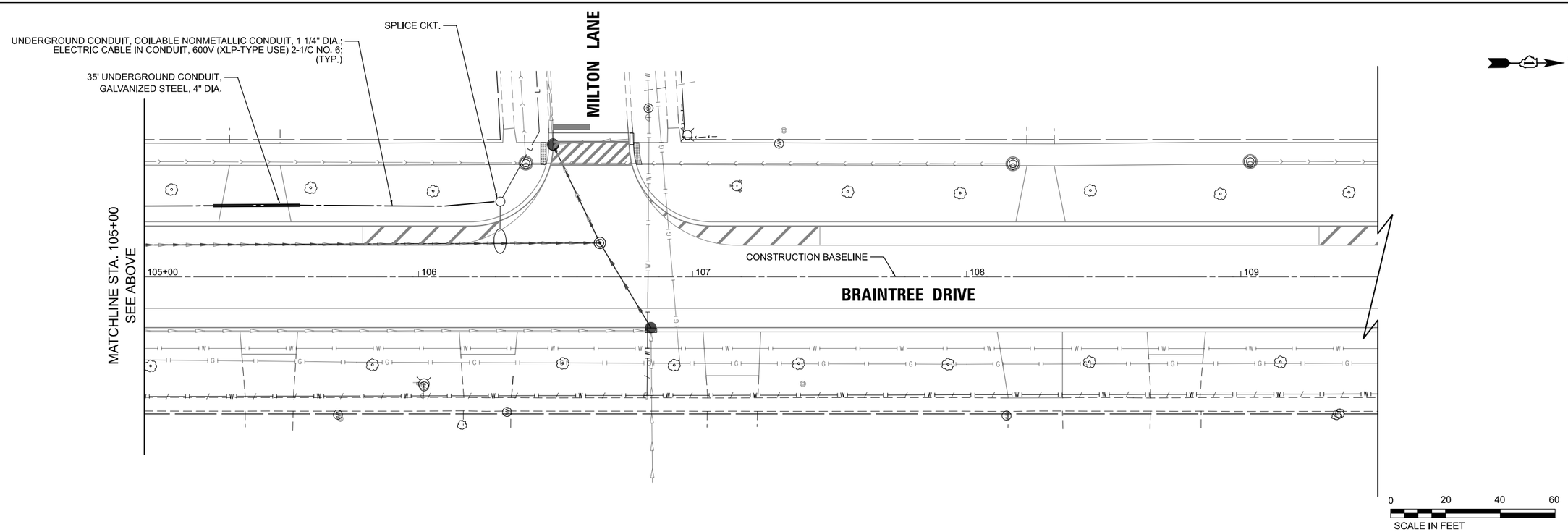

MODEL: Braintree - Plan 0-1 [Sheet]
FILE NAME: c:\bms\dvltech-pw\petro.kravets\d0140571\3993-0201-sht-lighting 09-15.dgn

USER NAME = pk	DESIGNED - SJC	REVISED -	
	DRAWN - SJC	REVISED -	
	CHECKED - DNM	REVISED -	
PLOT DATE = 12/11/2025	DATE - 12/12/2025	REVISED -	

STATE OF ILLINOIS
DEPARTMENT OF TRANSPORTATION

BRAINTREE DRIVE
LIGHTING PROPOSED PLAN

SCALE: 1"=20' | SHEET 1 OF 8 SHEETS | STA. 100+00.00 TO STA. 105+00.00

MUN RTE.	SECTION	COUNTY	TOTAL SHEETS	SHEET NO.
4029	23-00146-00-PV	COOK	315	178
		CONTRACT NO. 61M26		
		ILLINOIS	FED. AID PROJECT	

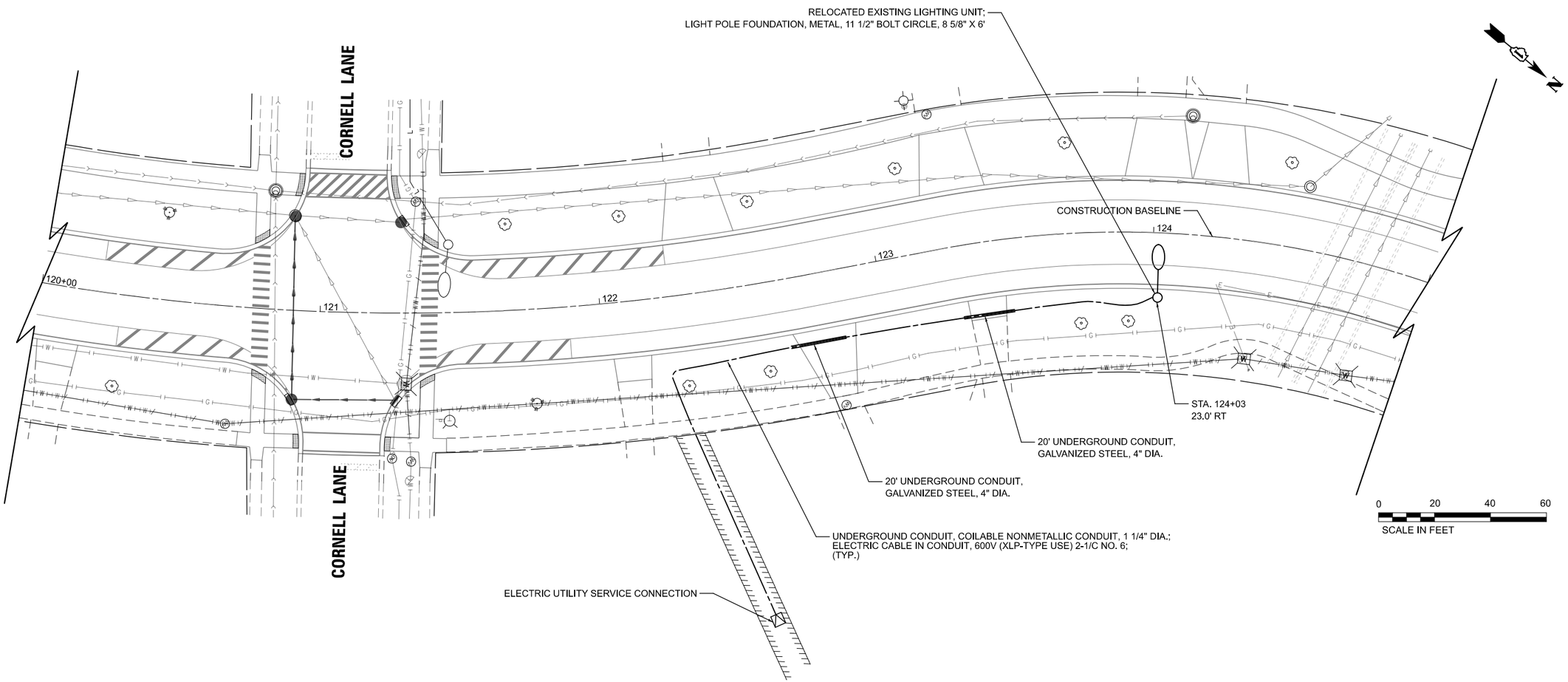

MODEL: Braintree - Plan (1-3 [Sheet]
FILE NAME: c:\bms\dvltech-pw\petro.kravets\d0140571\3993-0201-sht-Lighting 09-15.dgn

USER NAME = pk	DESIGNED - SJC	REVISED -	
	DRAWN - SJC	REVISED -	
	CHECKED - DNM	REVISED -	
PLOT DATE = 12/15/2025	DATE - 12/12/2025	REVISED -	

STATE OF ILLINOIS
DEPARTMENT OF TRANSPORTATION

BRAINTREE DRIVE
LIGHTING PROPOSED PLAN

SCALE: 1"=20' | SHEET 2 OF 8 SHEETS | STA. 120+00.00 TO STA. 125+00.00

MUN RTE.	SECTION	COUNTY	TOTAL SHEETS	SHEET NO.
4029	23-00146-00-PV	COOK	315	179
		CONTRACT NO. 61M26		
		ILLINOIS	FED. AID PROJECT	

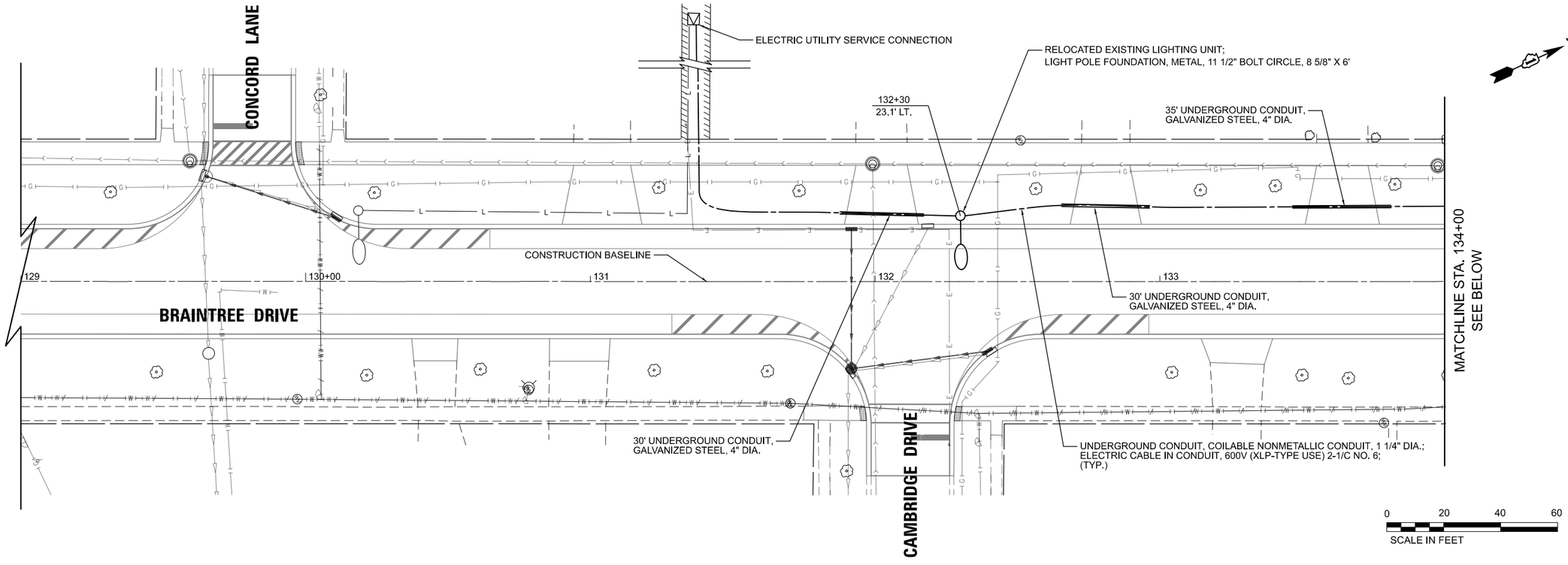

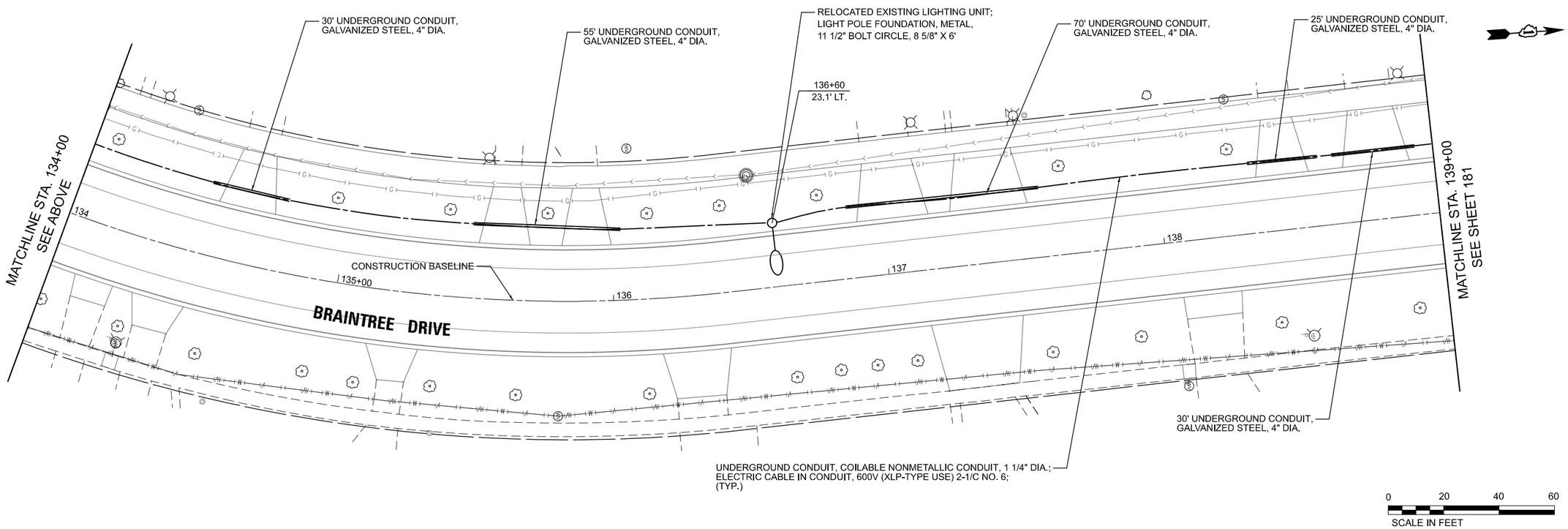

MODEL: Braintree - Plan 1 [Sheet]
FILE NAME: c:\bms\dvltech-pw\petro.kravets\d0140571\3993-\201-sht-lighting 09-15.dgn

USER NAME = pk	DESIGNED - SJC	REVISED -	
	DRAWN - SJC	REVISED -	
	CHECKED - DNM	REVISED -	
PLOT DATE = 12/15/2025	DATE - 12/12/2025	REVISED -	

STATE OF ILLINOIS
DEPARTMENT OF TRANSPORTATION

BRAINTREE DRIVE
LIGHTING PROPOSED PLAN

SCALE: 1"=20' | SHEET 3 OF 8 SHEETS | STA. 129+00.00 TO STA. 139+00.00

MUN RTE.	SECTION	COUNTY	TOTAL SHEETS	SHEET NO.
4029	23-00146-00-PV	COOK	315	180
		CONTRACT NO. 61M26		
		ILLINOIS	FED. AID PROJECT	

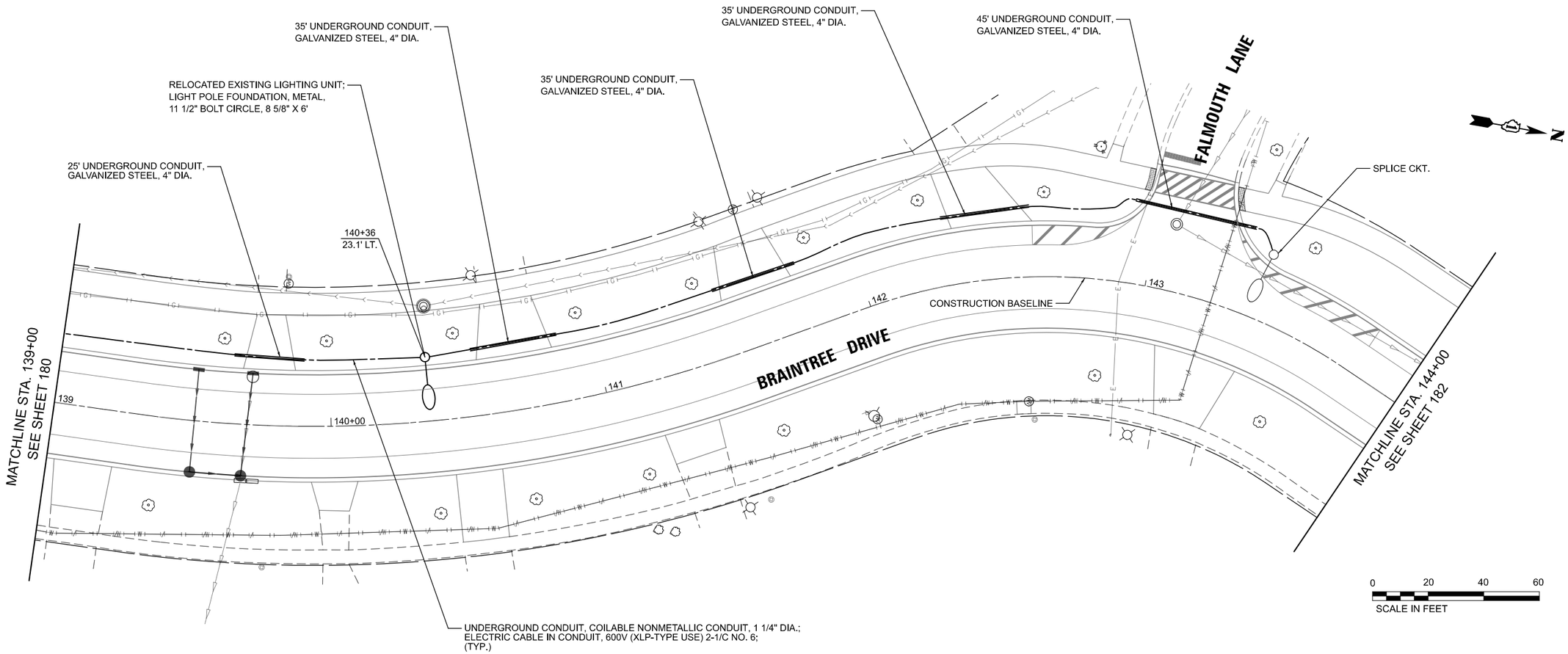

MODEL: Braintree - Plan 3 [Sheet]
FILE NAME: c:\bms\dvlltech-pw\petro.kravets\d0140571\3983-0201-sht-Lighting 09-15.dgn

USER NAME = pk	DESIGNED - SJC	REVISED -	
	DRAWN - SJC	REVISED -	
	CHECKED - DNM	REVISED -	
PLOT DATE = 12/15/2025	DATE - 12/12/2025	REVISED -	

STATE OF ILLINOIS
DEPARTMENT OF TRANSPORTATION

BRAINTREE DRIVE
LIGHTING PROPOSED PLAN

SCALE: 1"=20' | SHEET 4 OF 8 SHEETS | STA. 139+00.00 TO STA. 144+00.00

MUN RTE.	SECTION	COUNTY	TOTAL SHEETS	SHEET NO.
4029	23-00146-00-PV	COOK	315	181
		CONTRACT NO. 61M26		
		ILLINOIS	FED. AID PROJECT	

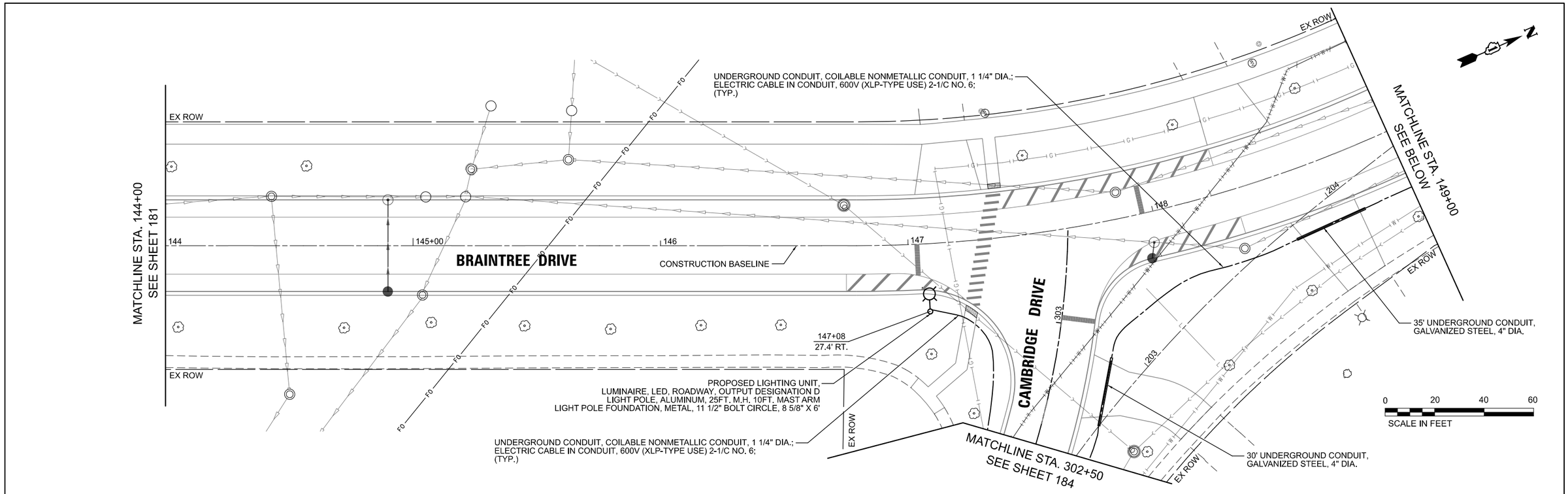

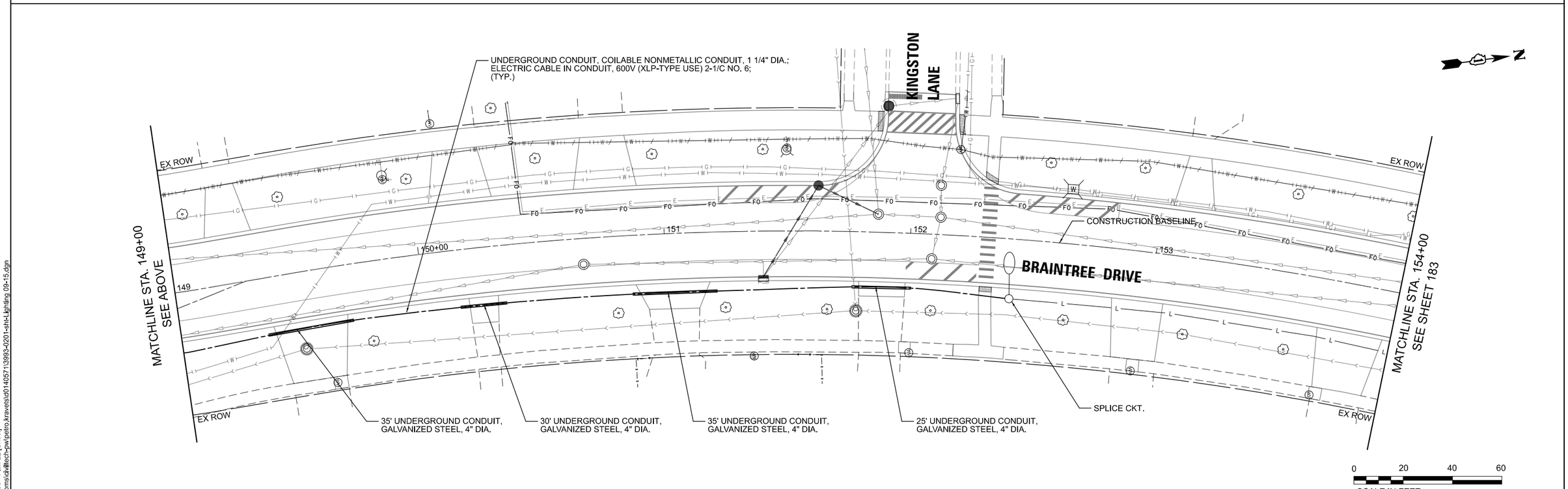

MODEL: Braintree - Plan 22 [Sheet]
FILE NAME: c:\bms\civiltech-pw\petro.kravets\d0140571\3993-0201-sht-lighting 09-15.dgn

CIVILTECH
Two Pierce Place, Suite 1400
Itasca, Illinois 60143
Tel: 630.773.3900
Fax: 630.773.3975
www.civiltechinc.com

USER NAME = pk	DESIGNED - SJC	REVISED -	
	DRAWN - SJC	REVISED -	
	CHECKED - DNM	REVISED -	
PLOT DATE = 12/15/2025	DATE - 12/12/2025	REVISED -	

STATE OF ILLINOIS
DEPARTMENT OF TRANSPORTATION

BRAINTREE DRIVE
LIGHTING PROPOSED PLAN

SCALE: 1"=20' | SHEET 5 OF 8 SHEETS | STA. 139+00.00 TO STA. 149+00.00

MUN RTE.	SECTION	COUNTY	TOTAL SHEETS	SHEET NO.
4029	23-00146-00-PV	COOK	315	182

CONTRACT NO. 61M26

ILLINOIS | FED. AID PROJECT

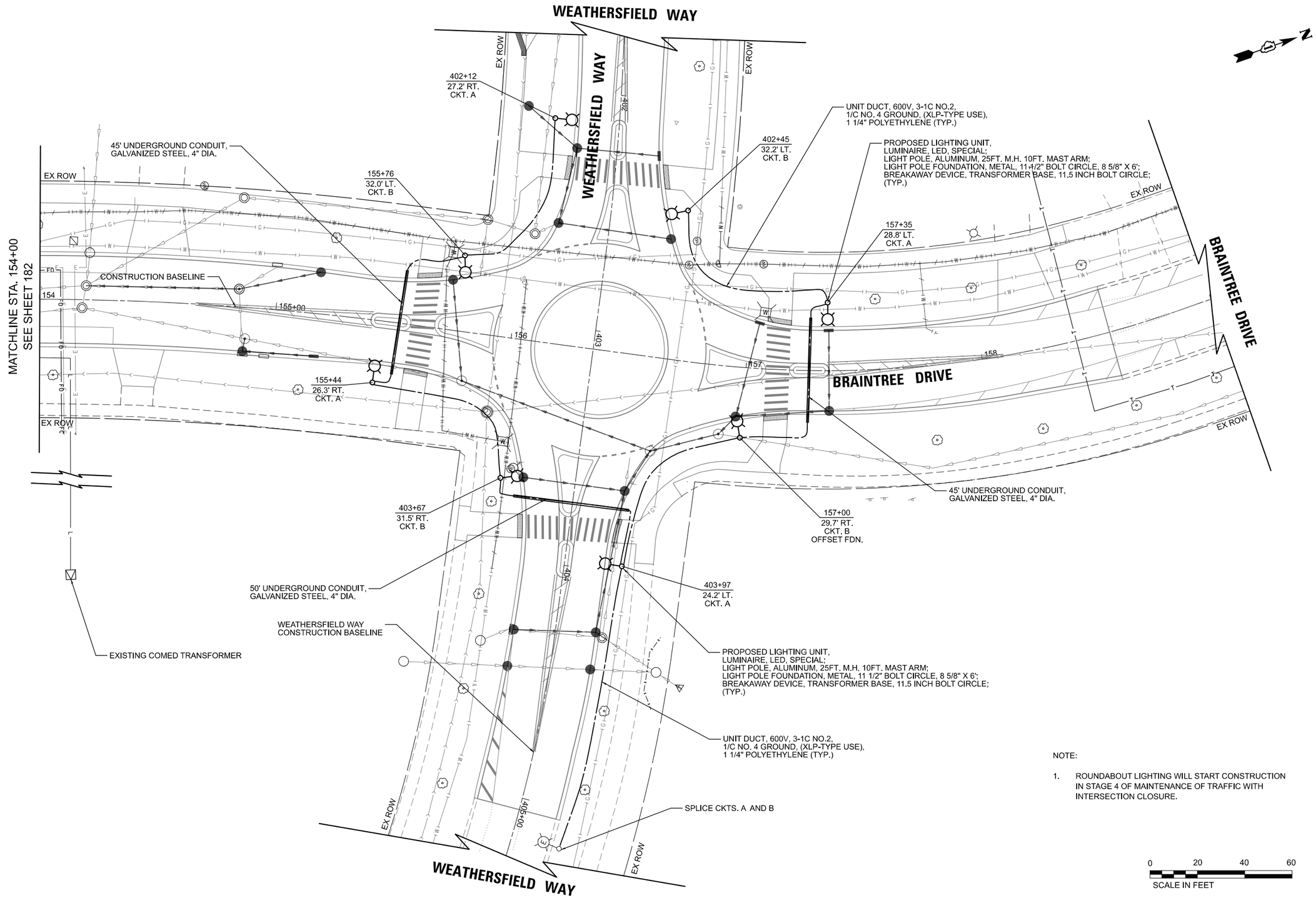

NOTE:

1. ROUNDABOUT LIGHTING WILL START CONSTRUCTION IN STAGE 4 OF MAINTENANCE OF TRAFFIC WITH INTERSECTION CLOSURE.

MODEL: Braintree - Plan 25 [Sheet]
FILE NAME: c:\bms\civiltech-pw\petro.kravets\d0140571\3993-0201-sht-Lighting 09-15.dgn

CIVILTECH
Two Pierce Place, Suite 1400
Itasca, Illinois 60143
Tel: 630.773.3900
Fax: 630.773.3975
www.civiltechinc.com

USER NAME = pk	DESIGNED - SJC	REVISED -	
	DRAWN - SJC	REVISED -	
	CHECKED - DNM	REVISED -	
PLOT DATE = 12/15/2025	DATE - 12/12/2025	REVISED -	

STATE OF ILLINOIS
DEPARTMENT OF TRANSPORTATION

BRAINTREE DRIVE
LIGHTING PROPOSED PLAN

SCALE: 1"=20' | SHEET 6 OF 8 SHEETS | STA. 154+00.00 TO STA. 159+00.00

MUN RTE.	SECTION	COUNTY	TOTAL SHEETS	SHEET NO.
4029	23-00146-00-PV	COOK	315	183

CONTRACT NO. 61M26

ILLINOIS | FED. AID PROJECT

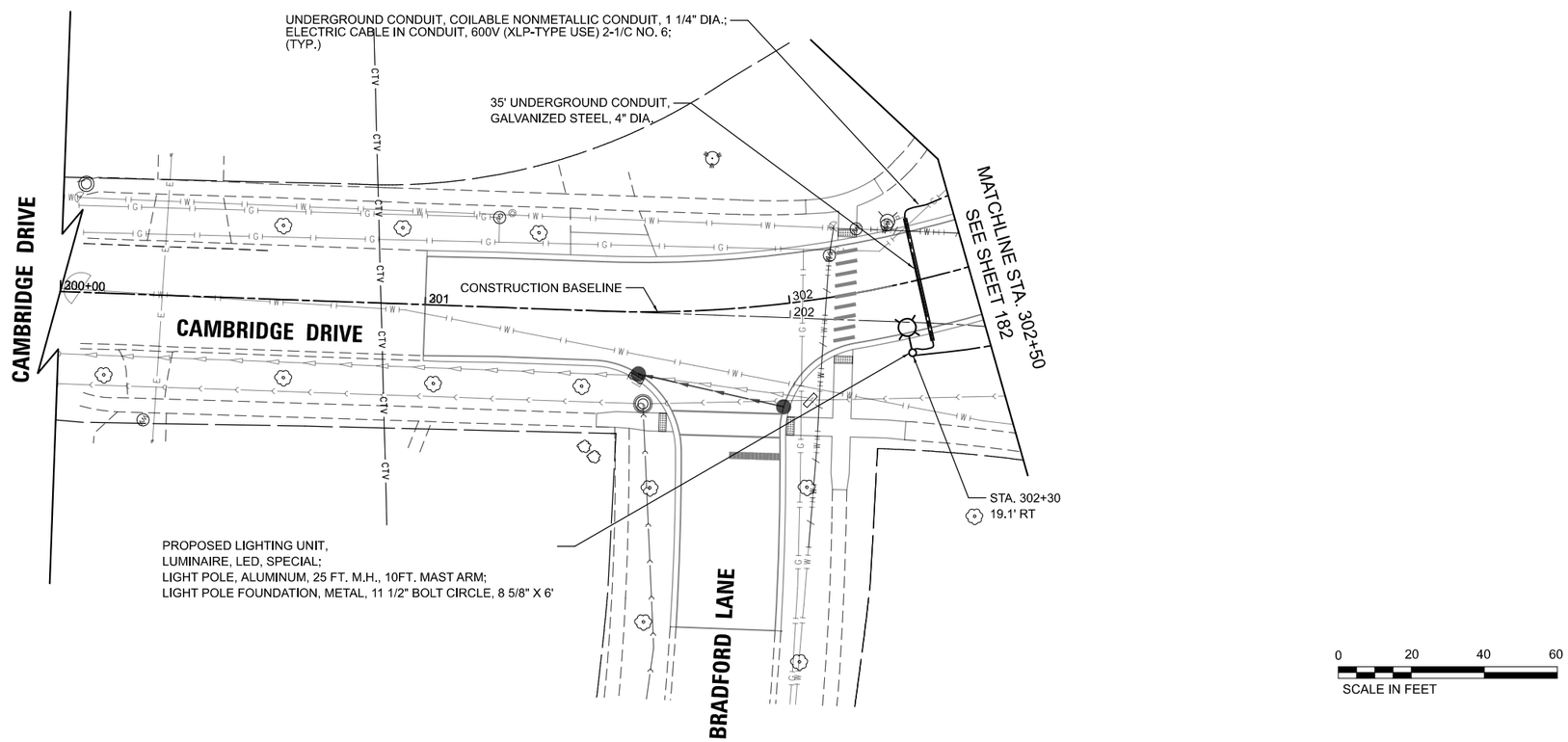

MODEL: Cambridge - Plan 1 [Sheet]
FILE NAME: c:\bms\civiltech-pw\petro.kravets\d0140571\3993-0201-sht-lighting 09-15.dgn

USER NAME = pk	DESIGNED - SJC	REVISED -	
	DRAWN - SJC	REVISED -	
	CHECKED - DNM	REVISED -	
PLOT DATE = 12/15/2025	DATE - 12/12/2025	REVISED -	

STATE OF ILLINOIS
DEPARTMENT OF TRANSPORTATION

CAMBRIDGE DRIVE
LIGHTING PROPOSED PLAN

SCALE: 1"=20' | SHEET 7 OF 8 SHEETS | STA. 300+00.00 TO STA. 302+50.00

MUN RTE.	SECTION	COUNTY	TOTAL SHEETS	SHEET NO.
4029	23-00146-00-PV	COOK	315	184
		CONTRACT NO. 61M26		
		ILLINOIS	FED. AID PROJECT	

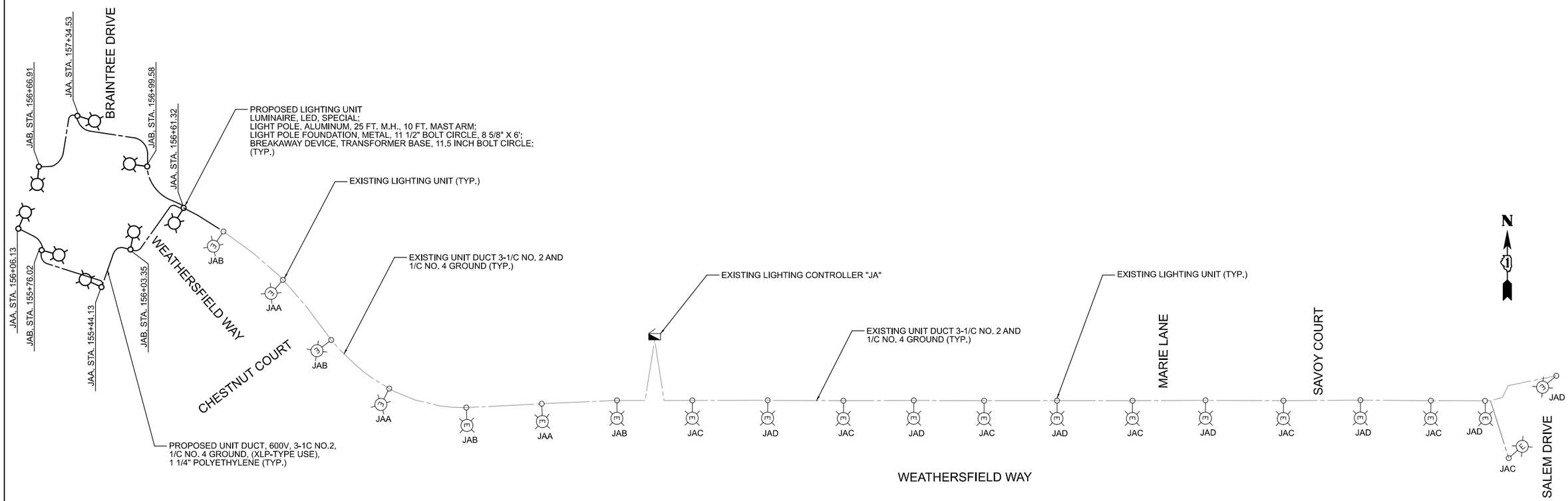

NOTES

1. LIGHTS ON CIRCUIT A AND CIRCUIT C ARE ON RED WIRE
2. LIGHTS ON CIRCUIT B AND CIRCUIT D ARE ON BLACK WIRE

0 20 40 60
SCALE IN FEET

MODEL: Braintree - Pr Wiring [Sheet]
FILE NAME: c:\bms\civiltech-pw\petro.kravets\d0140571\3993-d2201-sht-Lighting 16.dgn

CIVILTECH
Two Pierce Place, Suite 1400
Itasca, Illinois 60143
Tel: 630.773.3900
Fax: 630.773.3975
www.civiltechinc.com

USER NAME = pk	DESIGNED - SJC	REVISED -	
	DRAWN - SJC	REVISED -	
	CHECKED - DNM	REVISED -	
PLOT DATE = 12/11/2025	DATE - 12/12/2025	REVISED -	

STATE OF ILLINOIS
DEPARTMENT OF TRANSPORTATION

WEATHERSFIELD WAY
PROPOSED WIRING DIAGRAM

SCALE: 1"=20' | SHEET 8 OF 8 SHEETS | STA. 154+00.00 TO STA. 159+00.00

MUN RTE.	SECTION	COUNTY	TOTAL SHEETS	SHEET NO.
4029	23-00146-00-PV	COOK	315	185
		CONTRACT NO. 61M26		
		ILLINOIS	FED. AID PROJECT	

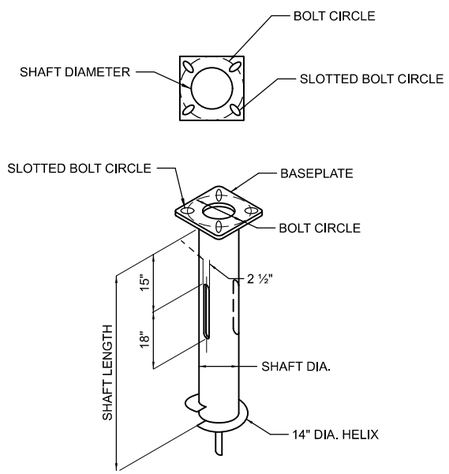

HELIX FOUNDATION SIZE

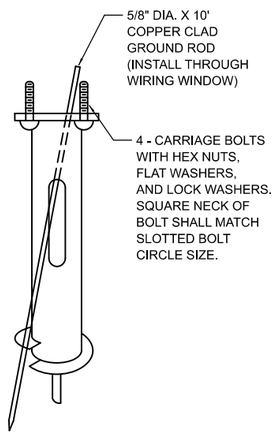

POLE MOUNTING HEIGHT	BOLT CIRCLE	SHAFT DIAMETER	SHAFT LENGTH	BASEPLATE
30 FT.	11½"	8⅝"	6 FT.	12" X 12" X 1"
31 FT. - 35 FT.	11½"	8⅝"	6 FT.	12" X 12" X 1"
36 FT. - 40 FT.	15"	8⅝"	6 FT.	15" X 15" X 1¼"
41 FT. - 45 FT.	15"	8⅝"	6 FT.	15" X 15" X 1¼"
46 FT. - 50 FT.	15"	10"	8 FT.	15" X 15" X 1¼"

NOTES FOR METAL FOUNDATION

1. METAL FOUNDATION SHALL BE THE FOUNDATION USED FOR ALL LIGHTING AND DECORATIVE LIGHTING UNITS UNLESS CONDITIONS IN THE FIELD MAKES IT IMPOSSIBLE TO USE METAL FOUNDATIONS, THEN AN OFFSET FOUNDATION SHALL BE USED WITH ENGINEER APPROVAL.
2. ALL MATERIAL SHALL BE GALVANIZED ACCORDING TO AASHTO M111, UNLESS OTHERWISE SPECIFIED.
3. ALL WELDS SHALL BE CONTINOUS AND NOT LESS THAN ¼" FILLET WELDS. THE WELDED FOUNDATION SHALL BE CAPABLE OF WITHSTANDING 10,000 FT/LBS OF INSTALLATION TORQUE APPLIED ABOUT THE AXIS OF THE FOUNDATION.
4. FABRICATE TWO SLOTS IN THE SHAFT AT 18O DEGREES FOR UNIT DUCTS AND CABLES ENTERING AND LEAVING THE POLE FOUNDATION.
5. TOP PLATE SHALL BE PERMANENTLY MARKED WITH THE CABLING SLOT LOCATIONS.
6. HELIX FOUNDATION SHALL BE INSTALLED VERTICAL AND THE BASEPLATE SHALL BE IN LEVEL. THE BREAKAWAY COUPLINGS AND HARDWARE SHALL NOT BE USED TO ALIGN THE POLE INSTALLATION.
7. THE CABLE TRENCH SHALL BE BACKFILLED AND FIRMLY COMPACTED BEFORE THE INSTALLATION OF THE LIGHT POLE.
8. THE CONTRACTOR SHALL COORDINATE EXTENSION OF ANCHOR BOLTS ABOVE TOP OF THE BASEPLATE WITH THE BREAKAWAY DEVICE MANUFACTURER'S REQUIREMENTS.
9. ANY VOIDS WITHIN THE METAL FOUNDATION SHALL BE FILLED WITH SAND.
10. METAL FOUNDATIONS SHALL BE INSTALLED IN UNDISTURBED SOIL. PREDRILLING A PILOT HOLE AND/OR BACKFILLING AROUND THE FOUNDATION IS NOT ALLOWED.
11. GROUND ROD, 5/8" DIA. x 10', THROUGH FOUNDATION WILL BE REQUIRED AND INCLUDED ON ALL LIGHT POLE FOUNDATIONS INCLUDING METAL FOUNDATIONS.
12. THE METAL FOUNDATION SHALL NOT BE INSTALLED TO A TORQUE WHICH EXCEEDS THE MANUFACTURER'S MAXIMUM TORQUE RATING NOR SHALL IT BE INSTALLED TO AN INSTALLATION TORQUE VALUE OF LESS THAN 3,500 FT LB. METAL FOUNDATIONS THAT ARE NOT INSTALLED TO FULL INSTALLATION DEPTH OR DO NOT ACHIEVE THE MINIMUM INSTALLATION TORQUE SHALL BE REMOVED AND REPLACED WITH A CONCRETE FOUNDATION AT NO ADDITIONAL COST.
13. THE BASEPLATE SHALL BE PERPENDICULAR TO THE SHAFT AXIS (| 1^) AND THE HOLE CENTERLINE SHALL BE CONCENTRIC (| 0.188) TO THE SHAFT AXIS.
14. THE PILOT POINT AND SHAFT AXIS SHALL BE CONCENTRIC (| 0.125) AND IN LINE (| 2^).
15. THE BASEPLATE SHALL BE STAMPED WITH THE MANUFACTURERS NAME AND DATE OF MANUFACTURE.
16. ALL MATERIAL IS TO BE NEW, UNUSED AND MILL TRACEABLE MEETING THE FOLLOWING SPECIFICATIONS:

BASE PLATE:	AASHTO M 270M, GRADE 36 (M270M, GRADE 250)
SHAFT:	ASTM A 252 - (LATEST REVISION) GRADE 2, (PHOSPHOROUS 0.04% MAXIMUM, SULFUR 0.05% MAXIMUM)
HELIX SCREW:	AASHTO M 183 (ASTM A 635) (LATEST REVISION)
PILOT POINT:	AASHTO M 270 (ASTM A 575) (LATEST REVISION)
ANCHOR RODS/STUDS:	AASHTO M 314 (ASTM F 1554) (LATEST REVISION)
HEXAGON NUTS:	AASHTO M 291M (ASTM A 563) GRADE DH, OR AASHTO M 292 (ASTM A 194) GRADE 2H (LATEST REVISION)
WASHERS:	AASHTO M 293 (ASTM F 436) (LATEST REVISION)

POLE FOUNDATION METAL

HELIX MUST BE FORMED BY MATCHING METAL DIE
(SIDE VIEW OF TRUE HELICAL FORM)

NOTES:

1. IN GRASS COVERED AREAS, THE BACKFILL MAY BE COMPACTED EARTH.
2. TRENCHES WITHIN 2' OF PROPOSED OR EXISTING STREETS, DRIVEWAYS, OR SIDEWALKS WILL BE BACKFILLED WITH COMPACTED FA-6 SAND OR LIMESTONE SCREENINGS.
3. WARNING TAPE WILL BE RED WITH BLACK LETTERING TO READ "CAUTION - ELECTRIC LINE BURIED BELOW".
4. ALL GRASS COVERED AREAS DISTURBED DURING CONSTRUCTION WILL BE RESTORED WITH 4" OF TOPSOIL AND SOD.

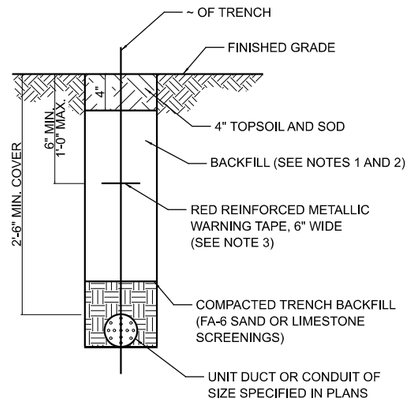

TYPICAL TRENCH CROSS SECTION

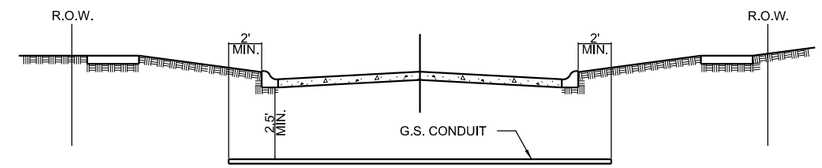

STREET CROSSING

NOTES
1. PAVEMENT INCLUDES ROADS, DRIVEWAYS, SIDEWALKS, AND BIKE PATHS.
2. CONDUIT SHALL BE HEAVY WALL RIGID GALVANIZED STEEL CONDUIT, MINIMUM 2" DIAMETER.
3. CONDUIT SHALL EXTEND A MINIMUM OF 2 FT. BEYOND BACK OF CURB OR EDGE OF PAVEMENT.
4. CONDUIT SHALL BE A MINIMUM OF 2.5 FT. BELOW BOTTOM OF PAVEMENT.

ELECTRICAL CONDUIT UNDER PAVEMENT

ALL CONDUCTORS SHALL BE INDIVIDUALLY COLOR-CODED. THE COLOR-CODED INSULATION FOR EACH WIRE SHALL RUN THE ENTIRE LENGTH OF THE CONDUCTOR FROM THE CIRCUIT BREAKER TO THE LUMINAIRE WITH THE SAME COLOR.

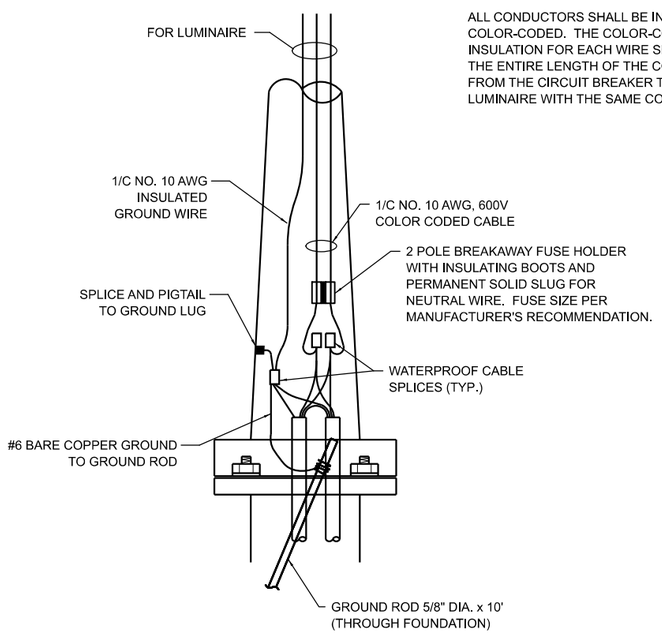

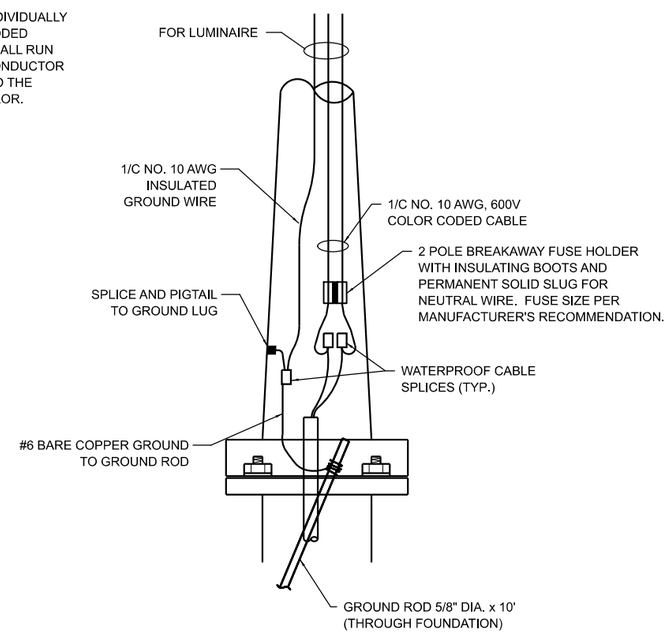

ROADWAY POLE HANDHOLE WIRING DIAGRAM

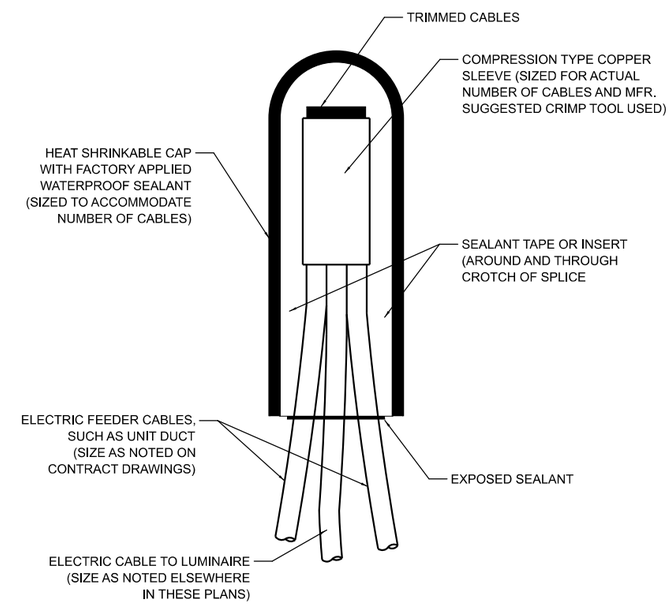

NOTE: NUMBER OF CABLES IN SPLICE MAY VARY

SPLICING ELECTRIC CABLES BASIC MATERIALS AND METHODS

MODEL: Sheet-02 [Sheet]
FILE NAME: c:\bms\dvlltech-pw\petro.kravets\d0140571\3993-0201-sht-lighting 17-19.dgn

USER NAME = pk	DESIGNED - SJC	REVISED -	STATE OF ILLINOIS DEPARTMENT OF TRANSPORTATION
	DRAWN - SJC	REVISED -	
	CHECKED - DNM	REVISED -	
PLOT DATE = 12/15/2025	DATE - 12/12/2025	REVISED -	

BRAINTREE DRIVE LIGHTING DETAILS

SCALE: N.T.S. | SHEET 2 OF 3 SHEETS | STA. | TO STA.

MUN RTE.	SECTION	COUNTY	TOTAL SHEETS	SHEET NO.
4029	23-00146-00-PV	COOK	315	187

CONTRACT NO. 61M26

ILLINOIS | FED. AID PROJECT

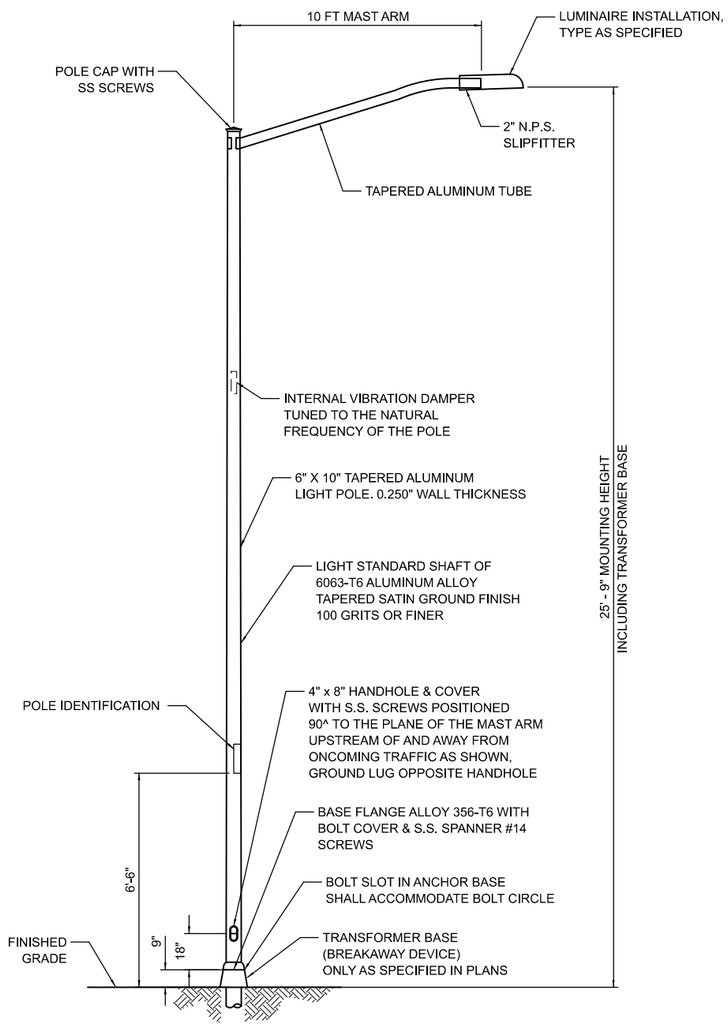

NOTES:

1. HEAT TREATMENT SHALL BE APPLIED AFTER WELDING.
2. DESIGN AND FABRICATION OF THE POLE SHAFT, ARMS, TENONS, AND ATTACHMENTS SHALL BE ACCORDING TO AASHTO "LRFD SPECIFICATIONS FOR STRUCTURAL SUPPORTS FOR HIGHWAY SIGNS, LUMINAIRES AND TRAFFIC SIGNALS" CURRENT AT THE TIME THE PROJECT IS ADVERTISED.
3. POLES AND ARMS SHALL BE BUILT TO TOLERANCES THAT WILL ALLOW CONSISTENT INTERCHANGIBILITY TO FACILITATE REPLACEMENT OF ARMS AND POLES.
4. A DECAL COMPLYING WITH THE ANSI STANDARD SHALL BE PERMANENTLY ATTACHED TO THE LUMINAIRE AT THE FACTORY. THE DECK SHALL ALLOW A VIEWER AT GROUND LEVEL TO IDENTIFY THE WATTAGE AND LUMINAIRE PHOTOMETRIC DISTRIBUTION.

LIGHTING UNIT

(NOT TO SCALE)

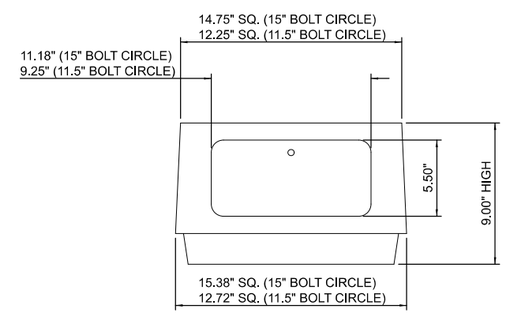

NOTES:

1. DOORS: ALUMINUM ONLY.
2. HARDWARE: CARRIAGE BOLTS SHALL BE USED WITH FLAT WASHER, LOCK WASHER, AND NUTS. NO THREADED ROD ALLOWED.
3. GROUNDING: AREA WHERE THE GROUND WIRE ATTACHES TO TRANSFORMER BASE MUST BE SCRATCHED TO ENSURE EFFECTIVE BONDING.

TRANSFORMER BASE
(BREAKAWAY DEVICE)

(MEET LATEST AASHTO REQUIREMENTS)

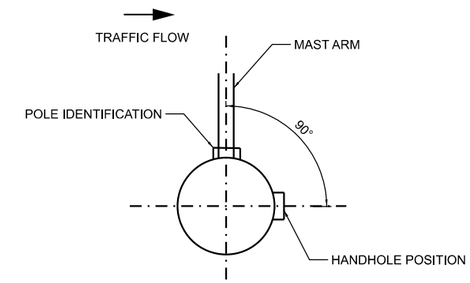

POSITION OF HANDHOLE
AND POLE IDENTIFICATION

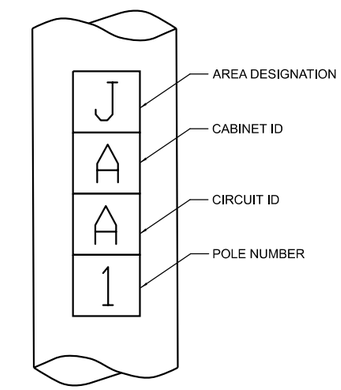

NOTES:

1. 4" HIGH WHITE LETTERS ON RED, PRESSURE SENSITIVE AND REFLECTIVE BACKGROUND. ONE PIECE STICKER PER CHARACTER 4" x 4 1/2"
2. FONT TO BE T2000 HWYC.

POLE IDENTIFICATION

MODEL: Sheet-03 [Sheet]
FILE NAME: c:\bms\civiltech-pw\petro.kravets\d0140571\3993-0201-sht-Lighting 17-19.dgn

USER NAME = pk	DESIGNED - SJC	REVISED -	
	DRAWN - SJC	REVISED -	
	CHECKED - DNM	REVISED -	
PLOT DATE = 12/15/2025	DATE - 12/12/2025	REVISED -	

STATE OF ILLINOIS
DEPARTMENT OF TRANSPORTATION

BRAINTREE DRIVE
LIGHTING DETAILS

SCALE: N.T.S. | SHEET 3 OF 3 SHEETS | STA. | TO STA.

MUN RTE.	SECTION	COUNTY	TOTAL SHEETS	SHEET NO.
4029	23-00146-00-PV	COOK	315	188

CONTRACT NO. 61M26

ILLINOIS | FED. AID PROJECT

AUTOCAD2006

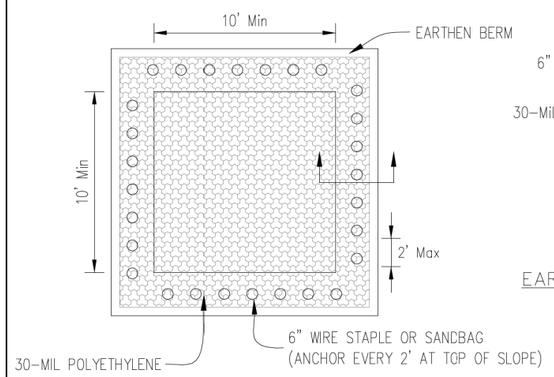

PLAN VIEW

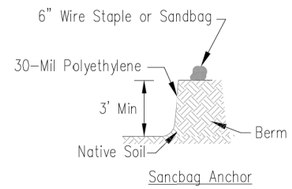

EARTHEN BERM ANCHOR SECTIONS

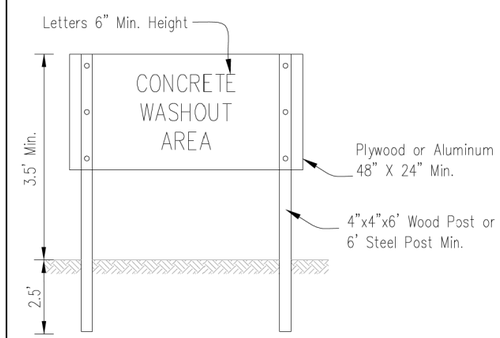

SIGN DETAIL

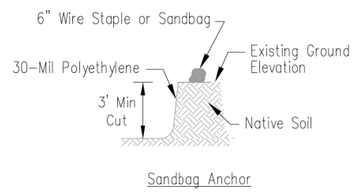

SUBGRADE ANCHOR SECTIONS

NOTES:

1. Maintaining temporary concrete washout facilities shall include removing and disposing of hardend concrete and/or slurry and returning the faciliities to a functional condition.

2. Facility shall be cleaned or reconstructed in a new area once washout becomes two-thirds full.

Sheet 2 of 3	File No. / Drawing No. IUM-654ET	TEMPORARY CONCRETE WASHOUT FACILITY - EARTHEN TYPE	Designed	Date
			Drawn B. JOHNSON	6/08
			Checked	
			Approved	

AUTOCAD2006

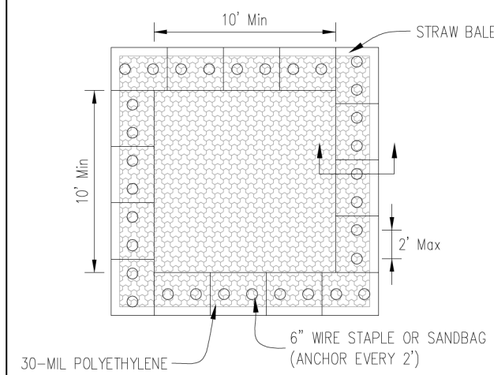

PLAN VIEW

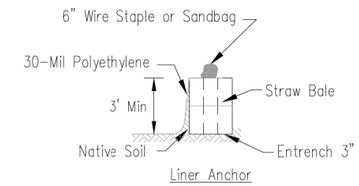

STRAW BALE ANCHOR SECTIONS

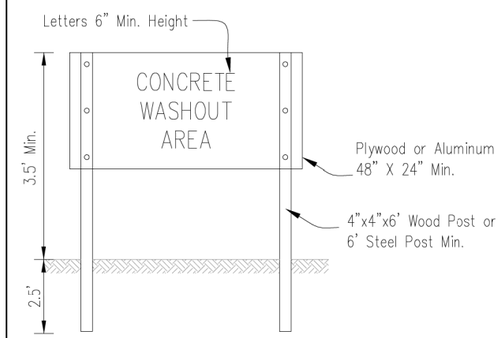

SIGN DETAIL

NOTES:

1. Maintaining temporary concrete washout facilities shall include removing and disposing of hardend concrete and/or slurry and returning the faciliities to a functional condition.

2. Facility shall be cleaned or reconstructed in a new area once washout becomes two-thirds full.

3. Each straw bale is to be staked in place using (2) 2"x2"x4' wooden stakes.

Sheet 1 of 3	File No. / Drawing No. IUM-654SB	TEMPORARY CONCRETE WASHOUT FACILITY - STRAW BALE	Designed	Date
			Drawn B. JOHNSON	6/08
			Checked	
			Approved	

MODEL: Sheet-01 [Sheet]
FILE NAME: c:\bms\dvltech-pw\petro.kravets\d0140573\Construction Details.dgn

USER NAME = pk	DESIGNED -	REVISED -	STATE OF ILLINOIS DEPARTMENT OF TRANSPORTATION
	DRAWN -	REVISED -	
	CHECKED -	REVISED -	
PLOT DATE = 12/15/2025	DATE - 12/12/2025	REVISED -	

BRAINTREE DRIVE
CONSTRUCTION DETAILS

SCALE: N.T.S. | SHEET 1 OF 9 SHEETS | STA. | TO STA.

MUN RTE.	SECTION	COUNTY	TOTAL SHEETS	SHEET NO.
4029	23-00146-00-PV	COOK	315	189

CONTRACT NO. 61M26

ILLINOIS | FED. AID PROJECT

AUTOCAD2006

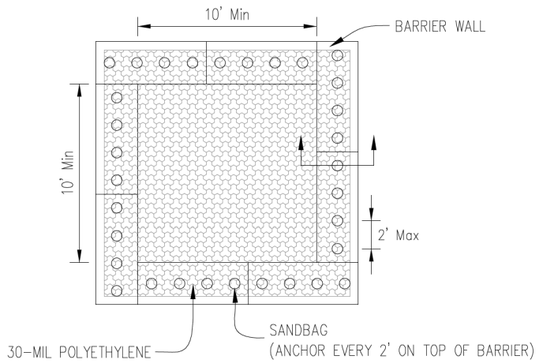

PLAN VIEW

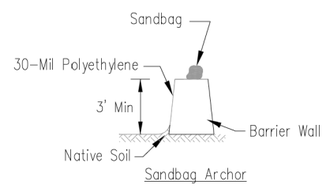

BARRIER WALL ANCHOR SECTION

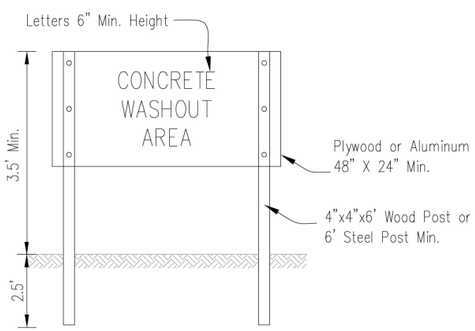

SIGN DETAIL

NOTES:

1. Maintaining temporary concrete washout facilities shall include removing and disposing of hardend concrete and/or slurry and returning the faciliities to a functional condition.

2. Facility shall be cleaned or reconstructed in a new area once washout becomes two-thirds full.

Sheet 3 of 3	Drawing No. IUM-563BW	File No.	TEMPORARY CONCRETE WASHOUT FACILITY – BARRIER WALL	Designed ____ Date ____ Drawn B. JOHNSON 6/08 Checked ____ Approved ____

INLET PROTECTION - PAVED AREAS
DROP-IN PROTECTION

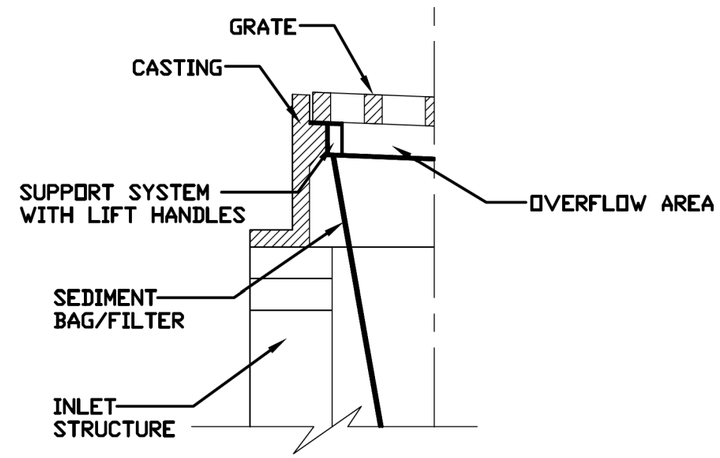

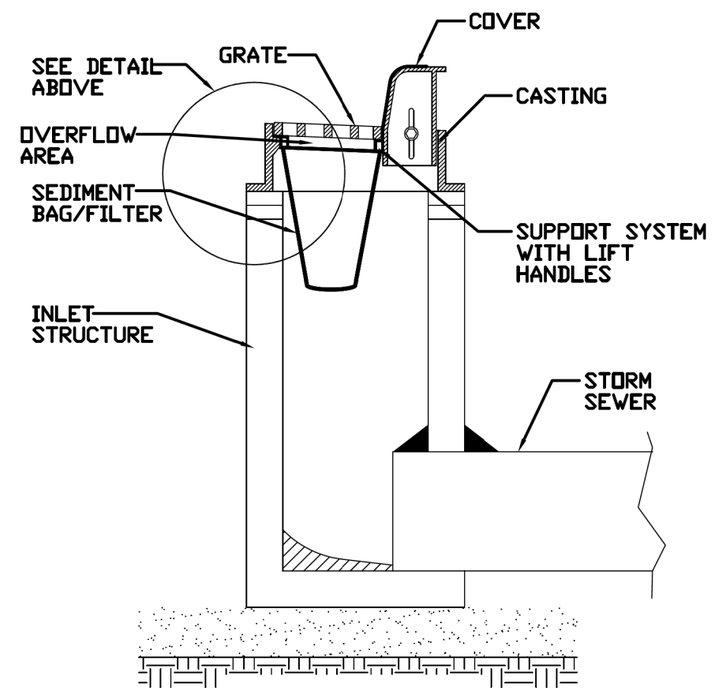

REFERENCE Project ____ Designed ____ Date ____ Checked ____ Date ____ Approved ____ Date ____		STANDARD DWG. NO. IUM-561D SHEET 1 OF 1 DATE 01-11-11

MODEL: Sheet-02 [Sheet]
FILE NAME: c:\bms\civiltech-pw\petro.kravets\d0140573\Construction Details.dgn

USER NAME = pk	DESIGNED -	REVISED -	STATE OF ILLINOIS DEPARTMENT OF TRANSPORTATION
	DRAWN -	REVISED -	
	CHECKED -	REVISED -	
PLOT DATE = 12/15/2025	DATE - 12/12/2025	REVISED -	

BRAINTREE DRIVE
CONSTRUCTION DETAILS

SCALE: N.T.S. | SHEET 2 OF 9 SHEETS | STA. | TO STA.

MUN RTE.	SECTION	COUNTY	TOTAL SHEETS	SHEET NO.
4029	23-00146-00-PV	COOK	315	190

CONTRACT NO. 61M26

ILLINOIS | FED. AID PROJECT

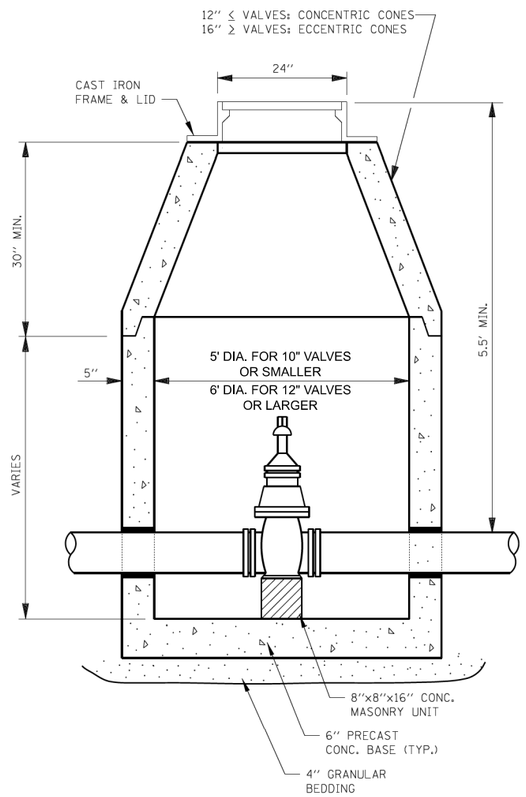

VALVE VAULT TYPE A

NOTE:
ALL TEES, CROSSES, BENDS, PLUGS, AND HYDRANTS SHALL BE PROPERLY BLOCKED.

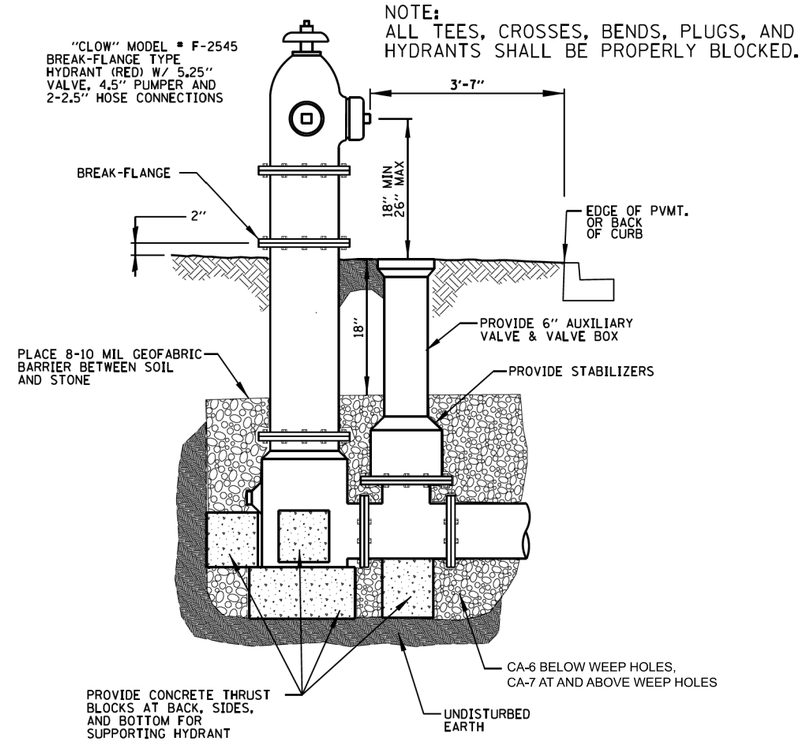

FIRE HYDRANT

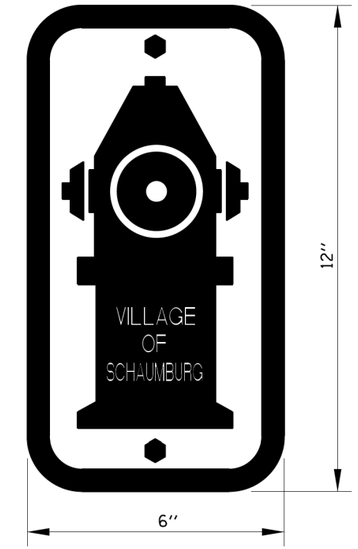

HYDRANT SIGN

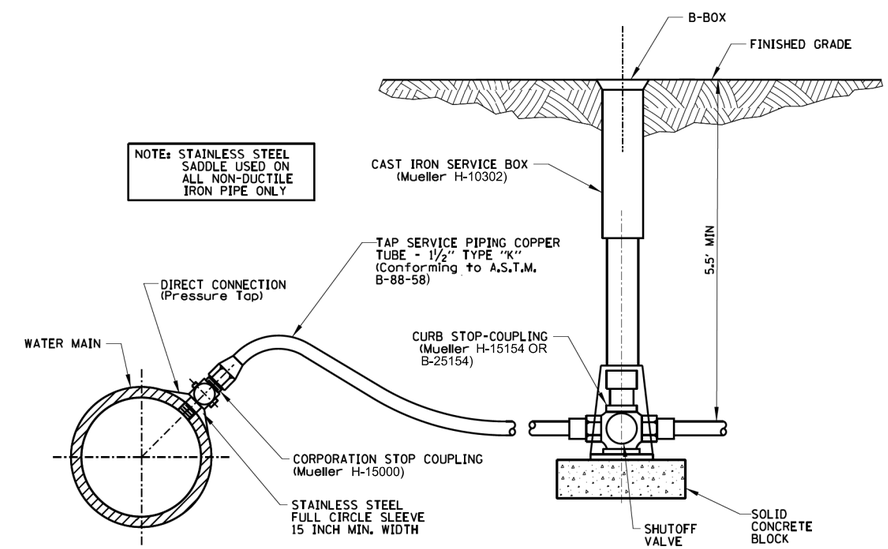

RESIDENTIAL WATER SERVICE

MODEL: Sheet-03 [Sheet]
FILE NAME: c:\bms\ckvillech-pw\petro.kravets\d0140573\Construction Details.dgn

USER NAME = pk	DESIGNED -	REVISED -	
	DRAWN -	REVISED -	
	CHECKED -	REVISED -	
PLOT DATE = 12/15/2025	DATE - 12/12/2025	REVISED -	

STATE OF ILLINOIS
DEPARTMENT OF TRANSPORTATION

BRAINTREE DRIVE
CONSTRUCTION DETAILS

SCALE: N.T.S. | SHEET 3 OF 9 SHEETS | STA. TO STA.

MUN RTE.	SECTION	COUNTY	TOTAL SHEETS	SHEET NO.
4029	23-00146-00-PV	COOK	315	191

CONTRACT NO. 61M26

ILLINOIS | FED. AID PROJECT

PROPOSED SEWER LINE WITH 18" MINIMUM VERTICAL SEPARATION ABOVE EXISTING WATER MAIN

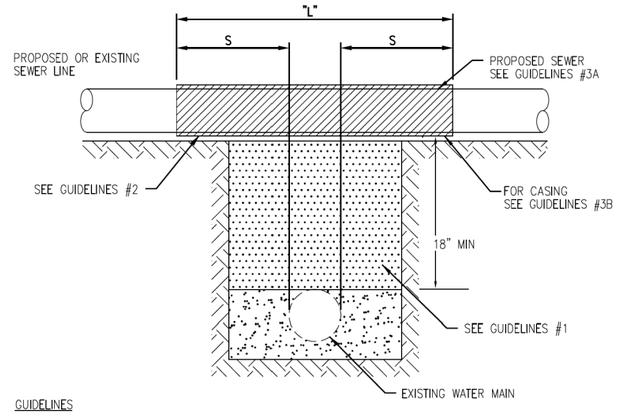

GUIDELINES

1. IF SELECT GRANULAR BACKFILL EXISTS: REMOVE WITHIN WIDTH OF PROPOSED SEWER TRENCH AND REPLACE WITH SELECT EXCAVATED MATERIAL (CLASS IV) AND COMPACT
2. OMIT SELECT GRANULAR EMBEDMENT AND GRANULAR BACKFILL TO ONE (1) FOOT OVER TOP OF SEWER AND USE SELECT EXCAVATED MATERIAL (CLASS IV) AND COMPACT THE LENGTH OF "L" FEET.
3. A) CONSTRUCT "L" FEET OF PROPOSED SEWER OF WATER MAIN MATERIAL AND PRESSURE TEST, OR;

   B) USE "L" FEET OF WATER MAIN MATERIAL FOR CASING OF PROPOSED SEWER AND SEAL ENDS OF CASING.

NOTE: "S" THE LENGTH NECESSARY TO PROVIDE 10 FEET OF SEPARATION AS MEASURED PERPENDICULAR TO THE EXISTING WATER MAIN

*BASED ON STANDARD SPECIFICATIONS FOR WATER AND SEWER MAIN CONSTRUCTION IN ILLINOIS.

PROPOSED SEWER LINE BELOW EXISTING WATER MAIN WITH LESS THAN 18" MINIMUM VERTICAL SEPARATION

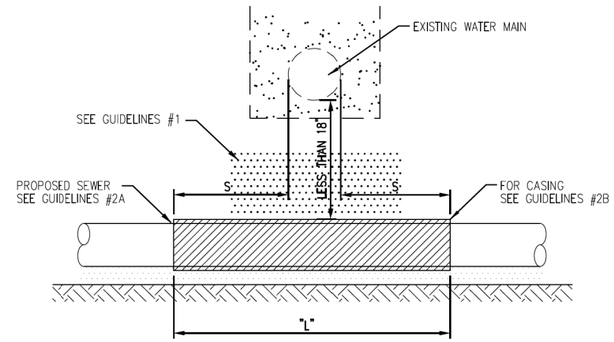

GUIDELINES

1. OMIT SELECT GRANULAR EMBEDMENT AND GRANULAR BACKFILL TO ONE (1) FOOT OVER TOP OF SEWER AND USE SELECT EXCAVATED MATERIAL (CLASS IV) AND COMPACT FOR "S" FEET ON EACH SIDE OF WATER MAIN.
2. A) CONSTRUCT "L" FEET OF PROPOSED SEWER OF WATER MAIN MATERIAL AND PRESSURE TEST, OR;

   B) USE "L" FEET OF WATER MAIN MATERIAL FOR CASING OF PROPOSED SEWER AND SEAL ENDS OF CASING.
3. PROVIDE ADEQUATE SUPPORT FOR EXISTING WATER MAIN TO PREVENT DAMAGE DUE TO SETTLEMENT OF SEWER TRENCH

NOTE: "S" THE LENGTH NECESSARY TO PROVIDE 10 FEET OF SEPARATION AS MEASURED PERPENDICULAR TO THE EXISTING WATER MAIN

*BASED ON STANDARD SPECIFICATIONS FOR WATER AND SEWER MAIN CONSTRUCTION IN ILLINOIS.

PROPOSED WATER MAIN ABOVE EXISTING SEWER LINE WITH LESS THAN 18" VERTICAL SEPARATION

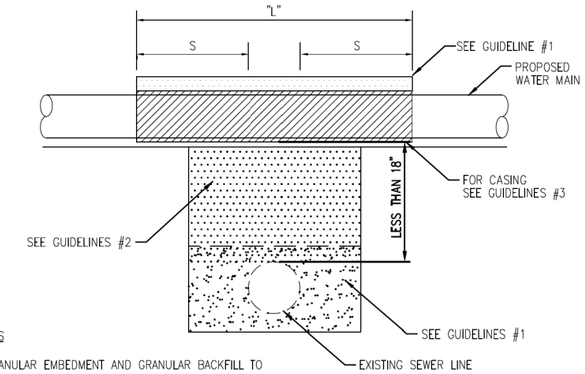

GUIDELINES

1. OMIT SELECT GRANULAR EMBEDMENT AND GRANULAR BACKFILL TO ONE (1) FOOT OVER TOP OF WATER MAIN AND USE SELECT EXCAVATED MATERIAL (CLASS IV) AND COMPACT THE LENGTH OF "L".
2. IF SELECT GRANULAR BACKFILL EXISTS, REMOVE WITHIN WIDTH OF EXISTING SEWER LINE TRENCH AND REPLACE WITH SELECT EXCAVATED MATERIAL (CLASS IV) AND COMPACT.
3. USE "L" FEET OF WATER MAIN MATERIAL FOR CASING OF PROPOSED WATER MAIN AND SEAL ENDS OF CASING.
4. POINT LOADS SHALL NOT BE ALLOWED BETWEEN WATER MAIN CASING AND SEWER

NOTE: "S" THE LENGTH NECESSARY TO PROVIDE 10 FEET OF SEPARATION AS MEASURED PERPENDICULAR TO THE EXISTING SEWER LINE.

*BASED ON STANDARD SPECIFICATIONS FOR WATER AND SEWER MAIN CONSTRUCTION IN ILLINOIS.

PER IEPA, WHEN **PROPOSED** SEWER (CR WATER) IS LOCATED 10 FEET OR MORE FROM EXISTING WATER (OR SEWER), NO SPECIAL CONSTRUCTION REQUIRED

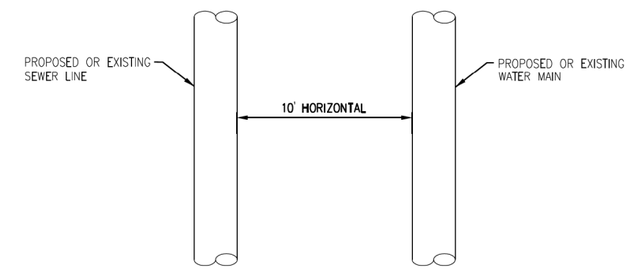

PLAN VIEW

PER IEPA, WHEN **PROPOSED** SEWER (OR WATER) IS LOCATED **LESS THAN 10 FEET** FROM EXISTING WATER (OR SEWER), DETAILS BELOW SHALL APPLY

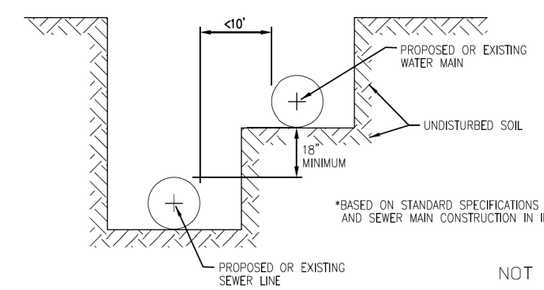

*BASED ON STANDARD SPECIFICATIONS FOR WATER AND SEWER MAIN CONSTRUCTION IN ILLINOIS.

NOT TO SCALE

PROPOSED SEWER LINE BELOW EXISTING WATER MAIN WITH 18" MINIMUM VERTICAL SEPARATION

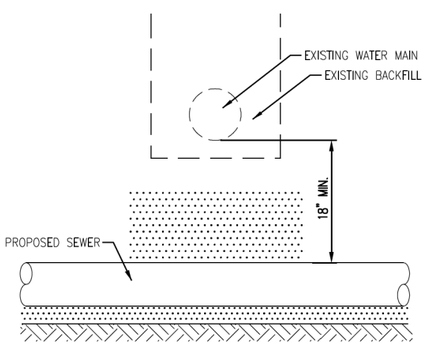

GUIDELINES

1. PROVIDE ADEQUATE SUPPORT FOR EXISTING WATER MAIN TO PREVENT DAMAGE DUE TO SETTLEMENT OF SEWER TRENCH.

*BASED ON STANDARD SPECIFICATIONS FOR WATER AND SEWER MAIN CONSTRUCTION IN ILLINOIS.

PLACEMENT OF WATER MAIN BELOW EXISTING OR PROPOSED SEWER LINE WITH LESS THAN 18" MINIMUM VERTICAL SEPARATION. **NOT ALLOWED.**

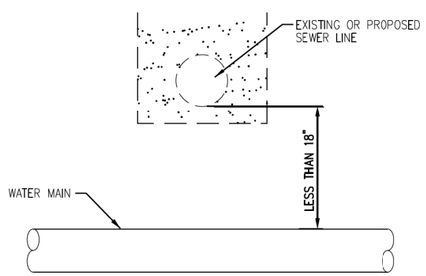

NOT ALLOWED*
MUST MAINTAIN 18" VERTICAL SEPARATION

*BASED ON STANDARD SPECIFICATIONS FOR WATER AND SEWER MAIN CONSTRUCTION IN ILLINOIS.

PROPOSED WATER MAIN BELOW EXISTING SEWER LINE WITH 18" MINIMUM VERTICAL SEPARATION

NOTE: "S" THE LENGTH NECESSARY TO PROVIDE 10 FEET OF SEPARATION AS MEASURED PERPENDICULAR TO THE EXISTING SEWER LINE

*BASED ON STANDARD SPECIFICATIONS FOR WATER AND SEWER MAIN CONSTRUCTION IN ILLINOIS.

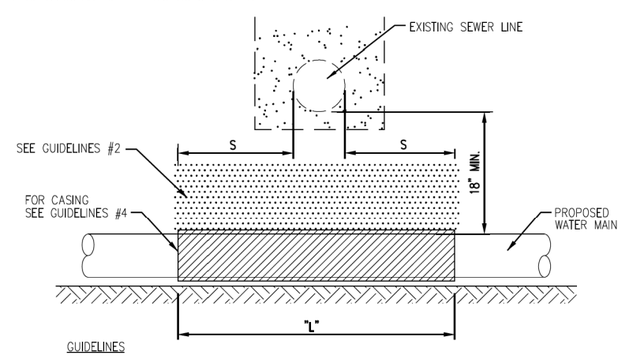

GUIDELINES

1. OMIT SELECT GRANULAR EMBEDMENT AND GRANULAR BACKFILL TO ONE (1) FOOT OVER TOP OF WATER MAIN AND USE SELECT EXCAVATED MATERIAL (CLASS IV) AND COMPACT THE LENGTH OF "L".
2. IF SELECT GRANULAR BACKFILL EXISTS, REMOVE WITHIN WIDTH OF EXISTING SEWER LINE TRENCH AND REPLACE WITH SELECT EXCAVATED MATERIAL (CLASS IV) AND COMPACT.
3. PROVIDE ADEQUATE SUPPORT FOR EXISTING SEWER LINE TO PREVENT DAMAGE DUE TO SETTLEMENT.
4. USE "L" FEET OF WATER MAIN MATERIAL FOR CASING OF PROPOSED WATER MAIN AND SEAL ENDS OF CASING.

TECHNICAL GUIDANCE MANUAL

WATER AND SEWER SEPARATION REQUIREMENTS (PER IEPA)

7/1/15

STD. DWG. NO. 41

PAGE NO. 42

MODEL: Sheet-04 [Sheet]
FILE NAME: c:\bms\kwtech-pw\petro.kravets\d0140573\Construction Details.dgn

USER NAME = pk	DESIGNED -	REVISED -	
	DRAWN -	REVISED -	
	CHECKED -	REVISED -	
PLOT DATE = 12/15/2025	DATE - 12/12/2025	REVISED -	

STATE OF ILLINOIS
DEPARTMENT OF TRANSPORTATION

BRAINTREE DRIVE
CONSTRUCTION DETAILS

SCALE: N.T.S. | SHEET 4 OF 9 SHEETS | STA. | TO STA.

MUN RTE.	SECTION	COUNTY	TOTAL SHEETS	SHEET NO.
4029	23-00146-00-PV	COOK	315	192

CONTRACT NO. 61M26

ILLINOIS | FED. AID PROJECT

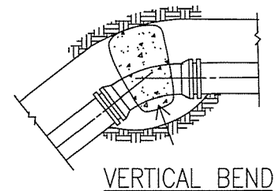

VERTICAL BEND

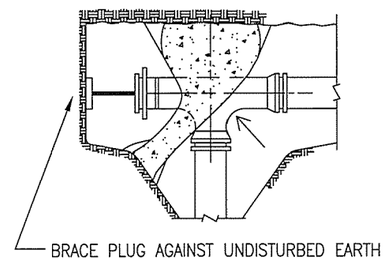

PLUGGED TEE

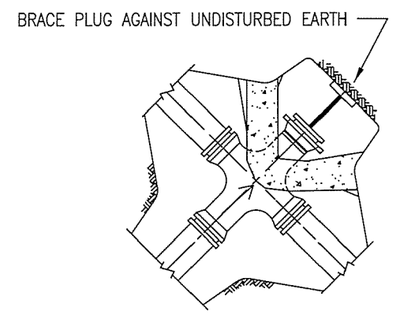

PLUGGED CROSS

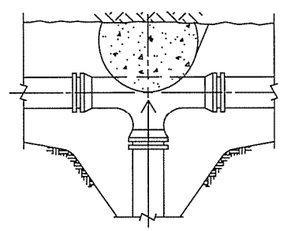

TEE

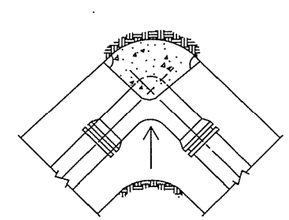

90° ELBOW

NOTE: ALL BLOCKS BEAR AGAINST UNDISTURBED EARTH.
ARROWS INDICATE DIRECTION OF THRUST.
ALL BLOCKS TO BE 3000 P.S.I CONCRETE.
ALL FITTINGS SHOWN IN PLAN EXCEPT VERTICAL BEND.

TYPICAL THRUST BLOCK INSTALLATIONS

STANDARD DRAWING NO.12

MODEL: Sheet-05 [Sheet]
FILE NAME: c:\bms\dvlltech-pw\petro.kravets\d0140573\Construction Details.dgn

USER NAME = pk	DESIGNED -	REVISED -	
	DRAWN -	REVISED -	
	CHECKED -	REVISED -	
PLOT DATE = 12/15/2025	DATE - 12/12/2025	REVISED -	

STATE OF ILLINOIS
DEPARTMENT OF TRANSPORTATION

BRAINTREE DRIVE
CONSTRUCTION DETAILS

SCALE: N.T.S. | SHEET 5 OF 9 SHEETS | STA. | TO STA.

MUN RTE.	SECTION	COUNTY	TOTAL SHEETS	SHEET NO.
4029	23-00146-00-PV	COOK	315	193

CONTRACT NO. 61M26

ILLINOIS | FED. AID PROJECT

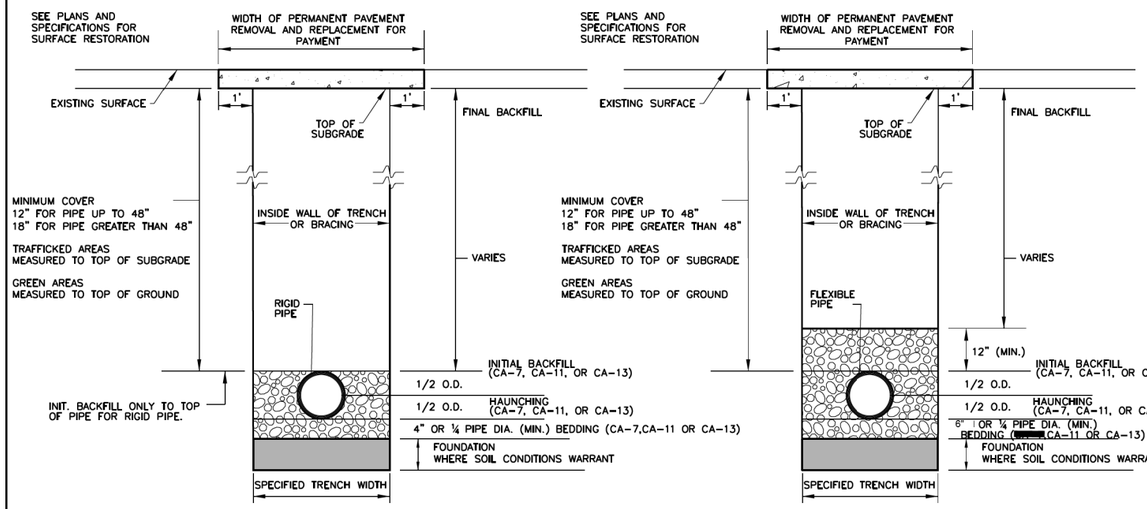

RIGID PIPE INSTALLATION DETAIL

FLEXIBLE PIPE INSTALLATION DETAIL

NOTES:
1. FOR QUALIFIED SEWER CONSTRUCTION ONLY.
2. SHORING, OR EQUIVALENT PROTECTIVE SYSTEM, REQUIRED FOR TRENCHES OF 5' DEPTH OR GREATER, OR AS REQUIRED BY MUNICIPALITY.

NOT TO SCALE

	TECHNICAL GUIDANCE MANUAL	7/1/15
	RIGID AND FLEXIBLE PIPE INSTALLATION DETAIL	STD. DWG. NO. 34
		PAGE NO. 35

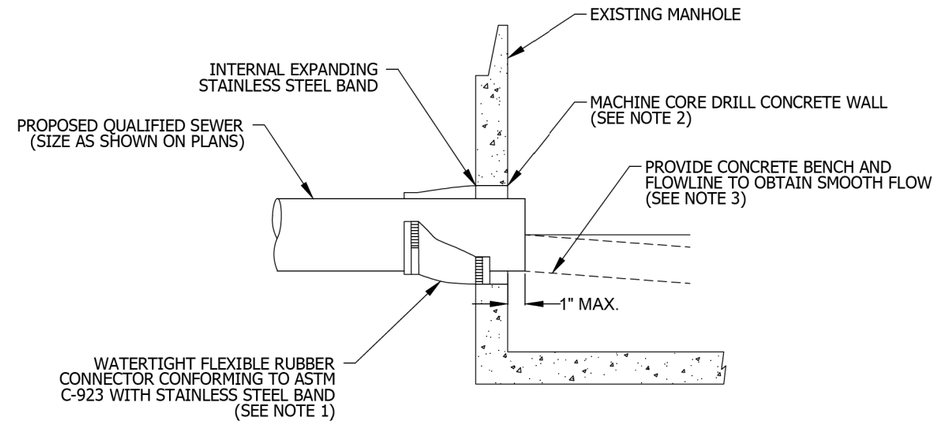

SECTION

NOTES:
1. RESILIENT CONNECTOR COMPLYING WITH ASTM STANDARD C-923 (MOST RECENT EDITION) SHALL BE USED.
2. MACHINE CORE/DRILL CIRCULAR OPENING IN STRUCTURE WALL. OPENING DIAMETER TO FIT THE REQUIRED RESILIENT CONNECTOR PER MANUFACTURER'S RECOMMENDATION.
3. CUT, SHAPE, AND SLOPE NEW INVERT CHANNEL IN THE EXISTING CONCRETE BENCH FOR SMOOTH FLOW.
4. CLEAN EXISTING STRUCTURE AND SEWER PIPE OF ANY DIRT, CONCRETE, OR DEBRIS WHICH MAY ACCUMULATE DURING THE CONSTRUCTION PROCESS.
5. ANY DAMAGE TO THE EXISTING MANHOLE SHALL BE REPAIRED BY THE CONTRACTOR.
6. REINFORCED CONCRETE COLLAR MAY BE SUBSTITUTED FOR PIPE DIAMETERS LARGER THAN 36-INCHES.

NOT TO SCALE

	TECHNICAL GUIDANCE MANUAL	10/02/18
	PIPE TO EXISTING MANHOLE CONNECTION DETAIL	STD. DWG. NO. 42
		PAGE NO. 43

MODEL: Sheet-06 [Sheet]
FILE NAME: c:\bms\civltech-pw\petro.kravets\d0140573\Construction Details.dgn

USER NAME = pk	DESIGNED -	REVISED -	STATE OF ILLINOIS DEPARTMENT OF TRANSPORTATION
	DRAWN -	REVISED -	
	CHECKED -	REVISED -	
PLOT DATE = 12/15/2025	DATE - 12/12/2025	REVISED -	

BRAINTREE DRIVE
CONSTRUCTION DETAILS

SCALE: N.T.S. | SHEET 6 OF 9 SHEETS | STA. | TO STA.

MUN RTE.	SECTION	COUNTY	TOTAL SHEETS	SHEET NO.
4029	23-00146-00-PV	COOK	315	194

CONTRACT NO. 61M26

ILLINOIS | FED. AID PROJECT

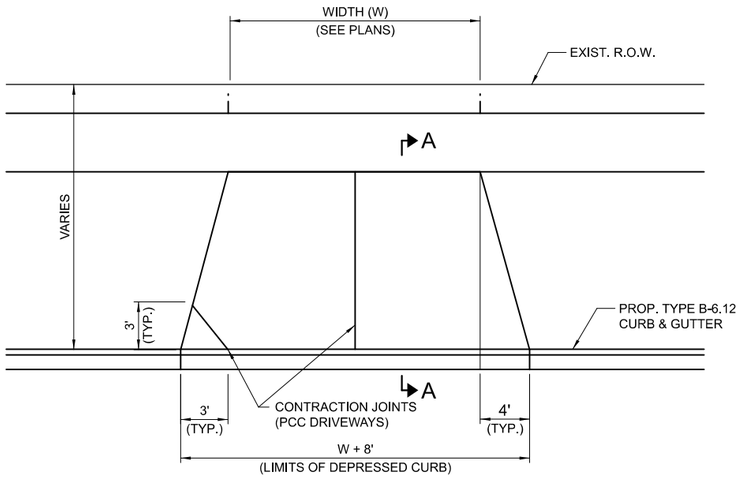

STRAIGHT TAPER PLAN VIEW

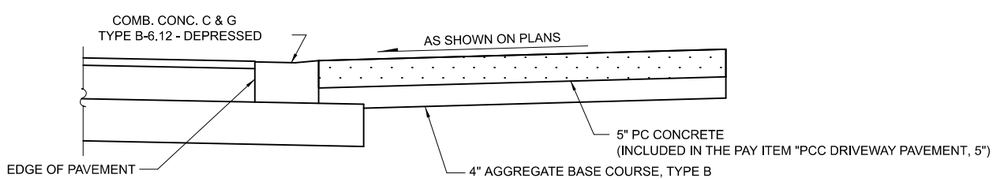

SECTION A-A

PCC RESIDENTIAL DRIVEWAY DETAIL

NOT TO SCALE

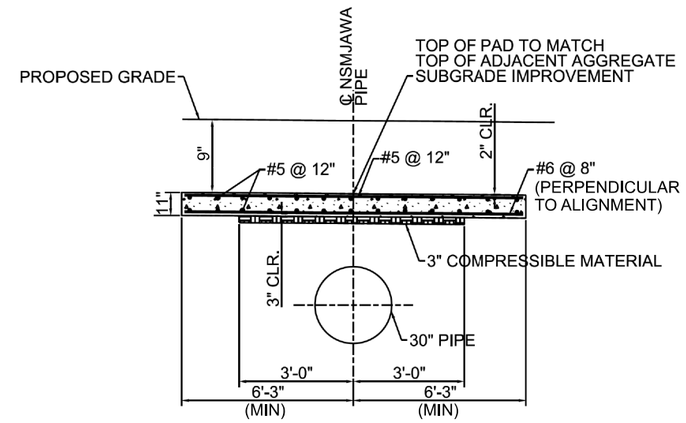

PIPE PROTECTION SLAB DETAIL

NOT TO SCALE

NOTES:

1. MATERIALS:
   F_c'= 3,500 PSI
   REINFORCEMENT BARS SHALL BE GRADE 60 BARS IN ACCORDANCE WITH IDOT STANDARD SPECIFICATIONS FOR ROAD AND BRIDGE CONSTRUCTION.
2. PLACE SLAB IN LIEU OF AGGREGATE SUBGRADE IN PROPOSED PAVEMENT CROSS SECTION. SLAB SHALL BE CURED FOR 7 DAYS IN ACCORDANCE WITH REQUIREMENTS FOR SUBSTRUCTURE IN IDOT STANDARD SPECIFICATIONS FOR ROAD AND BRIDGE CONSTRUCTION PRIOR TO SUBSEQUENT PAVEMENT PLACEMENT.
3. PLACE SLAB AS SHOWN ON THE PLANS.
4. IN AREAS WHERE THE PROPOSED PAVEMENT IS CONSTRUCTED OVER THE EXISTING NSMJAWA WATER MAIN, AND NO STRUCTURAL PROTECTION SLAB IS INSTALLED, CONSTRUCTION LOADS OVER THE EXISTING WATER MAIN SHALL NOT BE GREATER THAN HS-20 LOADINGS.

PROTECTION SLAB FOR
NSMJAWA PIPE

PAID FOR AS "UTILITY PROTECTION PAD"

MODEL: Sheet-07 [Sheet]
FILE NAME: c:\bms\ailtech-pw\petro.kravets\d0140573\Construction Details.dgn

USER NAME = pk	DESIGNED -	REVISED -	
	DRAWN -	REVISED -	
	CHECKED -	REVISED -	
PLOT DATE = 12/15/2025	DATE - 12/12/2025	REVISED -	

STATE OF ILLINOIS
DEPARTMENT OF TRANSPORTATION

BRAINTREE DRIVE
CONSTRUCTION DETAILS

SCALE: N.T.S. | SHEET 7 OF 9 SHEETS | STA. | TO STA.

MUNI. RTE.	SECTION	COUNTY	TOTAL SHEETS	SHEET NO.
4029	23-00146-00-PV	COOK	315	195

CONTRACT NO. 61M26

ILLINOIS | FED. AID PROJECT

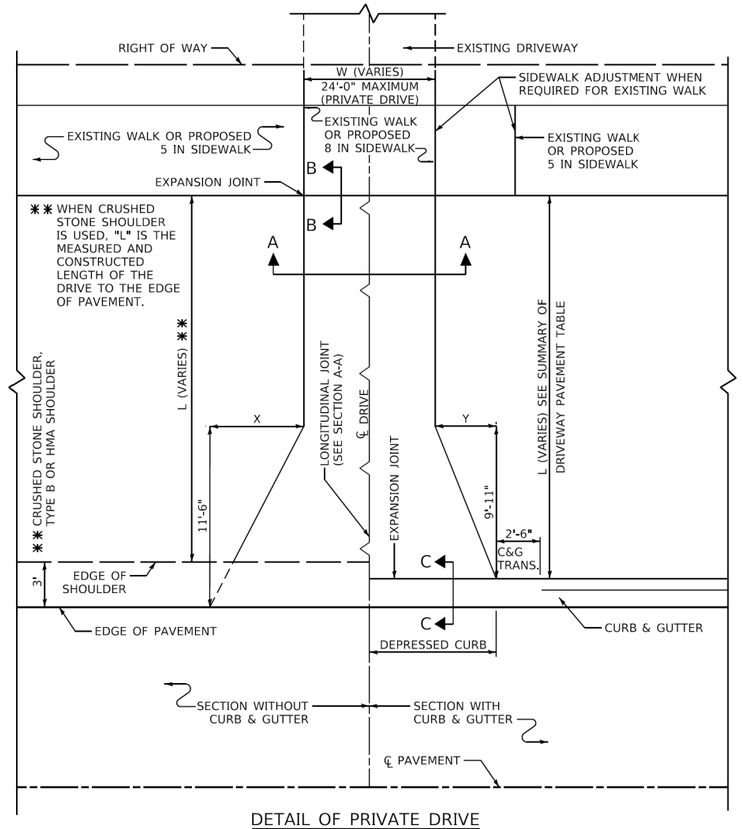

DETAIL OF PRIVATE DRIVE

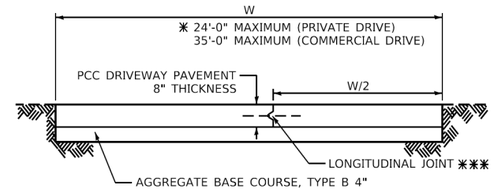

✱✱✱ WHEN 'W' IS GREATER THAN 16'-0", A LONGITUDINAL CONSTRUCTION JOINT AS DETAILED ON IDOT HIGHWAY STANDARD 420001 SHALL BE USED AS SHOWN.

SECTION A-A PCC DRIVEWAY

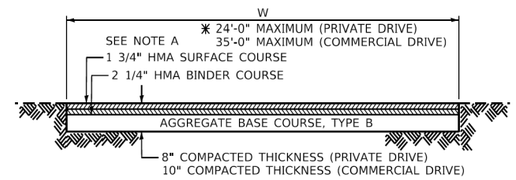

SECTION A-A HMA DRIVEWAY

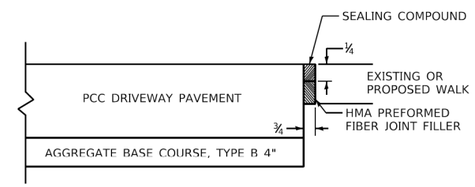

SECTION B-B

THE EXPANSION JOINT SHALL BE INCLUDED IN THE CONTRACT UNIT PRICE PER SQUARE FOOT FOR PORTLAND CEMENT CONCRETE SIDEWALK OR PER SQUARE YARD FOR PORTLAND CEMENT CONCRETE DRIVEWAY.

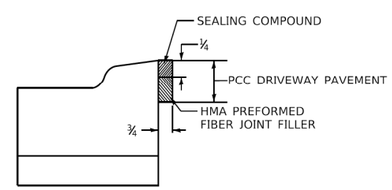

SECTION C-C

CHART

FOR DRIVEWAY WIDTH - W ✱ (FT)	X (FT)	Y (FT)
12	6.0	4.2
14 - 16	4.9	3.4
17 - 18	4.0	2.9
OVER 18	3.2	2.3

✱ PRIVATE DRIVES: 12'-0" MINIMUM, 24'-0" MAXIMUM

COMMERCIAL DRIVES: 12'-0" MINIMUM, 24'-0" MAXIMUM FOR 1-WAY OPERATION
24'-0" MINIMUM, 35'-0" MAXIMUM FOR 2-WAY OPERATION

MAXIMUM DRIVEWAY SLOPE

PROPERTY	URBAN	RURAL	RURAL (PERMIT WORK ONLY)
COMMERCIAL	6%	6%	10%
NON-COMMERCIAL	8%	8%	12%

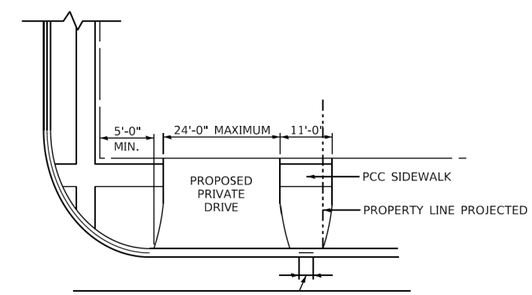

DESIRABLE DISTANCE OF FULL CURB HEIGHT BETWEEN ADJACENT DRIVES SHALL BE 6'-0".
IT IS DESIRABLE THAT THE DRIVE RETURNS TERMINATE WITHIN THE PROPERTY LINE AS PROJECTED.

LIMITATIONS UPON PRIVATE DRIVES

AT STREET INTERSECTIONS
MAXIMUM WIDTH & MINIMUM DISTANCE
BETWEEN DRIVES

SUMMARY OF DRIVEWAY PAVEMENT

STATION	"L"	"W"	SQ YD PCC DRIVEWAY PAVEMENT	SQ YD HMA DRIVEWAY PAVEMENT		STATION	"L"	"W"	SQ YD PCC DRIVEWAY PAVEMENT	SQ YD HMA DRIVEWAY PAVEMENT

GUIDE FOR DRIVEWAY LENGTH

1. MEET EXISTING WALK (USE JOINT FOR PCC PAVEMENT SECTION B-B)
2. IF THERE IS NO EXISTING OR PROPOSED WALK, EXTEND TO RIGHT OF WAY LINE
3. IF THERE IS NO EXISTING WALK BUT A PROPOSED WALK IS REQUIRED, CONSTRUCT 8 INCH WALK FOR FULL DRIVEWAY WIDTH (SECTION B-B)
4. IF THERE IS A WALK ADJUSTMENT, CONSTRUCT 8" WALK FOR FULL DRIVEWAY WIDTH AND 5" WALK BEYOND.

QUANTITIES SHALL BE COMPUTED ON THE BASIS OF THE DRIVES EXTENDING TO SIDEWALK OR RIGHT OF WAY LINE AS SHOWN ON THE PLANS. HOWEVER, IT SHALL BE THE RESPONSIBILITY OF THE FIELD ENGINEER TO DETERMINE THE ACTUAL LIMITS OF EACH INSTANCE.

NOTE A

FOR HMA DRIVEWAYS: AS AN ALTERNATE TO THE 1 3/4" HOT-MIX ASPHALT SURFACE COURSE, MIX "D", IL-12.5 OR 9.5, N70, AND THE 2 1/4" HOT-MIX ASPHALT CONCRETE BINDER COURSE, IL-19, N70 4" HOT-MIX ASPHALT SURFACE COURSE, MIX "D", IL-12.5 OR 9.5 N70 MAY BE USED. IN THE EVENT THE CONTRACTOR ELECTS TO USE THIS ALTERNATE, THE ADDITIONAL 2 1/4" OF HOT-MIX ASPHALT SURFACE COURSE, MIX "D", IL-12.5 OR 9.5 N70 SHALL BE PAID FOR AT THE CONTRACT UNIT PRICE FOR HOT-MIX ASPHALT BINDER COURSE, IL-19, N70.

GENERAL NOTE:

ALL DIMENSIONS ARE IN INCHES UNLESS OTHERWISE SHOWN.

MUNICIPALITY, IL MUNICIPALITY, IL NAME TOWNSHIP	COUNTY HIGHWAY: XXX FISCAL YEAR: XXXX SECTION: XX-XXXXX-XX-XX	COUNTY OF COOK DEPARTMENT OF TRANSPORTATION AND HIGHWAYS	COMPUTED: XXX DRAWN: XXX CHECKED: XXX	REVISIONS / GENERAL — DATE 1/1/20	PRIVATE AND COMMERCIAL DRIVE DETAIL COOK COUNTY DEPARTMENT OF TRANSPORTATION AND HIGHWAYS STANDARD C-002	C-XXX NOT TO SCALE SHEET X

CCDOTH DRIVEWAY DETAIL (APPLICABLE ONLY IN WISE ROAD RIGHT-OF-WAY)

MODEL: Sheet-08 [Sheet]
FILE NAME: c:\bms\dvlltech-pw\petro.kravets\d0140573\Construction Details.dgn

USER NAME = pk	DESIGNED -	REVISED -	STATE OF ILLINOIS DEPARTMENT OF TRANSPORTATION
	DRAWN -	REVISED -	
	CHECKED -	REVISED -	
PLOT DATE = 12/15/2025	DATE - 12/12/2025	REVISED -	

BRAINTREE DRIVE
CONSTRUCTION DETAILS

SCALE: SHEET 8 OF 9 SHEETS STA. TO STA.

MUNI RTE.	SECTION	COUNTY	TOTAL SHEETS	SHEET NO.
4029	23-00146-00-PV	COOK	315	196

CONTRACT NO. 61M26

ILLINOIS FED. AID PROJECT

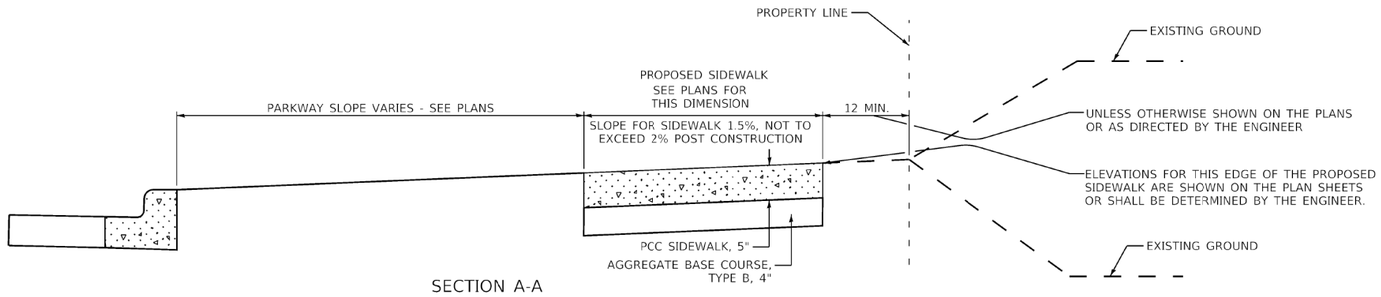

SECTION A-A

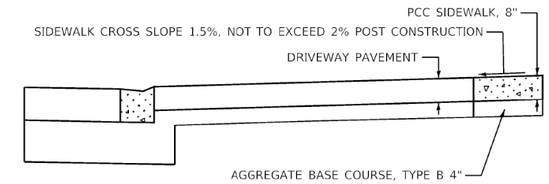

SECTION B-B

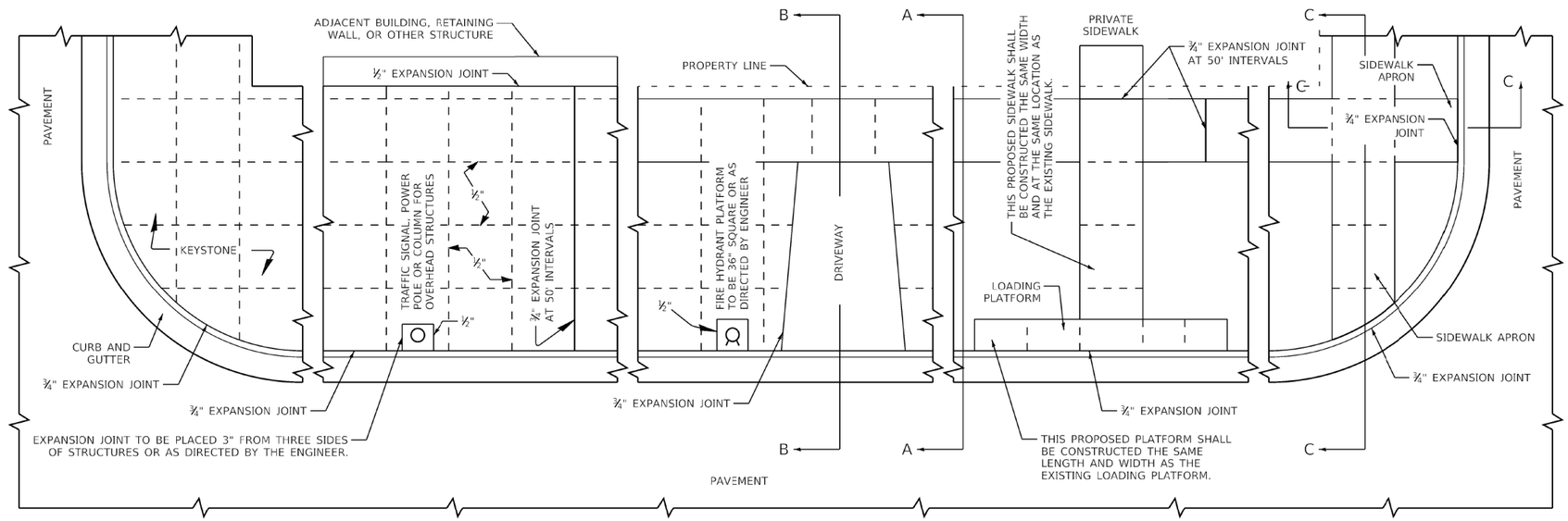

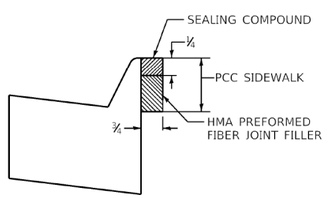

EXPANSION JOINT DETAIL

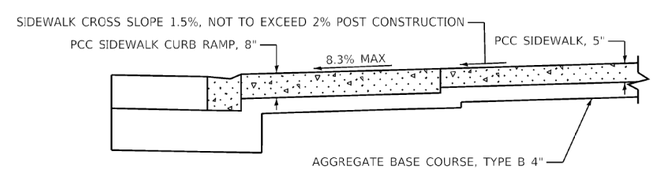

SECTION C-C

GENERAL NOTES:

ALL EXPANSION JOINTS SHALL CONFORM TO THE REQUIREMENTS OF SECTION 424.07 OF THE STANDARD SPECIFICATIONS FOR ROAD AND BRIDGE CONSTRUCTION AND SHALL BE INCLUDED IN THE CONTRACT UNIT PRICE PER SQUARE FOOT FOR PORTLAND CEMENT CONCRETE SIDEWALK OF THE THICKNESS SPECIFIED.

ALL DIMENSIONS ARE IN INCHES UNLESS OTHERWISE SHOWN.

MUNICIPALITY, IL MUNICIPALITY, IL NAME TOWNSHIP	COUNTY HIGHWAY: XXX FISCAL YEAR: XXXX SECTION: XX-XXXXX-XX-XX	COUNTY OF COOK DEPARTMENT OF TRANSPORTATION AND HIGHWAYS	COMPUTED: XXX DRAWN: XXX CHECKED: XXX	REVISIONS GENERAL NEW DRAWING SECTION C-C	DATE 1/1/20 11/10/22	PORTLAND CEMENT CONCRETE SIDEWALK CONSTRUCTION DETAIL COOK COUNTY DEPARTMENT OF TRANSPORTATION AND HIGHWAYS STANDARD C-003	C-XXX NOT TO SCALE SHEET X

CCDOTH SIDEWALK DETAIL (APPLICABLE ONLY IN WISE ROAD RIGHT-OF-WAY)

USER NAME = pk	DESIGNED -	REVISED -	STATE OF ILLINOIS DEPARTMENT OF TRANSPORTATION	BRAINTREE DRIVE CONSTRUCTION DETAILS	MUNI. RTE.	SECTION	COUNTY	TOTAL SHEETS	SHEET NO.
	DRAWN -	REVISED -			4029	23-00146-00-PV	COOK	315	197
	CHECKED -	REVISED -					CONTRACT NO. 61M26		
PLOT DATE = 12/15/2025	DATE - 12/12/2025	REVISED -		SCALE: SHEET 9 OF 9 SHEETS STA. TO STA.		ILLINOIS	FED. AID PROJECT		

MODEL: Sheet-09 [Sheet]
FILE NAME: c:\bms\civiltech-pw\petro.kravets\0140573\Construction Details.dgn

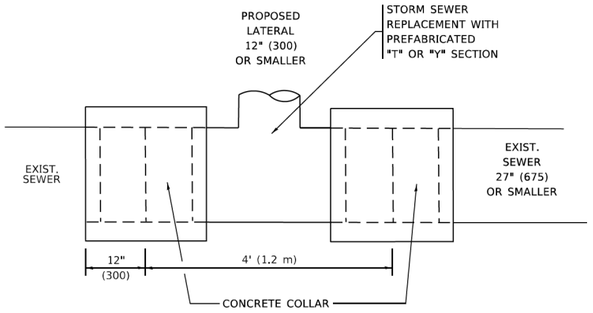

DETAIL "A"

LATERAL CONNECTION TO EXISTING SEWER
OF 27" (675) OR SMALLER

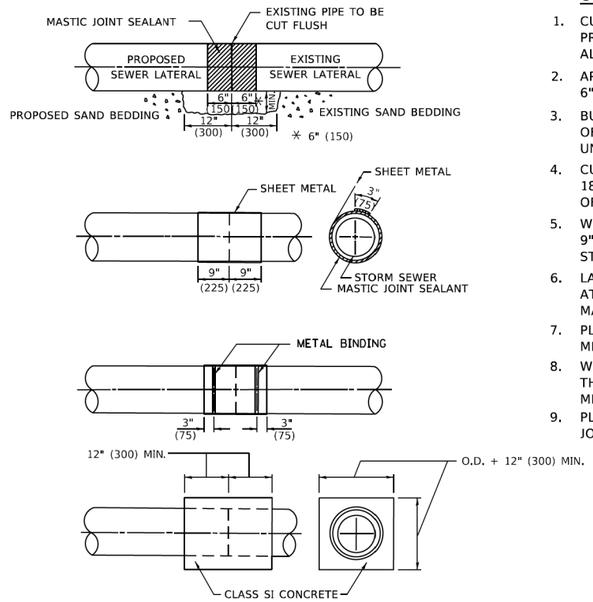

DETAIL "B"

CLASS SI CONCRETE COLLAR

CONSTRUCTION SEQUENCE

1. CUT THE EXISTING END OF THE PIPE SO AS TO PRESENT A FLUSH BUTT JOINT. BRUSH AND CLEAN ALL PIPES.
2. APPLY THE MASTIC JOINT SEALANT TO THE FIRST 6" (150) OF EACH PIPE.
3. BUTT THE PIPES TOGETHER LEAVING A MINIMUM OF 12' x 6' (300 x 150) DEEP EXCAVATION UNDER AND AROUND EACH PIPE END.
4. CUT A PIECE OF SHEET METAL GAGE NO. 19 1.1 (0.0418) 18" (450) WIDE BY THE OUTSIDE CIRCUMFERANCE OF THE PIPE PLUS 3" (75) LONG.
5. WRAP THE SHEET METAL AROUND THE PIPES, 9" (225) ON EACH SIDE OF THE JOINT, STARTING AT THE TOP OF THE PIPE.
6. LAP THE SHEET METAL AT LEAST 3" (75) AT THE TOP OF THE PIPE AND PLACE THE MASTIC JOINT SEALANT BETWEEN THE LAP.
7. PLACE TWO METAL BANDS AROUND THE SHEET METAL AND TIGHTEN.
8. WIPE OFF ANY EXCESS MASTIC JOINT SEALANT THAT OOZES OUT FROM BETWEEN THE SHEET METAL AND THE PIPES.
9. PLACE CLASS SI CONCRETE AROUND THE JOINT.

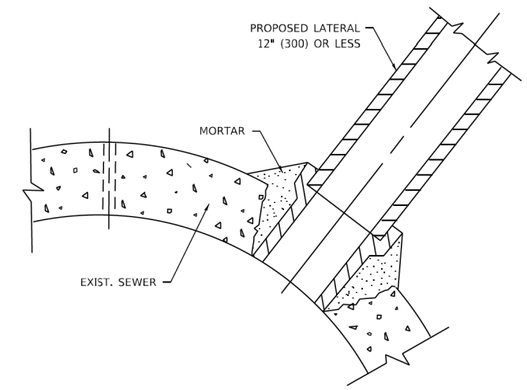

DETAIL "C"

PROPOSED LATERAL
CONNECTION TO EXISTING SEWER
OF 30" (750) OR LARGER

NOTES:

MATERIAL

MATERIAL USED FOR THE TEE OR WYE SECTION SHALL BE COMPATIBLE WITH THE EXISTING STORM SEWER OR THE PROPOSED STORM SEWER.

CONSTRUCTION METHODS

I. THIS WORK SHALL BE CONSTRUCTED IN CONFORMANCE WITH THE APPLICABLE PORTIONS OF SECTION 550 OF THE STANDARD SPECIFICATIONS.

II. CONNECTION TO AN EXISTING STORM SEWER SHALL BE BY EITHER OF THE FOLLOWING METHODS:
A) PROPOSED STORM SEWER CONNECTION TO EXISTING SEWER OF 27" (675) OR SMALLER SEE DETAIL "A" AND "B".
B) PROPOSED STORM SEWER CONNECTION TO EXISTING SEWER OF 30" (750) OR LARGER SEE DETAIL "C".

IF THE EXISTING SEWER PIPE IS CRACKED, BROKEN OR OTHERWISE DAMAGED BY THE CONTRACTOR IN MAKING THE CIRCULAR OPENING, THE CONTRACTOR SHALL REPLACE THAT SECTION OF PIPE WITH PIPE EQUAL AND SIMILAR IN ALL RESPECTS TO THE PIPE IN THE EXISTING SEWER, IN A CAREFUL WORKMANLIKE MANNER, WITHOUT EXTRA COMPENSATION.

GENERAL

1. CARE MUST BE TAKEN TO PREVENT DEBRIS FROM ENTERING THE SEWER. ALL DEBRIS WHICH ENTERS THE SEWER MUST BE REMOVED. THE SEWER MUST BE LEFT CLEAN AND UNOBSTRUCTED UPON COMPLETION OF THE CONTRACT.
2. CARE MUST BE TAKEN TO PREVENT ANY PART OF THE NEW PIPE CONNECTION FROM PROJECTING INTO THE EXISTING SEWER.

BASIS OF PAYMENT

1. TEE OR WYE CONNECTIONS SHALL BE PAID FOR AT THE CONTRACT UNIT PRICE EACH FOR STORM SEWER TEE OR WYE OF THE TYPE AND SIZE SPECIFIED IN THE PLANS. THIS PRICE SHALL INCLUDE ALL EXCAVATION OF THE TRENCH, REMOVAL OF THE EXISTING STORM SEWER, FURNISHING AND INSTALLING THE SPECIFIED TEE OR WYE SECTION, FURNISHING AND INSTALLING THE REQUIRED CONCRETE COLLAR, AND ALL OTHER MATERIAL NECESSARY TO COMPLETE THIS WORK AS SHOWN AND SPECIFIED.
2. REMOVAL AND REINSTALLATION OF EXISTING STORM SEWER ADJACENT TO THE PROPOSED TEE OR WYE SECTION, FOR THE PURPOSE OF FACILITATING THE INSTALLATION OF THE TEE OR WYE SECTION, WILL NOT BE PAID FOR SEPARATELY BUT SHALL BE INCLUDED IN THE UNIT PRICE BID FOR THE WORK.
3. TRENCH BACKFILL, EXCAVATION IN ROCK AND REMOVAL AND REPLACEMENT OF UNSUITABLE MATERIAL BELOW PLAN BEDDING GRADE WILL BE PAID FOR SEPARATELY.
4. CONCRETE COLLAR FOR CONNECTING A PROPOSED STORM SEWER TO AN EXISTING STORM SEWER WILL NOT BE PAID PAID FOR SEPARATELY BUT SHALL BE INCLUDED IN THE COST OF THE PROPOSED STORM SEWER.

* ALL DIMENSIONS ARE IN INCHES (MILLIMETERS) UNLESS OTHERWISE SHOWN.

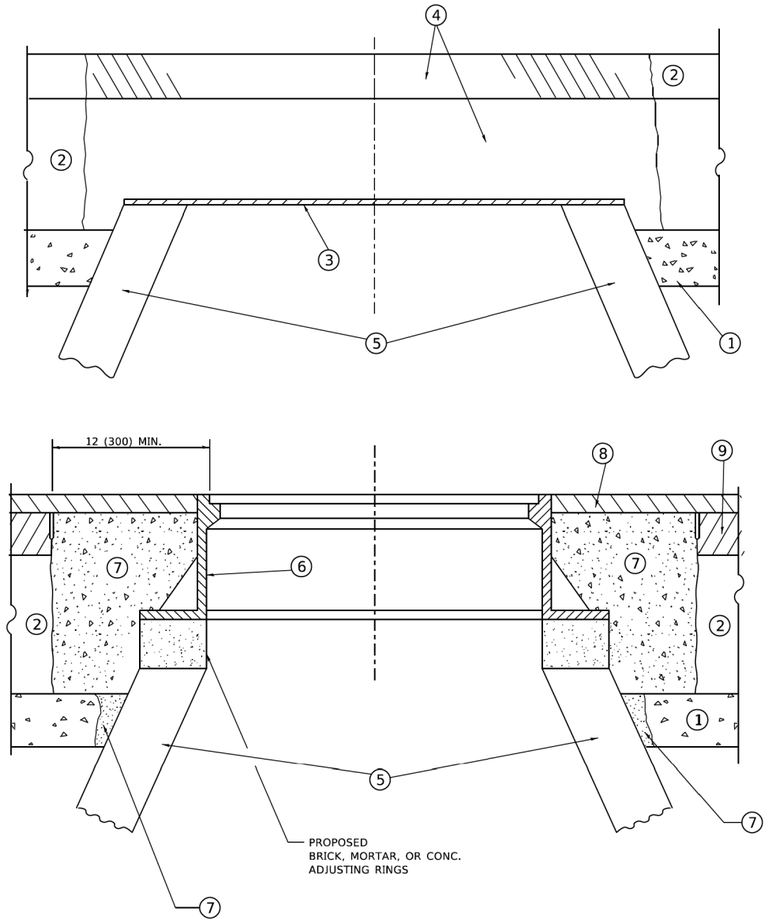

DETAILS FOR FRAMES AND LIDS ADJUSTMENT WITH MILLING

NOTES

1. EXISTING BROKEN FRAMES AND LIDS SHALL BE REMOVED AND DISPOSED OF BY THE CONTRACTOR AND SHALL BE REPLACED AS DIRECTED BY THE ENGINEER. REPLACEMENT FRAMES AND LIDS WILL BE PAID FOR IN ACCORDANCE WITH ARTICLE 109.04 OF THE STANDARD SPECIFICATIONS UNLESS A SEPARATE PAY ITEM HAS BEEN PROVIDED.

2. IF THE EXISTING LIDS ARE OPEN, THE FRAME WILL BE ADJUSTED TO THE ELEVATION OF THE MILLED PAVEMENT SURFACE PRIOR TO THE MILLING OPERATION. THE FRAME WILL NOT BE REMOVED AND COVERED BY THE METAL PLATE.

3. CITY OF CHICAGO CASTINGS ARE THE PROPERTY OF THE CITY AND THE CONTRACTOR SHALL NOTIFY THE CITY FOR REMOVAL AND DISPOSITION OF THE CASTINGS.

4. THE METAL PLATE USED TO COVER THE STRUCTURE SHALL REMAIN THE PROPERTY OF THE CONTRACTOR.

5. THE CONTRACTOR SHALL REMOVE ALL TRAFFIC CONTROL DEVICES BY THE END OF EACH WORK SHIFT.

CONSTRUCTION PROCEDURES

STAGE 1 (BEFORE PAVEMENT MILLING)

A) REMOVE A MINIMUM OF 12 (300) OF THE PAVEMENT FROM AROUND THE STRUCTURE.

B) REMOVE THE EXISTING FRAME AND LID FROM THE STRUCTURE.

C) COVER THE STRUCTURE OPENING WITH A 36 (900) DIAMETER METAL PLATE.

D) BACKFILL WITH CRUSHED STONE AND HMA SURFACE MIX APPROVED BY THE ENGINEER. (MIN. 3 (80) HMA TO REMAIN AFTER MILLING).

STAGE 2 (AFTER PAVEMENT MILLING)

A) REMOVE THE HMA SURFACE MIX AND CRUSHED STONE.

B) INSTALL THE FRAME AND LID; ADJUST THE FRAME TO ITS FINAL SURFACE ELEVATION.

C) THE SURROUNDING SPACE SHALL BE FILLED WITH CLASS PP-2* CONCRETE TO THE ELEVATION OF THE SURFACE OF THE EXISTING BASE COURSE OR THE BINDER COURSE.

*UNLESS OTHERWISE SPECIFIED IN THE PLANS.

THE PROCEDURE EXPLAINED ABOVE SHALL CONFORM TO THE APPLICABLE PORTIONS OF SECTIONS 353, 406, 602, AND 603 OF THE STANDARD SPECIFICATIONS EXCEPT THAT "THE CONTRACTOR SHALL ADJUST THE STRUCTURES TO THE FINISHED PAVEMENT ELEVATION NO MORE THAN 5 CALENDAR DAYS PRIOR TO PLACEMENT OF THE FINAL LIFT OF SURFACE UNLESS APPROVED BY THE ENGINEER."

LEGEND

1. SUB-BASE GRANULAR MATERIAL
2. EXISTING PAVEMENT
3. 36 (900) DIAMETER METAL PLATE
4. PROPOSED CRUSHED STONE AND HMA SURFACE MIX
5. EXISTING STRUCTURE
6. FRAME AND LID (SEE NOTES)
7. CLASS PP-2* CONCRETE
8. PROPOSED HMA SURFACE COURSE
9. PROPOSED HMA BINDER COURSE

LOCATION OF STRUCTURES

THE CONTRACTOR WILL BE REQUIRED TO KEEP A RECORD OF THE LOCATIONS OF THE BURIED STRUCTURES ACCORDING TO THE STATION AND DISTANCE LEFT OR RIGHT OF THE CENTERLINE OF PAVEMENT. UPON COMPLETION OF THE WORK, THE CONTRACTOR WILL DELIVER THE RECORD TO THE ENGINEER.

BASIS OF PAYMENT

1. REMOVING FRAMES AND LIDS ON DRAINAGE AND UTILITY STRUCTURES IN THE PAVEMENT PRIOR TO MILLING, AND ADJUSTING TO FINAL GRADE PRIOR TO PLACING THE SURFACE COURSE, WILL BE PAID FOR AT THE CONTRACT UNIT PRICE EACH FOR "FRAMES AND LIDS TO BE ADJUSTED (SPECIAL)."

2. THIS WORK WILL NOT BE PAID FOR WHEN DRAINAGE AND UTILITY STRUCTURES ARE SPECIFIED FOR PAYMENT AS STRUCTURE RECONSTRUCTION.

3. NEW FRAMES AND LIDS, WHEN SPECIFIED, WILL BE PAID FOR SEPARATELY.

4. WHEN STRUCTURES ARE TO BE ADJUSTED OR RECONSTRUCTED, THE LOWERING AND RAISING OF THE FRAMES AND LIDS WILL NOT BE PAID FOR SEPARATELY BUT WILL BE INCLUDED IN THE COST OF THE CORRESPONDING PAY ITEM.

ALL DIMENSIONS ARE IN INCHES (MILLIMETERS) UNLESS OTHERWISE SHOWN

MODEL: Default
FILE NAME: W:\dist\cd\22x34\bd08.dgn

USER NAME = Lawrence.DeManche	DESIGNED - R. SHAH	REVISED - R. BORO 03-09-11	STATE OF ILLINOIS DEPARTMENT OF TRANSPORTATION
	DRAWN -	REVISED - R. BORO 12-06-11	
PLOT SCALE = 100.0000 ' / in.	CHECKED -	REVISED - K. SMITH 11-18-22	
PLOT DATE = 9/15/2023	DATE - 10-25-94	REVISED - K. SMITH 09-15-23	

DETAILS FOR FRAMES AND LIDS ADJUSTMENT WITH MILLING

SCALE: NONE | SHEET 1 OF 1 SHEETS | STA. TO STA.

MUN RTE.	SECTION	COUNTY	TOTAL SHEETS	SHEET NO.
4029	23-00146-00-PV	COOK	315	199
BD600-03 (BD-08)		CONTRACT NO.61M26		
		ILLINOIS	FED. AID PROJECT	

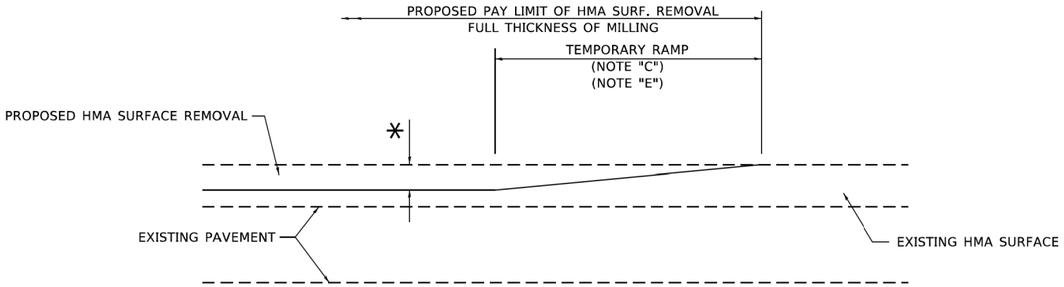

MILLED TEMPORARY RAMP

(FOR BUTT JOINT AND HMA TAPER SEE DETAIL BELOW)

OPTION 1

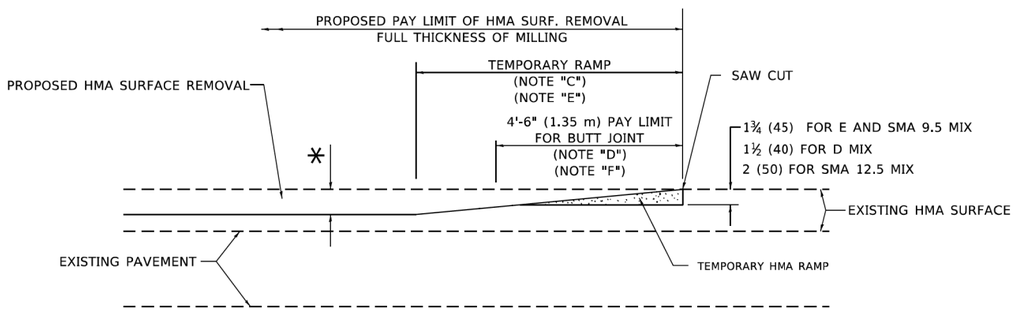

HMA CONSTRUCTED TEMPORARY RAMP

(FOR BUTT JOINT AND HMA TAPER SEE DETAIL BELOW)

OPTION 2

TYPICAL TEMPORARY RAMP

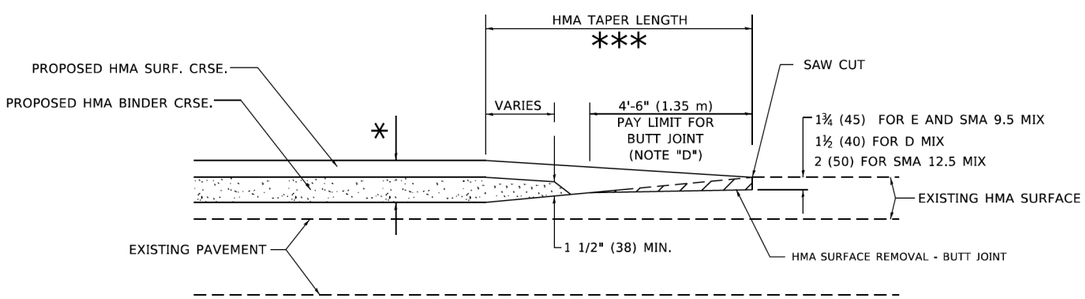

BUTT JOINT AND HMA TAPER

TYPICAL BUTT JOINT AND HMA TAPER FOR MILLING AND RESURFACING

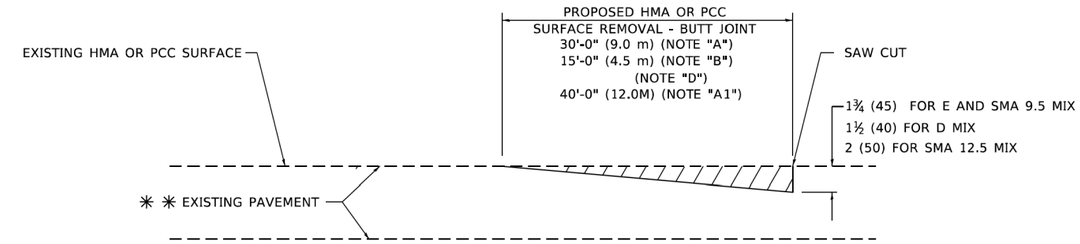

BUTT JOINT DETAIL

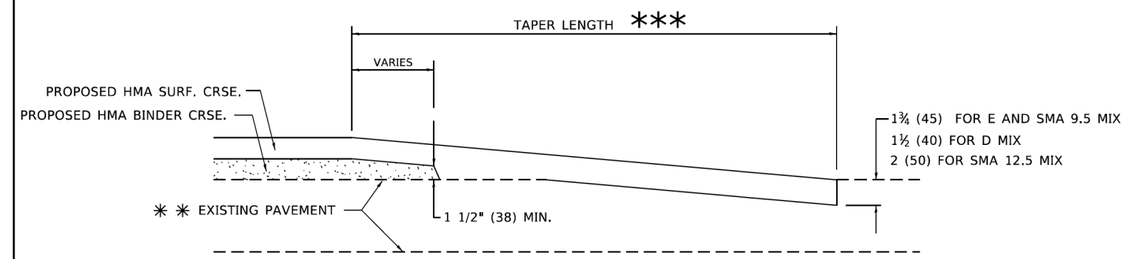

HMA TAPER DETAIL

TYPICAL BUTT JOINT AND HMA TAPER FOR RESURFACING ONLY

** PC CONCRETE, HMA OR HMA RESURFACED PAVEMENT.

GENERAL NOTES

A. MAINLINE ARTERIAL ROADWAYS AND MAJOR SIDE ROADS.

A1. INTERSTATES

B. MINOR SIDE ROADS.

C. THE TEMP. RAMP SHALL BE CONSTRUCTED IMMEDIATELY UPON REMOVAL OF THE EXISTING HMA SURFACE.

D. THE BUTT JOINT SHALL BE CONSTRUCTED IMMEDIATELY PRIOR TO PLACING THE PROPOSED HMA COURSES.

E. TAPER THE TEMP. RAMP AT A RATE OF 3' - 4" (1.02m) PER 1 INCH (25 mm) OF MILLING THICKNESS.

* SEE TYPICAL SECTIONS FOR MILLING THICKNESS.

F. SEE ARTICLE 406.08 AND 406.14 OF THE STANDARD SPECIFICATIONS FOR "HMA AND/OR PCC SURFACE REMOVAL, BUTT JOINT".

*** 20'-0" (6.1 m) PER 1 (25) RESURFACING (NOTE "A")
10'-0" (3.0 m) PER 1 (25) RESURFACING (NOTE "B")

BASIS OF PAYMENT

1. THE BUTT JOINT WILL BE PAID FOR AT THE CONTRACT UNIT PRICE PER SQUARE YARD (SQUARE METER) FOR "HOT-MIX ASPHALT SURFACE REMOVAL - BUTT JOINT" OR FOR "PORTLAND CEMENT CONCRETE SURFACE REMOVAL- BUTT JOINT".
2. THE TEMPORARY RAMP AND SAW CUT SHALL BE INCLUDED IN THE UNIT COST FOR HMA OR PCC SURFACE REMOVAL-BUTT JOINT.

ALL DIMENSIONS ARE IN INCHES (MILLIMETERS) UNLESS OTHERWISE SHOWN.

MODEL: Default
FILE NAME: pw:\\ildot-pw.bentley.com:PWIDOT\Documents\IDOT Offices\District 1\Projects\DistStd22x34\CADData\CADsheets\bd32.dgn

USER NAME = Lawrence.DeManche	DESIGNED - M. DE YONG	REVISED - A. ABBAS 03-21-97	STATE OF ILLINOIS DEPARTMENT OF TRANSPORTATION	BUTT JOINT AND HMA TAPER DETAILS	
	DRAWN -	REVISED - M. GOMEZ 04-06-01			
PLOT SCALE = 100.0000 ' / in.	CHECKED -	REVISED - R. BORO 01-01-07			
PLOT DATE = 11/18/2022	DATE - 06-13-90	REVISED - K. SMITH 11-18-22		SCALE: NONE	SHEET 1 OF 1 SHEETS STA. TO STA.

MUN RTE.	SECTION	COUNTY	TOTAL SHEETS	SHEET NO.
4029	23-00146-00-PV	COOK	315	200
	BD400-05 BD-32	CONTRACT NO.61M26		
		ILLINOIS	FED. AID PROJECT	