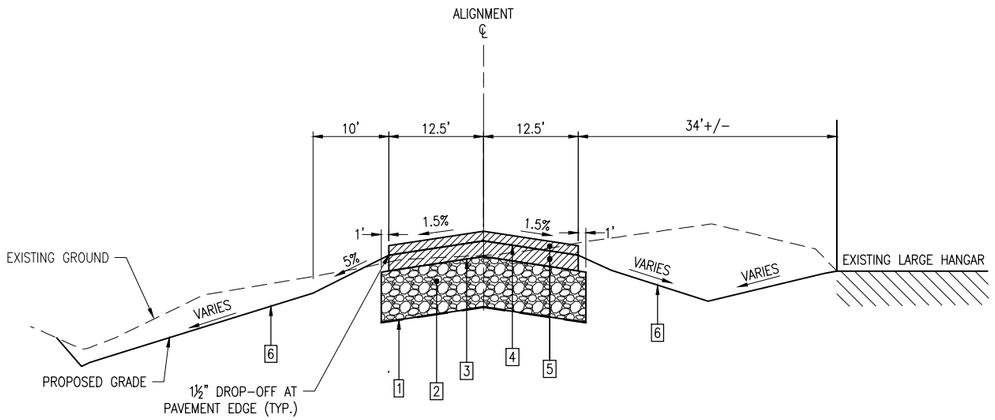

TYPICAL SECTION A-A
NOT TO SCALE

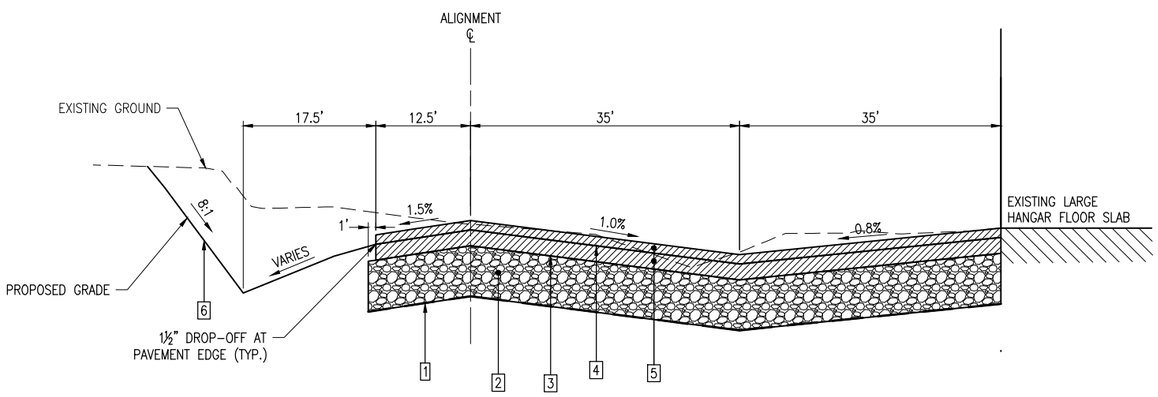

TYPICAL SECTION B-B
NOT TO SCALE

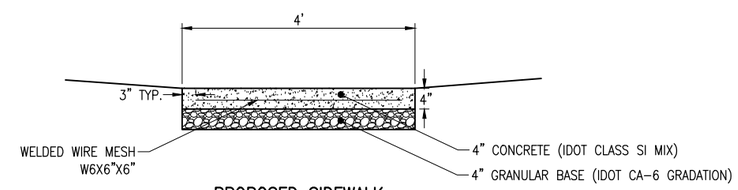

PROPOSED SIDEWALK
NOT TO SCALE

1 AR152540 SOIL STABILIZATION FABRIC

2 AR209510 CRUSHED AGGREGATE BASE COURSE (8" THICKNESS)

3 AR602510 BITUMINOUS PRIME COAT (0.3 GAL/S.Y.)

4 AR603510 BITUMINOUS TACK COAT (0.1 GAL/S.Y.)

5 AR401613 BIT. SURF. CSE. SUPERPAVE, METHOD I (4" THICKNESS PLACED IN 2½" & 1½" LIFTS)

6 AR901510 SEEDING/AR908510 MULCHING

SIDEWALK NOTES

1. SIDEWALK SHALL HAVE A FLAT CROSS SLOPE UNLESS OTHERWISE NOTED ON THE PLAN SHEETS.
2. SIDEWALK SHALL BE CONSTRUCTED AS DETAILED ON THESE SHEETS AND PAID FOR UNDER ITEM AR501600 "PCC SIDEWALK" – PER SQUARE FOOT.
3. EXPANSION JOINTS SHALL BE FORMED AT JUNCTIONS WITH OTHER STRUCTURES AND PAVEMENTS USING A FULL WIDTH AND DEPTH 1/2" THICK PREFORMED EXPANSION JOINT FILLER.
4. THE SURFACE SHALL HAVE A BRUSHED FINISH AND ALL EDGES SHALL BE ROUTED WITH AN EDGING TOOL.
5. CONTRACTION JOINTS SHALL BE CUT OR TOOLED EVERY 4-6', AND THEN SEALED WITH DOW 890 SILICONE JOINT SEALER OR APPROVED EQUAL. ALL JOINTING AND SEALING IS INCIDENTAL TO SIDEWALK PAY ITEMS.

HANSON
Engineering | Planning | Allied Services

Offices Nationwide
www.hanson-inc.com

Hanson Professional Services Inc.
1525 S. 6th Street
Springfield, IL 62703
phone: 217-788-2450
fax: 217-788-2503

Illinois Licensed
Professional Service Corporation
#184-001084

SHELBY COUNTY AIRPORT

P. O. BOX 295
ASSUMPTION, IL. 62510

CONSTRUCT ACCESS TO SNOW REMOVAL EQUIPMENT STORAGE BUILDING

IDA No: 2H0-4341
SBG No: 3-17-SBGP-XX

CONTRACT No: SE005

NO.	DATE	DESCRIPTION		
		DES	DWN	REV

ISSUE: DECEMBER 4, 2014
PROJECT NO: 13A0082
CAD FILE: C-300-TYP.DWG
DESIGN BY: KBS 11/14/2014
DRAWN BY: MLH 11/14/2014
REVIEWED BY: RAW 12/04/2014

SHEET TITLE

TYPICAL SECTION AND DETAILS

DEC 05, 2014 1:31 PM SCHWE01296
I:\13JOBS\13A0082\13A0082D\CAD\AIRPORT\SHEETC-300-TYP.DWG