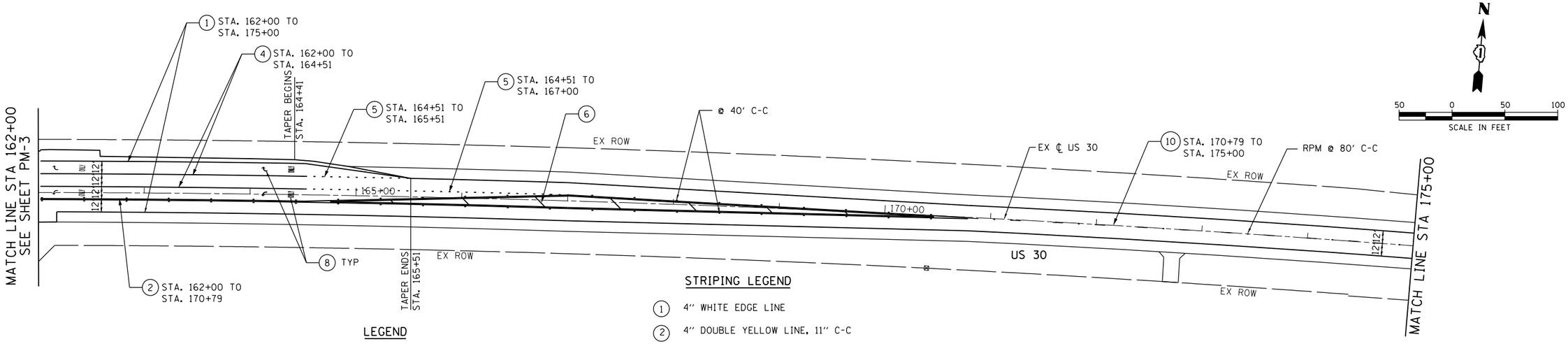

LEGEND

- G GUARDRAIL MARKERS, TYPE A (635006/635011)
- RAISED REFLECTIVE PAVEMENT MARKER. (RPM) (40' C UNLESS OTHERWISE NOTED) TWO -WAY AMBER MARKER (781001)
- RAISED REFLECTIVE PAVEMENT MARKERS (RPM) (40' C UNLESS OTHERWISE NOTED) ONE WAY CRYSTAL (781001)
- EXISTING SIGN
- PROPOSED SIGN (WIDTH X HEIGHT)

STRIPING LEGEND

1. 4'' WHITE EDGE LINE
2. 4'' DOUBLE YELLOW LINE, 11'' C-C
3. 4'' WHITE LINE (10' DASH 30' SKIP)
4. 6'' WHITE TURN LANE LINE
5. 6'' WHITE TURN LINE (2' DASH 6' SKIP)
6. 12'' YELLOW DIAGONAL LINE AT 75' C-C
7. 24'' WHITE STOP LINE
8. LETTERS AND SYMBOLS
9. 6'' WHITE LINE 96'' C-C 45 DEGREE TO PAVEMENT
10. 4'' YELLOW LINE (10' DASH 30' SKIP)
11. 4'' WHITE TURN LINE (3' DASH 9' SKIP)

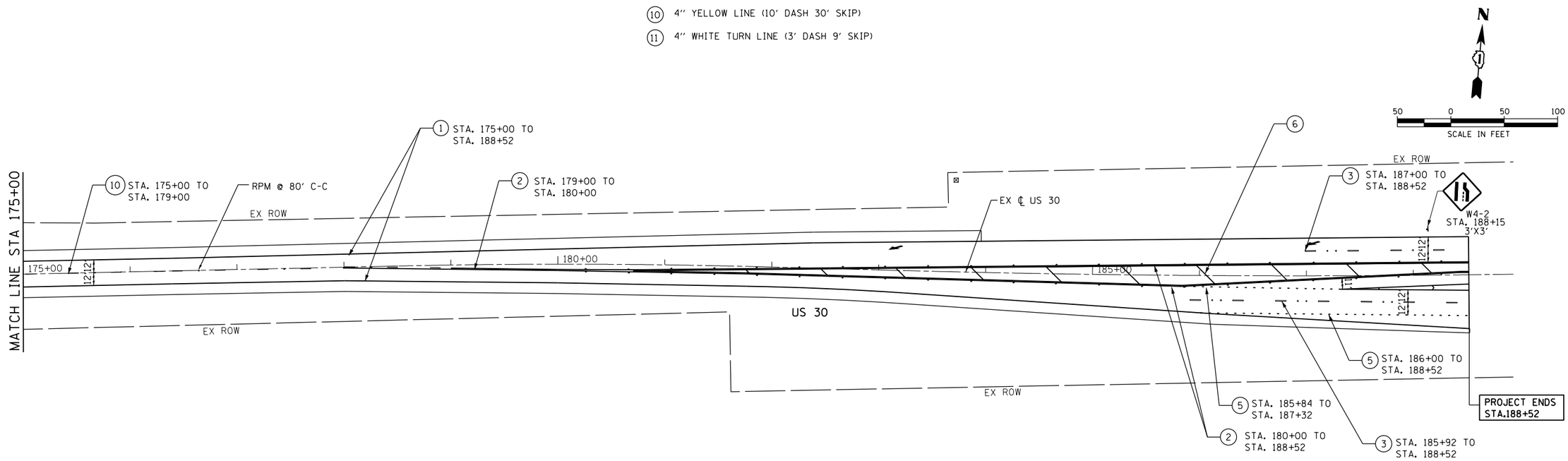

PM-4

COMPANY NAME: $COMPANY.NAME$
PROJECT CONTACT: $PROJECT.CONTACT$
CLIENT: $CLIENT$
DATE PLOTTED: $DATE$ $TIME$
FILE NAME: $FILES$
PLOT DRIVER: $PLT.DRV$
PEN TABLE: $PEN.TABLE$

AMES Engineering, Inc. CONSULTING ENGINEERS 5413 Walnut Avenue, Suite 2F Downers Grove, IL 60515	USER NAME = $USER$	DESIGNED - MSA	REVISED -	STATE OF ILLINOIS DEPARTMENT OF TRANSPORTATION	US 30 AT DUGAN ROAD PAVEMENT MARKING AND SIGNING PLAN
		DRAWN - RV	REVISED -		
	PLOT SCALE = $SCALE$	CHECKED - AS	REVISED -		
	PLOT DATE = $DATE$	DATE - 10-17-14	REVISED -		SCALE: 1''=50' SHEE$TITLE3$ OF$TITLE4$SHEETS STA. $TITLE5$ TO STA.$TITLE6$

F.A.U. RTE.	SECTION	COUNTY	TOTAL SHEETS	SHEET NO.
573	30-N(13)	KANE	219	101
		CONTRACT NO. 60X70		
	ILLINOIS	FED. AID PROJECT		

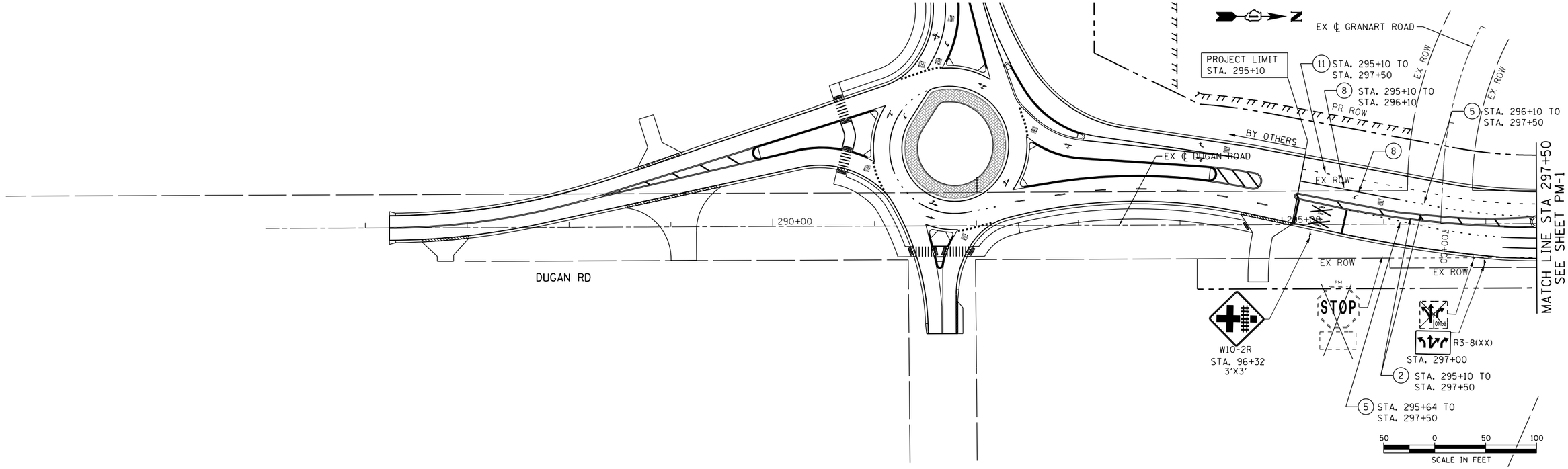

LEGEND

- G GUARDRAIL MARKERS, TYPE A (635006/635011)
- RAISED REFLECTIVE PAVEMENT MARKER. (RPM) (40' C UNLESS OTHERWISE NOTED) TWO -WAY AMBER MARKER (781001)
- RAISED REFLECTIVE PAVEMENT MARKERS (RPM) (40' C UNLESS OTHERWISE NOTED) ONE WAY CRYSTAL (781001)
- EXISTING SIGN
- PROPOSED SIGN (WIDTH X HEIGHT)

STRIPING LEGEND

1. 4'' WHITE EDGE LINE
2. 4'' DOUBLE YELLOW LINE, 11'' C-C
3. 4'' WHITE LINE (10' DASH 30' SKIP)
4. 6'' WHITE TURN LANE LINE
5. 6'' WHITE TURN LINE (2' DASH 6' SKIP)
6. 12'' YELLOW DIAGONAL LINE AT 75' C-C
7. 24'' WHITE STOP LINE
8. LETTERS AND SYMBOLS
9. 6'' WHITE LINE 96'' C-C 45 DEGREE TO PAVEMENT
10. 4'' YELLOW LINE (10' DASH 30' SKIP)
11. 4'' WHITE TURN LINE (3' DASH 9' SKIP)

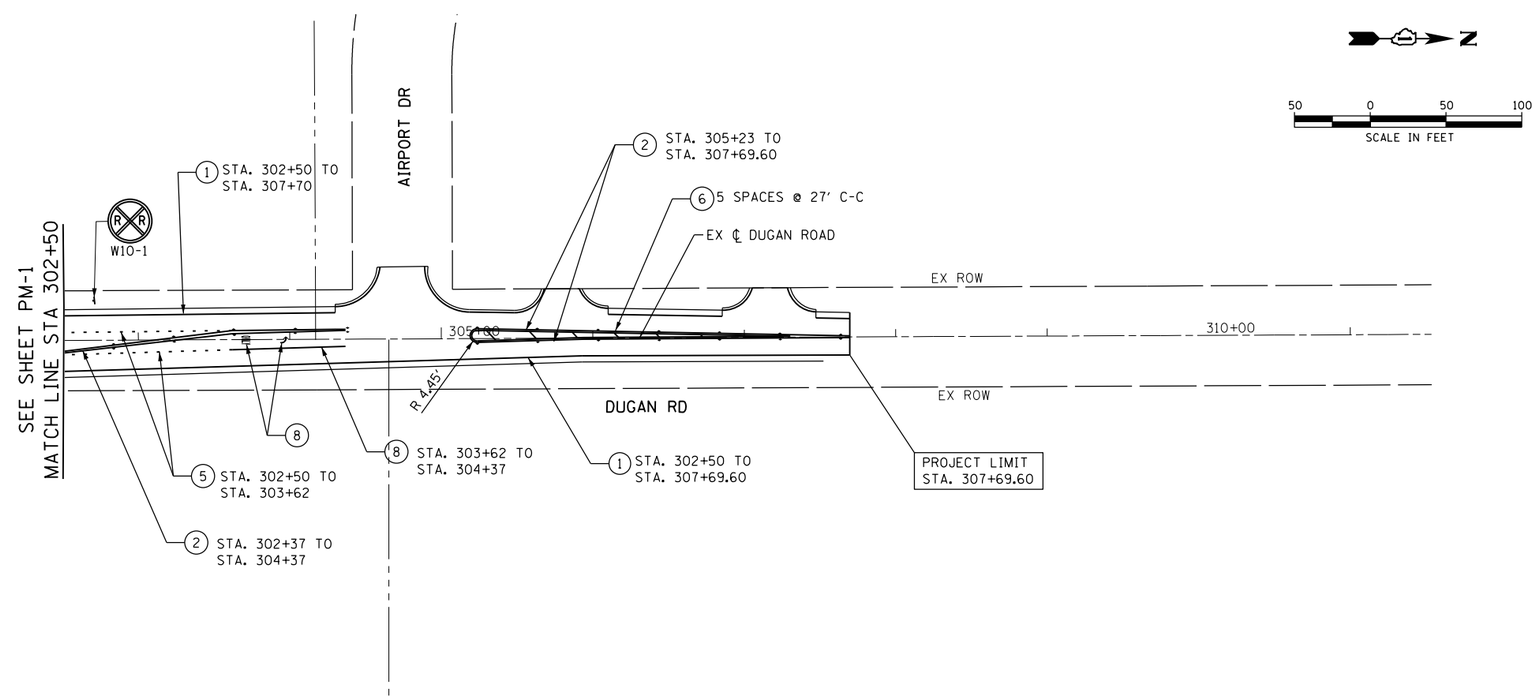

PM-5

COMPANY NAME: $COMPANY_NAME$
PROJECT CONTACT: $PROJECT_CONTACT$
CLIENT: $CLIENT$
DATE PLOTTED: $DATE$ $TIME$
FILE NAME: $FILES$
PLOT DRIVER: PLT_DRV
PEN TABLE: PEN_TABLE

AMES Engineering, Inc. CONSULTING ENGINEERS 5413 Walnut Avenue, Suite 2F Downers Grove, IL 60515	USER NAME = $USER$	DESIGNED - MSA	REVISED -	STATE OF ILLINOIS DEPARTMENT OF TRANSPORTATION	US 30 AT DUGAN ROAD PAVEMENT MARKING AND SIGNING PLAN	F.A.U. RTE.	SECTION	COUNTY	TOTAL SHEETS / SHEET NO.
		DRAWN - RV	REVISED -			573	30-N(13)	KANE	219 / 102
	PLOT SCALE = $SCALE$	CHECKED - AS	REVISED -					CONTRACT NO. 60X70	
	PLOT DATE = $DATE$	DATE - 10-17-14	REVISED -		SCALE: 1''=50' SHEE$TITLE3$ OF$TITLE4$SHEETS STA. $TITLE5$ TO STA.$TITLE6$		ILLINOIS FED. AID PROJECT		

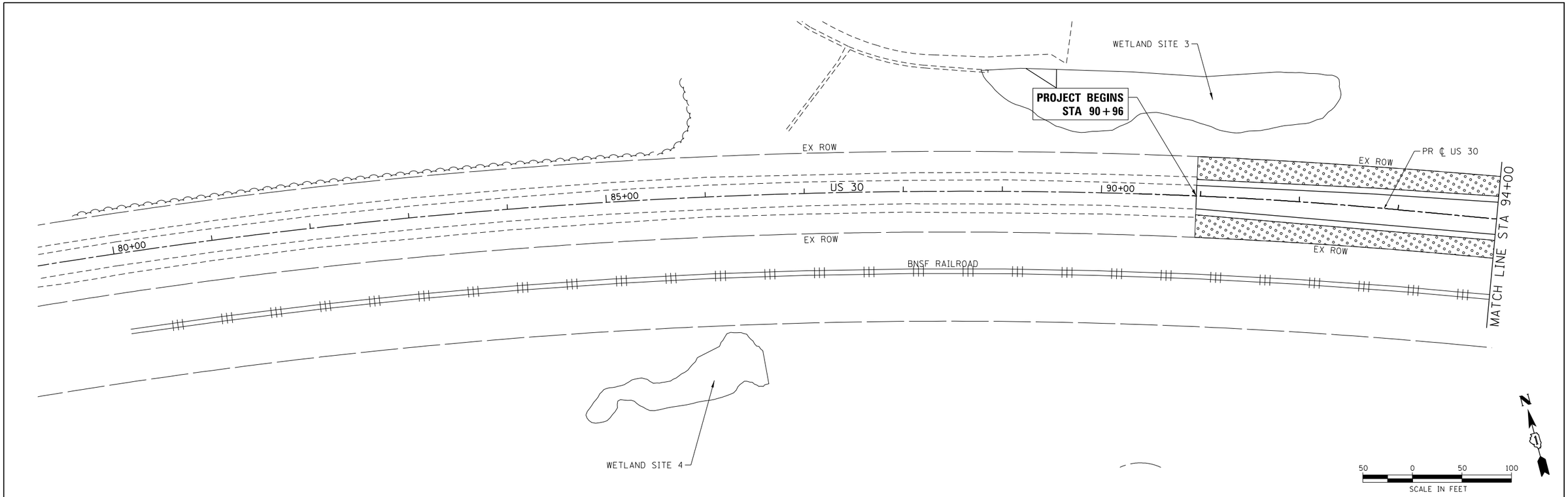

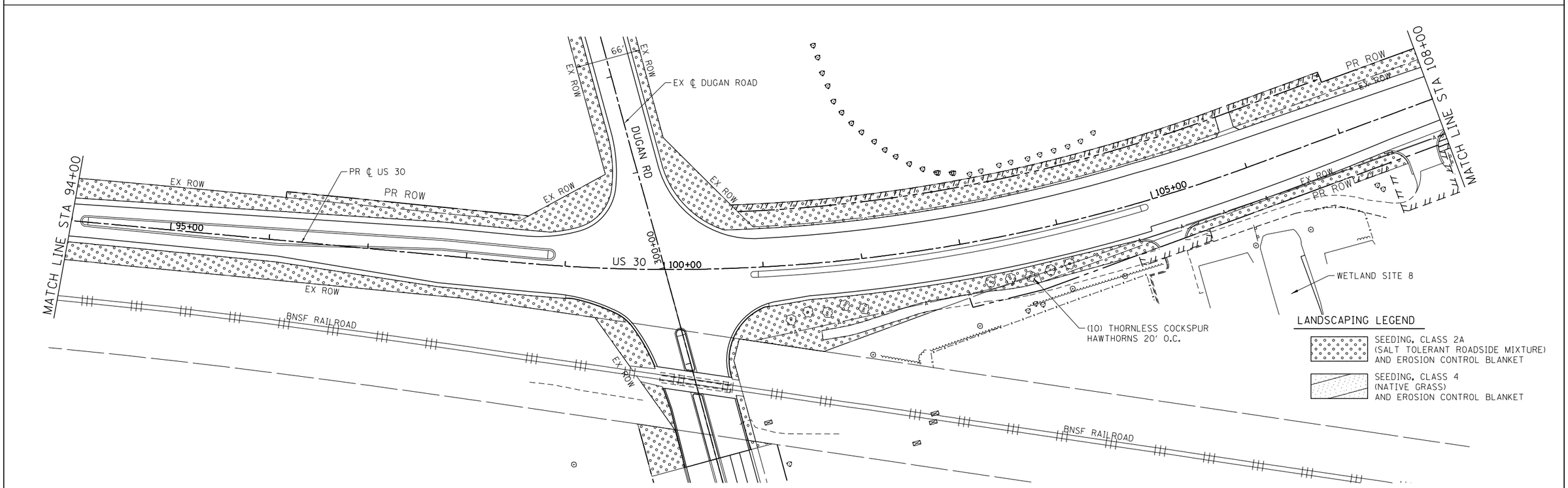

COMPANY NAME:
PROJECT CONTACT:
CLIENT:
DATE PLOTTED: 10/20/2014 11:50:17 AM
FILE NAME: p9120113-sht-hndscp-001.dgn
PLOT DRIVER: pdf.pltt
PEN TABLE: standard-trans-screen.tbl

HRGreen.com Illinois Professional Design Firm # 184-001322	USER NAME = dstancz	DESIGNED -	REVISED -	**STATE OF ILLINOIS DEPARTMENT OF TRANSPORTATION**	**LANDSCAPE PLANS US ROUTE 30**	F.A.P. RTE.	SECTION	COUNTY	TOTAL SHEETS	SHEET NO.
		DRAWN -	REVISED -			573	30-N(13)	KANE	219	103
	PLOT SCALE =	CHECKED -	REVISED -					CONTRACT NO. 60X70		
	PLOT DATE = 10/20/2014	DATE - 10/20/2014	REVISED -		SCALE: 1"=50' SHEET 1 OF 5 SHEETS STA. 90+96 TO STA.108+00			ILLINOIS FED. AID PROJECT		

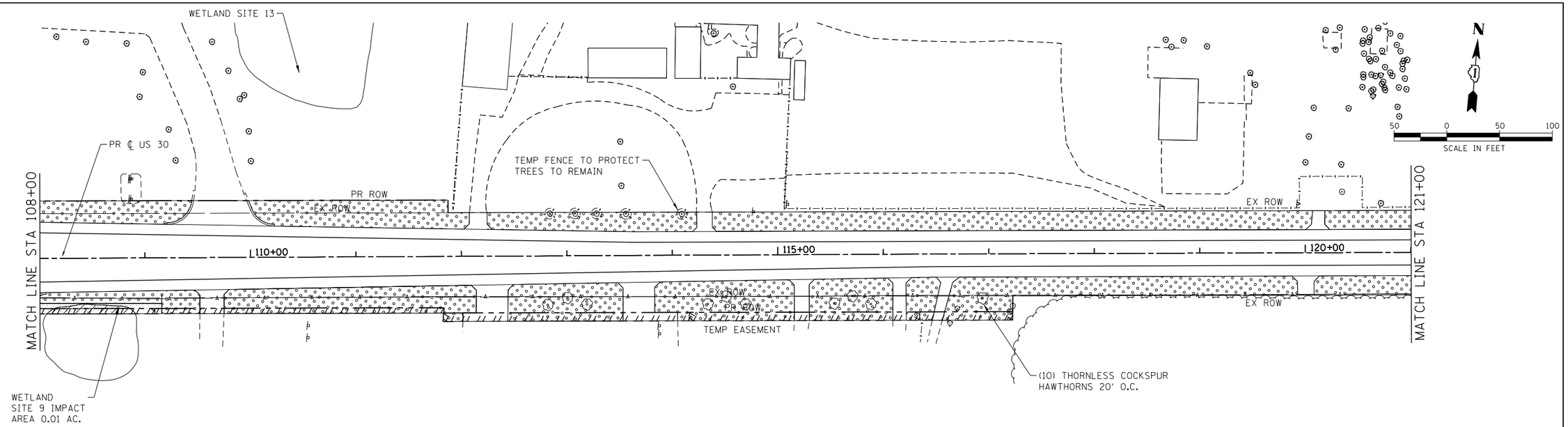

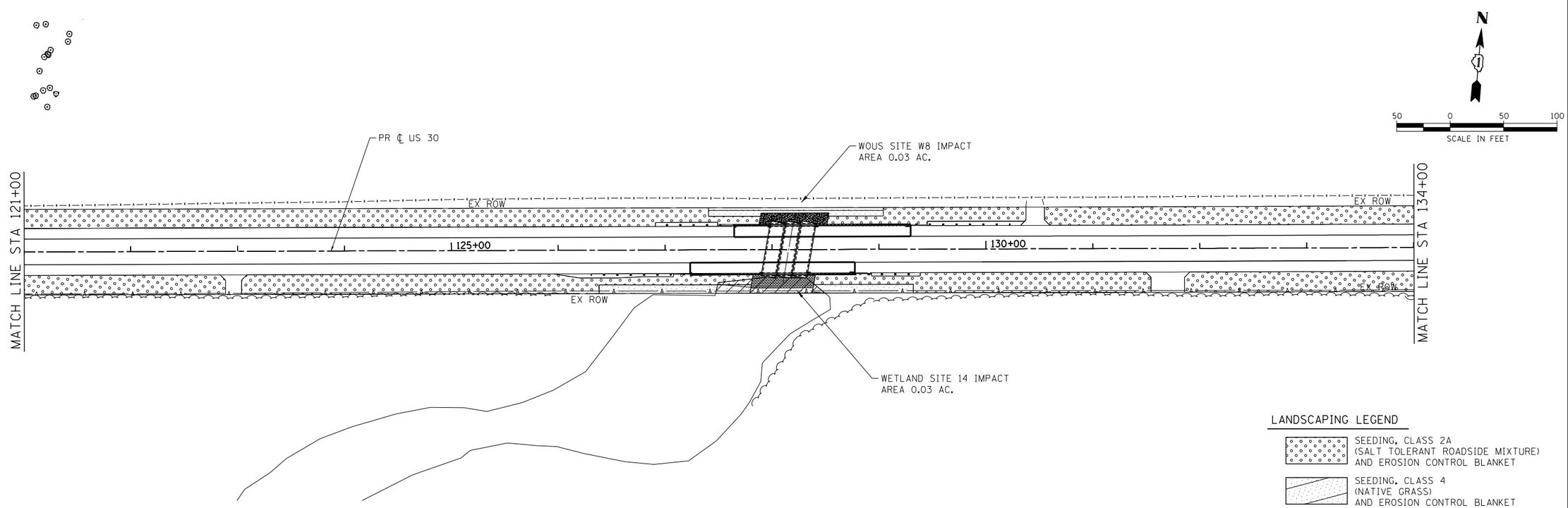

LANDSCAPING LEGEND

SEEDING, CLASS 2A (SALT TOLERANT ROADSIDE MIXTURE) AND EROSION CONTROL BLANKET

SEEDING, CLASS 4 (NATIVE GRASS) AND EROSION CONTROL BLANKET

COMPANY NAME:
PROJECT CONTACT:
CLIENT:
DATE PLOTTED: 10/20/2014 11:50:23 AM
FILE NAME: p912013-sht-lndscp-002.dgn
PLOT DRIVER: pdf.pltt
PEN TABLE: standard-trans-screen.tbl

HRGreen.com Illinois Professional Design Firm # 184-001322	USER NAME = dstancz	DESIGNED -	REVISED -
		DRAWN -	REVISED -
	PLOT SCALE =	CHECKED -	REVISED -
	PLOT DATE = 10/20/2014	DATE - 10/20/2014	REVISED -

STATE OF ILLINOIS
DEPARTMENT OF TRANSPORTATION

LANDSCAPE PLANS
US ROUTE 30

SCALE: 1"=50' | SHEET 2 OF 5 SHEETS | STA. 108+00 TO STA.134+00

F.A.P. RTE.	SECTION	COUNTY	TOTAL SHEETS	SHEET NO.
573	30-N(13)	KANE	219	104
		CONTRACT NO. 60X70		
		ILLINOIS FED. AID PROJECT		

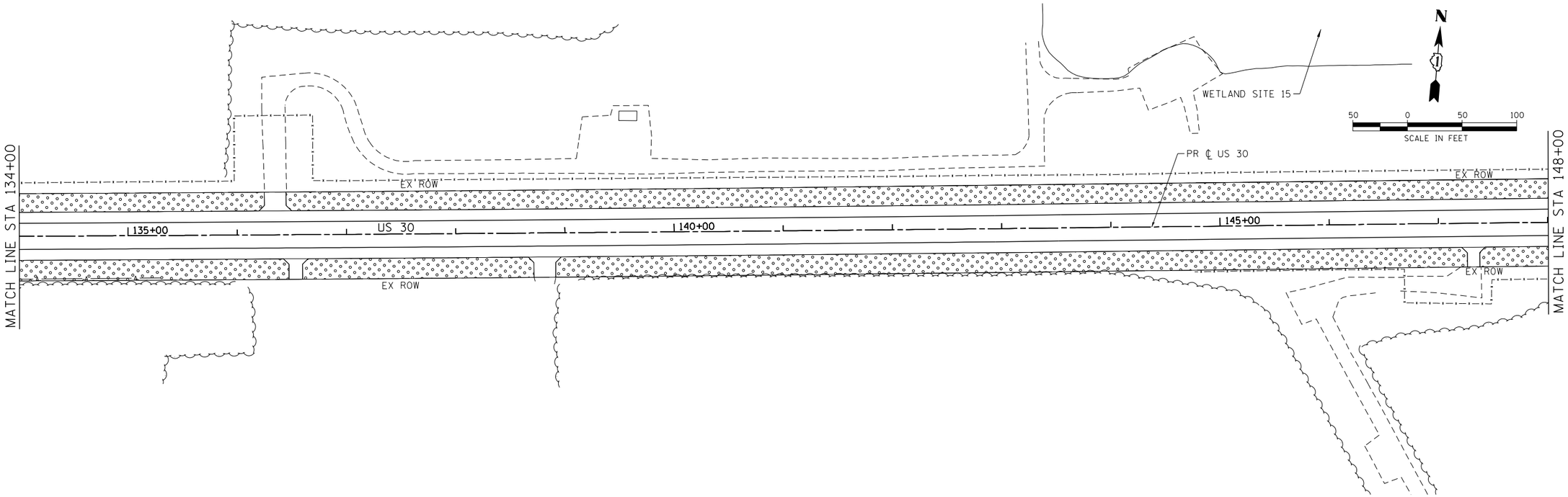

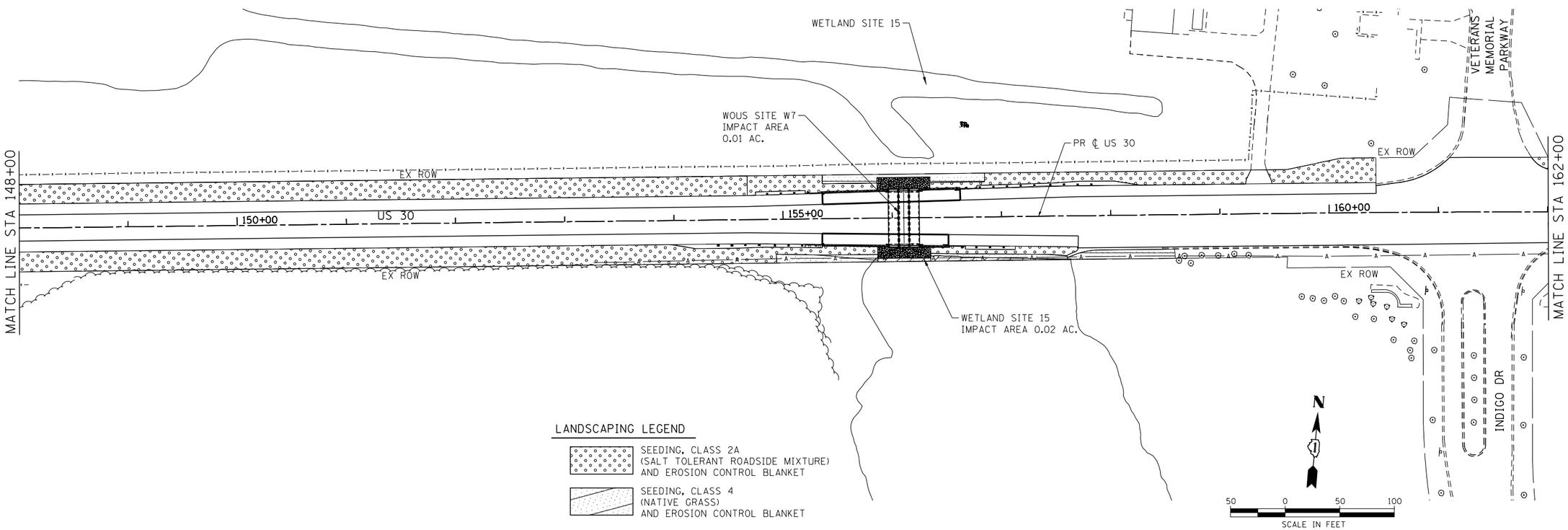

LANDSCAPING LEGEND

SEEDING, CLASS 2A
(SALT TOLERANT ROADSIDE MIXTURE)
AND EROSION CONTROL BLANKET

SEEDING, CLASS 4
(NATIVE GRASS)
AND EROSION CONTROL BLANKET

COMPANY NAME:
PROJECT CONTACT:
CLIENT:
DATE PLOTTED: 10/20/2014 11:50:30 AM
FILE NAME: p912013-sht-lndscp-003.dgn
PLOT DRIVER: pdf.pltr
PEN TABLE: standard-trans-screen.tbl

HRGreen.com
Illinois Professional Design Firm
184-001322

USER NAME = dstancz	DESIGNED -	REVISED -
	DRAWN -	REVISED -
PLOT SCALE =	CHECKED -	REVISED -
PLOT DATE = 10/20/2014	DATE - 10/20/2014	REVISED -

STATE OF ILLINOIS
DEPARTMENT OF TRANSPORTATION

LANDSCAPE PLANS
US ROUTE 30

SCALE: 1"=50' | SHEET 3 OF 5 SHEETS | STA. 134+00 TO STA.162+00

F.A.P. RTE.	SECTION	COUNTY	TOTAL SHEETS	SHEET NO.
573	30-N(13)	KANE	219	105
		CONTRACT NO. 60X70		
		ILLINOIS FED. AID PROJECT		

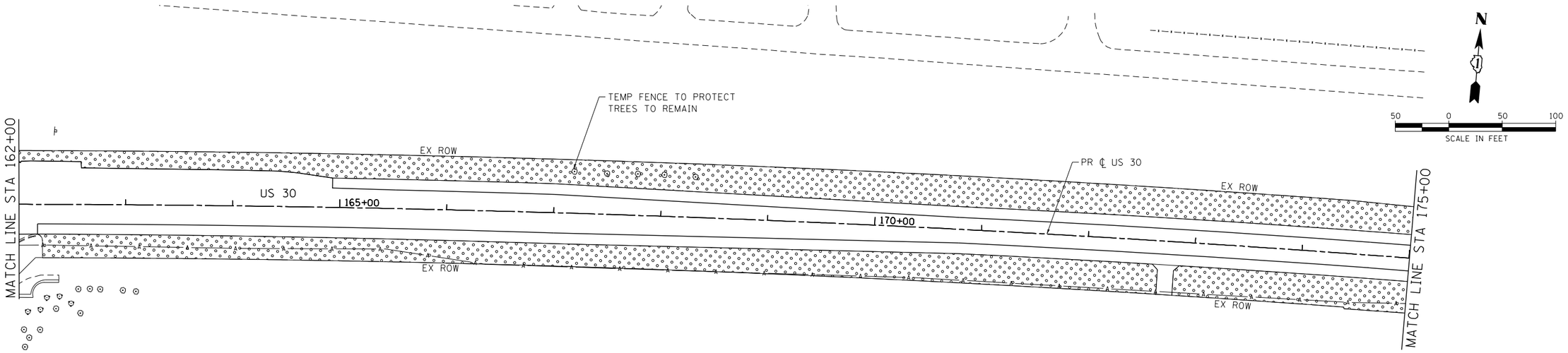

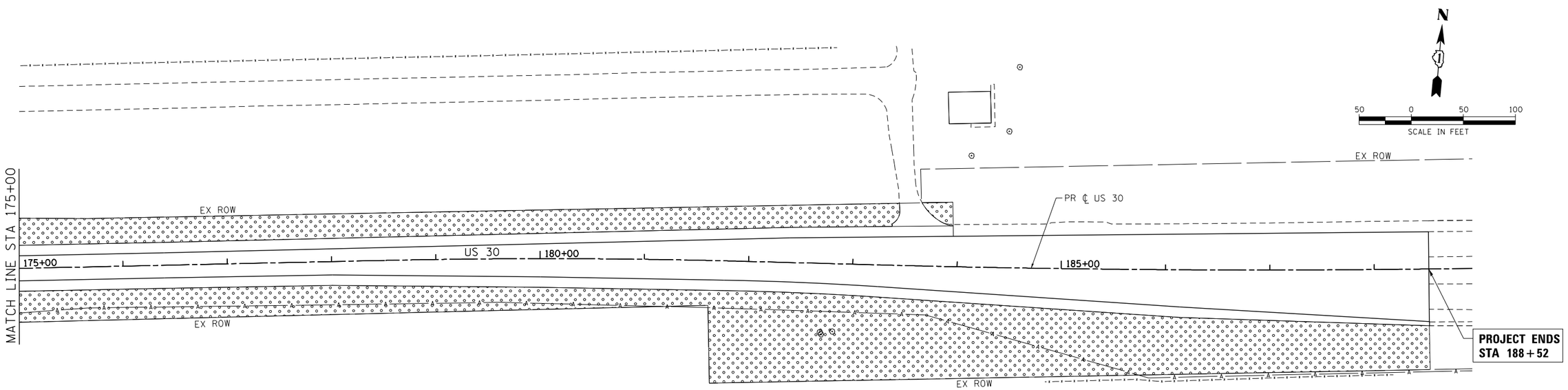

LANDSCAPING LEGEND

SEEDING, CLASS 2A
(SALT TOLERANT ROADSIDE MIXTURE)
AND EROSION CONTROL BLANKET

SEEDING, CLASS 4
(NATIVE GRASS)
AND EROSION CONTROL BLANKET

COMPANY NAME:
PROJECT CONTACT:
CLIENT:
DATE PLOTTED: 10/20/2014 11:50:36 AM
FILE NAME: p912013-sht-indscp-004.dgn
PLOT DRIVER: pdf.pltˆ
PEN TABLE: standard-trans-screen.tbl

HRGreen.com Illinois Professional Design Firm # 184-001322	USER NAME = dstancz	DESIGNED -	REVISED -	STATE OF ILLINOIS DEPARTMENT OF TRANSPORTATION	LANDSCAPE PLANS US ROUTE 30	F.A.P. RTE.	SECTION	COUNTY	TOTAL SHEETS	SHEET NO.
		DRAWN -	REVISED -			573	30-N(13)	KANE	219	106
	PLOT SCALE =	CHECKED -	REVISED -					CONTRACT NO. 60X70		
	PLOT DATE = 10/20/2014	DATE - 10/20/2014	REVISED -		SCALE: 1"=50' SHEET 4 OF 5 SHEETS STA. 162+00 TO STA. 307+70			ILLINOIS FED. AID PROJECT		

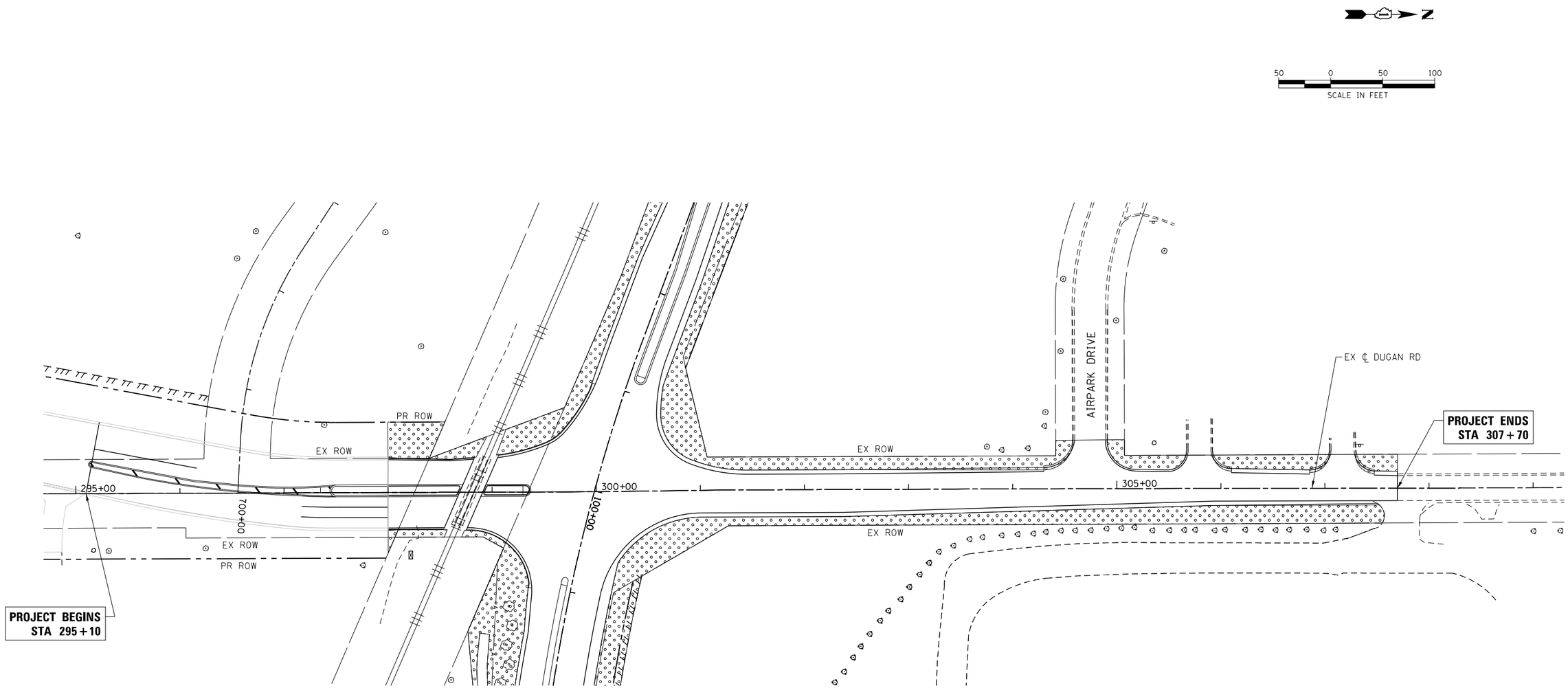

LANDSCAPING LEGEND

SEEDING, CLASS 2A
(SALT TOLERANT ROADSIDE MIXTURE)
AND EROSION CONTROL BLANKET

SEEDING, CLASS 4
(NATIVE GRASS)
AND EROSION CONTROL BLANKET

COMPANY NAME:
PROJECT CONTACT:
CLIENT:
DATE PLOTTED: 10/20/2014 11:50:41 AM
FILE NAME: p9120113-sht-lndscp-005.dgn
PLOT DRIVER: pdf.pltr
PEN TABLE: standard-trans-screen.tbl

HRGreen.com
Illinois Professional Design Firm
184-001322
HRGreen

USER NAME = dstancz	DESIGNED -	REVISED -	
FILE NAME = p9120113-sht-lndscp-005.dgn	DRAWN -	REVISED -	
PLOT SCALE =	CHECKED -	REVISED -	
PLOT DATE = 10/20/2014	DATE - 10/20/14	REVISED -	

STATE OF ILLINOIS
DEPARTMENT OF TRANSPORTATION

LANDSCAPE PLANS
DUGAN ROAD

SCALE: | SHEET NO. 5 OF 5 SHEETS | STA. 295+10 TO STA. 307+70

F.A.P. RTE.	SECTION	COUNTY	TOTAL SHEETS	SHEET NO.
573	30-N(13)	KANE	219	107

CONTRACT NO. 60X70

FED. ROAD DIST. NO. | ILLINOIS | FED. AID PROJECT

THE FOLLOWING ITEMS SHALL BE REMOVED BY THE CONTRACTOR AND SHALL BE DISPOSED OF BY THEM OUTSIDE THE RIGHT-OF-WAY AT THEIR EXPENCE. THE SALVAGE VALUE OF THE REMOVED EQUIPMENT SHALL BE REFLECTED IN THE CONTRACT BID PRICE.

1	EACH	CONTROLLER AND CABINET (COMPLETE)
10	EACH	SIGNAL HEAD, 1-FACE, 3-SECTION
3	EACH	SIGNAL HEAD, 1-FACE, 4-SECTION
2	EACH	SIGNAL HEAD, 2-FACE, 3-SECTION
1	EACH	SIGNAL HEAD, 2-FACE, 1-3-SECTION, 1-4 SECTION
1	EACH	SIGNAL HEAD, SPECIAL
4	EACH	STEEL MAST ARM AND POLE
6	EACH	SIGNAL POST
11	EACH	TRAFFIC SIGNAL BACKPLATE
4	EACH	ILLIMINATED SIGN, FIBER OPTIC
1	EACH	SERVICE INSTALLATION POLE MOUNTED

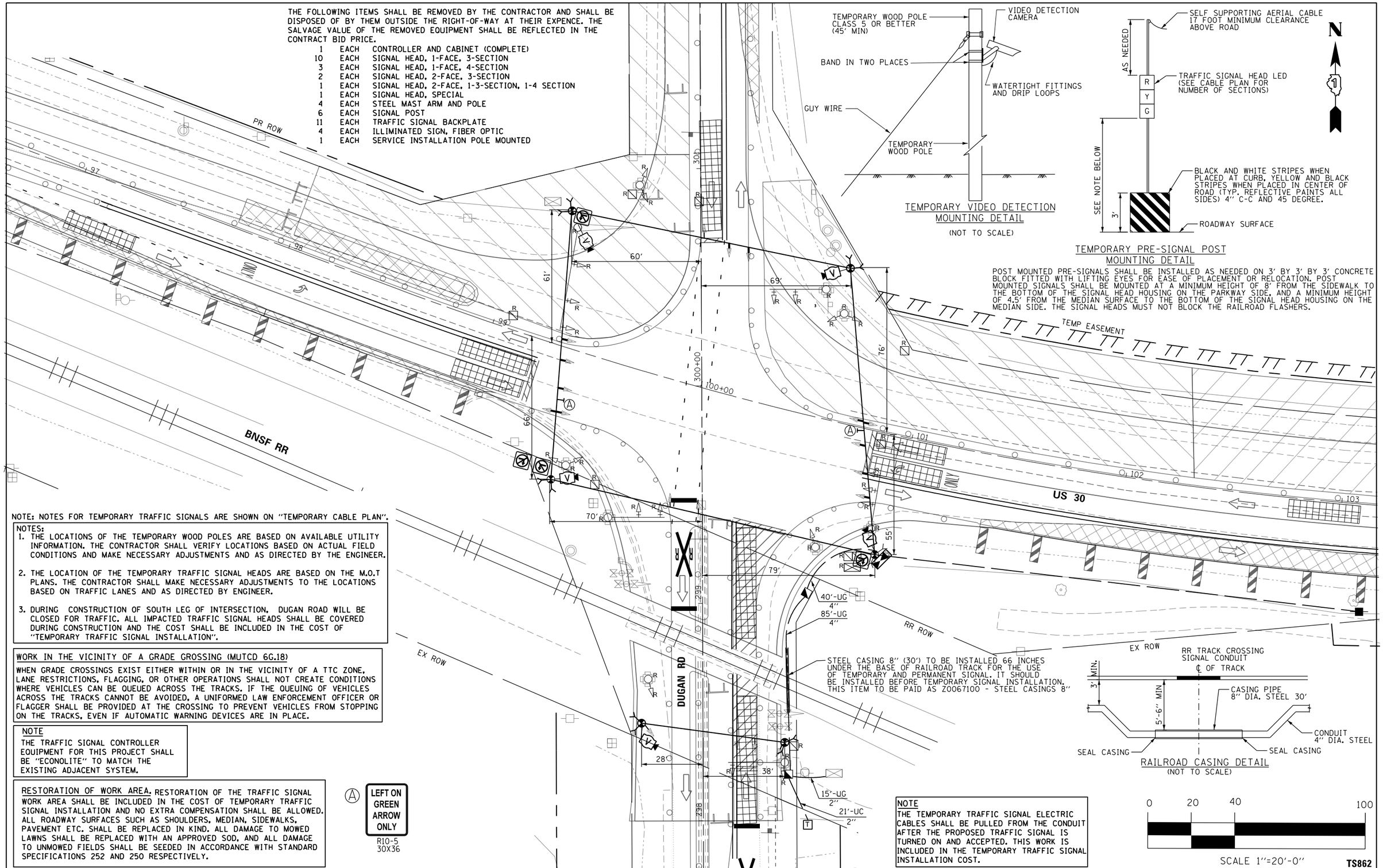

TEMPORARY VIDEO DETECTION MOUNTING DETAIL

(NOT TO SCALE)

TEMPORARY PRE-SIGNAL POST MOUNTING DETAIL

POST MOUNTED PRE-SIGNALS SHALL BE INSTALLED AS NEEDED ON 3' BY 3' BY 3' CONCRETE BLOCK FITTED WITH LIFTING EYES FOR EASE OF PLACEMENT OR RELOCATION. POST MOUNTED SIGNALS SHALL BE MOUNTED AT A MINIMUM HEIGHT OF 8' FROM THE SIDEWALK TO THE BOTTOM OF THE SIGNAL HEAD HOUSING ON THE PARKWAY SIDE, AND A MINIMUM HEIGHT OF 4.5' FROM THE MEDIAN SURFACE TO THE BOTTOM OF THE SIGNAL HEAD HOUSING ON THE MEDIAN SIDE. THE SIGNAL HEADS MUST NOT BLOCK THE RAILROAD FLASHERS.

NOTE: NOTES FOR TEMPORARY TRAFFIC SIGNALS ARE SHOWN ON "TEMPORARY CABLE PLAN".

NOTES:

1. THE LOCATIONS OF THE TEMPORARY WOOD POLES ARE BASED ON AVAILABLE UTILITY INFORMATION. THE CONTRACTOR SHALL VERIFY LOCATIONS BASED ON ACTUAL FIELD CONDITIONS AND MAKE NECESSARY ADJUSTMENTS AND AS DIRECTED BY THE ENGINEER.
2. THE LOCATION OF THE TEMPORARY TRAFFIC SIGNAL HEADS ARE BASED ON THE M.O.T PLANS. THE CONTRACTOR SHALL MAKE NECESSARY ADJUSTMENTS TO THE LOCATIONS BASED ON TRAFFIC LANES AND AS DIRECTED BY ENGINEER.
3. DURING CONSTRUCTION OF SOUTH LEG OF INTERSECTION, DUGAN ROAD WILL BE CLOSED FOR TRAFFIC. ALL IMPACTED TRAFFIC SIGNAL HEADS SHALL BE COVERED DURING CONSTRUCTION AND THE COST SHALL BE INCLUDED IN THE COST OF "TEMPORARY TRAFFIC SIGNAL INSTALLATION".

WORK IN THE VICINITY OF A GRADE GROSSING (MUTCD 6G.18)

WHEN GRADE CROSSINGS EXIST EITHER WITHIN OR IN THE VICINITY OF A TTC ZONE, LANE RESTRICTIONS, FLAGGING, OR OTHER OPERATIONS SHALL NOT CREATE CONDITIONS WHERE VEHICLES CAN BE QUEUED ACROSS THE TRACKS. IF THE QUEUING OF VEHICLES ACROSS THE TRACKS CANNOT BE AVOIDED, A UNIFORMED LAW ENFORCEMENT OFFICER OR FLAGGER SHALL BE PROVIDED AT THE CROSSING TO PREVENT VEHICLES FROM STOPPING ON THE TRACKS, EVEN IF AUTOMATIC WARNING DEVICES ARE IN PLACE.

NOTE

THE TRAFFIC SIGNAL CONTROLLER EQUIPMENT FOR THIS PROJECT SHALL BE "ECONOLITE" TO MATCH THE EXISTING ADJACENT SYSTEM.

RESTORATION OF WORK AREA. RESTORATION OF THE TRAFFIC SIGNAL WORK AREA SHALL BE INCLUDED IN THE COST OF TEMPORARY TRAFFIC SIGNAL INSTALLATION AND NO EXTRA COMPENSATION SHALL BE ALLOWED. ALL ROADWAY SURFACES SUCH AS SHOULDERS, MEDIAN, SIDEWALKS, PAVEMENT ETC. SHALL BE REPLACED IN KIND. ALL DAMAGE TO MOWED LAWNS SHALL BE REPLACED WITH AN APPROVED SOD, AND ALL DAMAGE TO UNMOWED FIELDS SHALL BE SEEDED IN ACCORDANCE WITH STANDARD SPECIFICATIONS 252 AND 250 RESPECTIVELY.

RAILROAD CASING DETAIL

(NOT TO SCALE)

NOTE

THE TEMPORARY TRAFFIC SIGNAL ELECTRIC CABLES SHALL BE PULLED FROM THE CONDUIT AFTER THE PROPOSED TRAFFIC SIGNAL IS TURNED ON AND ACCEPTED. THIS WORK IS INCLUDED IN THE TEMPORARY TRAFFIC SIGNAL INSTALLATION COST.

0 20 40 100

SCALE 1"=20'-0"

TS862

FILE NAME = $FILEL$

AMES Engineering, Inc.
CONSULTING ENGINEERS
1341 Warren Avenue
Downers Grove, IL 60515

USER NAME = $USER$	DESIGNED - AS	REVISED -
	DRAWN - RV	REVISED -
PLOT SCALE = $SCALE$	CHECKED - MSA	REVISED -
PLOT DATE = $DATE$	DATE - 10-17-14	REVISED -

STATE OF ILLINOIS
DEPARTMENT OF TRANSPORTATION

TEMPORARY TRAFFIC SIGNAL PLAN – STAGE 1
US 30 AND DUGAN ROAD

SCALE: | SHEET NO. OF SHEETS | STA. TO STA.

F.A. RTE.	SECTION	COUNTY	TOTAL SHEETS	SHEET NO.
573	30-N (13)	KANE	219	108
		CONTRACT NO. 60X70		
FED. ROAD DIST. NO.	ILLINOIS	FED. AID PROJECT		

TS–01

NOTE:
STAGE 1A PLAN SHOWN TRAFFIC SIGNAL HEAD LOCATION ONLY.

N

PR ROW

BNSF RR

US 30

TEMP EASEMENT

RR ROW

EX ROW

DUGAN RD

STEEL CASING 8" TO BE INSTALLED IN STAGE 1.

60'
69'
61'
76'
70'
55'
78'
28'
38'
300+00
100+00
301
299
298
97
98
99
101
102
103

NOTE: NOTES FOR TEMPORARY TRAFFIC SIGNALS ARE SHOWN ON "TEMPORARY CABLE PLAN".

NOTES:
1. THE LOCATIONS OF THE TEMPORARY WOOD POLES ARE BASED ON AVAILABLE UTILITY INFORMATION. THE CONTRACTOR SHALL VERIFY LOCATIONS BASED ON ACTUAL FIELD CONDITIONS AND MAKE NECESSARY ADJUSTMENTS AND AS DIRECTED BY THE ENGINEER.

2. THE LOCATION OF THE TEMPORARY TRAFFIC SIGNAL HEADS ARE BASED ON THE M.O.T PLANS. THE CONTRACTOR SHALL MAKE NECESSARY ADJUSTMENTS TO THE LOCATIONS BASED ON TRAFFIC LANES AND AS DIRECTED BY ENGINEER.

3. DURING CONSTRUCTION OF SOUTH LEG OF INTERSECTION, DUGAN ROAD WILL BE CLOSED FOR TRAFFIC. ALL IMPACTED TRAFFIC SIGNAL HEADS SHALL BE COVERED DURING CONSTRUCTION AND THE COST SHALL BE INCLUDED IN THE COST OF "TEMPORARY TRAFFIC SIGNAL INSTALLATION".

WORK IN THE VICINITY OF A GRADE GROSSING (MUTCD 6G.18)

WHEN GRADE CROSSINGS EXIST EITHER WITHIN OR IN THE VICINITY OF A TTC ZONE, LANE RESTRICTIONS, FLAGGING, OR OTHER OPERATIONS SHALL NOT CREATE CONDITIONS WHERE VEHICLES CAN BE QUEUED ACROSS THE TRACKS. IF THE QUEUING OF VEHICLES ACROSS THE TRACKS CANNOT BE AVOIDED, A UNIFORMED LAW ENFORCEMENT OFFICER OR FLAGGER SHALL BE PROVIDED AT THE CROSSING TO PREVENT VEHICLES FROM STOPPING ON THE TRACKS, EVEN IF AUTOMATIC WARNING DEVICES ARE IN PLACE.

NOTE

THE TRAFFIC SIGNAL CONTROLLER EQUIPMENT FOR THIS PROJECT SHALL BE "ECONOLITE" TO MATCH THE EXISTING ADJACENT SYSTEM.

RESTORATION OF WORK AREA. RESTORATION OF THE TRAFFIC SIGNAL WORK AREA SHALL BE INCLUDED IN THE COST OF TEMPORARY TRAFFIC SIGNAL INSTALLATION AND NO EXTRA COMPENSATION SHALL BE ALLOWED. ALL ROADWAY SURFACES SUCH AS SHOULDERS, MEDIAN, SIDEWALKS, PAVEMENT ETC. SHALL BE REPLACED IN KIND. ALL DAMAGE TO MOWED LAWNS SHALL BE REPLACED WITH AN APPROVED SOD, AND ALL DAMAGE TO UNMOWED FIELDS SHALL BE SEEDED IN ACCORDANCE WITH STANDARD SPECIFICATIONS 252 AND 250 RESPECTIVELY.

Ⓐ LEFT ON GREEN ARROW ONLY
R10-5
30x36

0 20 40 100
SCALE 1"=20'-0"

TS862

FILE NAME = $FILEL$

AMES Engineering, Inc.
CONSULTING ENGINEERS
1341 Warren Avenue
Downers Grove, IL 60515

USER NAME = $USER$	DESIGNED - AS	REVISED -
	DRAWN - RV	REVISED -
PLOT SCALE = $SCALE$	CHECKED - MSA	REVISED -
PLOT DATE = $DATE$	DATE - 10-17-14	REVISED -

STATE OF ILLINOIS
DEPARTMENT OF TRANSPORTATION

TEMPORARY TRAFFIC SIGNAL PLAN – STAGE 1A
US 30 AND DUGAN ROAD

SCALE: | SHEET NO. OF SHEETS | STA. TO STA.

F.A. RTE.	SECTION	COUNTY	TOTAL SHEETS	SHEET NO.
573	30-N (13)	KANE	219	109
		CONTRACT NO. 60X70		
FED. ROAD DIST. NO.	ILLINOIS	FED. AID PROJECT		

TS–02

NOTE:
STAGE 2 PLAN SHOWN TRAFFIC SIGNAL HEAD LOCATION ONLY.

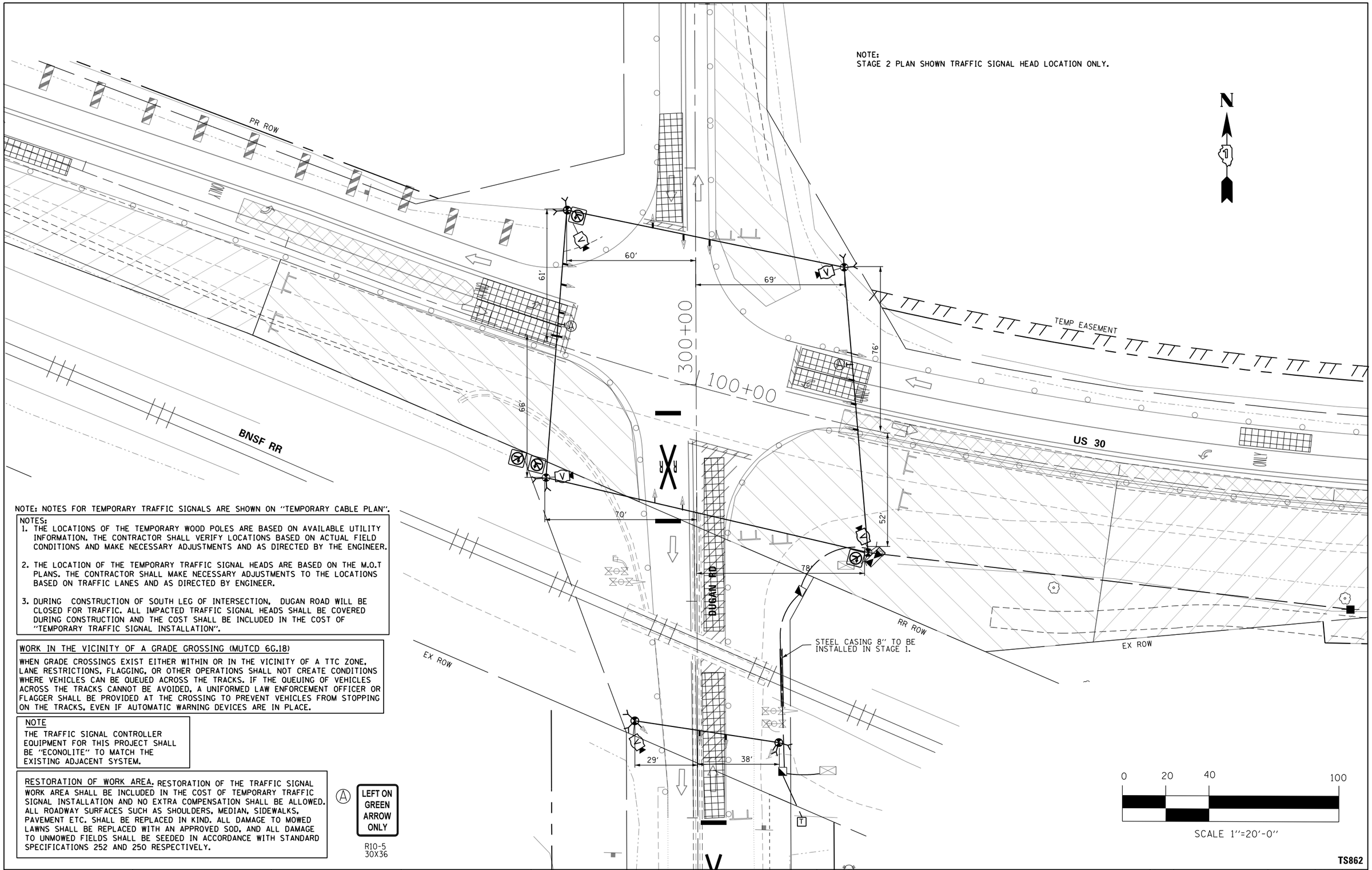

NOTE: NOTES FOR TEMPORARY TRAFFIC SIGNALS ARE SHOWN ON "TEMPORARY CABLE PLAN".

NOTES:
1. THE LOCATIONS OF THE TEMPORARY WOOD POLES ARE BASED ON AVAILABLE UTILITY INFORMATION. THE CONTRACTOR SHALL VERIFY LOCATIONS BASED ON ACTUAL FIELD CONDITIONS AND MAKE NECESSARY ADJUSTMENTS AND AS DIRECTED BY THE ENGINEER.
2. THE LOCATION OF THE TEMPORARY TRAFFIC SIGNAL HEADS ARE BASED ON THE M.O.T PLANS. THE CONTRACTOR SHALL MAKE NECESSARY ADJUSTMENTS TO THE LOCATIONS BASED ON TRAFFIC LANES AND AS DIRECTED BY ENGINEER.
3. DURING CONSTRUCTION OF SOUTH LEG OF INTERSECTION, DUGAN ROAD WILL BE CLOSED FOR TRAFFIC. ALL IMPACTED TRAFFIC SIGNAL HEADS SHALL BE COVERED DURING CONSTRUCTION AND THE COST SHALL BE INCLUDED IN THE COST OF "TEMPORARY TRAFFIC SIGNAL INSTALLATION".

WORK IN THE VICINITY OF A GRADE GROSSING (MUTCD 6G.18)

WHEN GRADE CROSSINGS EXIST EITHER WITHIN OR IN THE VICINITY OF A TTC ZONE, LANE RESTRICTIONS, FLAGGING, OR OTHER OPERATIONS SHALL NOT CREATE CONDITIONS WHERE VEHICLES CAN BE QUEUED ACROSS THE TRACKS. IF THE QUEUING OF VEHICLES ACROSS THE TRACKS CANNOT BE AVOIDED, A UNIFORMED LAW ENFORCEMENT OFFICER OR FLAGGER SHALL BE PROVIDED AT THE CROSSING TO PREVENT VEHICLES FROM STOPPING ON THE TRACKS, EVEN IF AUTOMATIC WARNING DEVICES ARE IN PLACE.

NOTE

THE TRAFFIC SIGNAL CONTROLLER EQUIPMENT FOR THIS PROJECT SHALL BE "ECONOLITE" TO MATCH THE EXISTING ADJACENT SYSTEM.

RESTORATION OF WORK AREA. RESTORATION OF THE TRAFFIC SIGNAL WORK AREA SHALL BE INCLUDED IN THE COST OF TEMPORARY TRAFFIC SIGNAL INSTALLATION AND NO EXTRA COMPENSATION SHALL BE ALLOWED. ALL ROADWAY SURFACES SUCH AS SHOULDERS, MEDIAN, SIDEWALKS, PAVEMENT ETC. SHALL BE REPLACED IN KIND. ALL DAMAGE TO MOWED LAWNS SHALL BE REPLACED WITH AN APPROVED SOD, AND ALL DAMAGE TO UNMOWED FIELDS SHALL BE SEEDED IN ACCORDANCE WITH STANDARD SPECIFICATIONS 252 AND 250 RESPECTIVELY.

Ⓐ LEFT ON GREEN ARROW ONLY

R10-5
30X36

TS862

AMES Engineering, Inc. CONSULTING ENGINEERS 1341 Warren Avenue Downers Grove, IL 60515	USER NAME = $USER$	DESIGNED - AS	REVISED -	STATE OF ILLINOIS DEPARTMENT OF TRANSPORTATION	TEMPORARY TRAFFIC SIGNAL PLAN – STAGE 2 US 30 AND DUGAN ROAD	F.A. RTE.	SECTION	COUNTY	TOTAL SHEETS / SHEET NO.
		DRAWN - RV	REVISED -			573	30-N (13)	KANE	219 / 110
	PLOT SCALE = $SCALE$	CHECKED - MSA	REVISED -					CONTRACT NO. 60X70	
	PLOT DATE = $DATE$	DATE - 10-17-14	REVISED -		SCALE: SHEET NO. OF SHEETS STA. TO STA.	FED. ROAD DIST. NO.	ILLINOIS	FED. AID PROJECT	

FILE NAME = $FILEL$

TS–03

NOTE:
STAGE 3 PLAN SHOWN TRAFFIC SIGNAL HEAD LOCATION ONLY.

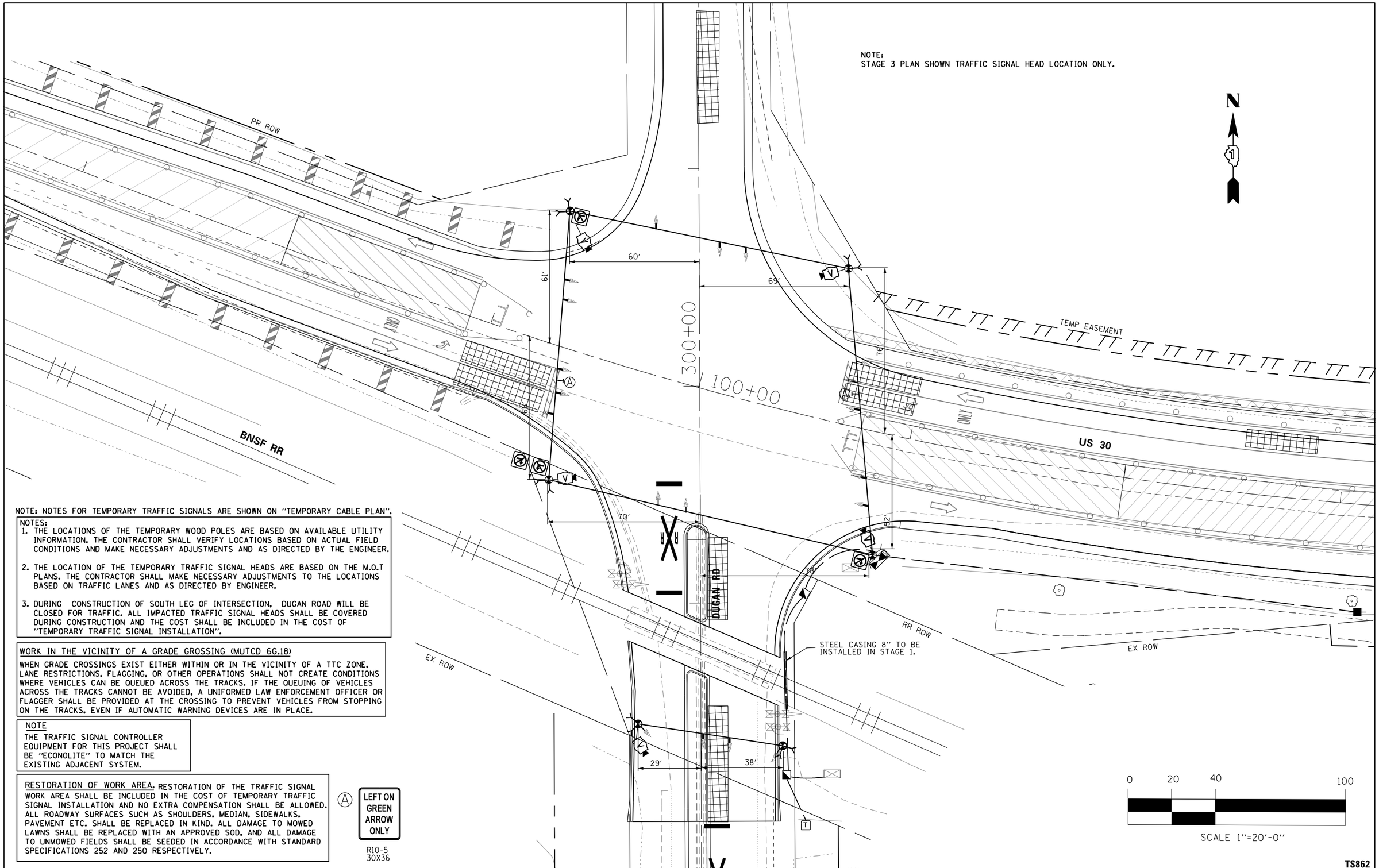

NOTE: NOTES FOR TEMPORARY TRAFFIC SIGNALS ARE SHOWN ON "TEMPORARY CABLE PLAN".

NOTES:
1. THE LOCATIONS OF THE TEMPORARY WOOD POLES ARE BASED ON AVAILABLE UTILITY INFORMATION. THE CONTRACTOR SHALL VERIFY LOCATIONS BASED ON ACTUAL FIELD CONDITIONS AND MAKE NECESSARY ADJUSTMENTS AND AS DIRECTED BY THE ENGINEER.
2. THE LOCATION OF THE TEMPORARY TRAFFIC SIGNAL HEADS ARE BASED ON THE M.O.T PLANS. THE CONTRACTOR SHALL MAKE NECESSARY ADJUSTMENTS TO THE LOCATIONS BASED ON TRAFFIC LANES AND AS DIRECTED BY ENGINEER.
3. DURING CONSTRUCTION OF SOUTH LEG OF INTERSECTION, DUGAN ROAD WILL BE CLOSED FOR TRAFFIC. ALL IMPACTED TRAFFIC SIGNAL HEADS SHALL BE COVERED DURING CONSTRUCTION AND THE COST SHALL BE INCLUDED IN THE COST OF "TEMPORARY TRAFFIC SIGNAL INSTALLATION".

WORK IN THE VICINITY OF A GRADE GROSSING (MUTCD 6G.18)

WHEN GRADE CROSSINGS EXIST EITHER WITHIN OR IN THE VICINITY OF A TTC ZONE, LANE RESTRICTIONS, FLAGGING, OR OTHER OPERATIONS SHALL NOT CREATE CONDITIONS WHERE VEHICLES CAN BE QUEUED ACROSS THE TRACKS. IF THE QUEUING OF VEHICLES ACROSS THE TRACKS CANNOT BE AVOIDED, A UNIFORMED LAW ENFORCEMENT OFFICER OR FLAGGER SHALL BE PROVIDED AT THE CROSSING TO PREVENT VEHICLES FROM STOPPING ON THE TRACKS, EVEN IF AUTOMATIC WARNING DEVICES ARE IN PLACE.

NOTE

THE TRAFFIC SIGNAL CONTROLLER EQUIPMENT FOR THIS PROJECT SHALL BE "ECONOLITE" TO MATCH THE EXISTING ADJACENT SYSTEM.

RESTORATION OF WORK AREA. RESTORATION OF THE TRAFFIC SIGNAL WORK AREA SHALL BE INCLUDED IN THE COST OF TEMPORARY TRAFFIC SIGNAL INSTALLATION AND NO EXTRA COMPENSATION SHALL BE ALLOWED. ALL ROADWAY SURFACES SUCH AS SHOULDERS, MEDIAN, SIDEWALKS, PAVEMENT ETC. SHALL BE REPLACED IN KIND. ALL DAMAGE TO MOWED LAWNS SHALL BE REPLACED WITH AN APPROVED SOD, AND ALL DAMAGE TO UNMOWED FIELDS SHALL BE SEEDED IN ACCORDANCE WITH STANDARD SPECIFICATIONS 252 AND 250 RESPECTIVELY.

Ⓐ LEFT ON GREEN ARROW ONLY

R10-5
30X36

TS862

FILE NAME = $FILE1$

AMES Engineering, Inc. CONSULTING ENGINEERS 1341 Warren Avenue Downers Grove, IL 60515	USER NAME = $USER$	DESIGNED - AS	REVISED -	STATE OF ILLINOIS DEPARTMENT OF TRANSPORTATION	TEMPORARY TRAFFIC SIGNAL PLAN – STAGE 3 US 30 AND DUGAN ROAD	F.A. RTE.	SECTION	COUNTY	TOTAL SHEETS / SHEET NO.
		DRAWN - RV	REVISED -			573	30-N (13)	KANE	219 / 111
	PLOT SCALE = $SCALE$	CHECKED - MSA	REVISED -					CONTRACT NO. 60X70	
	PLOT DATE = $DATE$	DATE - 10-17-14	REVISED -		SCALE: SHEET NO. OF SHEETS STA. TO STA.	FED. ROAD DIST. NO.	ILLINOIS	FED. AID PROJECT	

TS–04

NOTES FOR TEMPORARY TRAFFIC SIGNALS

1. ALL CONTROL EQUIPMENT INCLUDING EMERGENCY PRE-EMPTION AND COMMUNICATION DEVICES FOR THE TEMPORARY TRAFFIC SIGNAL (S) SHALL BE FURNISHED BY THE CONTRACTOR.

2. ONLY CONTROLLERS SUPPLIED BY ONE OF THE DISTRICT APPROVED CLOSED LOOP EQUIPMENT MANUFACTURERS WILL B E APPROVED FOR USE AT TEMPORARY SIGNAL LOCATIONS. ALL CONTROLLERS USED FOR TEMPORARY TRAFFIC SIGNALS SHALL BE FULLY ACTUATED NEMA MICROPROCESSOR BASED WITH RS232 DATA ENTRY POSTS COMPATIBLE WITH EXISTING MONITORING SOFTWARE APPROVED BY IDOT DISTRICT 1, INSTALLED IN A NEMA TS2 CABINET. ONLY ONE BRAND OF CONTROLLER WILL BE ACCEPTED FOR ANY ONE CONTRACT.

3. ALL TRAFFIC SIGNAL SECTIONS AND PEDESTRIAN SIGNAL SECTIONS SHALL BE LED AND 12" (300mm) DIAMETER, HEADS SHALL BE PLACED AS INDICATED ON THE TEMPORARY TRAFFIC SIGNAL PLAN OR AS DIRECTED BY THE ENGINEER. PEDESTRIAN SIGNALS SHALL INCLUDE SOLID INTERNATIONAL SYMBOLS. PEDESTRIAN SIGNALS ARE NOT TO BE INSTALLED AT A RAILROAD INTERSECTION. THE CONTRACTOR SHALL FURNISH ENOUGH CABLE SLACK TO RELOCATE HEADS TO ANY POSITION ON THE SPAN WIRE OR AT LOCATIONS ILLUTRATED ON THE PLANS FOR CONSTRUCTION STAGING. THE TEMPORARY TRAFFIC SIGNAL SHALL REMAIN IN OPERATION DURING ALL SIGNAL HEAD RELOCATIONS. EACH TEMPORAY TRAFFIC SIGNAL HEAD SHALL HAVE ITS OWN CABLE FROM THE CONTROLLER CABINET TO THE SIGNAL HEAD.

4. ALL EXISTING STREET NAME AND INTERSECTION REGULATORY SIGNS SHALL BE REMOVED FROM EXISTING POLES, RELOCTED AND SECURELY FASTENED TO THE SPAN WIRE OR WOOD POLE AS DIRECTED BY THE ENGINEER.

5. ANY TEMPORARY SIGNAL WITHIN AN EXISTING CLOSED LOOP TRAFFIC SIGNAL SYSTEM SHALL BE INTERCONNECTED TO THAT SYSTEM USING SIMILAR BRAND CONTROL EQUIPMENT.

6. THE TEMPORARY TRAFFIC SIGNAL SHALL HAVE THE SIGNAL HEAD DISPLAYS, SIGNAL HEAD PLACEMENTS AND CONTROLLER PHASING MATCH THE EXISTING TRAFFIC SIGNAL, ALL THE TIME OF THE TURN ON, IF NO TRAFFIC STAGING IS IN PLACE OR WILL NOT BE STAGED ON THE DAY OF THE TURN ON.

7. UNINTERRUPTIBLE POWER SUPPLY (UPS) SYSTEMS SHALL BE INSTALLLED AND MADE OPERATIONAL AT TEMPORARY TRAFFIC SIGNAL INSTALLATIONS WHERE UPS IS INSTALLED AT THE EXISTING TRAFFIC SIGNAL, TEMPORARY TRAFFIC SIGNALS AT RAILROAD INTERSECTIONS, AND TEMPORARY TRAFFIC SIGNALS AT INTERSECTIOS WITH FIRE STATION ACTUATED EMERGENCY VEHICLE PRE-EMPTION, OR WHEN INDICATED ON THE PLANS.

8. TRAFFIC SIGNAL MANAGEMENT SYSTEMS SHALL BE MAINTAINED IN OPERATION AS INDICATED ON THE PLANS OR AS DIRECTED BY THE ENGINEER. REQUIRED EQUIPMENT IN OPERATION TO THE SATISFACTION OF THE ENGINEER AND THE AGENCY RESPONSIBLE FOR THE TRAFFIC SIGNAL MANAGEMENT SYSTEM.

9. DETECTION AT TEMPORARY TRAFFIC SIGNALS SHALL BE INCLUDED FOR ALL APPROACHES OF THE INTERSECTION UNLESS INDICATED OTHERWISE ON THE PLANS. THE DETECTION SYSTEM MUST MEET THE SPECIFICATIONS OF DISTRICT 1 AND THE CONTRACTOR SHALL PLACE THE DETECTORS INTO OPERATION TO THE SATISFACTION OF THE ENGINEER.

10. WHEN PAN, TILT, ZOOM CAMERAS ARE INSTALLED AT THE EXISTING INTERSECTION OR ARE CALLED FOR IN THE PLANS, THE CONTRACTOR SHALL BE RESPONSIBLE FOR INSTALLING AND MAINTAINING THE CAMERAS TO THE SATISFACTION OF THE ENGINEER AND THE AGENCY RESPONSIBLE FOT THE CAMERAS.

• TRAFFIC SIGNAL HEADS TO BE BAGGED DURING RAILROAD CROSSING CONSTRUCTION.

NOTE
DURING SOUTH LEG OF DUGAN ROAD CONSTRUCTION DUGAN ROAD WILL BE CLOSED FOR TRAFFIC. ALL IMPACTED TRAFFIC SIGNAL HEADS SHALL BE COVERED DURING CONSTRUCTION AND THE COST WILL BE INCLUDED IN THE COST OF "TEMPORARY TRAFFIC SIGNAL INSTALLATION".

RESTORATION OF WORK AREA. RESTORATION OF THE TRAFFIC SIGNAL WORK AREA SHALL BE INCLUDED IN THE COST OF TEMPORARY TRAFFIC SIGNAL INSTALLATION AND NO EXTRA COMPENSATION SHALL BE ALLOWED. ALL ROADWAY SURFACES SUCH AS SHOULDERS, MEDIAN, SIDEWALKS, PAVEMENT ETC. SHALL BE REPLACED IN KIND. ALL DAMAGE TO MOWED LAWNS SHALL BE REPLACED WITH AN APPROVED SOD, AND ALL DAMAGE TO UNMOWED FIELDS SHALL BE SEEDED IN ACCORDANCE WITH STANDARD SPECIFICATIONS 252 AND 250 RESPECTIVELY.

NOTE
THE TRAFFIC SIGNAL CONTROLLER EQUIPMENT FOR THIS PROJECT SHALL BE "ECONOLITE" TO MATCH THE EXISTING ADJACENT SYSTEM.

I.D.O.T. TRAFFIC SIGNAL INSTALLATION ELECTRICAL SERVICE REQUIREMENTS					TOTAL WATTAGE
TYPE	NO. LAMPS X	WATTAGE X INCAND	WATTAGE X LED	% OPERATION	
SIGNAL (RED)	19		17	0.50	162
(YELLOW)	19		25	0.25	119
(GREEN)	23		15	0.25	86
ARROW	-		12	0.10	-
PED. SIGNAL	-		25	1.00	-
CONTROLLER	1		100	1.00	100
ILLUM. SIGN	4		25	0.05	5
LUMINAIRE				0.50	
FLASHER				0.50	-
				TOTAL =	472

ENERGY COST TO: ILLINOIS DEPARTMENT OF TRANSPORTATION/DISTRICT 1
201 WEST CENTER COURT, SCHAUMBURG, IL 60196-1096

ENERGY SUPPLY: CONTACT: TOM PERKINS
PHONE: 630-723-2127
COMPANY: ComEd

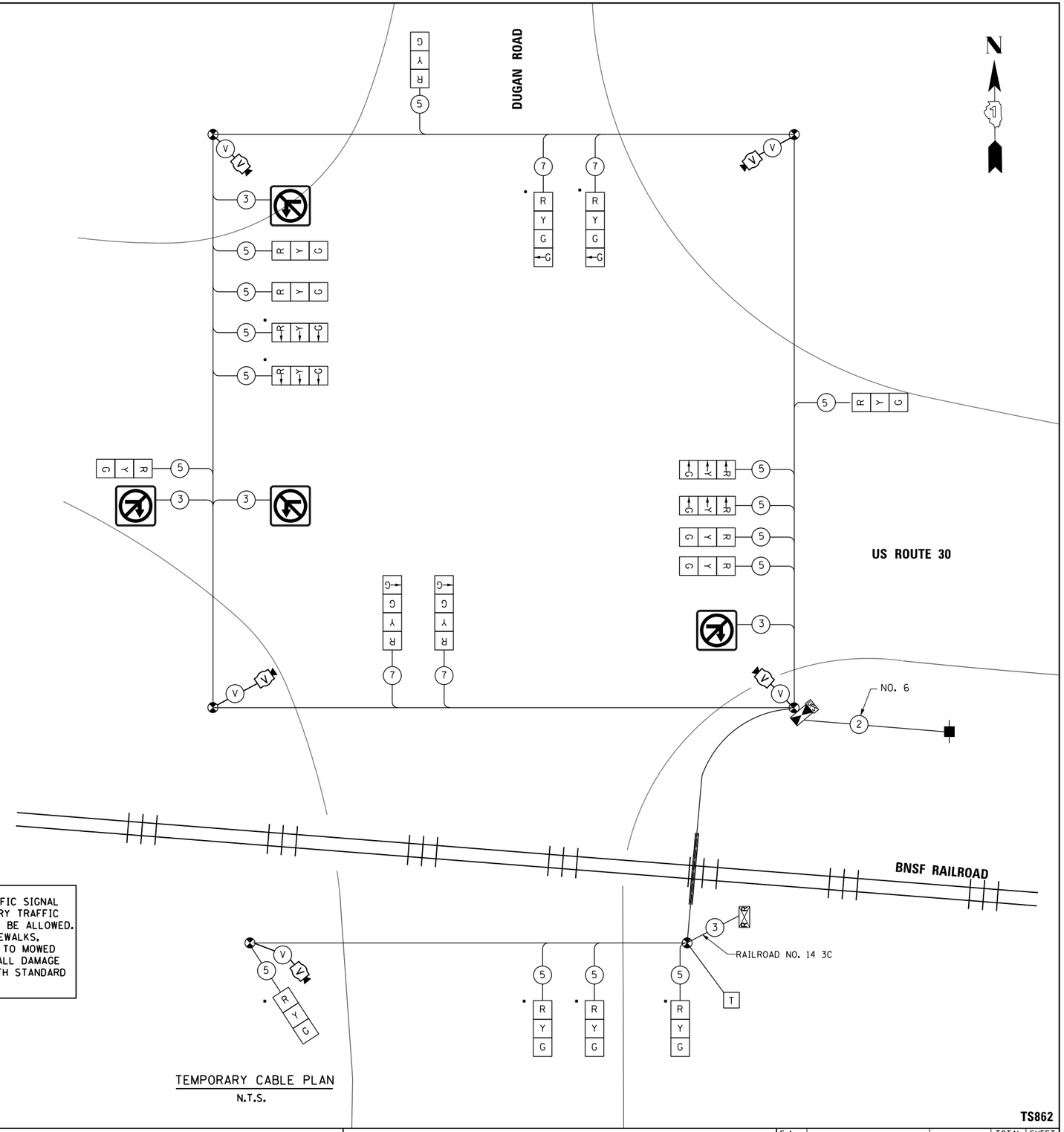

TEMPORARY CABLE PLAN
N.T.S.

TS862

AMES Engineering, Inc.
CONSULTING ENGINEERS
1341 Warren Avenue
Downers Grove, IL 60515

USER NAME = $USER$	DESIGNED - AS	REVISED -	
	DRAWN - RV	REVISED -	
PLOT SCALE = $SCALE$	CHECKED - MSA	REVISED -	
PLOT DATE = $DATE$	DATE - 10-17-14	REVISED -	

STATE OF ILLINOIS
DEPARTMENT OF TRANSPORTATION

TEMPORARY CABLE PLAN
US ROUTE 30 AND DUGAN ROAD

SCALE: NONE | SHEET NO. OF SHEETS | STA. TO STA.

F.A. RTE.	SECTION	COUNTY	TOTAL SHEETS	SHEET NO.
573	30-N (13)	KANE	219	112
		CONTRACT NO. 60X70		

FED. ROAD DIST. NO. | ILLINOIS | FED. AID PROJECT

FILE NAME = $FILE1$

TS-05

SEQUENCE OF OPERATION

MOVEMENT		5 — 1							← 6 1			5 2 →			← 6 2 →							3 3					4			FLASH
PHASE		1+5							1+6			2+5			2+6							3					4			
INTERVAL		1	2A	2B	3A	3B	4A	4B	5	6A	6B	7	8A	8B	9	10A	10B	11A	11B	12A	12B	13	14A	14B	14C	14D	15	16A	16B	
CHANGE TO			1+6		2+5		2+6			2+6			2+6			1+6		2+5		1+5 3 4			1+5 1+6 2+5 2+6 4					1+5 1+6 2+5 2+6		
US ROUTE 30 NEAR RIGHT AND 2 FAR SIGNALS	EB	R	R	R	R	R	R	R	R	R	R	G	G	G	G	Y	R	G	G	Y	R	R	R	R	R	R	R	R	R	R
US ROUTE 30 2 FAR LEFT SIGNALS	EB	◄G	◄Y	◄R	◄G	◄G	◄Y	◄R	◄R	◄R	◄R	◄G	◄Y	◄R	◄R	◄R	◄R	◄R	◄R	◄R	◄R	◄R	◄R	◄R	◄R	◄R	◄R	◄R	◄R	◄R
US ROUTE 30 NEAR RIGHT AND 2 FAR SIGNALS	WB	R	R	R	R	R	R	R	G	G	G	R	R	R	G	G	G	Y	R	Y	R	R	R	R	R	R	R	R	R	R
US ROUTE 30 2 FAR LEFT SIGNALS	WB	◄G	◄G	◄G	◄Y	◄R	◄Y	◄R	◄G	◄Y	◄R	◄R	◄R	◄R	◄R	◄R	◄R	◄R	◄R	◄R	◄R	◄R	◄R	◄R	◄R	◄R	◄R	◄R	◄R	◄R
DUGAN RD (SOUTH OF TRACK) ALL SIGNALS	NB	R	R	R	R	R	R	R	R	R	R	R	R	R	R	R	R	R	R	R	R	G	Y	R	R	R	R	R	R	R
DUGAN RD (NORTH OF TRACK) ALL FAR SIGNALS	NB	R	R	R	R	R	R	R	R	R	R	R	R	R	R	R	R	R	R	R	R	G ◄G	G ◄G	G ◄G	Y	R	R	R	R	R
DUGAN RD ALL FAR SIGNALS	SB	R	R	R	R	R	R	R	R	R	R	R	R	R	R	R	R	R	R	R	R	R	R	R	R	R	G ◄G	Y	R	R
DUGAN RD NEAR RIGHT SIGNAL	SB	R	R	R	R	R	R	R	R	R	R	R	R	R	R	R	R	R	R	R	R	R	R	R	R	R	G	Y	R	R

PHASE 2+6 SHALL BE PLACED ON RECALL

RAILROAD PREEMPTION SEQUENCE OF OPERATION

														PREEMPTOR NUMBER 2				
CHANGE FROM NORMAL SEQUENCE OF OPERATION INTERVAL NUMBER		1		5		7		9		13		15						
RAILROAD PREEMPTION SEQUENCE OF OPERATION INTERVAL NUMBER		1A	1B	1C	1D	1E	1F	1G	1H	1J	1K	1L	1M	2	3	4	5	CLEAR TO NORMAL SEQUENCE
CHANGE TO RAILROAD PREEMPTION SEQUENCE OF OPERATION INTERVAL NUMBER		1B	2	1D	2	1F	2	1H	2	1K	2	1M	2	3	4	5		
US ROUTE 30 NEAR RIGHT AND 2 FAR SIGNALS	EB	R	R	R	R	Y	R	Y	R	R	R	R	R	R	R	R	G	△
US ROUTE 30 2 FAR LEFT SIGNALS	EB	◄Y	◄R	◄R	◄R	◄Y	◄R	◄R	◄R	◄R	◄R	◄R	◄R	◄R	◄R	◄R	◄R	△
US ROUTE 30 NEAR RIGHT AND 2 FAR SIGNALS	WB	R	R	Y	R	R	R	Y	R	R	R	R	R	R	R	R	G	△
US ROUTE 30 2 FAR LEFT SIGNALS	WB	◄Y	◄R	◄Y	◄R	◄R	◄R	◄R	◄R	◄R	◄R	◄R	◄R	◄R	◄R	◄R	◄R	△
DUGAN RD (SOUTH OF TRACK) ALL SIGNALS	NB	R	R	R	R	R	R	R	R	Y	R	R	R	R	R	R	R	△
DUGAN RD (NORTH OF TRACK) ALL FAR SIGNALS	NB	R	R	R	R	R	R	R	R	G ◄G	G ◄G	R	R	G ◄G	Y	R	R	△
DUGAN RD ALL FAR SIGNALS	SB	R	R	R	R	R	R	R	R	R	R	Y	R	R	R	R	R	△
DUGAN RD NEAR RIGHT SIGNAL	SB	R	R	R	R	R	R	R	R	R	R	Y	R	R	R	R	R	△
INTERNALLY ILLUMINATED NO RIGHT TURN SIGNS		NRT	NRT	NRT	NRT	NRT	NRT	NRT	NRT	NRT	NRT	NRT	NRT	NRT	NRT	NRT	NRT	△
INTERNALLY ILLUMINATED NO LEFT TURN SIGNS		NLT	NLT	NLT	NLT	NLT	NLT	NLT	NLT	NLT	NLT	NLT	NLT	NLT	NLT	NLT	NLT	△
																	HOLD	

△ RAILROAD PREEMPTION SEQUENCE SHALL PROVIDE THE PROPER CLEARANCE INTERVAL TO RESUME THE NORMAL SEQUENCE OF OPERATION AFTER RAILROAD PREEMPTION INTERVAL 5 IS TERMINATED.

NRT= NO RIGHT TURN (LED SIGN)

R3-1

NLT= NO LEFT TURN (LED SIGN)

R3-1

TS862

FILE NAME = $FILEL$

AMES Engineering, Inc.
CONSULTING ENGINEERS
1341 Warren Avenue
Downers Grove, IL 60515

USER NAME = $USER$	DESIGNED - AS	REVISED -	
	DRAWN - RV	REVISED -	
PLOT SCALE = $SCALE$	CHECKED - MSA	REVISED -	
PLOT DATE = $DATE$	DATE - 10-17-14	REVISED -	

STATE OF ILLINOIS
DEPARTMENT OF TRANSPORTATION

TEMPORARY SEQUENCE OF OPERATION & RAILROAD PREEMPTION SEQUENCE OF OPERATION
US ROUTE 30 AND DUGAN ROAD

SCALE: NONE | SHEET NO. OF SHEETS | STA. TO STA.

F.A. RTE.	SECTION	COUNTY	TOTAL SHEETS	SHEET NO.
573	30-N (13)	KANE	219	113
		CONTRACT NO. 60X70		

FED. ROAD DIST. NO. | ILLINOIS | FED. AID PROJECT

TS–06

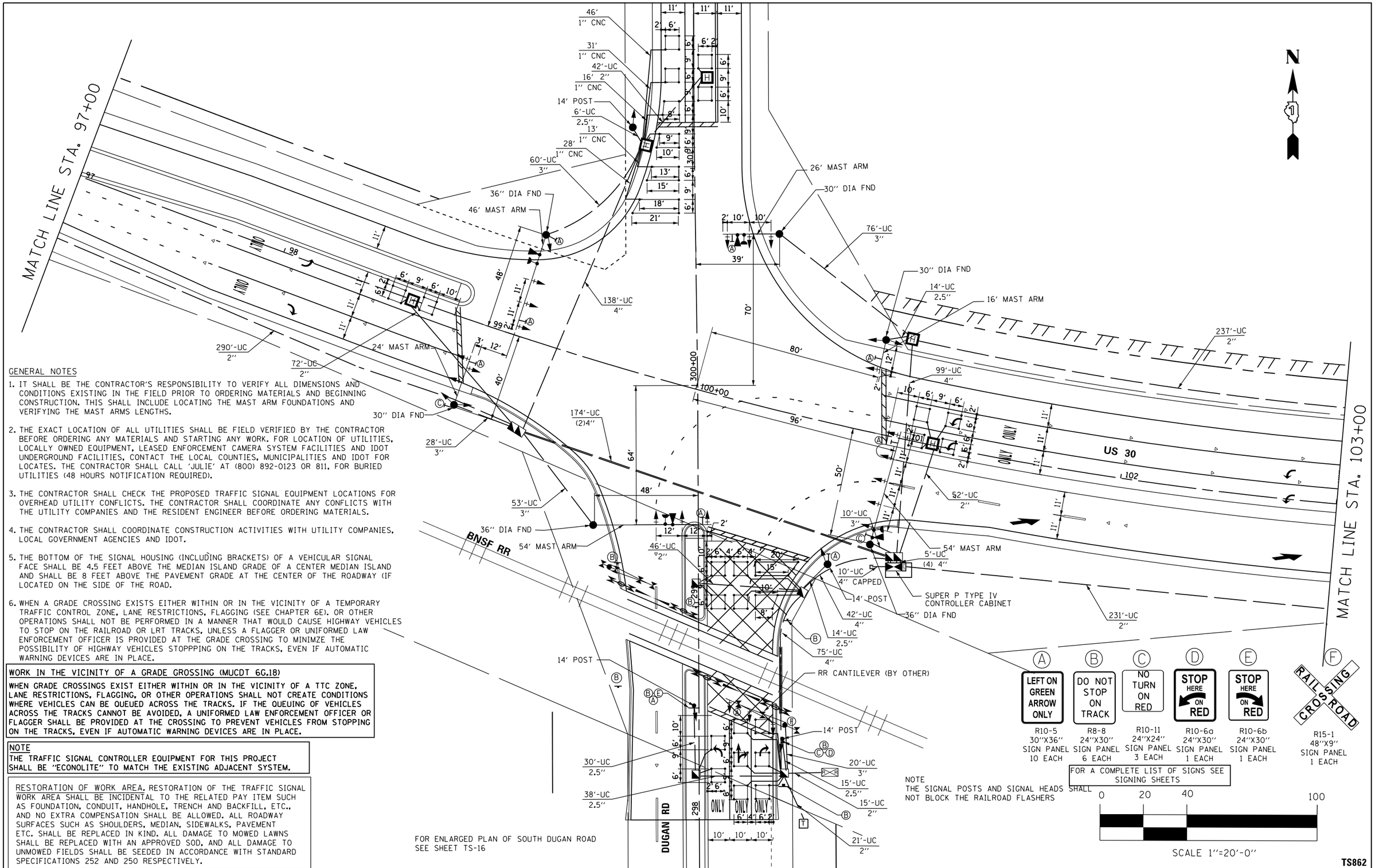

GENERAL NOTES

1. IT SHALL BE THE CONTRACTOR'S RESPONSIBILITY TO VERIFY ALL DIMENSIONS AND CONDITIONS EXISTING IN THE FIELD PRIOR TO ORDERING MATERIALS AND BEGINNING CONSTRUCTION. THIS SHALL INCLUDE LOCATING THE MAST ARM FOUNDATIONS AND VERIFYING THE MAST ARMS LENGTHS.

2. THE EXACT LOCATION OF ALL UTILITIES SHALL BE FIELD VERIFIED BY THE CONTRACTOR BEFORE ORDERING ANY MATERIALS AND STARTING ANY WORK. FOR LOCATION OF UTILITIES, LOCALLY OWNED EQUIPMENT, LEASED ENFORCEMENT CAMERA SYSTEM FACILITIES AND IDOT UNDERGROUND FACILITIES, CONTACT THE LOCAL COUNTIES, MUNICIPALITIES AND IDOT FOR LOCATES. THE CONTRACTOR SHALL CALL 'JULIE' AT (800) 892-0123 OR 811, FOR BURIED UTILITIES (48 HOURS NOTIFICATION REQUIRED).

3. THE CONTRACTOR SHALL CHECK THE PROPOSED TRAFFIC SIGNAL EQUIPMENT LOCATIONS FOR OVERHEAD UTILITY CONFLICTS. THE CONTRACTOR SHALL COORDINATE ANY CONFLICTS WITH THE UTILITY COMPANIES AND THE RESIDENT ENGINEER BEFORE ORDERING MATERIALS.

4. THE CONTRACTOR SHALL COORDINATE CONSTRUCTION ACTIVITIES WITH UTILITY COMPANIES, LOCAL GOVERNMENT AGENCIES AND IDOT.

5. THE BOTTOM OF THE SIGNAL HOUSING (INCLUDING BRACKETS) OF A VEHICULAR SIGNAL FACE SHALL BE 4.5 FEET ABOVE THE MEDIAN ISLAND GRADE OF A CENTER MEDIAN ISLAND AND SHALL BE 8 FEET ABOVE THE PAVEMENT GRADE AT THE CENTER OF THE ROADWAY (IF LOCATED ON THE SIDE OF THE ROAD.

6. WHEN A GRADE CROSSING EXISTS EITHER WITHIN OR IN THE VICINITY OF A TEMPORARY TRAFFIC CONTROL ZONE, LANE RESTRICTIONS, FLAGGING (SEE CHAPTER 6E). OR OTHER OPERATIONS SHALL NOT BE PERFORMED IN A MANNER THAT WOULD CAUSE HIGHWAY VEHICLES TO STOP ON THE RAILROAD OR LRT TRACKS, UNLESS A FLAGGER OR UNIFORMED LAW ENFORCEMENT OFFICER IS PROVIDED AT THE GRADE CROSSING TO MINIMZE THE POSSIBILITY OF HIGHWAY VEHICLES STOPPPING ON THE TRACKS, EVEN IF AUTOMATIC WARNING DEVICES ARE IN PLACE.

WORK IN THE VICINITY OF A GRADE GROSSING (MUCDT 6G.18)

WHEN GRADE CROSSINGS EXIST EITHER WITHIN OR IN THE VICINITY OF A TTC ZONE, LANE RESTRICTIONS, FLAGGING, OR OTHER OPERATIONS SHALL NOT CREATE CONDITIONS WHERE VEHICLES CAN BE QUEUED ACROSS THE TRACKS. IF THE QUEUING OF VEHICLES ACROSS THE TRACKS CANNOT BE AVOIDED, A UNIFORMED LAW ENFORCEMENT OFFICER OR FLAGGER SHALL BE PROVIDED AT THE CROSSING TO PREVENT VEHICLES FROM STOPPING ON THE TRACKS, EVEN IF AUTOMATIC WARNING DEVICES ARE IN PLACE.

NOTE
THE TRAFFIC SIGNAL CONTROLLER EQUIPMENT FOR THIS PROJECT SHALL BE "ECONOLITE" TO MATCH THE EXISTING ADJACENT SYSTEM.

RESTORATION OF WORK AREA. RESTORATION OF THE TRAFFIC SIGNAL WORK AREA SHALL BE INCIDENTAL TO THE RELATED PAY ITEM SUCH AS FOUNDATION, CONDUIT, HANDHOLE, TRENCH AND BACKFILL, ETC., AND NO EXTRA COMPENSATION SHALL BE ALLOWED. ALL ROADWAY SURFACES SUCH AS SHOULDERS, MEDIAN, SIDEWALKS, PAVEMENT ETC. SHALL BE REPLACED IN KIND. ALL DAMAGE TO MOWED LAWNS SHALL BE REPLACED WITH AN APPROVED SOD, AND ALL DAMAGE TO UNMOWED FIELDS SHALL BE SEEDED IN ACCORDANCE WITH STANDARD SPECIFICATIONS 252 AND 250 RESPECTIVELY.

TS862

FILE NAME = F:\Projects\1023 US 30-H R Green\Design\Sht\11-P-TS Plan.dgn

AMES Engineering, Inc.
CONSULTING ENGINEERS
1341 Warren Avenue
Downers Grove, IL 60515

USER NAME = Vramesh	DESIGNED - AS	REVISED -	
	DRAWN - RV	REVISED -	
PLOT SCALE = 40.0000 ' / in.	CHECKED - MSA	REVISED -	
PLOT DATE = 10/17/2014	DATE - 10-17-14	REVISED -	

STATE OF ILLINOIS
DEPARTMENT OF TRANSPORTATION

TRAFFIC SIGNAL INSTALLATION PLAN – SHEET 1 OF 2
US 30 AND DUGAN ROAD

SCALE: | SHEET NO. OF SHEETS | STA. TO STA.

F.A. RTE.	SECTION	COUNTY	TOTAL SHEETS	SHEET NO.
573	30-N (13)	KANE	219	114
		CONTRACT NO. 60X70		

FED. ROAD DIST. NO. | ILLINOIS | FED. AID PROJECT

TS–07

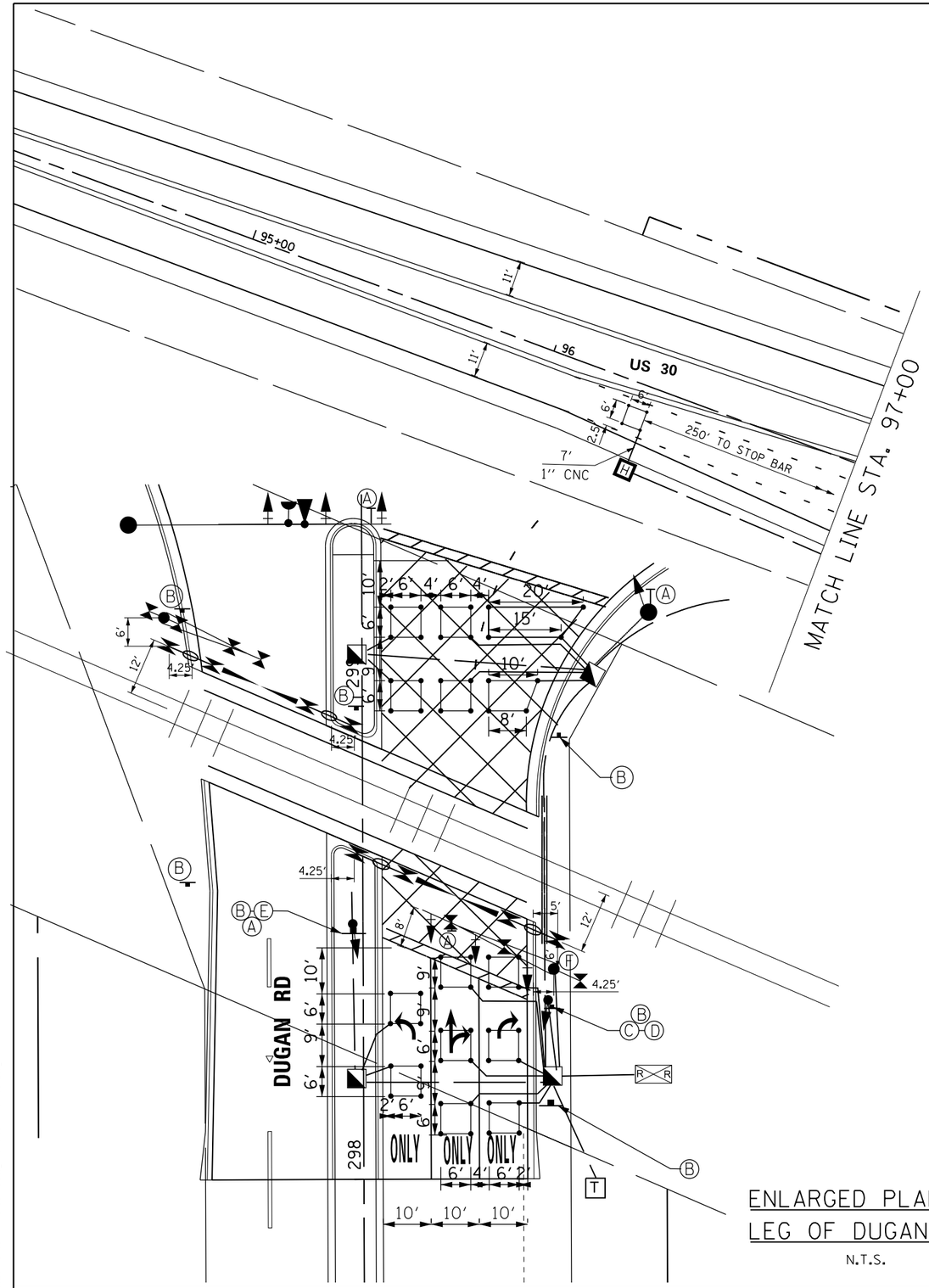

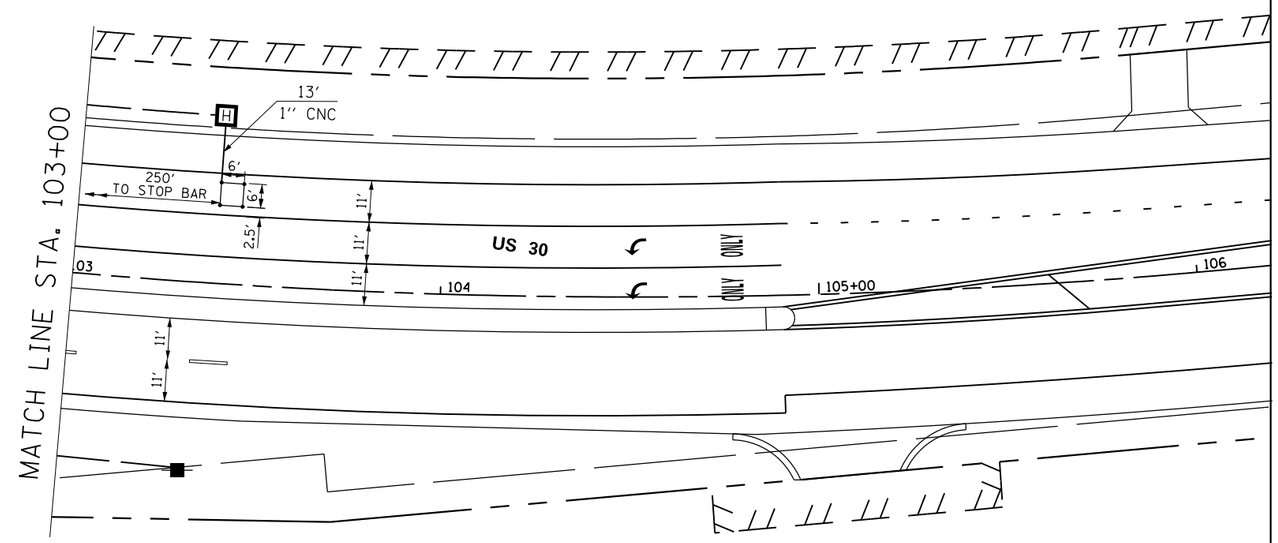

N

ENLARGED PLAN OF SOUTH LEG OF DUGAN ROAD

N.T.S.

0 20 40 100

SCALE 1''=20'-0''

TS862

AMES Engineering, Inc. CONSULTING ENGINEERS 1341 Warren Avenue Downers Grove, IL 60515	USER NAME = Vramesh	DESIGNED - AS	REVISED -
		DRAWN - RV	REVISED -
	PLOT SCALE = 40.0000 ' / in.	CHECKED - MSA	REVISED -
	PLOT DATE = 10/17/2014	DATE - 10-17-14	REVISED -

STATE OF ILLINOIS
DEPARTMENT OF TRANSPORTATION

TRAFFIC SIGNAL INSTALLATION PLAN – SHEET 2 OF 2
US 30 AND DUGAN ROAD

SCALE: | SHEET NO. OF SHEETS | STA. TO STA.

F.A. RTE.	SECTION	COUNTY	TOTAL SHEETS	SHEET NO.
573	30-N (13)	KANE	219	115
		CONTRACT NO. 60X70		
FED. ROAD DIST. NO.	ILLINOIS	FED. AID PROJECT		

FILE NAME = F:\Projects\1023 US 30-H R Green\Design\Sht\12-P-TS Plan2.dgn

TS–08

SCHEDULE OF QUANTITY

CODE	ITEM	UNIT	QUANTITY
72000100	SIGN PANEL - TYPE 1	SQ FT	130
80500020	SERVICE INSTALLATION - POLE MOUNTED	EACH	1
81028200	UNDERGROUND CONDUIT, GALVANIZED STEEL, 2" DIA.	FOOT	1006
81028210	UNDERGROUND CONDUIT, GALVANIZED STEEL, 2 1/2" DIA.	FOOT	110
81028220	UNDERGROUND CONDUIT, GALVANIZED STEEL, 3" DIA.	FOOT	244
81028240	UNDERGROUND CONDUIT, GALVANIZED STEEL, 4" DIA.	FOOT	732
81400100	HANDHOLE	EACH	4
81400200	HEAVY-DUTY HANDHOLE	EACH	7
81400300	DOUBLE HANDHOLE	EACH	2
87301225	ELECTRIC CABLE IN CONDUIT, SIGNAL NO. 14 3C	FOOT	1222
87301245	ELECTRIC CABLE IN CONDUIT, SIGNAL NO. 14 5C	FOOT	8015
87301305	ELECTRIC CABLE IN CONDUIT, LEAD-IN, NO. 14 1 PAIR	FOOT	2912
87301750	ELECTRIC CABLE IN CONDUIT, RAILROAD NO. 14 3C	FOOT	180
87301805	ELECTRIC CABLE IN CONDUIT, SERVICE, NO. 6 2 C	FOOT	280
87301900	ELECTRIC CABLE IN CONDUIT, EQUIPMENT GROUNDING CONDUCTOR, NO. 6 1C	FOOT	1528
87502480	TRAFFIC SIGNAL POST, GALVANIZED STEEL 14 FT.	EACH	4
87700120	STEEL MAST ARM ASSEMBLY AND POLE, 16 FT.	EACH	1
87700160	STEEL MAST ARM ASSEMBLY AND POLE, 24 FT.	EACH	1
87700170	STEEL MAST ARM ASSEMBLY AND POLE, 26 FT.	EACH	1
87700270	STEEL MAST ARM ASSEMBLY AND POLE, 46 FT.	EACH	1
87700310	STEEL MAST ARM ASSEMBLY AND POLE, 54 FT.	EACH	2
87800100	CONCRETE FOUNDATION, TYPE A	FOOT	16
87800150	CONCRETE FOUNDATION, TYPE C	FOOT	4
87800400	CONCRETE FOUNDATION, TYPE E 30-INCH DIAMETER	FOOT	30
87800415	CONCRETE FOUNDATION, TYPE E 36-INCH DIAMETER	FOOT	43
88030020	SIGNAL HEAD, LED, 1-FACE, 3-SECTION, MAST-ARM MOUNTED	EACH	21
88030050	SIGNAL HEAD, LED, 1-FACE, 3-SECTION, BRACKET MOUNTED	EACH	6
88030210	SIGNAL HEAD, LED, 2-FACE, 3-SECTION, BRACKET MOUNTED	EACH	1
88200210	TRAFFIC SIGNAL BACKPLATE, LOUVERED, ALUMINUM	EACH	21
88500100	INDUCTIVE LOOP DETECTOR	EACH	13
88600100	DETECTOR LOOP, TYPE 1	FOOT	1103
• 88700200	LIGHT DETECTOR	EACH	4
• 88700300	LIGHT DETECTOR AMPLIFIER	EACH	1
89000100	TEMPORARY TRAFFIC SIGNAL INSTALLATION	EACH	1
89502375	REMOVE EXISTING TRAFFIC SIGNAL EQUIPMENT	EACH	1
89502380	REMOVE EXISTING HANDHOLE	EACH	13
89502385	REMOVE EXISTING CONCRETE FOUNDATION	EACH	11
• X0324085	EMERGENCY VEHICLE PRIORITY SYSTEM LINE SENSOR CABLE, NO. 20 3/C	FOOT	1222
X8571215	RAILROAD, FULL-ACTUATED CONTROLLER AND TYPE IV CABINET,SPECIAL	EACH	1
X8620200	UNINTERRUPTABLE POWER SUPPLY, SPECIAL	EACH	1
Z0048665	RAILROAD PROTECTIVE LIABILITY INSURANCE	L SUM	1
Z0067100	STEEL CASINGS 8"	FOOT	30

• 100% COST TO VILLAGE OF SUGAR GROVE

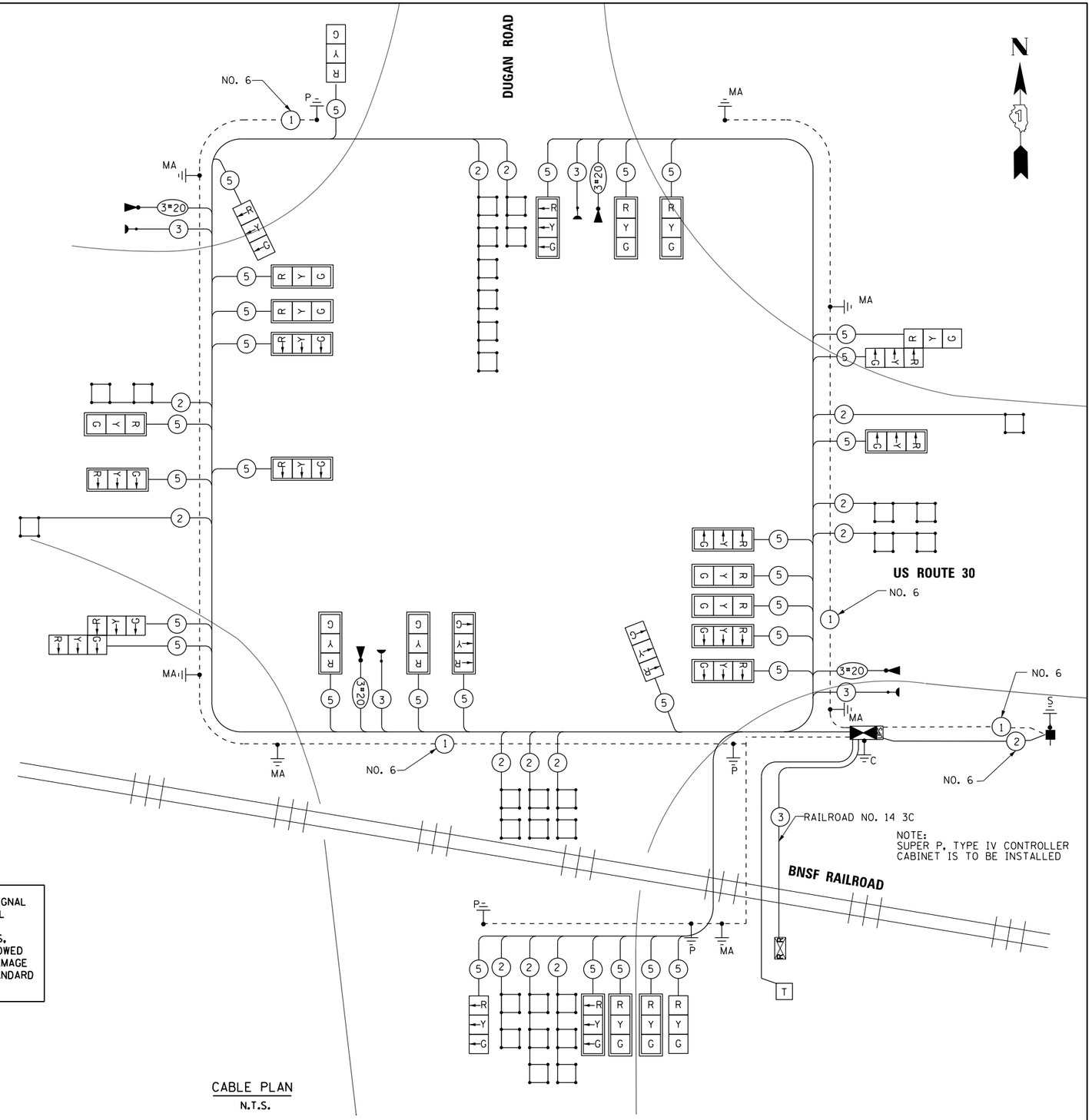

CABLE PLAN
N.T.S.

I.D.O.T. TRAFFIC SIGNAL INSTALLATION ELECTRICAL SERVICE REQUIREMENTS					TOTAL WATTAGE
TYPE	NO. LAMPS ×	WATTAGE INCAND	WATTAGE LED	× % OPERATION	
SIGNAL (RED)	30		17	0.50	255
(YELLOW)	30		25	0.25	188
(GREEN)	30		15	0.25	112
ARROW	-		12	0.10	-
PED. SIGNAL	-		25	1.00	-
CONTROLLER	1		100	1.00	100
ILLUM. SIGN	-		25	0.05	-
LUMINAIRE				0.50	
FLASHER				0.50	-
				TOTAL =	655

ENERGY COST TO: ILLINOIS DEPARTMENT OF TRANSPORTATION/DISTRICT 1
201 WEST CENTER COURT, SCHAUMBURG, IL 60196-1096

ENERGY SUPPLY: CONTACT: TOM PERKINS
PHONE: 630-723-2127
COMPANY: ComEd

RESTORATION OF WORK AREA. RESTORATION OF THE TRAFFIC SIGNAL WORK AREA SHALL BE INCIDENTAL TO TEMPORARY TRAFFIC SIGNAL INSTALLATION AND NO EXTRA COMPENSATION SHALL BE ALLOWED. ALL ROADWAY SURFACES SUCH AS SHOULDERS, MEDIAN, SIDEWALKS, PAVEMENT ETC. SHALL BE REPLACED IN KIND. ALL DAMAGE TO MOWED LAWNS SHALL BE REPLACED WITH AN APPROVED SOD, AND ALL DAMAGE TO UNMOWED FIELDS SHALL BE SEEDED IN ACCORDANCE WITH STANDARD SPECIFICATIONS 252 AND 250 RESPECTIVELY.

NOTE
THE TRAFFIC SIGNAL CONTROLLER EQUIPMENT FOR THIS PROJECT SHALL BE "ECONOLITE" TO MATCH THE EXISTING ADJACENT SYSTEM.

TS862

FILE NAME = $FILEL$

AMES Engineering, Inc.
CONSULTING ENGINEERS
1341 Warren Avenue
Downers Grove, IL 60515

USER NAME = $USER$	DESIGNED - AS	REVISED -
	DRAWN - RV	REVISED -
PLOT SCALE = $SCALE$	CHECKED - MSA	REVISED -
PLOT DATE = $DATE$	DATE - 10-17-14	REVISED -

STATE OF ILLINOIS
DEPARTMENT OF TRANSPORTATION

CABLE PLAN AND SCHEDULE OF QUANTITIES
US ROUTE 30 AND DUGAN ROAD

SCALE: NONE | SHEET NO. OF SHEETS | STA. TO STA.

F.A. RTE.	SECTION	COUNTY	TOTAL SHEETS	SHEET NO.
573	30-N (13)	KANE	219	116
		CONTRACT NO. 60X70		
FED. ROAD DIST. NO.	ILLINOIS	FED. AID PROJECT		

TS–09

SEQUENCE OF OPERATION

MOVEMENT N									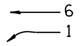			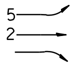			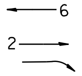					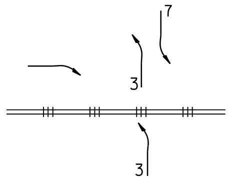															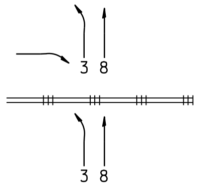									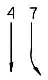							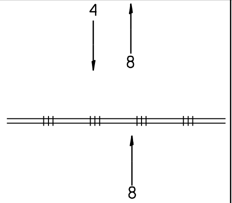					FLASH
PHASE		1+5							1+6			2+5			2+6					3+7															3+8									4+7							4+8					
INTERVAL		1	2A	2B	3A	3B	4A	4B	5	6A	6B	7	8A	8B	9	10A	10B	11A	11B	12	13A	13B	13C	13D	14A	14B	15A	15B	15C	15D	16A	16B	16C	16D	17	18A	18B	18C	18D	19A	19B	19C	19D	20	21A	21B	21C	21D	22A	22B	23	24A	24B	24C	24D	
CHANGE TO			1+6		2+5		2+6			2+6			2+6			1+5 1+6 2+5		3+7 3+8 4+7 4+8			1+5 1+6 2+5 2+6				3+8		4+7				4+8					1+5 1+6 2+5 2+6				4+8					1+5 1+6 2+5 2+6				4+8			1+5 1+6 2+5 2+6				
US ROUTE 30 2-FAR LEFT & FAR END MAST ARM SIGNALS	EB	◄G	◄Y	◄R	◄G	◄G	◄Y	◄R	◄R	◄R	◄R	◄G	◄Y	◄R	◄R	◄R	◄R	◄R	◄R	◄R	◄R	◄R	◄R	◄R	◄R	◄R	◄R	◄R	◄R	◄R	◄R	◄R	◄R	◄R	◄R	◄R	◄R	◄R	◄R	◄R	◄R	◄R	◄R	◄R	◄R	◄R	◄R	◄R	◄R	◄R	◄R	◄R	◄R	◄R	◄R	◄R
US ROUTE 30 - NEAR END MAST ARM & 2 FAR MIDDLE MAST ARM SIGNALS	EB	R	R	R	R	R	R	R	R	R	R	G	G	G	G	Y	R	Y	R	R	R	R	R	R	R	R	R	R	R	R	R	R	R	R	R	R	R	R	R	R	R	R	R	R	R	R	R	R	R	R	R	R	R	R	R	R
US ROUTE 30 - 2-FAR RIGHT MAST ARM, NEAR MIDDLE MAST ARM & NEAR RIGHT SIGNALS	EB	R►	R►	R►	R►	R►	R►	R►	R►	R►	R►	G►	G►	G►	G►	Y►	R►	Y►	R►	G►	G►	G►	Y►	R►	G►	G►	G►	G►	Y►	R►	G►	G►	Y►	R►	G►	G►	G►	Y►	R►	G►	G►	Y►	R►	R►	R►	R►	R►	R►	R►	R►	R►	R►	R►	R►	R►	R►
US ROUTE 30 2-FAR LEFT & END MAST ARM SIGNALS	WB	◄G	◄G	◄G	◄Y	◄R	◄Y	◄R	◄G	◄Y	◄R	◄R	◄R	◄R	◄R	◄R	◄R	◄R	◄R	◄R	◄R	◄R	◄R	◄R	◄R	◄R	◄R	◄R	◄R	◄R	◄R	◄R	◄R	◄R	◄R	◄R	◄R	◄R	◄R	◄R	◄R	◄R	◄R	◄R	◄R	◄R	◄R	◄R	◄R	◄R	◄R	◄R	◄R	◄R	◄R	◄R
US ROUTE 30 - NEAR RIGHT, FAR MIDDLE & RIGHT MAST ARM SIGNALS	WB	R	R	R	R	R	R	R	G	G	G	R	R	R	G	Y	R	Y	R	R	R	R	R	R	R	R	R	R	R	R	R	R	R	R	R	R	R	R	R	R	R	R	R	R	R	R	R	R	R	R	R	R	R	R	R	R
DUGAN RD (NORTH OF TRACK) FAR LEFT & END MAST ARM SIGNALS	NB	◄R	◄R	◄R	◄R	◄R	◄R	◄R	◄R	◄R	◄R	◄R	◄R	◄R	◄R	◄R	◄R	◄R	◄R	◄G	◄G	◄G	◄Y	◄R	◄G	◄G	◄G	◄G	◄Y	◄R	◄G	◄G	◄Y	◄R	◄G	◄G	◄G	◄Y	◄R	◄G	◄G	◄Y	◄R	◄R	◄R	◄R	◄R	◄R	◄R	◄R	◄R	◄R	◄R	◄R	◄R	◄R
DUGAN RD (NORTH OF TRACK) FAR MIDDLE & RIGHT MAST ARM SIGNALS	NB	R	R	R	R	R	R	R	R	R	R	R	R	R	R	R	R	R	R	R	R	R	R	R	R	R	R	R	R	R	R	R	R	R	G	G	G	Y	R	G	G	G	G	R	R	R	R	R	R	R	G	G	G	Y	R	R
DUGAN RD (SOUTH OF TRACK) NEAR LEFT & END MAST ARM SIGNALS	NB	◄R	◄R	◄R	◄R	◄R	◄R	◄R	◄R	◄R	◄R	◄R	◄R	◄R	◄R	◄R	◄R	◄R	◄R	◄G	◄Y	◄R	◄R	◄R	◄G	◄G	◄Y	◄R	◄R	◄R	◄Y	◄R	◄R	◄R	◄G	◄Y	◄R	◄R	◄R	◄Y	◄R	◄R	◄R	◄R	◄R	◄R	◄R	◄R	◄R	◄R	◄R	◄R	◄R	◄R	◄R	◄R
DUGAN RD (SOUTH OF TRACK) - NEAR RIGHT, MIDDLE & RIGHT MAST ARM SIGNALS	NB	R	R	R	R	R	R	R	R	R	R	R	R	R	R	R	R	R	R	R	R	R	R	R	R	R	R	R	R	R	R	R	R	R	G	Y	R	R	R	G	G	G	G	R	R	R	R	R	R	R	G	Y	R	R	R	R
DUGAN RD FAR LEFT & END MAST ARM SIGNALS	SB	◄R	◄R	◄R	◄R	◄R	◄R	◄R	◄R	◄R	◄R	◄R	◄R	◄R	◄R	◄R	◄R	◄R	◄R	◄G	◄Y	◄R	◄R	◄R	◄Y	◄R	◄G	◄G	◄G	◄G	◄Y	◄R	◄R	◄R	◄R	◄R	◄R	◄R	◄R	◄R	◄R	◄R	◄R	◄G	◄Y	◄R	◄R	◄R	◄Y	◄R	◄R	◄R	◄R	◄R	◄R	◄R
DUGAN RD - NEAR RIGHT, FAR MIDDLE & RIGHT MAST ARM SIGNALS	SB	R	R	R	R	R	R	R	R	R	R	R	R	R	R	R	R	R	R	R	R	R	R	R	R	R	R	R	R	R	R	R	R	R	R	R	R	R	R	R	R	R	R	G	Y	R	R	R	G	G	G	G	G	Y	R	R

PHASE 2+6 SHALL BE PLACED ON RECALL

RAILROAD PREEMPTION SEQUENCE OF OPERATION

																		PREEMPTOR NUMBER 3		PREEMPTOR NUMBER 4		PREEMPTOR NUMBER 5		PREEMPTOR NUMBER 6		PREEMPTOR NUMBER 2				
CHANGE FROM NORMAL SEQUENCE OF OPERATION INTERVAL NUMBER		1		5		7		9		12		17		20		23														
CHANGE FORM EMERGENCY VEHICLE PREEMPTION SEQUENCE OF OPERATION INTERVAL NUMBER																		2		3		4		5						
RAILROAD PREEMPTION SEQUENCE OF OPERATION INTERVAL NUMBER		1A	1B	1C	1D	1E	1F	1G	1H	1J	1K	1L	1M	1N	1P	1Q	1R	1S	1T	1U	1V	1W	1X	1Y	1Z	2	3	4	5	CLEAR TO NORMAL SEQUENCE
CHANGE TO RAILROAD PREEMPTION SEQUENCE OF OPERATION INTERVAL NUMBER		1B	2	1D	2	1F	2	1H	2	1K	2	1M	2	1P	2	1R	2	1T	2	1V	2	1X	2	1Z	2	3	4	5		
US ROUTE 30 2-FAR LEFT & FAR END MAST ARM SIGNALS	EB	◄Y	◄R	◄R	◄R	◄Y	◄R	◄R	◄R	◄R	◄R	◄R	◄R	◄R	◄R	◄R	◄R	◄Y	◄R	◄R	◄R	◄R	◄R	◄R	◄R	◄R	◄R	◄R	◄R	△
US ROUTE 30 - NEAR END MAST ARM & 2 FAR MIDDLE MAST ARM SIGNALS	EB	R	R	R	R	Y	R	Y	R	R	R	R	R	R	R	R	R	Y	R	R	R	R	R	R	R	R	R	R	G	△
US ROUTE 30 - 2-FAR RIGHT MAST ARM, NEAR MIDDLE MAST ARM & NEAR RIGHT SIGNALS	EB	R►	R►	R►	R►	Y►	R►	Y►	R►	Y►	R►	Y►	R►	R►	R►	R►	R►	Y►	R►	R►	R►	R►	R►	R►	R►	R►	R►	R►	R►	△
US ROUTE 30 2-FAR LEFT & END MAST ARM SIGNALS	WB	◄Y	◄R	◄Y	◄R	◄R	◄R	◄R	◄R	◄R	◄R	◄R	◄R	◄R	◄R	◄R	◄R	◄R	◄R	◄R	◄R	◄Y	◄R	◄R	◄R	◄R	◄R	◄R	◄R	△
US ROUTE 30 - NEAR RIGHT, FAR MIDDLE & RIGHT MAST ARM SIGNALS	WB	R	R	Y	R	R	R	Y	R	R	R	R	R	R	R	R	R	R	R	R	R	Y	R	R	R	R	R	R	G	△
DUGAN RD (NORTH OF TRACK) FAR LEFT & END MAST ARM SIGNALS	NB	◄R	◄R	◄R	◄R	◄R	◄R	◄R	◄R	◄G	◄G	◄G	◄G	◄R	◄R	◄R	◄R	◄R	◄R	◄R	◄R	◄R	◄R	◄G	◄G	◄G	◄Y	◄R	◄R	△
DUGAN RD (NORTH OF TRACK) FAR MIDDLE & RIGHT MAST ARM SIGNALS	NB	R	R	R	R	R	R	R	R	R	R	G	G	R	R	G	G	R	R	R	R	R	R	G	G	G	Y	R	R	△
DUGAN RD (SOUTH OF TRACK) NEAR LEFT & END MAST ARM SIGNALS	NB	◄R	◄R	◄R	◄R	◄R	◄R	◄R	◄R	◄Y	◄R	◄Y	◄R	◄R	◄R	◄R	◄R	◄R	◄R	◄R	◄R	◄R	◄R	◄Y	◄R	◄R	◄R	◄R	◄R	△
DUGAN RD (SOUTH OF TRACK) - NEAR RIGHT, MIDDLE & RIGHT MAST ARM SIGNALS	NB	R	R	R	R	R	R	R	R	R	R	Y	R	R	R	Y	R	R	R	R	R	R	R	Y	R	R	R	R	R	△
DUGAN RD FAR LEFT & END MAST ARM SIGNALS	SB	◄R	◄R	◄R	◄R	◄R	◄R	◄R	◄R	◄Y	◄R	◄R	◄R	◄Y	◄R	◄R	◄R	◄R	◄R	◄Y	◄R	◄R	◄R	◄R	◄R	◄R	◄R	◄R	◄R	△
DUGAN RD - NEAR RIGHT, FAR MIDDLE & RIGHT MAST ARM SIGNALS	SB	R	R	R	R	R	R	R	R	R	R	R	R	Y	R	Y	R	R	R	Y	R	R	R	R	R	R	R	R	R	△
																												HOLD	

△ RAILROAD PREEMPTION SEQUENCE SHALL PROVIDE THE PROPER CLEARANCE INTERVAL TO RESUME THE NORMAL SEQUENCE OF OPERATION OR PROPER CLEARANCE INTERVAL TO DISPLAY AN EMERGENCY VEHICLE INTERVAL (IF APPLICABLE) AFTER RAILROAD PREEMPTION INTERVAL 5 IS TERMINATED.

TS862

AMES Engineering, Inc.
CONSULTING ENGINEERS
1341 Warren Avenue
Downers Grove, IL 60515

USER NAME = $USER$
PLOT SCALE = $SCALE$
PLOT DATE = $DATE$

DESIGNED	- AS
DRAWN	- RV
CHECKED	- MSA
DATE	- 10-17-14

REVISED -
REVISED -
REVISED -
REVISED -

STATE OF ILLINOIS
DEPARTMENT OF TRANSPORTATION

SEQUENCE OF OPERATION & RAILROAD PREEMPTION SEQUEMCE OF OPERATION
US ROUTE 30 AND DUGAN ROAD

SCALE: NONE SHEET NO. OF SHEETS STA. TO STA.

F.A. RTE.	SECTION	COUNTY	TOTAL SHEETS	SHEET NO.
573	30-N (13)	KANE	219	117
		CONTRACT NO. 60X70		
FED. ROAD DIST. NO.	ILLINOIS	FED. AID PROJECT		

FILE NAME = $FILEL$

TS-10

EMERGENCY VEHICLE PREEMPTION SEQUENCE OF OPERATION

CHANGE FROM NORMAL SEQUENCE OF OPERATION INTERVAL NUMBER	1	1	1	5	5	7	7	9	9	9	12	12	12	12	17	17	20	20	23	23	23
EMERGENCY VEHICLE PREEMPTION SEQUENCE OF OPERATION INTERVAL NUMBER	1A 1B	1C 1D	1E 1F	1G 1H	1J 1K	1L 1M	1N 1P	1Q 1R	1S 1T	1U 1V 1W 1X	1Y 1Z 1AA 1BB	1CC 1DD 1EE 1FF	1GG 1HH	1JJ 1KK 1LL 1MM	1NN 1PP	1QQ 1RR	1SS	1TT 1UU 1VV 1WW	1XX 1YY 1ZZ 1ZA	1ZB 1ZC
CHANGE TO EMERGENCY VEHICLE PREEMPTION SEQUENCE OF OPERATION INTERVAL NUMBER	1B 2	1D 3 OR 5	1F 4	1H 2, 3 OR 5	4 2	1M 3, 4 OR 5	1P 2	1R 3 OR 5	1T 4	1V 1W 1X 2	1Y 1Z 1BB 3	1DD 1EE 1FF 4	1HH 5	1KK 1LL 1MM 2, 3 OR 4	1PP 5	1RR 2, 4 OR 5	3	1UU 1VV 1WW 2, OR 4	1YY 1ZZ 1ZA 3	1ZC 5
US ROUTE 30 2-FAR LEFT & FAR END MAST ARM SIGNALS EB	◄-G ◄-G	◄-Y ◄-R	◄-Y ◄-R	◄-R ◄-R	◄-R ◄-G	◄-Y ◄-R	◄-R ◄-R	◄-R ◄-R	◄-R ◄-R	◄-R ◄-R ◄-R ◄-R	◄-R ◄-R ◄-R ◄-R	◄-R ◄-R ◄-R ◄-R	◄-R ◄-R	◄-R ◄-R ◄-R ◄-R	◄-R ◄-R	◄-R ◄-R	◄-R	◄-R ◄-R ◄-R ◄-R	◄-R ◄-R ◄-R ◄-R	◄-R ◄-R
US ROUTE 30 - NEAR END MAST ARM & 2 FAR MIDDLE MAST ARM SIGNALS EB	R R	R R	R R	R R	R G	Y R	G G	Y R	Y R	R R R R	R R R R	R R R R	R R	R R R R	R R	R R	R	R R R R	R R R R	R R
US ROUTE 30 - 2-FAR RIGHT MAST ARM, NEAR MIDDLE MAST ARM & NEAR RIGHT SIGNALS EB	R► R►	R► R►	R► R►	R► R►	R► G►	Y► R►	G► G►	Y► R►	Y► R►	G► G► G► G►	G► G► Y► R►	G► G► Y► R►	Y► R►	G► G► Y► R►	Y► R►	R► R►	R►	R► R► R► R►	R► R► R► R►	R► R►
US ROUTE 30 2-FAR LEFT & END MAST ARM SIGNALS WB	◄-Y ◄-R	◄-Y ◄-R	◄-G ◄-G	◄-Y ◄-R	◄-G ◄-R	◄-R ◄-R	◄-R ◄-R	◄-R ◄-R	◄-R ◄-R	◄-R ◄-R ◄-R ◄-R	◄-R ◄-R ◄-R ◄-R	◄-R ◄-R ◄-R ◄-R	◄-R ◄-R	◄-R ◄-R ◄-R ◄-R	◄-R ◄-R	◄-R ◄-R	◄-R	◄-R ◄-R ◄-R ◄-R	◄-R ◄-R ◄-R ◄-R	◄-R ◄-R
US ROUTE 30 - NEAR RIGHT, FAR MIDDLE & RIGHT MAST ARM SIGNALS WB	R R	R R	R R	Y R	G R	R R	Y R	Y R	G G	R R R R	R R R R	R R R R	R R	R R R R	R R	R R	R	R R R R	R R R R	R R
DUGAN RD (NORTH OF TRACK) FAR LEFT & END MAST ARM SIGNALS NB	◄-R ◄-R	◄-R ◄-R	◄-R ◄-R	◄-R ◄-R	◄-R ◄-R	◄-R ◄-R	◄-R ◄-R	◄-R ◄-R	◄-R ◄-R	◄-G ◄-G ◄-Y ◄-R	◄-G ◄-G ◄-Y ◄-R	◄-G ◄-G ◄-Y ◄-R	◄-G ◄-G	◄-G ◄-G ◄-Y ◄-R	◄-G ◄-G	◄-R ◄-R	◄-R	◄-R ◄-R ◄-R ◄-R	◄-R ◄-R ◄-R ◄-R	◄-R ◄-R
DUGAN RD (NORTH OF TRACK) FAR MIDDLE & RIGHT MAST ARM SIGNALS NB	R R	R R	R R	R R	R R	R R	R R	R R	R R	R R R R	R R R R	R R R R	R R	G G Y R	G G	R R	R	G G Y R	G G Y R	G G
DUGAN RD (SOUTH OF TRACK) NEAR LEFT & END MAST ARM SIGNALS NB	◄-R ◄-R	◄-R ◄-R	◄-R ◄-R	◄-R ◄-R	◄-R ◄-R	◄-R ◄-R	◄-R ◄-R	◄-R ◄-R	◄-R ◄-R	◄-Y ◄-R ◄-R ◄-R	◄-Y ◄-R ◄-R ◄-R	◄-G ◄-G ◄-Y ◄-R	◄-G ◄-G	◄-Y ◄-R ◄-R ◄-R	◄-G ◄-G	◄-R ◄-R	◄-R	◄-R ◄-R ◄-R ◄-R	◄-R ◄-R ◄-R ◄-R	◄-R ◄-R
DUGAN RD (SOUTH OF TRACK) - NEAR RIGHT, MIDDLE & RIGHT MAST ARM SIGNALS NB	R R	R R	R R	R R	R R	R R	R R	R R	R R	R R R R	R R R R	R R R R	R R	Y R R R	G G	R R	R	Y R R R	Y R R R	G G
DUGAN RD FAR LEFT & END MAST ARM SIGNALS SB	◄-R ◄-R	◄-R ◄-R	◄-R ◄-R	◄-R ◄-R	◄-R ◄-R	◄-R ◄-R	◄-R ◄-R	◄-R ◄-R	◄-R ◄-R	◄-G ◄-G ◄-Y ◄-R	◄-G ◄-G ◄-G ◄-G	◄-Y ◄-R ◄-R ◄-R	◄-Y ◄-R	◄-R ◄-R ◄-R ◄-R	◄-R ◄-R	◄-Y ◄-R	◄-G	◄-R ◄-R ◄-R ◄-R	◄-R ◄-R ◄-R ◄-R	◄-R ◄-R
DUGAN RD - NEAR RIGHT, FAR MIDDLE & RIGHT MAST ARM SIGNALS SB	R R	R R	R R	R R	R R	R R	R R	R R	R R	R R R R	R R R R	R R R R	R R	R R R R	R R	Y R	G	G G Y R	G G G G	Y R

◊ EMERGENCY VEHICLE PREEMPTION SEQUENCE SHALL PROVIDE THE PROPER CLEARANCE INTERVAL TO RESUME THE NORMAL SEQUENCE OF OPERATION OR PROPER CLEARANCE INTERVAL TO DISPLAY AN EMERGENCY VEHICLE INTERVAL (IF APPLICABLE) AFTER EMERGENCY VEHICLE PREEMPTION INTERVAL 2, 3, 4 OR 5 IS TERMINATED.

	PREEMPTOR NUMBER 3	PREEMPTOR NUMBER 4	PREEMPTOR NUMBER 5	PREEMPTOR NUMBER 6	
CHANGE FROM NORMAL SEQUENCE OF OPERATION INTERVAL NUMBER					CLEAR TO NORMAL SEQUENCE
EMERGENCY VEHICLE PREEMPTION SEQUENCE OF OPERATION INTERVAL NUMBER	2	3	4	5	
CHANGE TO EMERGENCY VEHICLE PREEMPTION SEQUENCE OF OPERATION INTERVAL NUMBER					
US ROUTE 30 2-FAR LEFT & FAR END MAST ARM SIGNALS EB	◄-G	◄-R	◄-R	◄-R	◊
US ROUTE 30 - NEAR END MAST ARM & 2 FAR MIDDLE MAST ARM SIGNALS EB	G	R	R	R	◊
US ROUTE 30 - 2-FAR RIGHT MAST ARM, NEAR MIDDLE MAST ARM & NEAR RIGHT SIGNALS EB	G►	R►	R►	R►	◊
US ROUTE 30 2-FAR LEFT & END MAST ARM SIGNALS WB	◄-R	◄-R	◄-G	◄-R	◊
US ROUTE 30 - NEAR RIGHT, FAR MIDDLE & RIGHT MAST ARM SIGNALS WB	R	R	G	R	◊
DUGAN RD (NORTH OF TRACK) FAR LEFT & END MAST ARM SIGNALS NB	◄-R	◄-R	◄-R	◄-G	◊
DUGAN RD (NORTH OF TRACK) FAR MIDDLE & RIGHT MAST ARM SIGNALS NB	R	R	R	G	◊
DUGAN RD (SOUTH OF TRACK) NEAR LEFT & END MAST ARM SIGNALS NB	◄-R	◄-R	◄-R	◄-G	◊
DUGAN RD (SOUTH OF TRACK) - NEAR RIGHT, MIDDLE & RIGHT MAST ARM SIGNALS NB	R	R	R	G	◊
DUGAN RD FAR LEFT & END MAST ARM SIGNALS SB	◄-R	◄-G	◄-R	◄-R	◊
DUGAN RD - NEAR RIGHT, FAR MIDDLE & RIGHT MAST ARM SIGNALS SB	R	G	R	R	◊

TS862

FILE NAME = $FILE1$

AMES Engineering, Inc.
CONSULTING ENGINEERS
1341 Warren Avenue
Downers Grove, IL 60515

USER NAME = $USER$	DESIGNED - AS	REVISED -
	DRAWN - RV	REVISED -
PLOT SCALE = $SCALE$	CHECKED - MSA	REVISED -
PLOT DATE = $DATE$	DATE - 10-17-14	REVISED -

STATE OF ILLINOIS
DEPARTMENT OF TRANSPORTATION

EMERGENCY VEHICLE PREEMPTION SEQUEMCE OF OPERATION
US ROUTE 30 AND DUGAN ROAD

SCALE: NONE | SHEET NO. OF SHEETS | STA. TO STA.

F.A. RTE.	SECTION	COUNTY	TOTAL SHEETS	SHEET NO.
573	30-N (13)	KANE	219	118

CONTRACT NO. 60X70

FED. ROAD DIST. NO. | ILLINOIS | FED. AID PROJECT

PANEL SIGN DESIGN TYPE 1

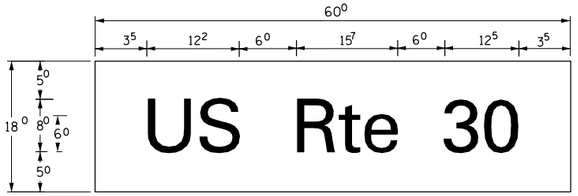

7.50 Sq. Ft. each
2 Required
Design Series D

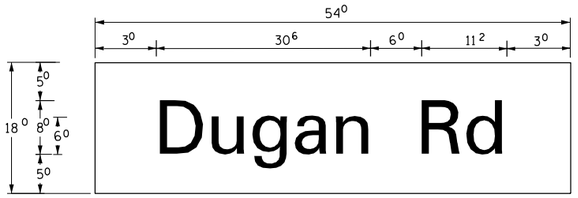

6.75 Sq. Ft. each
2 Required
Design Series D

PANEL SIGN DESIGN TYPE 2

NOTE: SIGN DIMENSIONS ARE IN ENGLISH UNITS

SUPPORTING CHANNELS

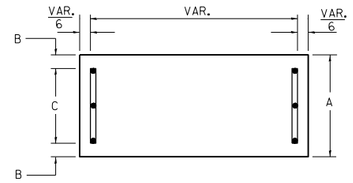

A	B	C
18"	2"	14"

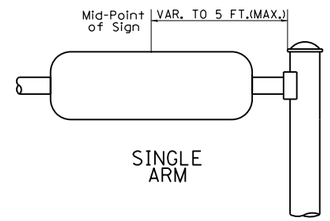

SUPPORTING CHANNELS

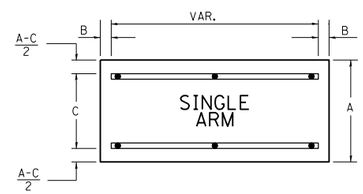

A	B	C
18"	2"	12"
30"	2"	22"

GENERAL NOTES

1. WHERE MAST ARM MOUNTED STREET NAME SIGNS ARE SPECIFIED, THE MAST ARM ASSEMBLY AND POLES SHALL BE DESIGNED TO SUPPORT THE LOADINGS CALLED FOR ON STANDARDS 834001, 834006 AND 834011, AS APPLICABLE, PLUS TWO (2) SIGN PANELS 2'-6" x 6'-0" MOUNTED AS SHOWN. THE DESIGN SHALL BE IN ACCORDANCE WITH THE REQUIREMENTS OF THE CURRENT "STANDARD SPECIFICATIONS FOR STRUCTURAL SUPPORTS FOR HIGHWAY SIGNS, LUMINAIRES, AND TRAFFIC SIGNALS" AS PUBLISHED BY THE AMERICAN ASSOCIATION OF STATE HIGHWAY AND TRANSPORTATION OFFICIALS FOR 80 M.P.H. WIND VELOCITY.
2. ALL SIGNS SHALL HAVE A WHITE REFLECTORIZED LEGEND AND BORDER ON A GREEN REFLECTORIZED BACKGROUND, TYPE A SHEETING.
3. THE SIGN LENGTH SHOULD BE INCREASED IN 6-INCH INCREMENTS, BUT THE OVERALL LENGTH SHOULD NOT EXCEED 6'-0".
4. ALL BORDERS SHALL BE ¾" WIDE AND CORNER RADIUS SHALL BE 2-1/4 ".
5. SIGNFIX ALUMINUM CHANNEL FRAMING SYSTEM SHALL BE USED FOR ALL SIGNS ATTACHED TO SIGNAL POLES AND POSTS. LOCAL SUPPLIERS OF THE SIGNFIX ALUMINUM CHANNEL FRAMING SYSTEM ARE:
   - * A.K.T. CORPORATION, SCHAUMBURG, IL
   - * TUCKER COMPANY, INC., WAUWATOSA, WI
   - * AMERICAN FABRICATION CO., CHICAGO HEIGHTS, IL
   - * WESTERN TRAFFIC CONTROL INC., CICERO, IL

PARTS LISTING:

SIGN CHANNEL	PART #HPN053 (MED. CHANNEL)
SIGN SCREWS	¼" x 14 x 1" H.W.H. #3 SELF TAPPING WITH NEOPRENE WASHER
BRACKETS	PART #HPN034 (UNIVERSAL) CHANNEL CLAMPS WITH STAINLESS STEEL STRAPPING

OTHER BRANDS OF MOUNTING HARDWARE ARE ACCEPTABLE, BASED UPON THE DEPARTMENT'S APPROVAL AND COMPATIBILITY WITH THE CHANNEL/BRACKET OF THE ABOVE PRODUCT.

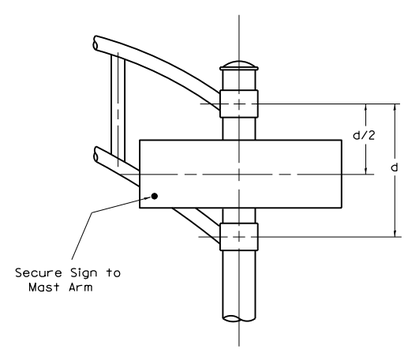

DUAL ARM

SIGNFIX ALUMINUM CHANNEL FRAMING SYSTEM

Shall be used. See Note #5.

EXAMPLE, 2③ — DENOTES 3/8"

Upper Case To Lower Case
Spacing Chart 8-6 Inch Series "C & D"

FIRST LETTER	SECOND LETTER: a c d e g o q		b h i k l m n p r u		f w		j		s t		v y		x		z	
SERIES	C	D	C	D	C	D	C	D	C	D	C	D	C	D	C	D
A W X	1 2	1 4	1 4	1 5	1 2	1 4	0 6	1 0	1 1	1 4	0 6	1 0	1 1	1 2	1 2	1 4
B	1 4	1 5	2 0	2 1	1 4	1 5	1 1	1 2	1 4	1 5	1 2	1 4	1 2	1 4	1 6	1 7
C E G	1 4	1 5	2 0	2 1	1 2	1 4	0 6	1 0	1 2	1 4	1 2	1 4	1 4	1 5	1 4	1 5
D O Q R	1 4	1 5	2 0	2 1	1 4	1 5	0 6	1 0	1 2	1 4	1 2	1 4	1 4	1 5	1 4	1 5
F	0 5	0 6	1 4	1 5	0 6	1 0	0 5	0 6	0 6	1 0	0 6	1 0	0 6	1 0	1 1	1 2
H I M N	2 0	2 1	2 2	2 4	2 0	2 1	1 4	1 5	1 6	1 7	1 6	1 7	2 0	2 1	2 0	2 1
J U	2 0	2 1	2 0	2 1	1 6	1 7	1 4	1 5	1 6	1 7	1 6	1 7	1 6	1 7	2 0	2 1
K L	1 1	1 2	1 6	1 7	1 1	1 2	0 5	0 6	1 1	1 2	1 1	1 2	1 1	1 2	1 2	1 4
P	1 2	1 4	1 4	1 5	1 2	1 4	0 5	0 6	1 1	1 2	1 1	1 2	1 2	1 4	1 2	1 4
S	1 2	1 4	1 6	1 7	1 2	1 4	0 6	1 0	1 2	1 4	1 2	1 4	1 2	1 4	1 2	1 4
T	1 1	1 2	1 6	1 7	0 6	1 0	0 6	1 0	1 1	1 2	1 1	1 2	1 1	1 2	1 2	1 4
V	0 6	1 0	1 4	1 5	1 1	1 2	0 6	1 0	1 2	1 4	1 2	1 4	1 2	1 4	1 2	1 4
Y	0 5	0 6	1 4	1 5	0 6	1 0	0 5	0 6	0 5	0 7	0 5	0 6	0 6	1 0	1 1	1 2
Z	1 6	1 7	2 2	2 4	1 6	1 7	1 2	1 4	1 6	1 7	1 6	1 7	1 6	1 7	2 0	2 1

Lower Case To Lower Case
Spacing Chart 6 Inch Series "C & D"

FIRST LETTER	SECOND LETTER: a c d e g o q		b h i k l m n p r u		f w		j		s t		v y		x		z	
SERIES	C	D	C	D	C	D	C	D	C	D	C	D	C	D	C	D
a d h g i j l m n q u	1 6	1 7	2 2	2 4	1 6	1 7	1 2	1 4	1 4	1 5	1 4	1 5	1 6	1 7	1 6	1 7
b f k o p s	1 2	1 4	1 6	1 7	1 1	1 2	0 5	0 6	1 1	1	1 1	1 2	1 2	1 4	1 2	1 4
c e	1 2	1 4	1 6	1 7	1 2	1 4	0 6	1 0	1 2	1 4	1 2	1 4	1 2	1 4	1 2	1 4
r	0 6	1 0	1 2	1 4	0 6	1 0	0 3	0 3	0 5	0 6	0 5	0 6	0 6	1 0	0 6	1 0
t z	1 2	1 4	1 6	1 7	1 2	1 4	0 6	1 0	1 1	1 2	1 1	1 2	1 2	1 4	1 2	1 4
v y	1 1	1 2	1 4	1 5	1 1	1 2	0 5	0 6	0 6	1 0	0 6	1 0	1 1	1 2	1 1	1 2
w	1 1	1 2	1 4	1 5	1 1	1 2	0 5	0 6	1 1	1 2	1 1	1 2	1 1	1 2	1 2	1 4
x	1 2	1 4	1 6	1 7	1 1	1 2	0 5	0 6	1 1	1 2	1 1	1 2	1 1	1 2	1 2	1 4

Number To Number
Spacing Chart 8 Inch Series "C & D"

FIRST NUMBER	SECOND NUMBER: 0		1		2		3		4		5		6		7		8		9	
SERIES	C	D	C	D	C	D	C	D	C	D	C	D	C	D	C	D	C	D	C	D
0 9	1 6	1 7	1 6	1 7	1 4	1 5	1 2	1 4	1 4	1 5	1 4	1 5	1 6	1 7	1 2	1 4	1 6	1 7	1 6	1 7
1	2 0	2 1	2 0	2 1	2 0	2 1	1 6	1 7	1 4	1 5	2 0	2 1	2 0	2 1	1 4	1 5	2 0	2 1	2 0	2 1
2 3 4	1 4	1 5	1 4	1 5	1 4	1 5	1 2	1 4	1 2	1 4	1 4	1 5	1 4	1 5	1 1	1 2	1 6	1 7	1 4	1 5
5	1 4	1 5	1 4	1 5	1 4	1 5	1 1	1 2	1 1	1 2	1 4	1 5	1 4	1 5	1 1	1 2	1 4	1 5	1 4	1 5
6	1 6	1 7	1 4	1 5	1 4	1 5	1 2	1 5	1 2	1 4	1 4	1 5	1 4	1 5	1 1	1 2	1 4	1 5	1 4	1 5
7	1 2	1 4	1 2	1 4	1 4	1 5	1 2	1 5	0 5	0 6	1 2	1 4	1 4	1 5	1 1	1 2	1 4	1 5	1 2	1 4
8	1 6	1 7	1 6	1 7	1 4	1 5	1 2	1 5	1 2	1 4	1 4	1 5	1 6	1 7	1 2	1 4	1 6	1 7	1 4	1 5

UPPER AND LOWER CASE LETTER WIDTHS

LETTERS	6 INCH UPPER CASE LETTERS SERIES C	6 INCH UPPER CASE LETTERS SERIES D	8 INCH UPPER CASE LETTERS SERIES C	8 INCH UPPER CASE LETTERS SERIES D	LETTERS	6 INCH LOWER CASE LETTERS SERIES C	6 INCH LOWER CASE LETTERS SERIES D
A	3 6	5 0	5 0	6 5	a	3 5	4 2
B	3 2	4 0	4 3	5 3	b	3 5	4 2
C	3 2	4 0	4 3	5 3	c	3 5	4 1
D	3 2	4 0	4 3	5 3	d	3 5	4 2
E	3 0	3 5	4 0	4 7	e	3 5	4 2
F	3 0	3 5	4 0	4 7	f	2 3	2 6
G	3 2	4 0	4 3	5 3	g	3 5	4 2
H	3 2	4 0	4 3	5 3	h	3 5	4 2
I	0 7	0 7	1 1	1 2	i	1 1	1 1
J	3 0	3 6	4 0	5 0	j	2 0	2 2
K	3 2	4 1	4 3	5 4	k	3 5	4 2
L	3 0	3 5	4 0	4 7	l	1 1	1 1
M	3 7	4 5	5 1	6 1	m	6 0	7 0
N	3 2	4 0	4 3	5 3	n	3 5	4 2
O	3 4	4 2	4 5	5 5	o	3 6	4 3
P	3 2	4 0	4 3	5 3	p	3 5	4 2
Q	3 4	4 2	4 5	5 5	q	3 5	4 2
R	3 2	4 0	4 3	5 3	r	2 6	3 2
S	3 2	4 0	4 3	5 3	s	3 6	4 2
T	3 0	3 5	4 0	4 7	t	2 7	3 2
U	3 2	4 0	4 3	5 3	u	3 5	4 2
V	3 5	4 4	4 7	6 0	v	4 2	4 7
W	4 4	5 2	6 0	7 0	w	5 5	6 4
X	3 4	4 0	4 5	5 3	x	4 4	5 1
Y	3 6	5 0	5 0	6 6	y	4 6	5 3
Z	3 2	4 0	4 3	5 3	z	3 6	4 3

NUMBER	6 INCH SERIES C	6 INCH SERIES D	8 INCH SERIES C	8 INCH SERIES D
1	1 2	1 4	1 5	2 0
2	3 2	4 0	4 3	5 3
3	3 2	4 0	4 3	5 3
4	3 5	4 3	4 7	5 7
5	3 2	4 0	4 3	5 3
6	3 2	4 0	4 3	5 3
7	3 2	4 0	4 3	5 3
8	3 2	4 0	4 3	5 3
9	3 2	4 0	4 3	5 3
0	3 4	4 2	4 5	5 5

TS862

AMES Engineering, Inc.
CONSULTING ENGINEERS
1341 Warren Avenue
Downers Grove, IL 60515

USER NAME = $USER$	DESIGNED - AS	REVISED -	
	DRAWN - RV	REVISED -	
PLOT SCALE = $SCALE$	CHECKED - MSA	REVISED -	
PLOT DATE = $DATE$	DATE - 10-17-14	REVISED -	

STATE OF ILLINOIS
DEPARTMENT OF TRANSPORTATION

MAST ARM MOUNTED STREET NAME SIGNS
US ROUTE 30 AND DUGAN ROAD

SCALE: | SHEET NO. OF SHEETS | STA. TO STA.

F.A. RTE.	SECTION	COUNTY	TOTAL SHEETS	SHEET NO.
573	30-N (13)	KANE	219	119
		CONTRACT NO. 60X70		

FED. ROAD DIST. NO. | ILLINOIS | FED. AID PROJECT

FILE NAME = $FILE$

TRAFFIC SIGNAL LEGEND

ITEM	REMOVAL	EXISTING	PROPOSED
CONTROLLER CABINET	R		
RAILROAD CONTROL CABINET		R	
COMMUNICATIONS CABINET	R CC	E C C	C C
MASTER CONTROLLER		EMC	MC
MASTER MASTER CONTROLLER		EMMC	MMC
UNINTERRUPTABLE POWER SUPPLY	R UPS	EUPS	UPS
SERVICE INSTALLATION, (P) POLE OR (G) GROUND MOUNT	R	P	P
TELEPHONE CONNECTION (P) POLE OR (G) GROUND MOUNT	R T	P T	P T
STEEL MAST ARM ASSEMBLY AND POLE	R		
ALUMINUM MAST ARM ASSEMBLY AND POLE	R		
STEEL COMBINATION MAST ARM ASSEMBLY AND POLE WITH LUMINAIRE	R		
STEEL COMBINATION MAST ARM ASSEMBLY AND POLE WITH PTZ CAMERA	R PTZ	PTZ	PTZ
SIGNAL POST	R		
TEMPORARY WOOD POLE (CLASS 5 OR BETTER) 45 FOOT (13.7m) MINIMUM	R		
GUY WIRE	R		
SIGNAL HEAD	R		
SIGNAL HEAD CONSTRUCTION STAGES (NUMBERS INDICATE THE CONSTRUCTION STAGE)			2
SIGNAL HEAD WITH BACKPLATE	R		
SIGNAL HEAD OPTICALLY PROGRAMMED	R "P"	"P"	"P"
FLASHER INSTALLATION (S DENOTES SOLAR POWER)	R "F"	"F"	"F"
PEDESTRIAN SIGNAL HEAD	R		
PEDESTRIAN PUSHBUTTON DETECTOR	R		
ACCESSIBLE PEDESTRIAN PUSHBUTTON DETECTOR	R APS	APS	APS
ILLUMINATED SIGN "NO LEFT TURN"	R		
ILLUMINATED SIGN "NO RIGHT TURN"	R		
DETECTOR LOOP, TYPE I			
PREFORMED DETECTOR LOOP		P	P
MICROWAVE VEHICLE SENSOR	R M	M	M
VIDEO DETECTION CAMERA	R V	V	V
VIDEO DETECTION ZONE			
PAN, TILT, ZOOM CAMERA	R PTZ	PTZ	PTZ
WIRELESS DETECTOR SENSOR	R W	W	W
WIRELESS ACCESS POINT	R		

ITEM	REMOVAL	EXISTING	PROPOSED
EMERGENCY VEHICLE LIGHT DETECTOR	R		
CONFIRMATION BEACON	R		
HANDHOLE	R		
HEAVY DUTY HANDHOLE	R H	H	H
DOUBLE HANDHOLE	R		
JUNCTION BOX	R		
UNDERGROUND CONDUIT, GALVANIZED STEEL (UC)			
TEMPORARY SPAN WIRE, TETHER WIRE, AND CABLE	R		
COMMON TRENCH			CT
COILABLE NONMETALLIC CONDUIT (EMPTY)			CNC
SYSTEM ITEM		S	S
INTERSECTION ITEM		I	IP
REMOVE ITEM	R		
RELOCATE ITEM	RL		
ABANDON ITEM	A		
12" (300mm) TRAFFIC SIGNAL SECTION		R	R
12" (300mm) RED WITH 8" (200mm) YELLOW AND GREEN TRAFFIC SIGNAL FACE		R Y G	
SIGNAL FACE		R Y G Y G	R Y G Y G
SIGNAL FACE WITH BACKPLATE. "P" INDICATES PROGRAMMED HEAD "RB" INDICATES REFLECTIVE BACKPLATE		R Y G Y G "P"	R Y G Y G "P"
12" (300mm) PEDESTRIAN SIGNAL HEAD WALK/DON'T WALK SYMBOL		DW W	
12" (300mm) PEDESTRIAN SIGNAL HEAD INTERNATIONAL SYMBOL, OUTLINED			
12" (300mm) PEDESTRIAN SIGNAL HEAD INTERNATIONAL SYMBOL, SOLID			
PEDESTRIAN SIGNAL HEAD, INTERNATIONAL SYMBOL, WITH COUNTDOWN TIMER		C D	C D
RADIO INTERCONNECT	R		
RADIO REPEATER	R ERR	ERR	RR
DENOTES NUMBER OF CONDUCTORS, ELECTRIC CABLE NO. 14, UNLESS NOTED OTHERWISE, ALL DETECTOR LOOP CABLE TO BE SHIELDED		5	5
GROUND CABLE IN CONDUIT NO. 6 SOLID COPPER (GREEN)		1	1

ITEM	REMOVAL	EXISTING	PROPOSED
ELECTRIC CABLE IN CONDUIT, TRACER, NO. 14 1/C, UNLESS NOTED OTHERWISE		1	1
COAXIAL CABLE		C	C
VENDOR CABLE FOR CAMERA		V	V
COPPER INTERCONNECT CABLE, NO. 18 3 PAIR TWISTED, SHIELDED		6	6
FIBER OPTIC CABLE NO. 62.5/125, MM12F		12F	
FIBER OPTIC CABLE NO. 62.5/125, MM12F SM12F		24F	24F
FIBER OPTIC CABLE NO. 62.5/125, MM12F SM24F		36F	36F
GROUND ROD AT (C) CONTROLLER, (H) HANDHOLE, (P) POST, (N) MAST ARM, OR (S) SERVICE		C	C
CONTROLLER CABINET AND FOUNDATION TO BE REMOVED	RCF		
STEEL MAST ARM POLE AND FOUNDATION TO BE REMOVED	RMF		
ALUMINUM MAST ARM POLE AND FOUNDATION TO BE REMOVED	RMF		
STEEL COMBINATION MAST ARM ASSEMBLY AND POLE WITH LUMINAIRE AND FOUNDATION TO BE REMOVED	RMF		
SIGNAL POST AND FOUNDATION TO BE REMOVED	RPF		
INTERSECTION & SAMPLING (SYSTEM) DETECTOR		IS	IS
SAMPLING (SYSTEM) DETECTOR		S	S
QUEUE DETECTOR		Q	Q
PREFORMED QUEUE DETECTOR		PQ	PQ
PREFORMED INTERSECTION AND SAMPLING (SYSTEM) DETECTOR		PIS	PIS
PREFORMED SAMPLING (SYSTEM) DETECTOR		PS	PS

RAILROAD SYMBOLS

	EXISTING	PROPOSED
RAILROAD CONTROL CABINET		
RAILROAD CANTILEVER MAST ARM		
FLASHING SIGNAL		
CROSSING GATE		
CROSSBUCK		

COMPANY NAME:
PROJECT CONTACT:
CLIENT:
DATE PLOTTED: 10/15/2014 8:18:05 AM
FILE NAME: p912013-sht-details-027-1505a.dgn
PLOT DRIVER: pdf.pltt
PEN TABLE: standard-trans-screen.tbl

FILE NAME = c:\pw_work\pwidot\footemj\d0108315\ts05.dgn	USER NAME = footemj	DESIGNED - DAG/BCK	REVISED - DAG 1-1-14
		DRAWN - BCK	REVISED -
	PLOT SCALE = 50.0000 ' / in.	CHECKED - DAD	REVISED -
	PLOT DATE = 1/13/2014	DATE - 10-28-09	REVISED -

STATE OF ILLINOIS
DEPARTMENT OF TRANSPORTATION

DISTRICT ONE
STANDARD TRAFFIC SIGNAL DESIGN DETAILS

SCALE: N.T.S. | SHEET NO. OF SHEETS | STA. TO STA.

F.A.P. RTE.	SECTION	COUNTY	TOTAL SHEETS	SHEET NO.
573	30-N(13)	KANE	219	120
	TS-05	CONTRACT NO. 60X70		
FED. ROAD DIST. NO.	ILLINOIS	FED. AID PROJECT		

LOOP DETECTOR NOTES

1. EACH PAIR OF LOOP WIRES SHALL BE PLACED IN A SEPARATE EMPTY COILABLE NONMETALLIC CONDUIT FROM THE EDGE OF PAVEMENT TO THE HANDHOLE. SPACING BETWEEN THE HOLES DRILLED IN THE PAVEMENT SHALL NOT BE LESS THAN 6" (150 mm). EMPTY COILABLE NONMETALLIC CONDUIT SHALL BE INCLUDED IN THE COST OF THE LOOP WIRE.

2. THE NUMBER OF LOOP TURNS SHALL BE AS RECOMMENDED BY THE AMPLIFIER MANUFACTURER. ALL ADJACENT SIDES OF THE LOOPS SHALL BE INSTALLED IN SUCH A WAY THAT THE CURRENT FLOW IS IN THE SAME DIRECTION TO REINFORCE ITS MAGNETIC FIELDS FOR SMALL VEHICLE DETECTION.

3. EACH LOOP LEAD-IN SHALL BE IDENTIFIED AND PERMANENTLY TAGGED IN THE HANDHOLE. EACH LEAD-IN CABLE TAG SHALL INDICATE THE LOCATION OF THE LOOP, LOOP ROTATION (CLOCKWISE/COUNTERCLOCKWISE), LOOP LEAD-IN DIRECTION (IN OR OUT), LOOP CABLE NUMBER AND LOCATION IN CABINET, AND NUMBER OF TURNS IN THE DETECTOR LOOPS IN WATER PROOF INK AS INDICATED ON THE DISTRICT 1 STANDARD TRAFFIC SIGNAL DESIGN DETAIL. THE CONTRACTOR SHALL MARK LOOP LOCATIONS ON RECORD DRAWINGS AND PRESENT TO THE ENGINEER AFTER FINAL INSPECTION. LOOPS SHALL BE MARKED BY LANE AND LOOP NUMBER. SEE DETAIL BELOW.

4. ALL LOOP CABLE SHALL BE FASTENED WITH PLASTIC TIE WRAP TO THE HANDHOLE HOOKS.

5. IN ASPHALT PAVEMENT, LOOPS SHOULD BE PLACED IN THE BINDER AND DIVEHOLES MARKED AT THE CURB WITH A SAW-CUT. THE SAW-CUT SHALL BE CUT IN ACCORDANCE WITH LOCAL AND E.P.A. DUST CONTROL REQUIREMENTS. DETECTOR LOOP(S) SHALL NOT BE INSTALLED IN WET CONDITIONS AND THE SAW-CUTS MUST BE FREE OF DEBRIS AND RESIDUE SUCH AS DUST AND WATER WHICH IS TO BE ACHIEVED BY THE USE OF COMPRESSED AIR, WIRE BRUSHING AND HEAT DRYING ACCORDING TO SEALANT MANUFACTURER REQUIREMENTS. THE DETECTOR WIRE SHALL BE HELD IN PLACE BY THE USE OF FORM WEDGES. WEDGES SHALL BE SPACED NO MORE THAN 18" (450 mm) APART.

6. LOOP SPLICES SHALL BE SOLDERED USING A SOLDERING IRON. BLOW TORCHES OR OTHER DEVICES WHICH OXIDIZE COPPER CABLE SHALL NOT BE ALLOWED FOR SOLDERING OPERATIONS. SEE DETAIL BELOW RIGHT.

7. PREFORMED DETECTOR LOOPS SHALL BE USED, AS SHOWN ON THE PLANS, WHERE NEW CONCRETE PAVEMENT IS PROPOSED. THE INSTALLATION OF PREFORMED LOOPS SHALL BE IN ACCORDANCE WITH THE DISTRICT 1 SPECIFICATIONS OR AS DIRECTED BY THE ENGINEER.

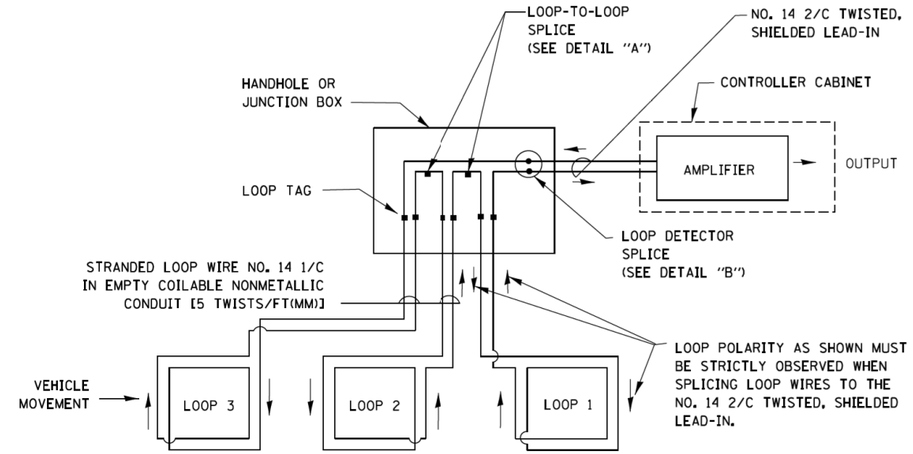

DETECTOR LOOP WIRING SCHEMATIC

- LOOPS SHALL BE SPLICED IN SERIES.
- SAW-CUTS SHALL BE A MINIMUM WIDTH OF 5/16" (8 mm).
- SAW-CUT DEPTHS SHALL BE 3" (75 mm). IF IN CONCRETE, THE SAW-CUT DEPTH SHALL BE TO THE TOP OF THE REINFORCEMENT.
- LOOP CORNERS SHALL BE DRILLED WITH A 2" (50 mm) DIAMETER CORE.

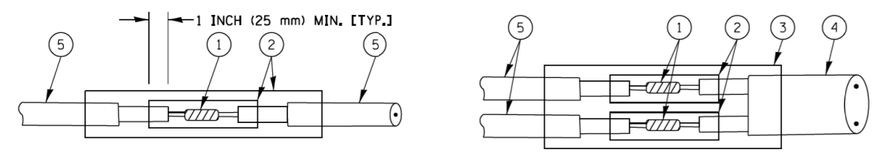

DETAIL "A"
LOOP-TO-LOOP SPLICE

DETAIL "B"
LOOP-TO-CONTROLLER SPLICE

TYPE I LOOP

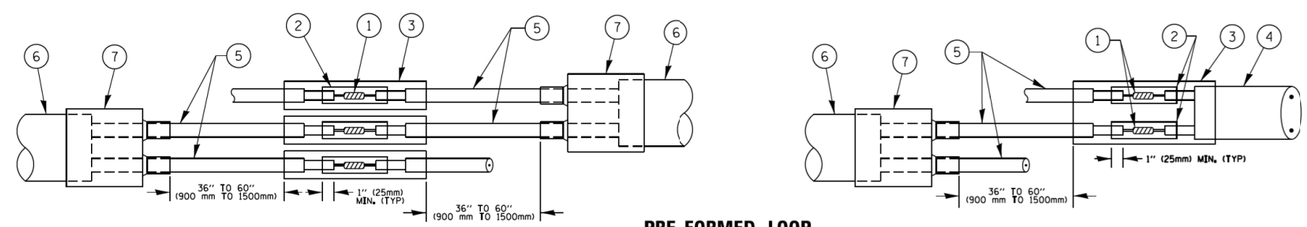

DETAIL "A"
LOOP-TO-LOOP SPLICE

PRE-FORMED LOOP

DETAIL "B"
LOOP-TO-CONTROLLER SPLICE

LOOP LEAD-IN CABLE TAG

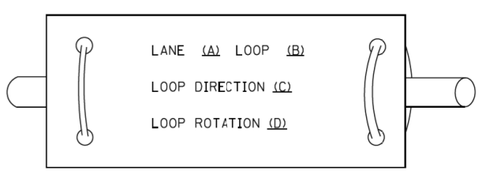

A. LANE 1 IS THE LANE CLOSEST TO THE CENTERLINE OF THE ROADWAY

B. LOOP #1 IS THE LOOP IN THE LANE CLOSEST TO THE INTERSECTION.

C. LABEL LOOP CABLE "IN" OR LOOP CABLE "OUT".

D. LABEL LOOP CABLE CLOCKWISE OR LOOP CABLE COUNTERCLOCKWISE.

LOOP DETECTOR SPLICE

1. WESTERN UNION SPLICE SOLDERED WITH ROSIN CORE FLUX. ALL EXPOSED SURFACES OF THE SOLDER SHALL BE SMOOTH. THE WESTERN UNION SPLICES SHALL BE STAGGERED.
2. WCSMW 30/100 HEAT SHRINK TUBE, MINIMUM LENGTH 3" (75 mm), UNDERWATER GRADE.
3. WCS 200/750 HEAT SHRINK TUBE, MINIMUM LENGHT 6" (150 mm), UNDERWATER GRADE.
4. NO. 14 2/C TWISTED, SHIELDED CABLE.
5. LOOP CONDUCTOR WITH FLEXIBLE PLASTIC TUBE.
6. PRE-FORMED LOOP
7. XL POLYOLEFIN 2 CONDUCTOR BREAKOUT SEALS. TYCO CBR-2 OR APPROVED EQUAL

TRAFFIC SIGNAL MAST ARM AND SIGNAL POST

MAST ARM MOUNTED SIGNALS IN EXISTING, PROPOSED OR FUTURE SIDEWALK/BICYCLE PATH AREA. INTERSECTION SHOWN WITH PEDESTRIAN SIGNALS AND PEDESTRIAN PUSHBUTTON DETECTORS.

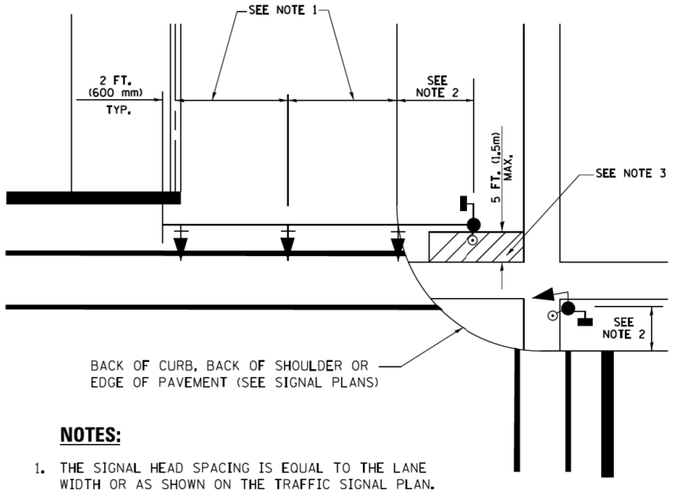

NOTES:

1. THE SIGNAL HEAD SPACING IS EQUAL TO THE LANE WIDTH OR AS SHOWN ON THE TRAFFIC SIGNAL PLAN.
2. REFER TO THE TRAFFIC SIGNAL EQUIPMENT OFFSET TABLE.
3. PROVIDE A LEVEL ALL-WEATHER SURFACE (CONCRETE SIDEWALK, ASPHALT BICYCLE PATH SURFACE OR MATCHING MATERIAL TO THE ADJACENT SURFACE) UP TO THE MAST ARM SHAFT OR THE SIGNAL POST.
4. THE FACE OF THE PEDESTRIAN PUSHBUTTON SHALL BE PARALLEL TO THE CROSSWALK TO BE USED.
5. THE LOCATIONS AND INSTALLATION OF PEDESTRIAN SIGNAL HEADS AND PEDESTRIAN PUSHBUTTONS SHALL MEET THE REQUIREMENTS OF THE MUTCD AND INFORMATION FOUND IN THE "AMERICANS WITH DISABILITIES ACT ACCESSIBILITY GUIDELINES FOR BUILDINGS AND FACILITIES."

PEDESTRIAN SIGNAL POST AND PEDESTRIAN PUSH BUTTON POST

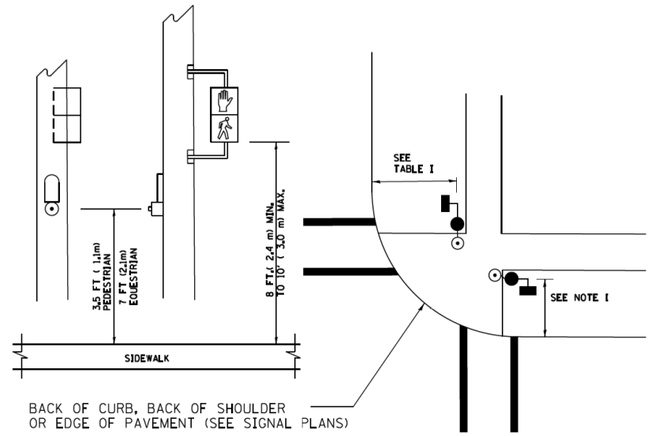

NOTES:

1. REFER TO THE TRAFFIC SIGNAL EQUIPMENT OFFSET TABLE.
2. PROVIDE A LEVEL ALL-WEATHER SURFACE (CONCRETE SIDEWALK, ASPHALT BICYCLE PATH SURFACE OR MATCHING MATERIAL TO THE ADJACENT SURFACE) UP TO THE PEDESTRIAN SIGNAL POST OR THE PEDESTRIAN PUSH BUTTON POST.
3. THE FACE OF THE PEDESTRIAN PUSHBUTTON SHALL BE PARALLEL TO THE CROSSWALK TO BE USED.
4. THE LOCATIONS AND INSTALLATION OF PEDESTRIAN SIGNAL HEADS AND PEDESTRIAN PUSHBUTTONS SHALL MEET THE REQUIREMENTS OF THE MUTCD AND INFORMATION FOUND IN THE "AMERICANS WITH DISABILITIES ACT ACCESSIBILITY GUIDELINES FOR BUILDINGS AND FACILITIES."

RECOMMENDED PUSHBUTTON LOCATIONS

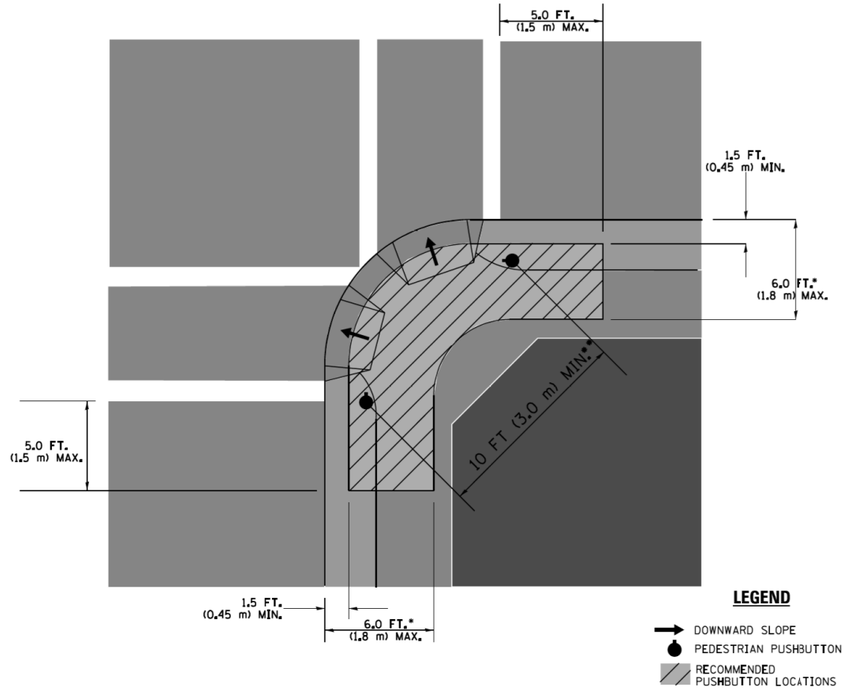

* WHERE THERE ARE CONSTRAINTS THAT MAKE IT IMPRACTICAL TO PLACE THE PEDESTRIAN PUSHBUTTON BETWEEN 1.5 FT (0.45 m) AND 6 FT (1.8 m) FROM THE EDGE OF THE CURB, SHOULDER, OR PAVEMENT, IT SHOULD NOT BE FURTHER THAN 10 FT (3 m) FROM THE EDGE OF CURB, SHOULDER, OR PAVEMENT.

** WHERE THERE ARE CONSTRAINTS ON A PARTICULAR CORNER THAT MAKE IT IMPRACTICAL TO PROVIDE THE 10 FT (3 m) SEPERATION BETWEEN THE TWO PEDESTRIAN PUSHBUTTONS, THE PUSHBUTTONS MAY BE PLACED CLOSER TOGETHER OR ON THE SAME POLE.

NOTES:

1. PEDESTRIAN SIGNAL HEADS SHALL BE MOUNTED WITH THE BOTTOM OF THE SIGNAL HOUSING INCLUDING BRACKETS NOT LESS THAN 8 FT (2.4 m) OR MORE THAN 10 FT (3 m) ABOVE SIDEWALK LEVEL, AND SHALL BE POSITIONED AND ADJUSTED TO PROVIDE MAXIMUM VISIBILITY AT THE BEGINNING OF THE CONTROLLED CROSSWALK.
2. THE BOTTOM OF THE SIGNAL HOUSING (INCLUDING BRACKETS) OF A VEHICULAR SIGNAL FACE THAT IS NOT LOCATED OVER A HIGHWAY SHALL BE AT LEAST 8 FT (2.4 m) BUT NOT MORE THAN 19 FT (5.8 m) ABOVE THE SIDEWALK OR, IF THERE IS NO SIDEWALK, ABOVE THE PAVEMENT GRADE AT THE CENTER OF THE ROADWAY.
3. THE BOTTOM OF THE SIGNAL HOUSING AND ANY RELATED ATTACHMENTS TO A SIGNAL FACE LOCATED OVER ANY PORTION OF A HIGHWAY SHALL BE ACCORDING TO CURRENT STATE STANDARDS 877001, 877002, 877006, 877011 AND 877012 WITH A MINIMUM OF 16 FT (5.0 m) AND A MAXIMUM OF 18 FT. (5.5 m) FROM THE HIGHEST POINT OF PAVEMENT.
4. THE BOTTOM OF THE TEMPORARY SPAN WIRE MOUNTED SIGNAL HOUSING AND ANY RELATED ATTACHMENTS TO A SIGNAL FACE LOCATED OVER ANY PORTION OF A HIGHWAY SHALL BE ACCORDING TO CURRENT STATE STANDARD 880001 WITH A MINIMUM OF 17 FT (5.18 m) FROM THE HIGHEST POINT OF PAVEMENT.
5. THE TOP OF THE SIGNAL HOUSING OF A SIGNAL FACE LOCATED OVER ANY PORTION OF A HIGHWAY SHALL NOT BE MORE THAN 25.6 FT (7.8 m) ABOVE THE PAVEMENT.

TRAFFIC SIGNAL EQUIPMENT OFFSET

TRAFFIC SIGNAL EQUIPMENT	COMBINATION CONCRETE CURB AND GUTTER (MINIMUM DISTANCE FROM BACK OF CURB TO CENTERLINE OF FOUNDATION)	SHOULDER/NON-CURBED AREA (MINIMUM DISTANCE FROM EDGE OF PAVEMENT TO CENTERLINE OF FOUNDATION)
TRAFFIC SIGNAL MAST ARM POLE	6 FT (1.8m)	SHOULDER WIDTH + 2 FT (0.6m), MINIMUM 10 FT (3.0m)
TRAFFIC SIGNAL POST	4 FT (1.2m)	SHOULDER WIDTH + 2 FT (0.6m), MINIMUM 10 FT (3.0m)
PEDESTRIAN SIGNAL POST	4 FT (1.2m)	SHOULDER WIDTH + 2 FT (0.6m), MINIMUM 10 FT (3.0m)
PEDESTRIAN PUSHBUTTON POST	4 FT (1.2m)	SHOULDER WIDTH + 2 FT (0.6m), MINIMUM 10 FT (3.0m)
TEMPORARY WOOD POLE	6 FT (1.8m)	SHOULDER WIDTH + 2 FT (0.6m), MINIMUM 10 FT (3.0m)
CONTROLLER CABINET	6 FT (1.8m) MINIMUM DISTANCE SEE NOTE 2	SHOULDER WIDTH + 6 FT (1.8m), MINIMUM 16 FT (4.9m) SEE NOTE 3.
SERVICE INSTALLATION, GROUND MOUNT	6 FT (1.8m) MINIMUM DISTANCE SEE NOTE 2	SHOULDER WIDTH + 6 FT (1.8m), MINIMUM 16 FT (4.9m) SEE NOTE 3.

NOTES:

1. CONTACT THE "AREA TRAFFIC SIGNAL MAINTENANCE AND OPERATIONS ENGINEER" FOR ASSISTANCE IN LOCATING THE TRAFFIC SIGNAL EQUIPMENT WHEN THERE ARE CONFLICTS WITH DITCHES OR THE MINIMUM OFFSET DISTANCES CANNOT BE MET.
2. MINIMUM DISTANCE FROM THE BACK OF CURB TO THE ROADWAY SIDE OF THE FOUNDATION.
3. MINIMUM DISTANCE FROM THE EDGE OF PAVEMENT TOTHE ROADWAY SIDE OF THE FOUNDATION.
4. ANY CHANGES TO THE OFFSETS OF THE FOUNDATIONS, FROM THE MINIMUM DISTANCES LISTED IN THE "TRAFFIC SIGNAL EQUIPMENT OFFSET" CHART AND THE TRAFFIC SIGNAL INSTALLATION PLAN, COULD EFFECT THE PLACEMENT OF THE SIGNAL HEADS, PEDESTRIAN SIGNAL HEADS AND THE PEDESTRIAN PUSHBUTTONS. THE SIGNAL HEAD PLACEMENT ON THE MAST ARMS SHALL REMAIN AS PER THE TRAFFIC SIGNAL INSTALLATION PLAN AND THE "TRAFFIC SIGNAL MAST ARM AND SIGNAL POST" DETAIL ABOVE. THE PROPOSED MAST ARM LENGTHS MAY NEED TO BE REVISED TO MEET THE ABOVE REQUIREMENTS. THE PEDESTRIAN SIGNAL HEADS AND PEDESTRIAN PUSHBUTTONS MUST MEET THE REQUIREMENTS UNDER THE DETAILS ON THIS SHEET.

COMPANY NAME:
PROJECT CONTACT:
CLIENT:
DATE PLOTTED: 10/15/2014 8:30:29 AM
FILE NAME: p912013-sht-details-029-1505c.dgn
PLOT DRIVER: pdf.pltl
PEN TABLE: standard-trans-screen.tbl

FILE NAME = c:\pw_work\pwidot\footemj\d0108315\ts05.dgn
USER NAME = footemj
PLOT SCALE = 50.0000 ' / in.
PLOT DATE = 1/13/2014
DESIGNED - DAD
DRAWN - BCK
CHECKED - DAD
DATE - 10-28-09
REVISED - DAG 1-1-14
REVISED -
REVISED -
REVISED -

STATE OF ILLINOIS
DEPARTMENT OF TRANSPORTATION

DISTRICT ONE
STANDARD TRAFFIC SIGNAL DESIGN DETAILS

SCALE: N.T.S. | SHEET NO. OF SHEETS | STA. TO STA.

F.A.P. RTE.	SECTION	COUNTY	TOTAL SHEETS	SHEET NO.
573	30-N(13)	KANE	219	122
	TS-05	CONTRACT NO. 60X70		

FED. ROAD DIST. NO. | ILLINOIS | FED. AID PROJECT

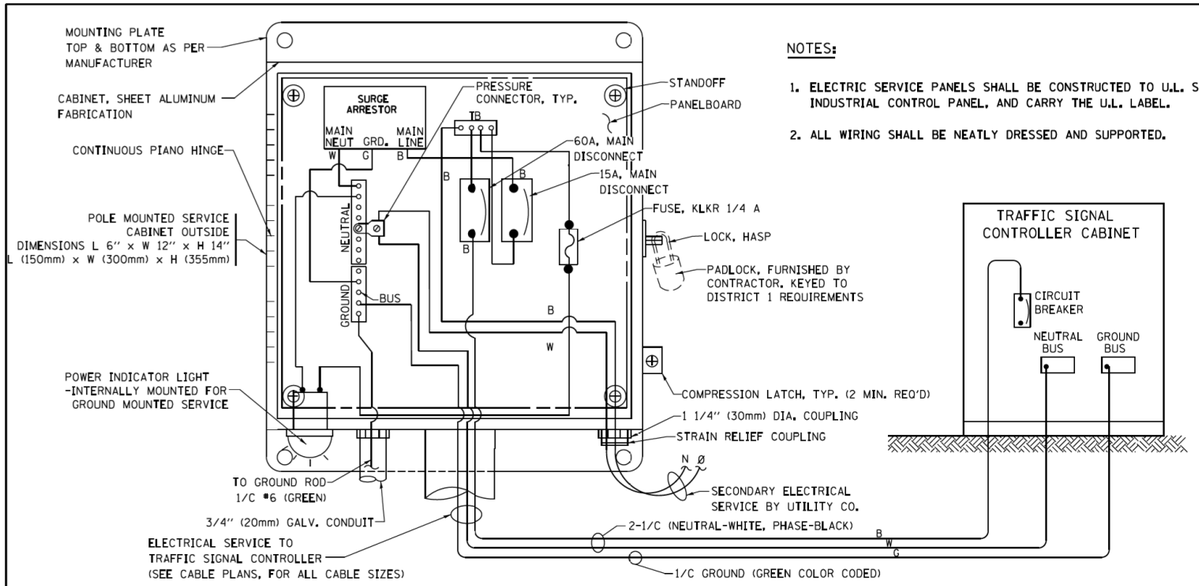

ELECTRICAL SERVICE – PANEL DIAGRAM (TYPICAL FOR POLE AND GROUND MOUNTED SERVICE)
SERVICE INSTALLATION POLE MOUNT (SHOWN)
(NOT TO SCALE)

NOTES:

1. ELECTRIC SERVICE PANELS SHALL BE CONSTRUCTED TO U.L. STD 508, INDUSTRIAL CONTROL PANEL, AND CARRY THE U.L. LABEL.
2. ALL WIRING SHALL BE NEATLY DRESSED AND SUPPORTED.

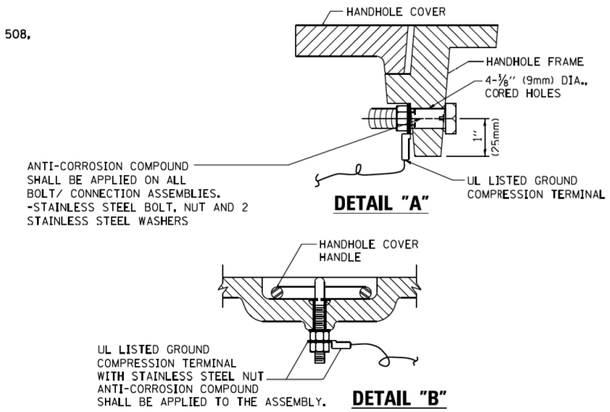

NOTES:
GROUNDING SYSTEM

1. THE GROUNDING SYSTEM SHALL CONSIST OF AN INSULATED CONDUCTOR TYPE XLP, NO. 6 A.W.G., STRANDED COPPER TO BE INSTALLED IN RACEWAYS. THE GROUNDING CABLE SHALL BE INSTALLED IN A CONTINUOUS MANNER AS SHOWN ON THE CABLE PLAN PROVIDED. ALL GROUNDING CONDUCTORS SHALL BE BONDED TO METAL ENCLOSURE (HANDHOLE, POST, MAST ARM, CONTROLLER, ETC.). GROUND ROD SHALL BE 3/4" DIA. x 10'-0" (20mm x 3.0m) LONG, COPPER CLAD. ONE GROUND ROD SHALL BE INSTALLED AT ALL POST FOUNDATIONS, POLE FOUNDATIONS, CONTROLLER CABINET FOUNDATION AND ELECTRICAL SERVICE INSTALLATION AS INDICATED ON THE CABLE PLAN. IF THERE ARE ANY SPECIAL CONDITIONS SUCH AS SUB-SURFACE CONDITIONS OR INSTALLATION PROBLEMS, THE RESIDENT ENGINEER SHALL BE NOTIFIED OR CONTACT THE BUREAU OF TRAFFIC, ILLINOIS DEPARTMENT OF TRANSPORTATION DISTRICT ONE AT (847) 705-4139.
2. THE NEUTRAL CONDUCTOR AND THE GROUND CONDUCTOR SHALL BE CONNECTED IN THE SERVICE INSTALLATION. AT NO OTHER POINT IN THE TRAFFIC SIGNAL SYSTEM SHALL THE NEUTRAL AND GROUND CONDUCTORS BE CONNECTED.
3. ALL EQUIPMENT GROUNDING CONDUCTORS SHALL TERMINATE AT THE GROUND BUS IN THE CONTROLLER CABINET.
4. THE CONTRACTOR SHALL PROVIDE A GROUND CABLE WITH CONNECTORS BETWEEN THE HANDHOLE COVER AND HANDHOLE FRAME.

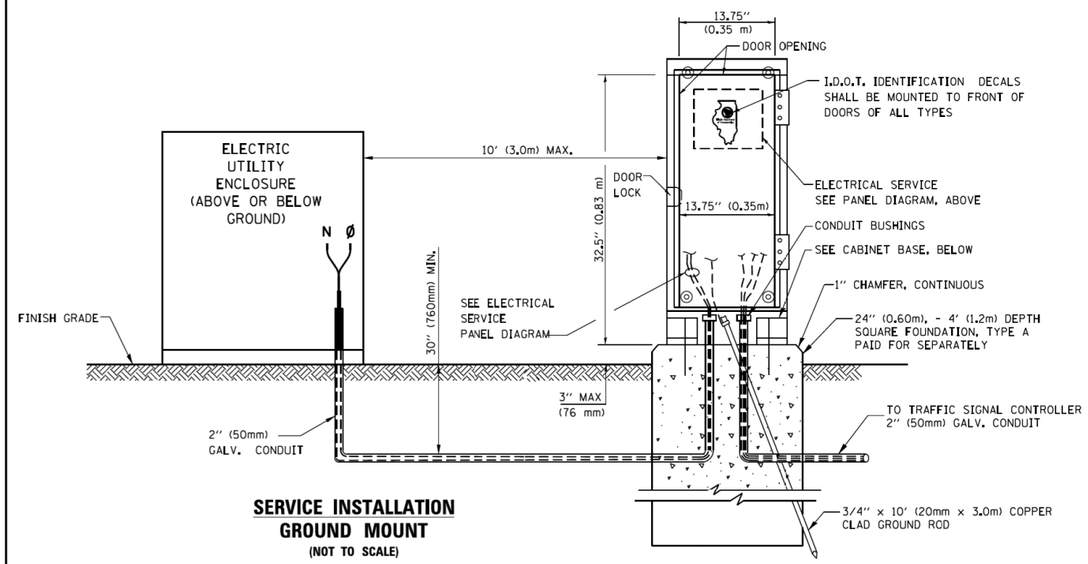

SERVICE INSTALLATION GROUND MOUNT
(NOT TO SCALE)

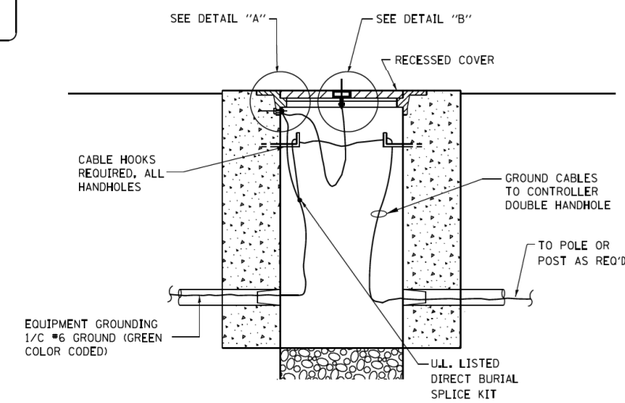

HANDHOLE COVER & FRAME – GROUNDING DETAIL
(NOT TO SCALE)

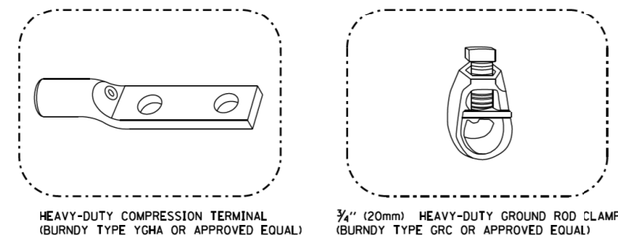

NOTES:

- ALL CLAMPS SHALL BE BRONZE OR COPPER, UL APPROVED.
- GROUND CABLE SHALL BE LOOPED OVER HOOKS IN THE HANDHOLES 6.5' (2.0m) SLACK SHALL BE PROVIDED IN SINGLE HANDHOLES 13' (4.0m) OF SLACK SHALL BE PROVIDED IN DOUBLE HANDHOLES. 5' (1.4m) OF SLACK SHALL BE PROVIDED BETWEEN FRAME AND COVER.

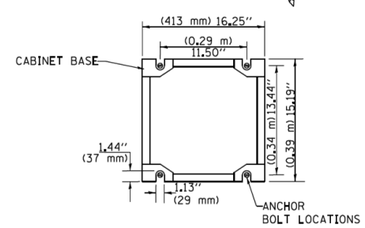

CABINET – BASE BOLT PATTERN
(NOT TO SCALE)

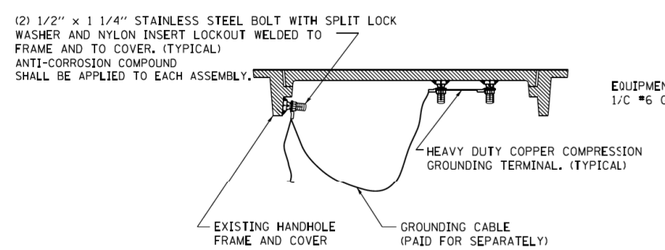

EXISTING HANDHOLE COVER & FRAME – GROUNDING DETAIL
(NOT TO SCALE)

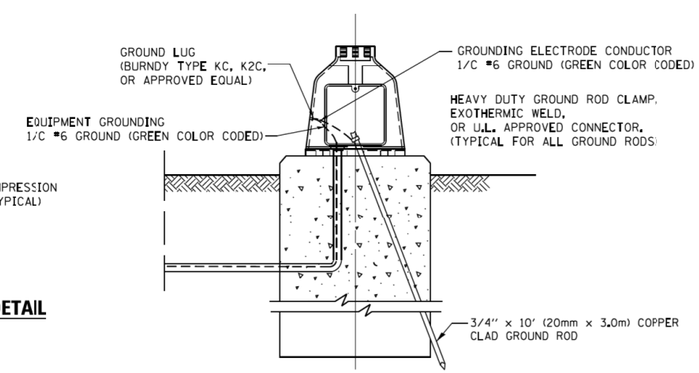

MAST ARM POLE / POST–GROUNDING DETAIL
(NOT TO SCALE)

COMPANY NAME:
PROJECT CONTACT:
CLIENT:
DATE PLOTTED: 10/15/2014 8:33:23 AM
FILE NAME: p9120113-sht-details-030-15054.dgn
PLOT DRIVER: pdf.plt
PEN TABLE: standard-trans-screen.tbl

FILE NAME = c:\pw_work\pwidot\footemj\d0108315\ts05.dgn	USER NAME = footemj	DESIGNED - DAD	REVISED - DAG 1-1-14
		DRAWN - BCK	REVISED -
	PLOT SCALE = 50.0000 ' / in.	CHECKED - DAD	REVISED -
	PLOT DATE = 1/13/2014	DATE - 10-28-09	REVISED -

STATE OF ILLINOIS
DEPARTMENT OF TRANSPORTATION

DISTRICT ONE
STANDARD TRAFFIC SIGNAL DESIGN DETAILS

SCALE: N.T.S. | SHEET NO. OF SHEETS | STA. TO STA.

F.A.P. RTE.	SECTION	COUNTY	TOTAL SHEETS	SHEET NO.
573	30-N(13)	KANE	219	123
	TS-05	CONTRACT NO. 60X70		
FED. ROAD DIST. NO.	ILLINOIS	FED. AID PROJECT		

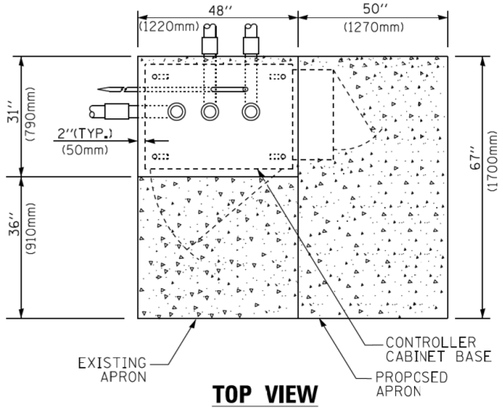

TOP VIEW

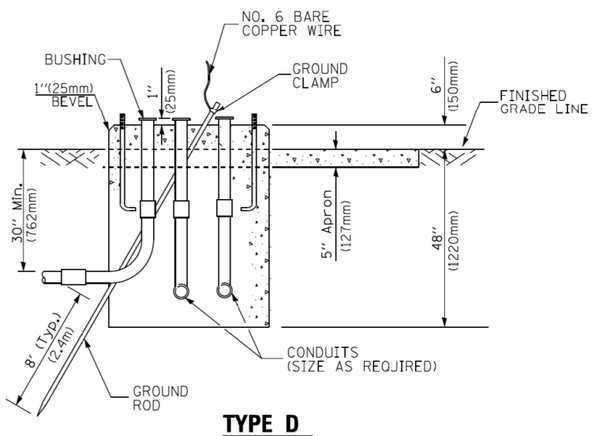

TYPE D
FOR GROUND MOUNTED
CONTROLLER CABINET
AND UPS BATTERY CABINET

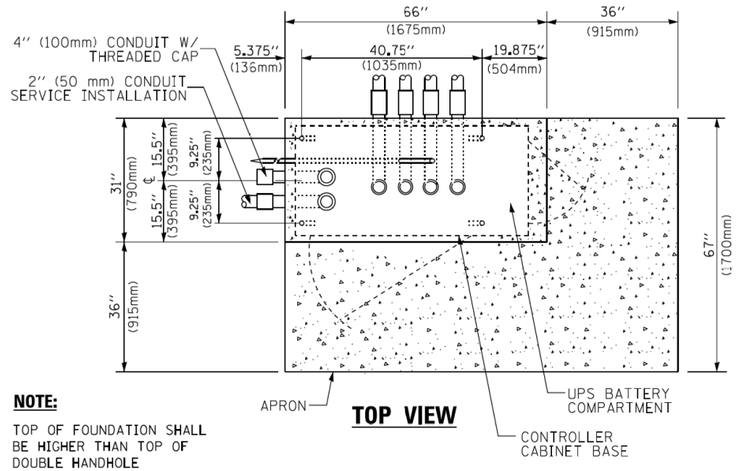

NOTE:

TOP OF FOUNDATION SHALL BE HIGHER THAN TOP OF DOUBLE HANDHOLE

TOP VIEW

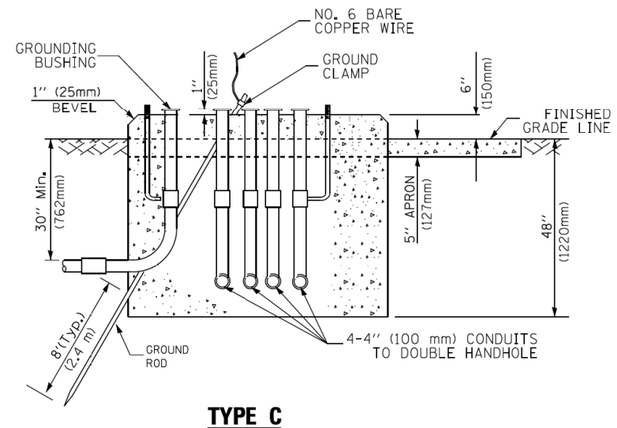

TYPE C
FOR GROUND MOUNTED
SUPER P (TYPE IV) AND SUPER R (TYPE V)
CONTROLLER CABINETS

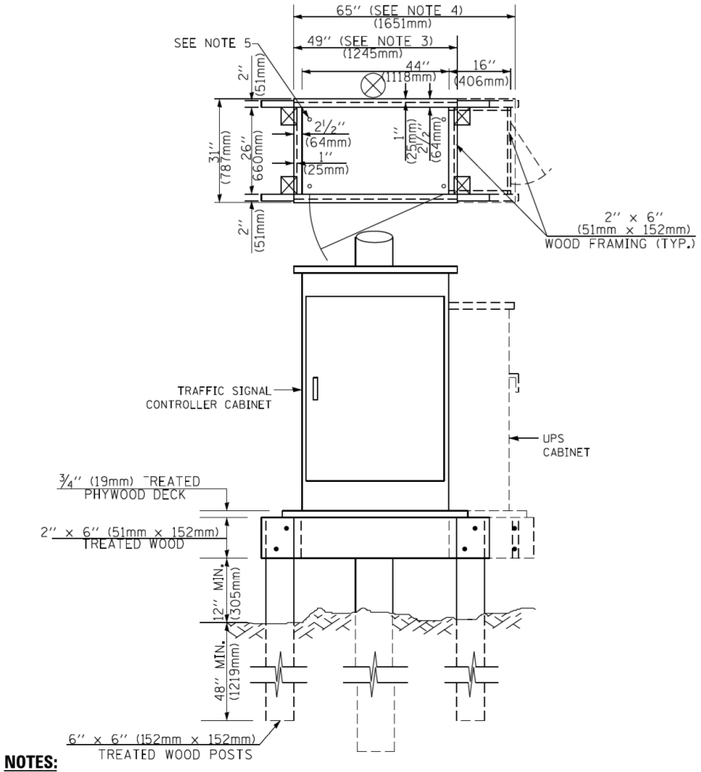

NOTES:

1. BASED ON CONTROLLER CABINET TYPE IV WITH BASE DIMENSIONS OF 26" x 44" (660mm x 1118mm). ADJUST PLATFORM SIZE TO FIT CABINET BASE DIMENSIONS BEING SUPPLIED
2. BASED ON UNINTERRUPTIBLE POWER SUPPLY CABINET WITH BASE DIMENSIONS OF 16" x 25" (406mm x 635mm). ADJUST PLATFORM SIZE TO FIT CABINET BASE DIMENSIONS BEING SUPPLIED.
3. PLATFORM SIZE FOR CONTROLLER CABINET TYPE IV.
4. PLATFORM SIZE FOR CONTROLLER CABINET TYPE IV AND UNINTERRUPTIBLE POWER SUPPLY CABINET.
5. DRILLED HOLES THROUGH THE PLATFORM BASE TO MATCH THE CONTROLLER CABINET BOLT TEMPLATE. FASTEN THE CONTROLLER CABINET TO THE PLATFORM WITH CARRIAGE BOLTS, WASHERS AND NUTS.
6. FASTEN ALL SUPPORT WOOD FRAMING TO THE WOOD POSTS WITH 2 LAG SCREWS FOR EACH CONNECTION..

TEMPORARY SIGNAL CONTROLLER
WOOD SUPPORT PLATFORM

CABLE SLACK LENGTH	FEET	METER
HANDHOLE	6.5	2.0
DOUBLE HANDHOLE	13.0	4.0
SIGNAL POST	2.0	0.6
MAST ARM	2.0	0.6
CONTROLLER CABINET	1.5	0.5
FIBER OPTIC AT CABINET	13.0	4.0
ELECTRIC SERVICE AT (CABINET OR SERVICE LOCATION)	1.5	0.5
GROUND CABLE (SIGNAL POST, MAST ARM, CABINET)	1.5	0.5
GROUND CABLE (BETWEEN FRAME AND COVER)	5.0	1.6

CABLE SLACK

VERTICAL CABLE LENGTH	FEET	METER
MAST ARM POLE (MAST ARM MOUNTED SIGNAL HEAD) (L = MAST ARM LENGTH - DISTANCE TO SIGNAL HEAD FROM END OF ARM)	20.0+L	6.0+L
BRACKET MOUNTED (MAST ARM POLE OR SIGNAL POLE)	13.0	4.0
PEDESTRIAN PUSH BUTTON	6.0	2.0
SERVICE INSTALLATION POLE MOUNT TO SERVICE DROP	13.5	4.1
SERVICE INSTALLATION POLE MOUNT TO GROUND	13.5	4.1
SERVICE INSTALLATION GROUND MOUNT	6.0	2.0
FOUNDATION (SIGNAL POST, MAST ARM POLE, CONTROLLER CABINET, SERVICE-GROUND MOUNT)	3.0	1.0

VERTICAL CABLE LENGTH

FOUNDATION	DEPTH
TYPE A - Signal Post	4'-0" (1.2m)
TYPE C - CONTROLLER W/ UPS	4'-0" (1.2m)
TYPE D - CONTROLLER	4'-0" (1.2m)
SERVICE INSTALLATION, GROUND MOUNT, TYPE A - SQUARE	4'-0" (1.2m)

DEPTH OF FOUNDATION

Mast Arm Length	① Foundation Depth	Foundation Diameter	Spiral Diameter	Quantity of Rebars	Size of Rebars
Less than 30' (9.1 m)	10'-0" (3.0 m)	30" (750mm)	24" (600mm)	8	6(19)
Greater than or equal to 30' (9.1 m) and less than 40' (12.2 m)	13'-6" (4.1 m)	30" (750mm)	24" (600mm)	8	6(19)
	11'-0" (3.4 m)	36" (900mm)	30" (750mm)	12	7(22)
Greater than or equal to 40' (12.2 m) and less than 50' (15.2 m)	13'-0" (4.0 m)	36" (900mm)	30" (750mm)	12	7(22)
Greater than or equal to 50' (15.2 m) and up to 55' (16.8 m)	15'-0" (4.6 m)	36" (900mm)	30" (750mm)	12	7(22)
Greater than or equal to 56' (16.8 m) and less than 65' (19.8 m)	21'-0" (6.4 m)	42" (1060mm)	36" (900mm)	16	8(25)
Greater than or equal to 65' (19.8 m) and up to 75' (22.9 m)	25'-0" (7.6 m)	42" (1060mm)	36" (900mm)	16	8(25)

NOTES:

1. These foundation depths are for sites which have cohesive soils (clayey silt, sandy clay, etc.) along the length of the shaft, with an average Unconfined Compressive Strength (Qu) > 1.0 tsf (100 kpa). This strength shall be verified by boring data prior to construction or with testing by the Engineer during foundation drilling. The Bureau of Bridges & structures should be contacted for a revised design if other conditions are encountered.
2. Combination mast arm assemblies under 55 feet (16.8 m) shall use 36" (900 mm) diameter foundations.
3. Combination mast arm assemblies under 56 feet (16.8 m) through 75 feet (22.9 m) shall use 42" (1060 mm) diameter foundations
4. For mast arm assemblies with dual arms refer to state standard 878001..

DEPTH OF MAST ARM FOUNDATIONS, TYPE E

COMPANY NAME:
PROJECT CONTACT:
CLIENT:
DATE PLOTTED: 10/15/2014 8:36:54 AM
FILE NAME: p912013-sht-details-031-1506a.dgn
PLOT DRIVER: pdf.pltr
PEN TABLE: standard-trans-screen.tbl

FILE NAME = c:\pw_work\pwidot\footemj\d0108315\ts05.dgn	USER NAME = footemj	DESIGNED - DAG	REVISED - DAG 1-1-14
		DRAWN - BCK	REVISED -
	PLOT SCALE = 50.0000 ' / in.	CHECKED - DAD	REVISED -
	PLOT DATE = 1/13/2014	DATE - 10-28-09	REVISED -

STATE OF ILLINOIS
DEPARTMENT OF TRANSPORTATION

DISTRICT ONE
STANDARD TRAFFIC SIGNAL DESIGN DETAILS

SCALE: N.T.S. | SHEET NO. OF SHEETS | STA. TO STA.

F.A.P. RTE.	SECTION	COUNTY	TOTAL SHEETS	SHEET NO.
573	30-N(13)	KANE	219	124
	TS-05	CONTRACT NO. 60X70		

FED. ROAD DIST. NO. | ILLINOIS | FED. AID PROJECT

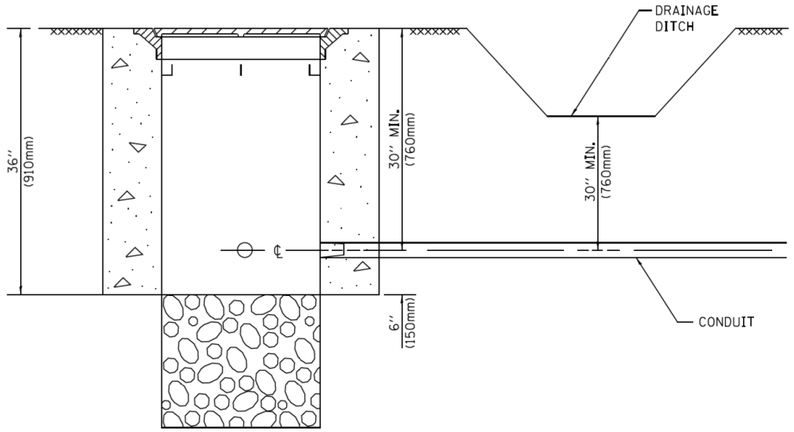

NOTES:

1. CONDUIT DEPTH SHALL BE A MINIMUM OF 30" (760mm) BELOW THE BOTTOM OF THE DRAINAGE DITCH OR ANY SLOPING GROUND
2. THE MINIMUM CONDUIT DEPTH APPLIES TO ALL CONDUIT PLACED UNDER ROADWAY PAVEMENT, MULTI-USE PATHS, SIDEWALKS AND SOIL SURFACES.
3. THE MINIMUM CONDUIT DEPTH APPLIES TO ALL HANDHOLES, HEAVY DUTY HANDHOLES AND DOUBLE HANDHOLES.

HANDHOLE WITH MINIMUM CONDUIT DEPTH

(NOT TO SCALE)

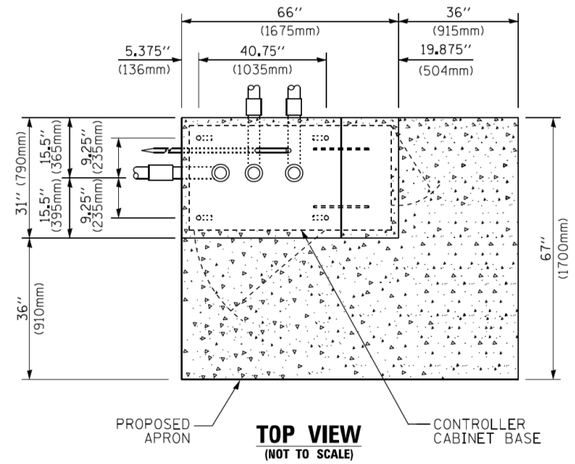

TOP VIEW

(NOT TO SCALE)

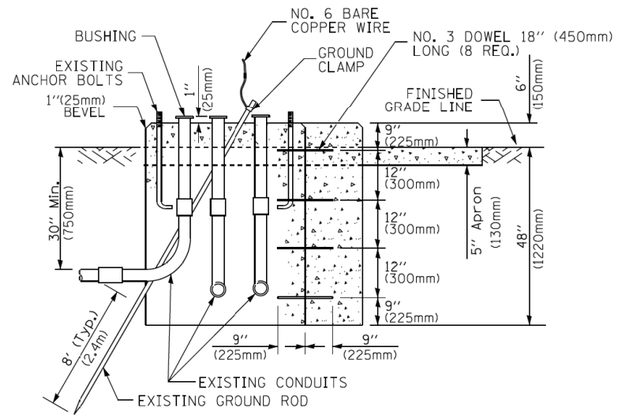

MODIFY EXISTING TYPE "D" FOUNDATION TO TYPE "C" FOUNDATION

(NOT TO SCALE)

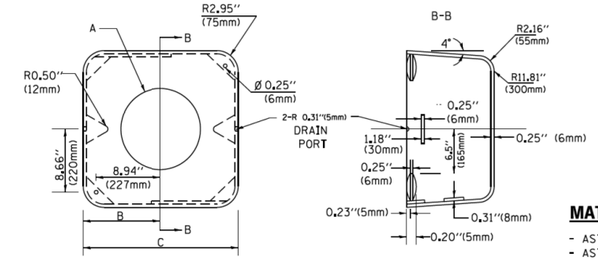

MATERIAL:

- ASTM A36 STEEL
- ASTM A-123 HOT DIPPED GALVANIZED

A	E	C	HEIGHT	WEIGHT
VARIES	9.5"(241mm)	19"(483mm)	7" (178mm) - 12" (300mm)	53 lbs (24kg)
VARIES	10.75"(273mm)	21.5"(546mm)	7" (178mm) - 12" (300mm)	68 lbs (31 kg)
VARIES	13.0"(330mm)	26"(660mm)	7" (178mm) - 12" (300mm)	81 lbs (37 kg)
VARIES	18.5"(470mm)	37"(940mm)	7" (178mm) - 12" (300mm)	126 lbs (57 kg)

SHROUD

NOTES:

1. DIMENSION "A" IS EQUAL TO THE DIAMETER OF THE MAST ARM POLE AT THE TOP OF THE SHROUD. THE SHROUD SHALL BE TIGHT TO THE MAST ARM POLE.
2. THE SUPPLIER SHALL VERIFIED THE ABOVE DIMENSIONS BASED ON MAST ARM REQUIREMENTS.
3. THE HEIGHT OF THE SHROUD SHALL COVER THE ANCHOR BOLTS, NUTS AND MAST ARM POLE BASE.

NOTE:

SUPPORT EXISTING CABINET AND CONTROL EQUIPMENT ABOVE FOUNDATION TO KEEP TRAFFIC SIGNAL FUNCTIONING WHILE FOUNDATION MODIFICATION WORK IS PROCEEDING.

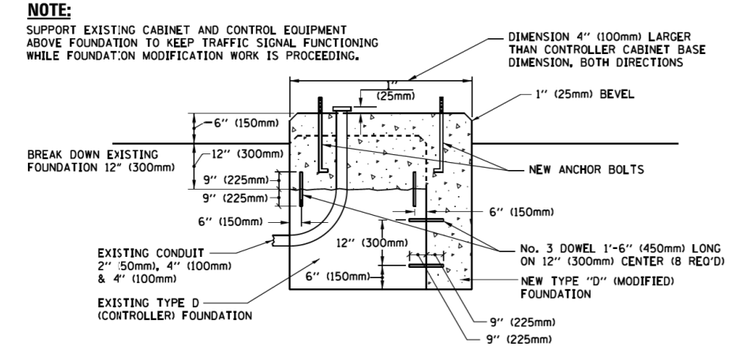

MODIFY EXISTING TYPE "D" FOUNDATION

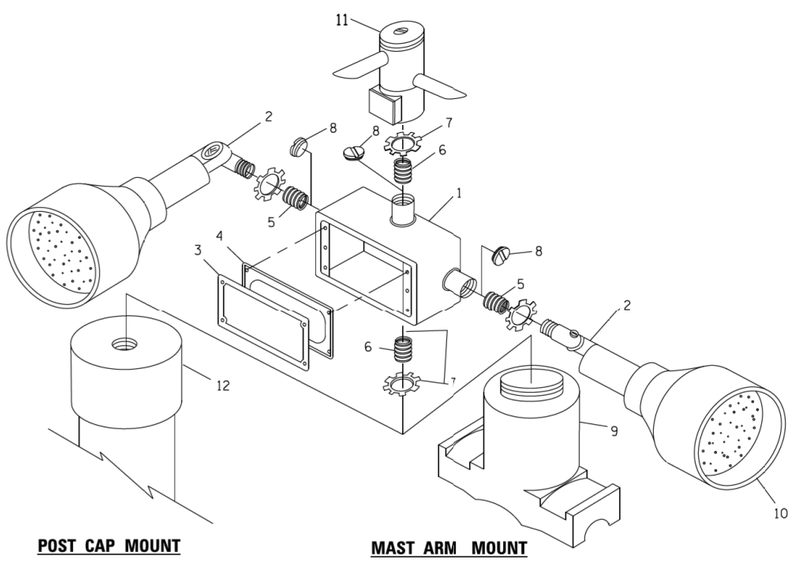

POST CAP MOUNT

MAST ARM MOUNT

EMERGENCY VEHICLE DETECTOR WITH CONFIRMATION BEACON MOUNTING DETAIL

ITEM NO.	IDENTIFICATION
1	OUTLET BOX- GALV. 21 CU.IN. (0.000344 CU-M)
2	LAMP HOLDER AND COVER
3	OUTLET BOX COVER
4	RUBBER COVER GASKET
5	REDUCING BUSHING
6	3/4"(19 mm) CLOSE NIPPLE
7	3/4"(19 mm) LOCKNUT
8	3/4"(19 mm) HOLE PLUG
9	SADDLE BRACKET - GALV.
10	6 WATT PAR 38 LED FLOOD LAMP
11	DETECTOR UNIT
12	POST CAP [18 FT. (5.4 m) POST MIN.]

NOTES:

1. ALL ELECTRICAL ITEMS, EXCEPT ITEMS #2 AND #11 SHALL BE ALUMINUM OR GALVANIZED
2. ITEM #1- OZ/GEDNEY FSX-1-50 OR EQUIVALENT
   ITEM #2- MULBERRY CON-O-SHADE LAMP SHIELD OR EQUIVALENT
   ITEM #9- "BAND-IT" SADDLE BRACKET OR EQUIVALENT
3. WHEN POST MOUNTING IS SPECIFIED, ITEM #9 SHALL NOT BE REQUIRED. THE DETECTION UNIT SHALL BE MOUNTED DIRECTLY ON TOP OF THE CAP BY DRILLING AND TAPPING A 3/4 "(19 mm) HOLE WITH PIPE THREADS. THE POST CAP SHALL EITHER BE SCREWED TO THE TOP OF THE POST OR A MINIMUM OF 3 TIGHTENING SCREWS SHALL BE REQUIRED ON EACH CAP.

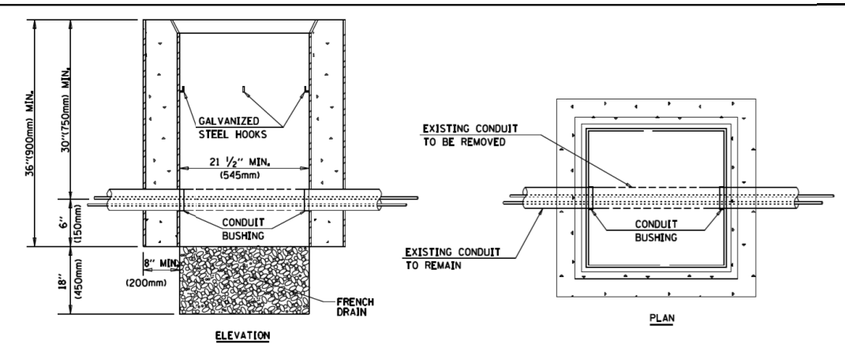

NOTES:

1. HANDHOLE CONSTRUCTED PER STATE STANDARD 814001.
2. REMOVAL OF THE EXISTING CONDUIT FROM THE HANDHOLE AND THE INSTALLATION OF THE CONDUIT BUSHINGS SHALL BE INCLUDED WITH THE COST OF THE HANDHOLE.

HANDHOLE TO INTERCEPT EXISTING CONDUIT

COMPANY NAME:
PROJECT CONTACT:
CLIENT:
DATE PLOTTED: 10/15/2014 8:39:47 AM
FILE NAME: p312013-sht-details-032-TS05f.dgn
PLOT DRIVER: pdf.pltr
PEN TABLE: standard-trans-screen.tbl

FILE NAME = c:\pw_work\pwidot\footemj\d0108315\ts05.dgn	USER NAME = footemj	DESIGNED - DAD	REVISED - DAG 1-1-14
		DRAWN - BCK	REVISED -
	PLOT SCALE = 50.0000 ' / in.	CHECKED - DAD	REVISED -
	PLOT DATE = 1/13/2014	DATE - 10-28-09	REVISED -

STATE OF ILLINOIS
DEPARTMENT OF TRANSPORTATION

DISTRICT ONE
STANDARD TRAFFIC SIGNAL DESIGN DETAILS

SCALE: N.T.S. | SHEET NO. OF SHEETS | STA. TO STA.

F.A.P. RTE.	SECTION	COUNTY	TOTAL SHEETS	SHEET NO.
573	30-N(13)	KANE	219	125
	TS-05	CONTRACT NO. 60X70		
FED. ROAD DIST. NO.	ILLINOIS	FED. AID PROJECT		

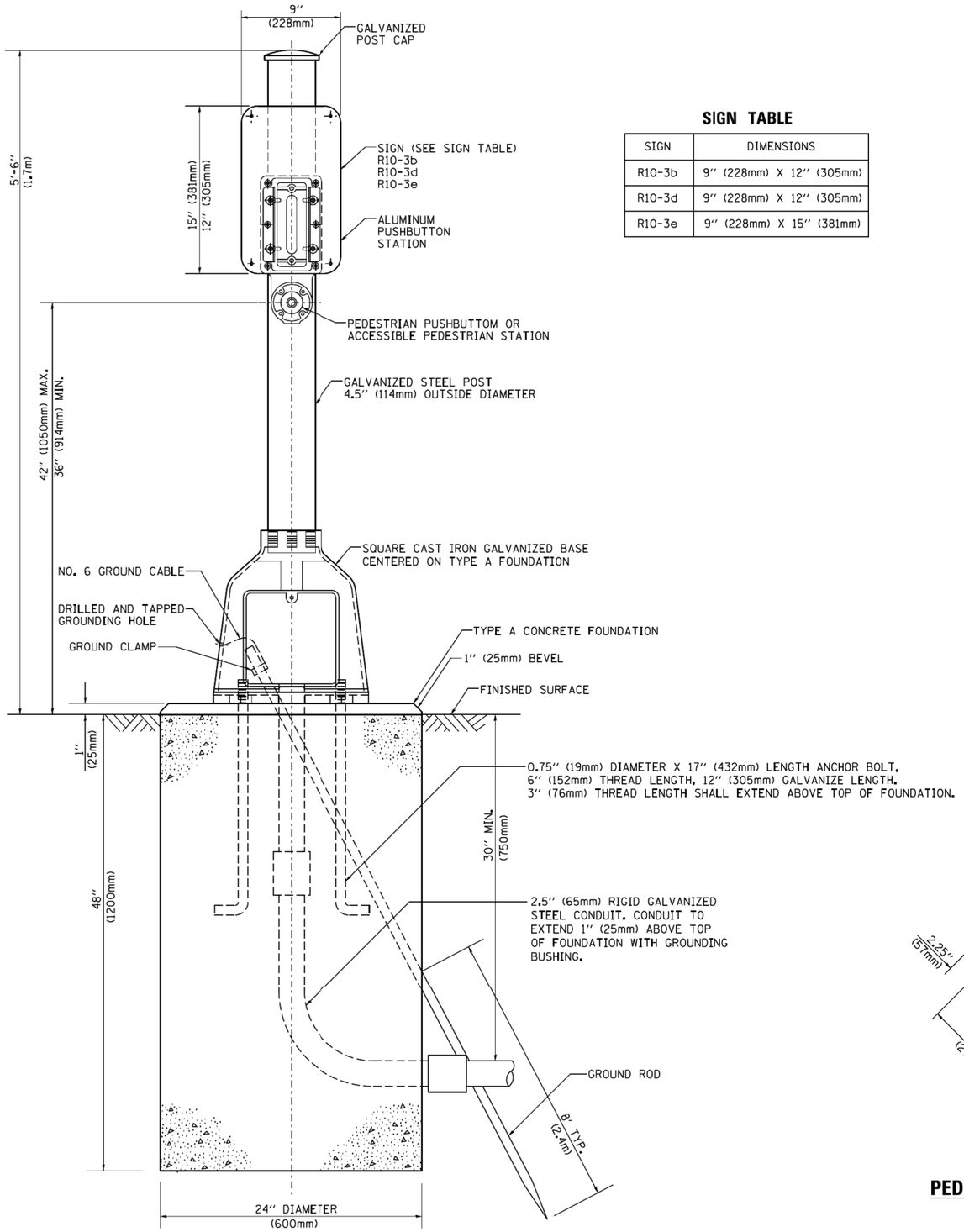

SIGN TABLE

SIGN	DIMENSIONS
R10-3b	9'' (228mm) X 12'' (305mm)
R10-3d	9'' (228mm) X 12'' (305mm)
R10-3e	9'' (228mm) X 15'' (381mm)

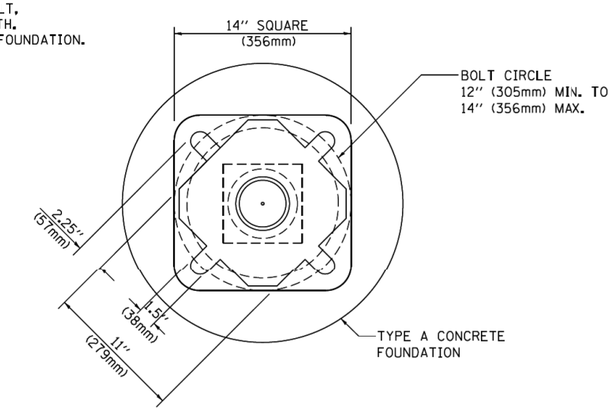

BOLT PATTERN

PEDESTRIAN PUSH BUTTON POST, TYPE A

COMPANY NAME:
PROJECT CONTACT:
CLIENT:
DATE PLOTTED: 10/15/2014 8:42:49 AM
FILE NAME: p912013-sh1-details-033-1505p.dgn
PLOT DRIVER: pdf.pltl
PEN TABLE: standard-trans-screen.tbl

FILE NAME = c:\pw_work\pwidot\footemj\d0108315\ts05.dgn	USER NAME = footemj	DESIGNED - DAG	REVISED - DAG 1-1-14
		DRAWN - GND	REVISED -
	PLOT SCALE = 50.0000 ' / in.	CHECKED - DAD	REVISED -
	PLOT DATE = 1/13/2014	DATE - 10/1/2012	REVISED -

STATE OF ILLINOIS
DEPARTMENT OF TRANSPORTATION

DISTRICT ONE
STANDARD TRAFFIC SIGNAL DESIGN DETAILS

SCALE: N.T.S. | SHEET NO. OF SHEETS | STA. TO STA.

F.A.P. RTE.	SECTION	COUNTY	TOTAL SHEETS	SHEET NO.
573	30-N(13)	KANE	219	126
	TS-05	CONTRACT NO. 60X70		
FED. ROAD DIST. NO.	ILLINOIS	FED. AID PROJECT		

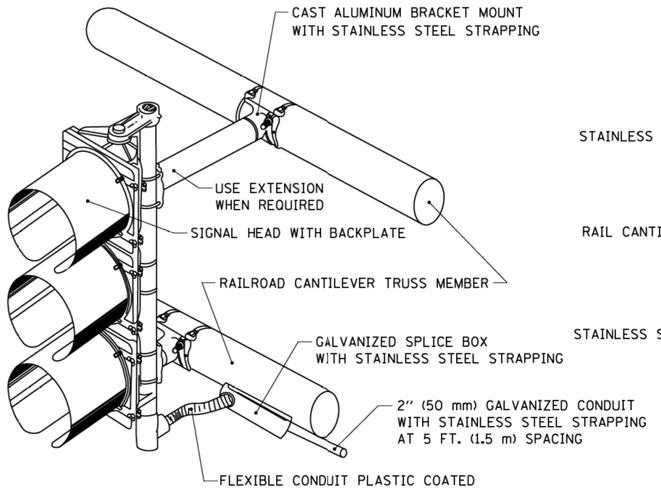

RAILROAD CANTILEVER SIGNAL HEAD MOUNTING

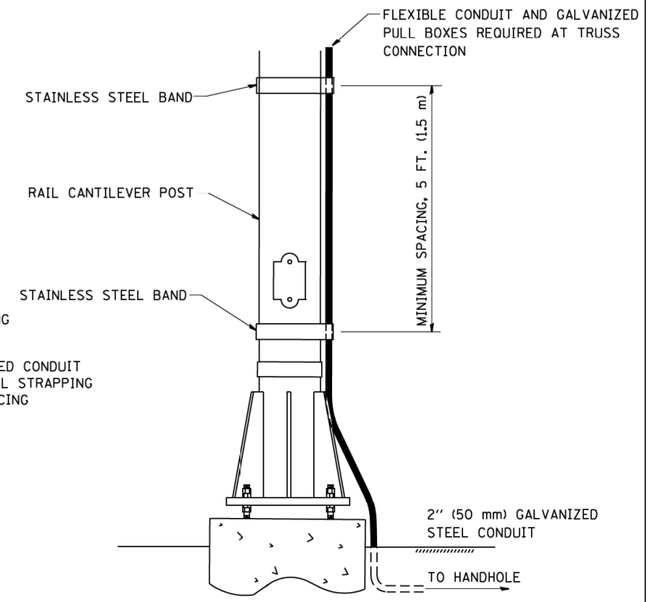

SIGNAL CONDUIT CONNECTION TO
RAIL CANTILEVER DETAIL

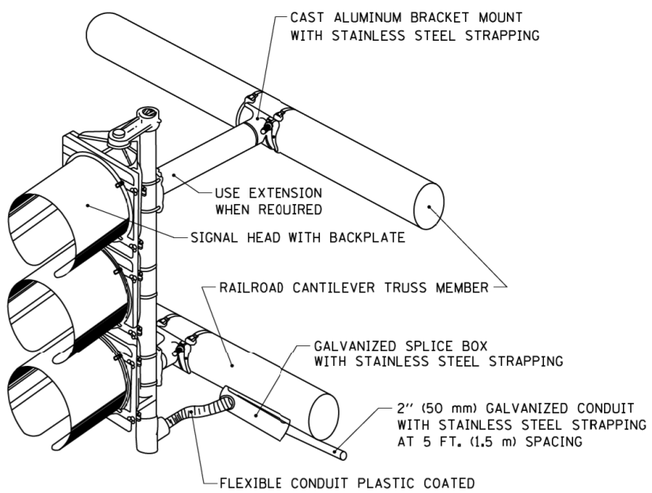

NOTE: USE NONCONDUCTIVE SPACERS BETWEEN THE TRAFFIC SIGNAL EQUIPTMENT AND THE RAILROAD CANTILEVER TO PREVENT DISSIMILAR METAL CORRSION.

RAILROAD CANTILEVER SIGNAL HEAD MOUNTING

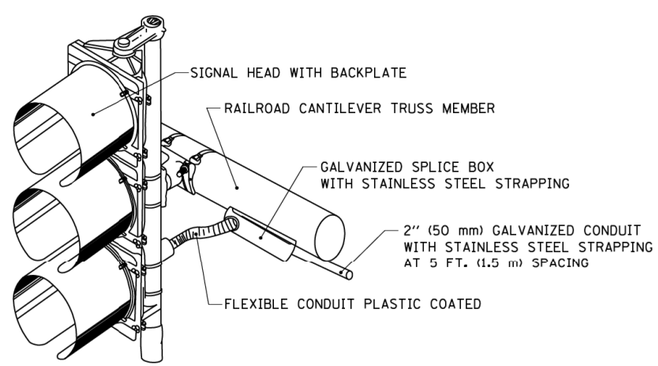

NOTE: USE NONCONDUCTIVE SPACERS BETWEEN THE TRAFFIC SIGNAL EQUIPTMENT AND THE RAILROAD CANTILEVER TO PREVENT DISSIMILAR METAL CORRSION.

RAILROAD CANTILEVER SIGNAL HEAD MOUNTING

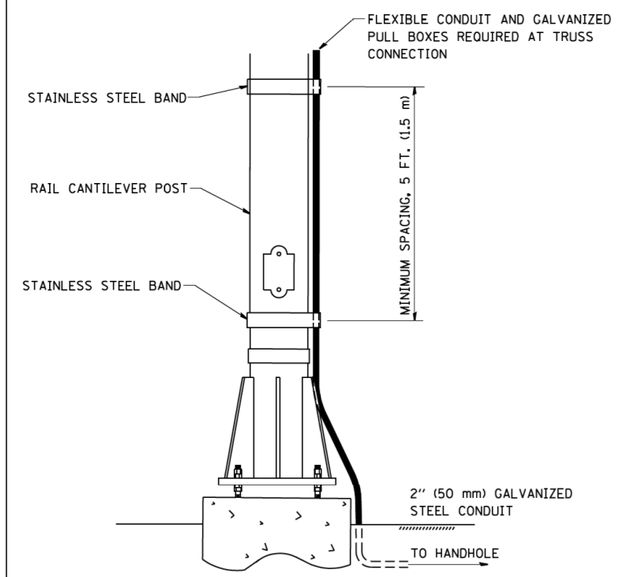

NOTE: USE NONCONDUCTIVE SPACERS BETWEEN THE TRAFFIC SIGNAL EQUIPTMENT AND THE RAILROAD CANTILEVER TO PREVENT DISSIMILAR METAL CORRSION.

SIGNAL CONDUIT CONNECTION TO
RAIL CANTILEVER DETAIL

COMPANY NAME:
PROJECT CONTACT:
CLIENT:
DATE PLOTTED: 10/15/2014 8:45:03 AM
FILE NAME: p312013-sht-details-034-TS06.dgn
PLOT DRIVER: pdf.pltt
PEN TABLE: standard-trans-screen.tbl

FILE NAME = Wi\diststd\22x34\ts06.dgn	USER NAME = gaglianobt	DESIGNED -	REVISED -
		DRAWN -	REVISED -
	PLOT SCALE = 50.0000 ' / IN.	CHECKED -	REVISED -
	PLOT DATE = 1/4/2008	DATE -	REVISED -

STATE OF ILLINOIS
DEPARTMENT OF TRANSPORTATION

RAILROAD CANTILEVER
SIGNAL HEAD MOUNTING DETAIL

SCALE: N.T.S. | SHEET NO. OF SHEETS | STA. TO STA.

F.A.P. RTE.	SECTION	COUNTY	TOTAL SHEETS	SHEET NO.
573	30-N(13)	KANE	219	127
	TS-06	CONTRACT NO. 60X70		
FED. ROAD DIST. NO.	ILLINOIS	FED. AID PROJECT		

Bench Mark: #5 - Chiseled square in the center of 12" headwall on the North side of U.S. Route 30 approximately ±2,700' East of Dugan Rd., Elevation 686.03.

Existing Structure: S.N. 045-2030 is a 12'x4.5' R.C. box culvert, 44'-0" edge-to-edge pavement with a culvert length of 45'-2". Built in 1948. A 1'-2" thick slab was added to the top in 2004. Staged construction will be utilized to maintain one lane of traffic in each direction at all times.

No salvage.

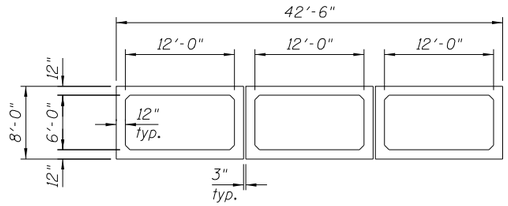

SECTION THRU PRECAST CULVERT BARRELS

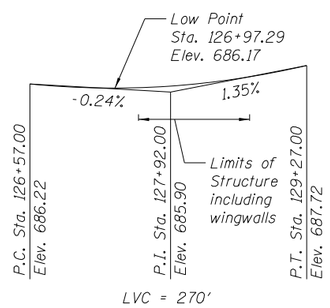

PROFILE GRADE

(along ℄ roadway)

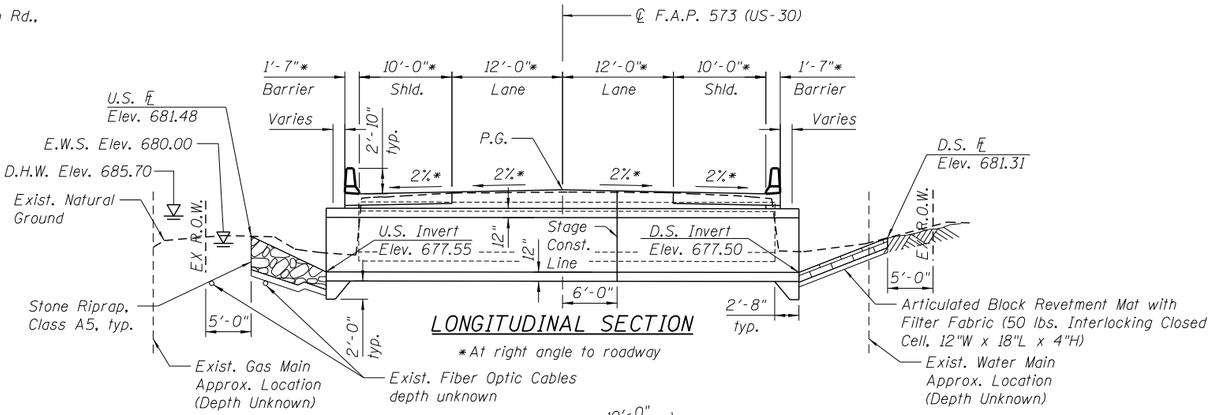

LONGITUDINAL SECTION

*At right angle to roadway

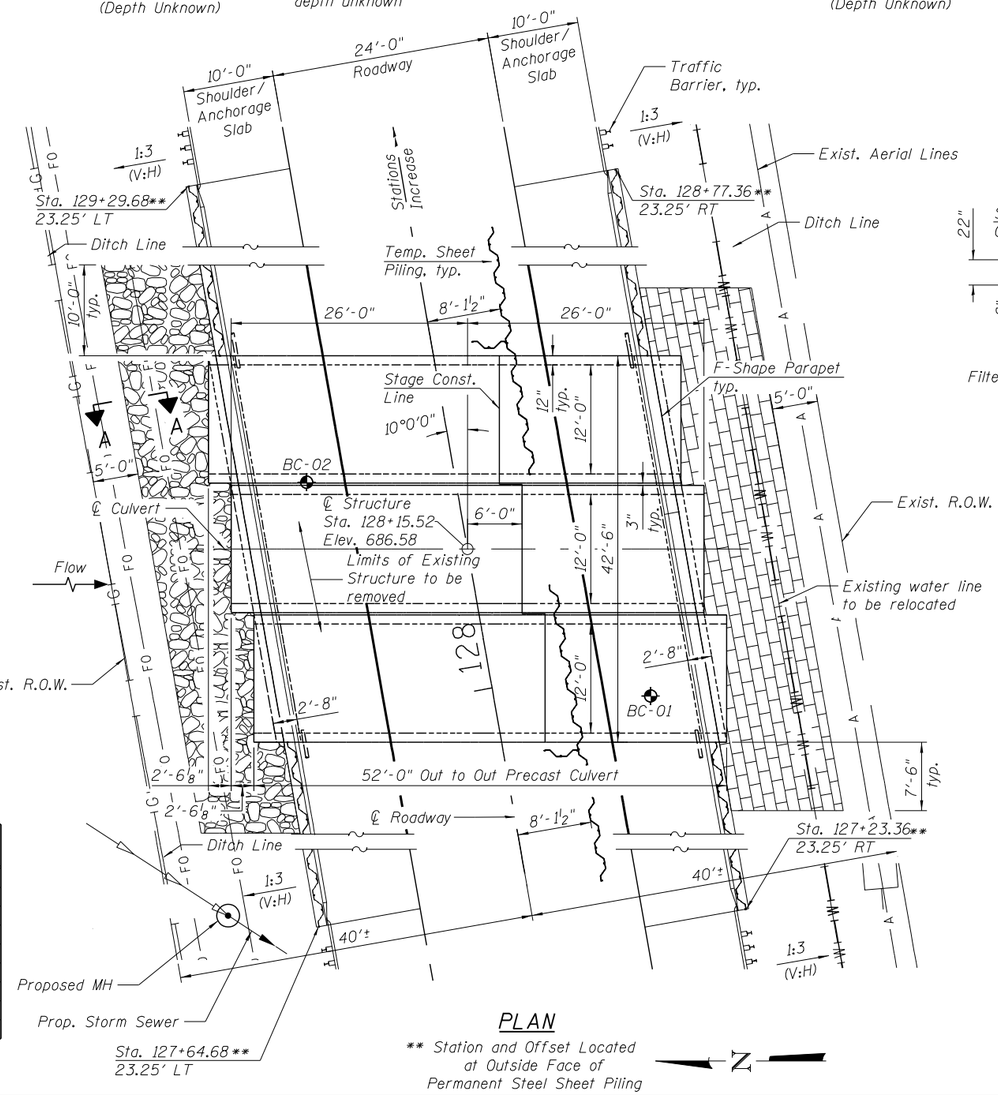

PLAN

** Station and Offset Located at Outside Face of Permanent Steel Sheet Piling

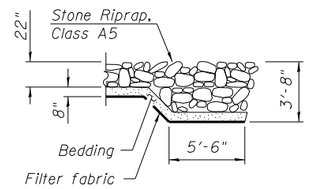

SECTION A-A

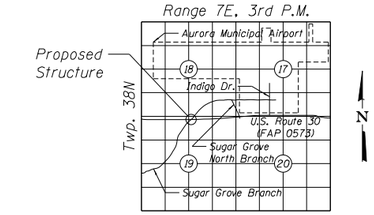

LOCATION SKETCH

LOADING HL-93

Allow 50#/sq. ft. for Future Wearing Surface.

DESIGN SPECIFICATIONS

2013 Interim Revisions to AASHTO LRFD Bridge Design Specifications, Customary U.S. Units, 6th Edition

DESIGN STRESSES

FIELD UNITS

f'c = 3,500 psi
fy = 60,000 psi (Reinforcement)

PRECAST UNITS

f'c = 5,000 psi
fy = 65,000 psi (Welded Wire Fabric)

LEGEND

- Soil boring location

DESIGN SCOUR ELEVATION TABLE

Design Scour Elevation (ft.)	D.S.	U.S.
	674.50	674.55

WATERWAY INFORMATION

Drainage Area = 4.3 Sq. Mi.

Existing Low Grade Elev. 686.01 @ Sta. 127+50
Proposed Low Grade Elev. 686.18 @ Sta. 127+00

Flood	Freq. Yr.	Q C.F.S.	Opening Sq. Ft. Exist.	Opening Sq. Ft. Prop.	Nat. H.W.E.	Head - Ft. Exist.	Head - Ft. Prop.	Headwater El. Exist.	Headwater El. Prop.
Ten-Year	10	326	48	166	683.6	1.3	0.2	684.9	683.8
Design	50	545	54	166	685.4	1.1	0.3	686.5	685.7
Base	100	661	54	166	686.9	0.0	0.0	686.9	686.9
Ex. Overtopping	--	417	54	--	684.5	2.1	--	686.6	--
Pr. Overtopping	--	593	--	166	685.9	--	0.3	--	686.2
Max. Calc.	500	922	54	166	689.1	0.1	0.0	689.2	689.1
Two-Year	2	267	40	149	683.1	1.0	0.1	684.1	683.2

10-Year Velocity through Existing Culvert = 6.9 FPS
10-Year Velocity through Proposed Culvert = 2.0 FPS

To the best of my knowledge, information and belief, this culvert design is structurally adequate for the design loading shown on the plans. The design is an economical one for the style of structure and complies with the requirements of the current "AASHTO Standard Specifications for Highway Bridges".

08-15-2014

Structural Engineer — Expires: 11/30/2014
HRGreen

STATE OF ILLINOIS — ROBERT C. DAVIES — 081-004666 — McHENRY, IL — LICENSED STRUCTURAL ENGINEER

GENERAL PLAN
ROUTE US-30 OVER SUGAR GROVE BRANCH
F.A.P. ROUTE 573 - SEC. 30-N (13)
KANE COUNTY
STATION 128+15.52
STRUCTURE NO. 045-2121

COMPANY NAME:
PROJECT CONTACT:
CLIENT:
DATE PLOTTED: 10/14/2014 8:26:04 PM
FILE NAME: 0452121-p9120113-gpa-001.dgn
PLOT DRIVER: pdf.pit
PEN TABLE: standard-trans.tbl

HRGreen — HRGreen.com — Illinois Professional Design Firm # 184-001322

USER NAME = dstancz	DESIGNED - SEC	REVISED -	
	CHECKED - RGB	REVISED -	
PLOT SCALE =	DRAWN - WJH	REVISED -	
PLOT DATE = 10/14/2014	CHECKED - RGB	REVISED -	

STATE OF ILLINOIS
DEPARTMENT OF TRANSPORTATION

SHEET NO. SW-1 OF SW-6 SHEETS

F.A.P. RTE.	SECTION	COUNTY	TOTAL SHEETS	SHEET NO.
	30-N(13)	KANE	219	128

CONTRACT NO. 60X70

ILLINOIS FED. AID PROJECT

GENERAL NOTES

1. Precast concrete culverts, 12'x6' shall conform to the requirements of Article 540.06 of the Standard Specifications, and the applicable requirements of AASHTO M 273 and ASTM C1577-14.

   The minimum precast concrete strength shall be 5,000 psi.

   Lifting holes shall be filled with concrete plugs and mastic after box sections are in place.

   Fill varies from 1'-0" to 2'-0" within limits of roadway.

2. Contractor shall maintain ditch flows in accordance with the Standard Specifications Article 502.

3. Reinforcement bars designated (E) shall be epoxy coated

4. See Airport General Notes for limiting equipment height.

5. Removal of Existing Structures No. 1 includes the removal of the existing 45'-2" long, 12'x4.5' concrete box culvert as well as the placement and removal of any temporary measures to maintain flow during Staged Construction. Existing culvert consists of 2'-0" (±) thick top, 9" (±) thick walls and 11" thick invert, wingwalls and headwall.

6. If the Contractor chooses to alter the temporary cantilevered sheet piling design requirements shown on the plans, a design submittal including plan details and calculations will be required for review and acceptance by the Engineer.

7. The Contractor shall submit a temporary soil retention system design including plan details and calculations for review and acceptance by the Engineer where Temporary Soil Retention System is indicated.

8. If over excavation is required beneath the proposed culvert due to unsuitable soils as determined by the engineer, the backfill shall consist of Rock Fill. Work will be paid for at the contract unit price for Removal and Disposal of Unsuitable Material for Structures and Rock Fill.

9. Excavation and backfill required for the placement of the Precast Concrete Box Culvert shall be in accordance with Article 540.06 and the details in the plans. Cost included in Precast Box Culverts 12'x6'.

TOTAL BILL OF MATERIAL

ITEM	UNIT	TOTAL
STONE RIPRAP, CLASS A5	SQ YD	76
FILTER FABRIC	SQ YD	155
ARTICULATED BLOCK REVETMENT MAT	SQ YD	79
REMOVAL OF EXISTING STRUCTURES NO. 1	EACH	1
STRUCTURE EXCAVATION	CU YD	99.3
CONCRETE STRUCTURES	CU YD	10.7
CONCRETE SUPERSTRUCTURE	CU YD	218.2
PROTECTIVE COAT	SQ YD	505
REINFORCEMENT BARS, EPOXY COATED	POUND	27,140
EXPANSION BOLTS 5/8 INCH	EACH	88
PRECAST CONCRETE BOX CULVERTS 12' X 6'	FOOT	156
PERMANENT STEEL SHEET PILING	SQ FT	3160
GRANULAR BACKFILL FOR STRUCTURES	CU YD	99.3
TEMPORARY SHEET PILING	SQ FT	1504
PIPE UNDERDRAINS FOR STRUCTURES 4"	FOOT	233
TEMPORARY SOIL RETENTION SYSTEM	SQ FT	115

10. Anchorage slab and parapet shall be paid for under Concrete Superstructures and Reinforcement Bars, Epoxy Coated. Reinforcement bars shall be placed in accordance with Section 508. Class SI Concrete shall be used for Slab and Parapet. Slab and Parapet shall be formed, placed and consolidated in accordance with Section 503. Traffic surface shall be struck off, finished and cured according to Section 408 including Type B finish as noted in Article 420.09 (e)(2).

11. Slip-forming of the parapets is not allowed.

CONSTRUCTION SEQUENCE

STAGE I

1. Construct Temporary Embankment, extend existing culverts
2. Construct Temporary Pavement
3. Drive Temporary Sheet Pile and Temporary Soil Retention
4. Drive Permanent Sheet Pile, North Side
5. Excavate for Culverts
6. Over excavate unsuitable materials and place Rock Fill if required
7. Construct Toe Wall
8. Place grout on top of Toe Wall as Precast Box Culvert End Section is set on bedding.
9. Drill and Grout dowels. Drill Expansion Bolts.
10. Construct Anchorage Slab and Parapet
11. Set Stage II Temporary Sheet Pile

STAGE II

1. Place Traffic Barrier move traffic, remove traffic barriers from Stage II Construction Area
2. Remove section of Temporary Sheet Pile
3. Excavate and place culvert (steps 5-9 above)
4. Construct Anchorage Slab and pavement
5. Remove remaining Temporary Sheet Pile and Soil Retention

INDEX OF SHEETS

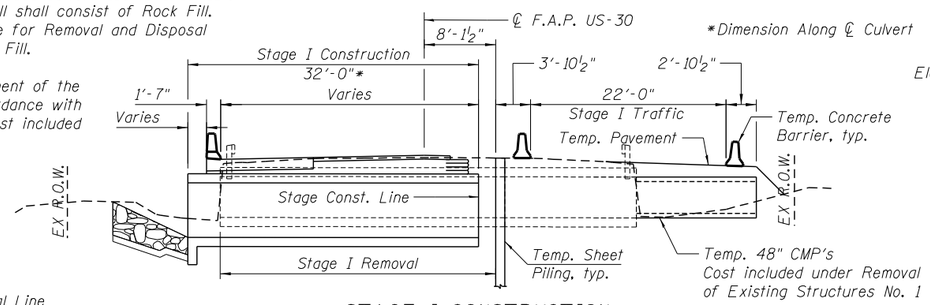

STAGE I CONSTRUCTION

(Looking East)
(Dimensions shown are at right angle to ℄ roadway unless noted)

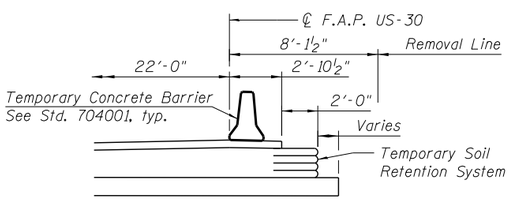

TEMPORARY SOIL RETENTION SYSTEM

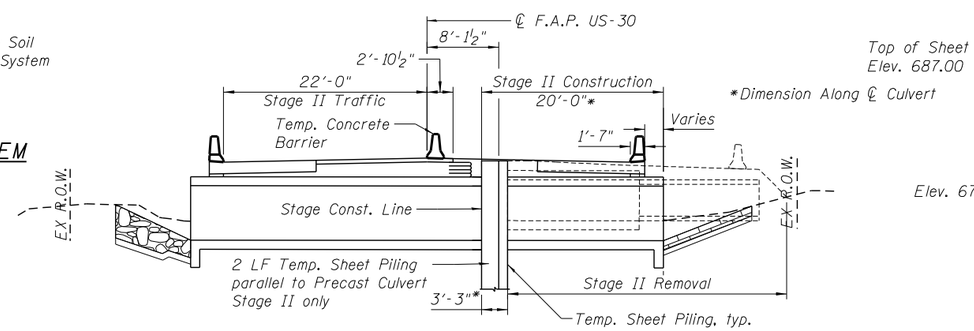

STAGE II CONSTRUCTION

(Looking East)
(Dimensions shown are at right angle to ℄ roadway unless noted)

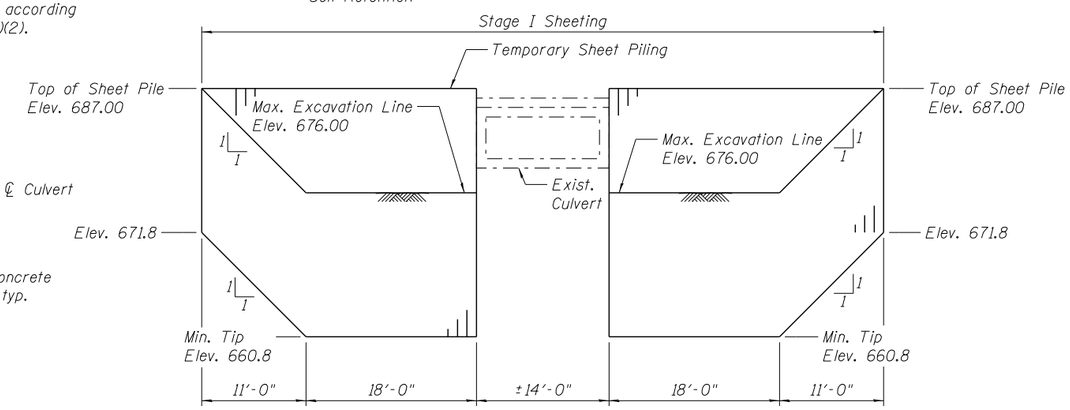

TEMPORARY SHEET PILING STAGE I DETAIL

Min. Section Modulus = 18 in³/ft

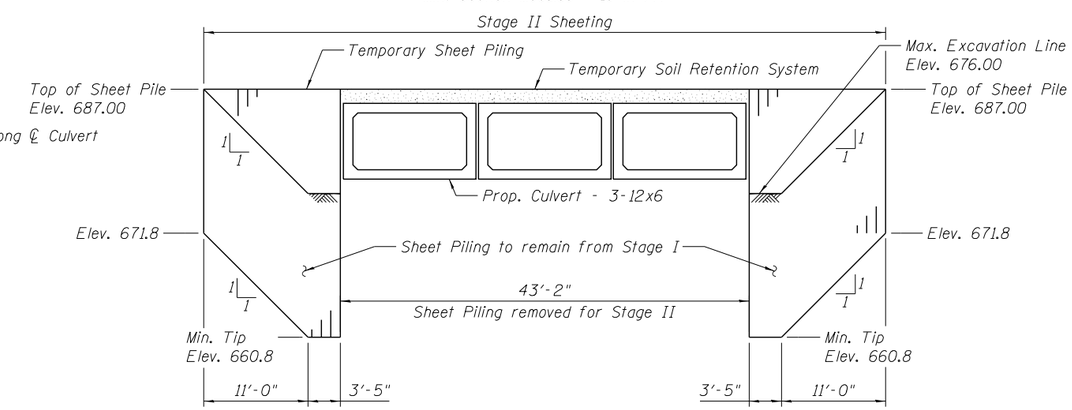

TEMPORARY SHEET PILING STAGE II DETAIL

Min. Section Modulus = 18 in³/ft

COMPANY NAME:
PROJECT CONTACT:
CLIENT:
DATE PLOTTED: 10/14/2014 8:26:09 PM
FILE NAME: 045-2121-2912013-gen-001.dgn
PLOT DRIVER: pdf.plt
PEN TABLES: standard-trans.tbl

HRGreen
HRGreen.com
Illinois Professional Design Firm # 184-001322

USER NAME = dstancz	DESIGNED - SEC	REVISED -	
	CHECKED - RGB	REVISED -	
PLOT SCALE =	DRAWN - WJH	REVISED -	
PLOT DATE = 10/14/2014	CHECKED - RGB	REVISED -	

STATE OF ILLINOIS
DEPARTMENT OF TRANSPORTATION

GENERAL NOTES AND BILL OF MATERIALS
STRUCTURE NO. 045-2121

SHEET NO. SW-2 OF SW-6 SHEETS

F.A.P. RTE.	SECTION	COUNTY	TOTAL SHEETS	SHEET NO.
	30-N(13)	KANE	219	129
		CONTRACT NO. 60X70		
		ILLINOIS FED. AID PROJECT		

Notes:

1. Offsets measured to the outside face of Permanent Steel Sheet Piling
2. Outlet 4" dia. Perf. Pipe Drain through formed hole in Precast Concrete Box Culvert. Outlet Elev. 678.50
3. Slope 4" dia. Perf. Pipe Drain at min. $\frac{1}{4}$"/ft to outlet.
4. Permanent Steel Sheet Piling designed to account for the Anchorage Slab's bearing pressure surcharge of 1.0 ksf and horizontal sliding force of 0.5 kips/ft. of wall.

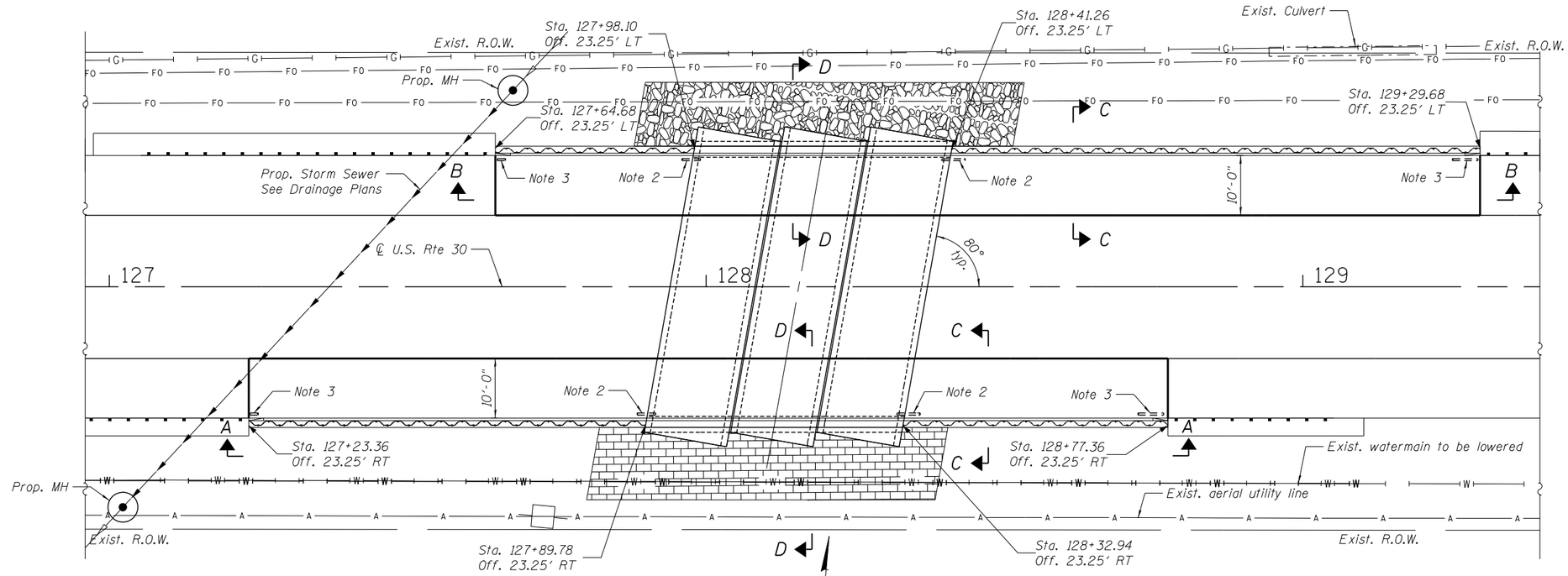

PERMANENT STEEL SHEET PILE DATA

Min. Section Modulus = 12.5 in^3/ft
Min. Thickness = $\frac{5}{16}$"
Min. Yield Strength = 50 ksi

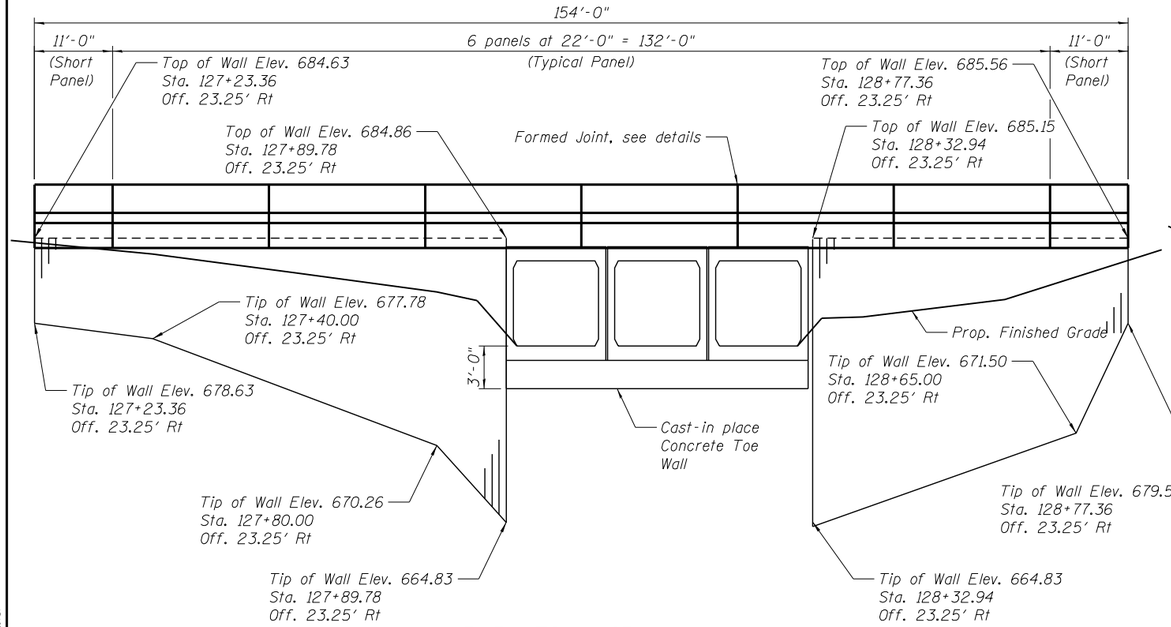

ELEVATION VIEW A-A

Looking at Outside Face

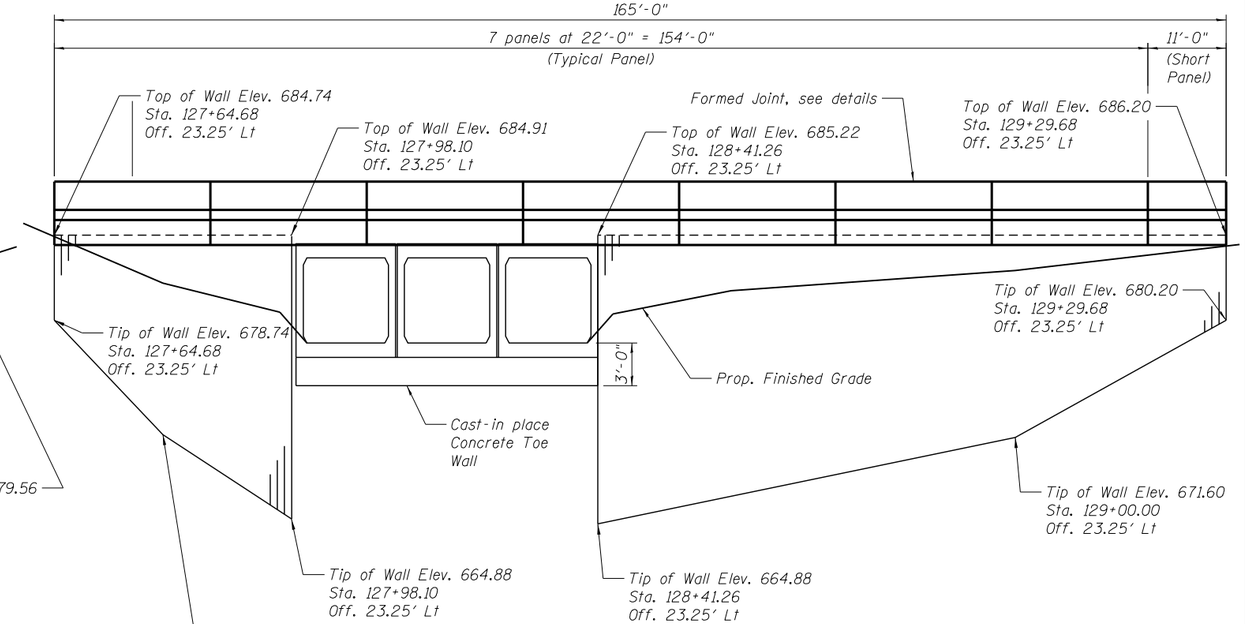

ELEVATION VIEW B-B

Looking at Inside Face

COMPANY NAME:
PROJECT CONTACT:
CLIENT:
DATE PLOTTED: 10/14/2014 8:26:16 PM
FILE NAME: 0452121-p91201l3-wall-001.dgn
PLOT DRIVER: pdf.pltl
PEN TABLE: standard-trans.tbl

HRGreen.com Illinois Professional Design Firm # 184-001322	USER NAME = dstancz	DESIGNED - SEC	REVISED -
		CHECKED - RGB	REVISED -
	PLOT SCALE =	DRAWN - WJH	REVISED -
	PLOT DATE = 10/14/2014	CHECKED - RGB	REVISED -

STATE OF ILLINOIS
DEPARTMENT OF TRANSPORTATION

STEEL SHEET PILE WALL DETAILS
STRUCTURE NO. 045-2121

SHEET NO. SW-3 OF SW-6 SHEETS

F.A.P. RTE.	SECTION	COUNTY	TOTAL SHEETS	SHEET NO.
	30-N(13)	KANE	219	130
		CONTRACT NO. 60X70		
	ILLINOIS	FED. AID PROJECT		

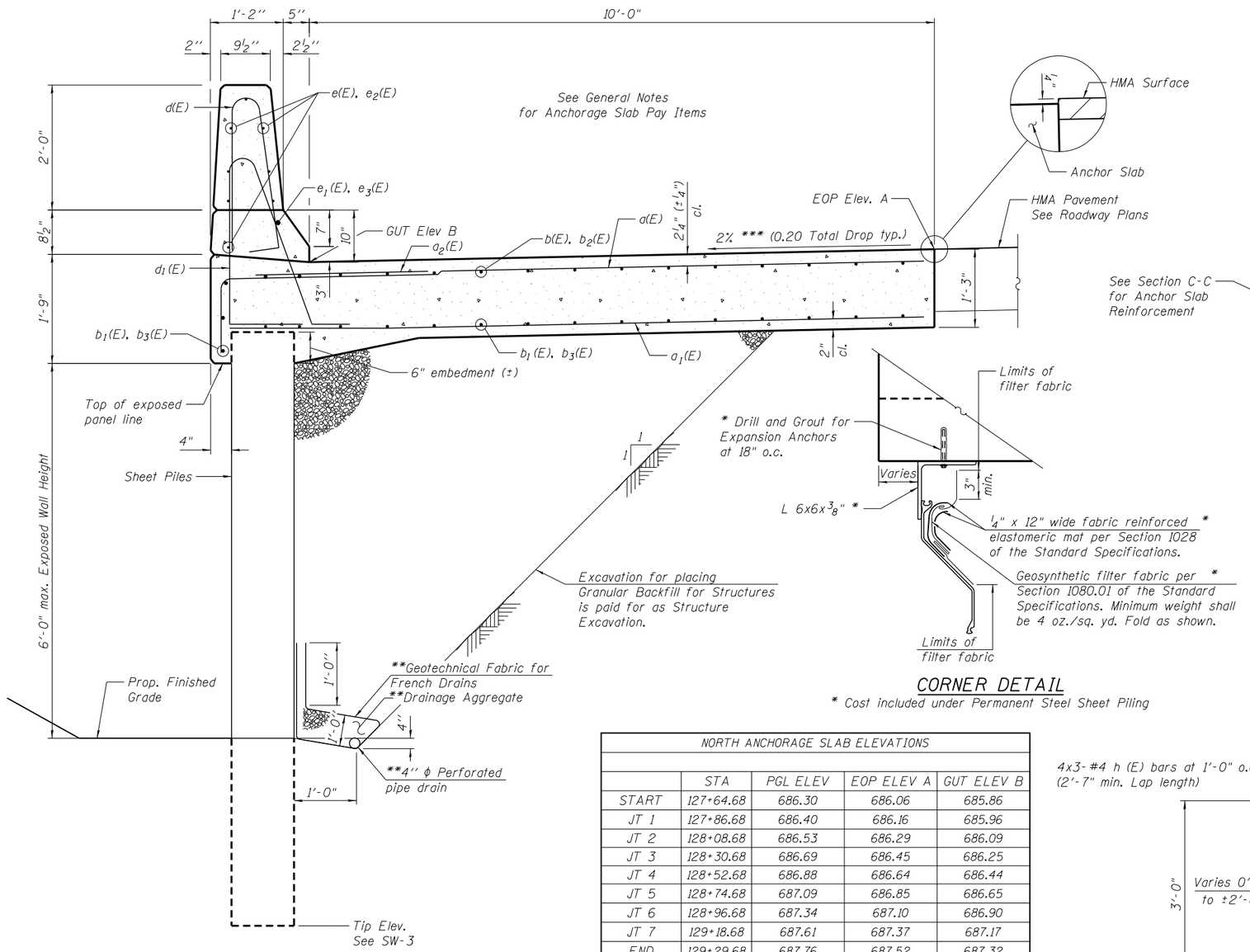

SECTION C-C

CORNER DETAIL

* Cost included under Permanent Steel Sheet Piling

NORTH ANCHORAGE SLAB ELEVATIONS				
	STA	PGL ELEV	EOP ELEV A	GUT ELEV B
START	127+64.68	686.30	686.06	685.86
JT 1	127+86.68	686.40	686.16	685.96
JT 2	128+08.68	686.53	686.29	686.09
JT 3	128+30.68	686.69	686.45	686.25
JT 4	128+52.68	686.88	686.64	686.44
JT 5	128+74.68	687.09	686.85	686.65
JT 6	128+96.68	687.34	687.10	686.90
JT 7	129+18.68	687.61	687.37	687.17
END	129+29.68	687.76	687.52	687.32

SOUTH ANCHORAGE SLAB ELEVATIONS				
	STA	PGL ELEV	EOP ELEV A	GUT ELEV B
START	127+23.36	686.19	685.95	685.75
JT 1	127+34.36	686.21	685.97	685.77
JT 2	127+56.36	686.27	686.03	685.83
JT 3	127+78.36	686.36	686.12	685.92
JT 4	128+00.36	686.48	686.24	686.04
JT 5	128+22.36	686.63	686.39	686.19
JT 6	128+44.36	686.80	686.56	686.36
JT 7	128+66.36	687.01	686.77	686.57
END	128+77.36	687.12	686.88	686.68

** Included in the cost of Pipe Underdrains for Structures
*** Perpendicular to P.G.L.

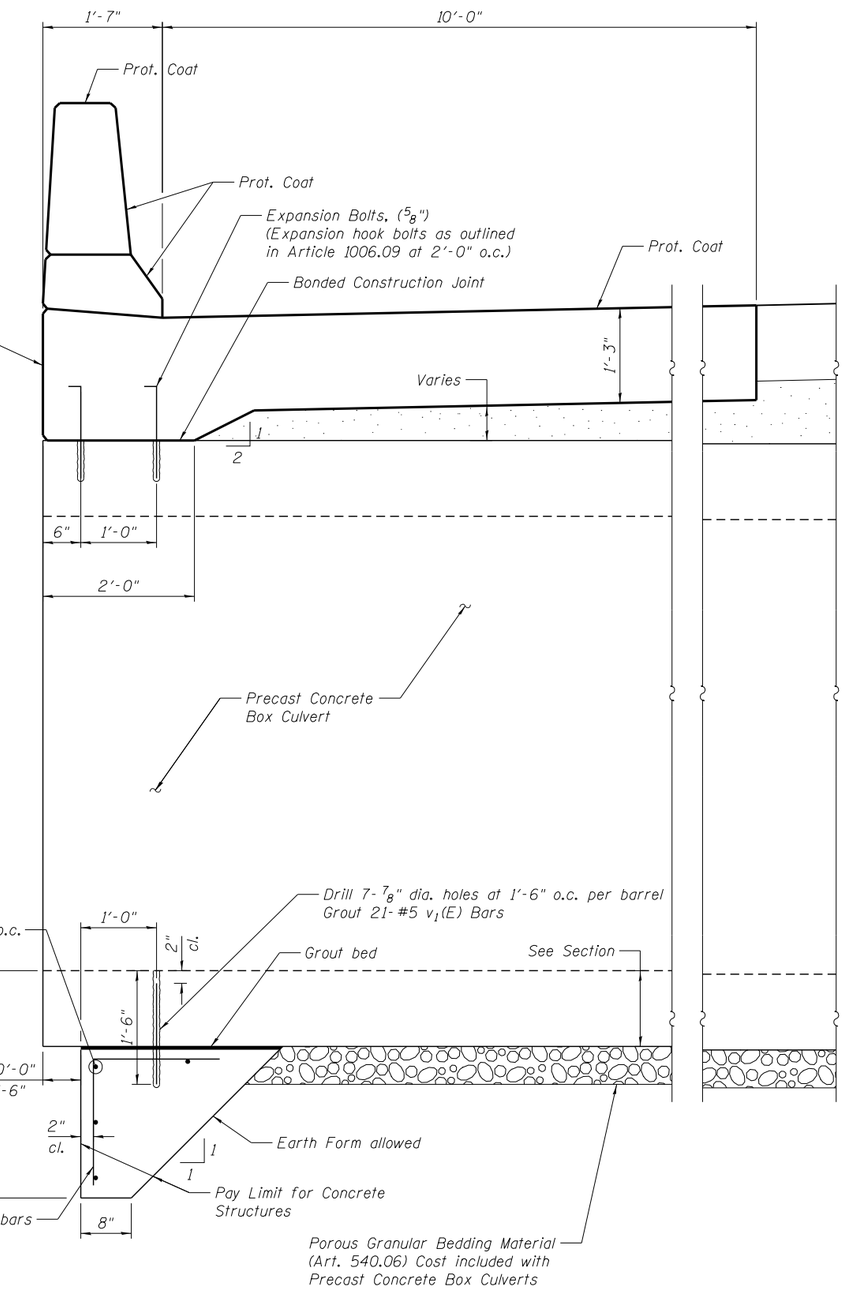

SECTION D-D

COMPANY NAME:
PROJECT CONTACT:
CLIENT:
DATE PLOTTED: 10/14/2014 8:26:20 PM
FILE NAME: 045212-p912013-wall details-001.dgn
PLOT DRIVER: pdf.pltr
PEN TABLE: standard-trans.tbl

HRGreen.com
Illinois Professional Design Firm
184-001322

USER NAME = dstancz	DESIGNED - SEC	REVISED -	
	CHECKED - RGB	REVISED -	
PLOT SCALE =	DRAWN - WJH	REVISED -	
PLOT DATE = 10/14/2014	CHECKED - RGB	REVISED -	

STATE OF ILLINOIS
DEPARTMENT OF TRANSPORTATION

ANCHOR SLAB DETAILS
STRUCTURE NO. 045-2121

SHEET NO. SW-4 OF SW-6 SHEETS

F.A.P. RTE.	SECTION	COUNTY	TOTAL SHEETS	SHEET NO.
	30-N(13)	KANE	219	131
		CONTRACT NO. 60X70		
	ILLINOIS	FED. AID PROJECT		

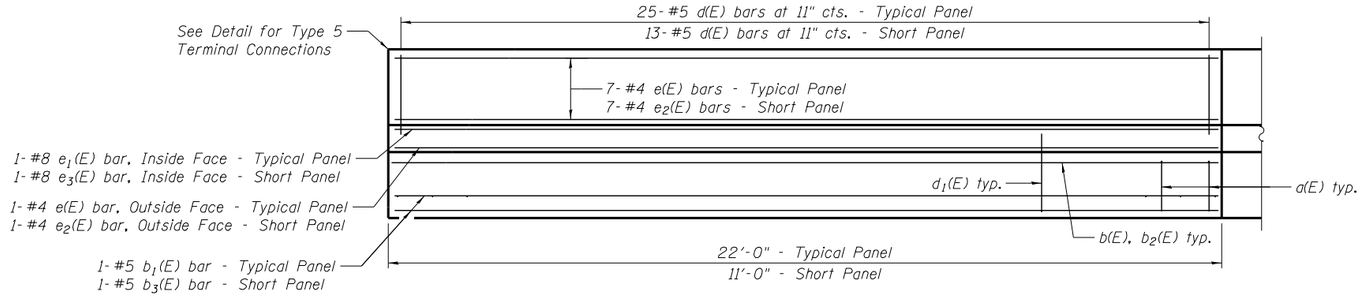

ANCHOR SLAB ELEVATION

Looking at Outside Face

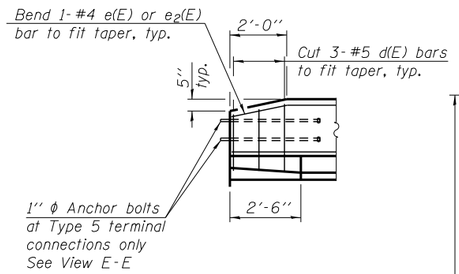

TYPE 5 TERMINAL ELEVATION

Looking at Inside Face of Parapet

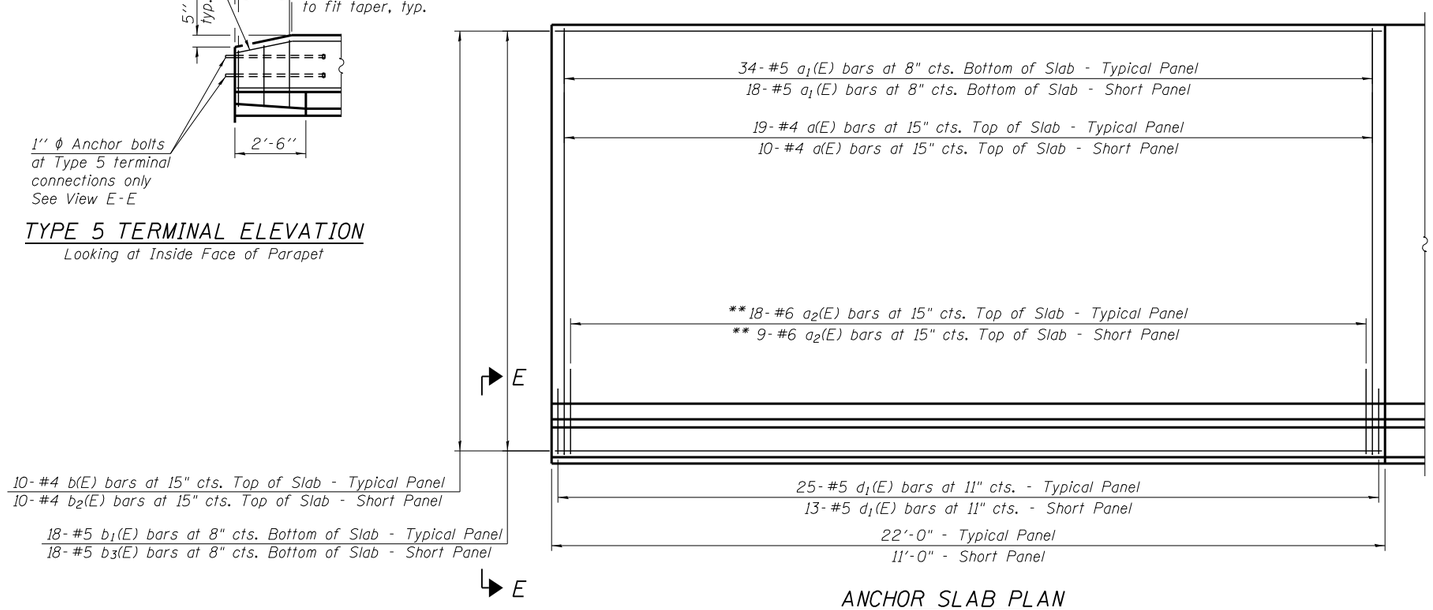

ANCHOR SLAB PLAN

** Space between a(E) bars

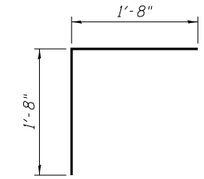

BAR v(E)

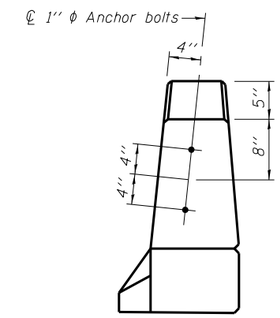

VIEW E-E

Type 5 terminal connections only.

BILL OF MATERIAL

Bar	No.	Size	Length	Shape
a (E)	277	#4	12'- 6"	
a1 (E)	496	#5	11'- 3"	
a2 (E)	261	#6	6'- 6"	
b (E)	130	#4	21'- 8"	
b1 (E)	247	#5	21'- 8"	
b2 (E)	30	#4	10'- 8"	
b3 (E)	57	#5	10'- 8"	
d (E)	364	#5	5'- 7"	
d1(E)	364	#5	7'- 11"	
e (E)	104	#4	21'- 8"	
e1 (E)	13	#8	21'- 8"	
e2 (E)	24	#4	10'- 8"	
e3 (E)	3	#8	10'- 8"	
h (E)	24	#4	16'- 0"	
v (E)	88	#4	3'- 4"	
v1 (E)	42	#5	1'- 4"	
Reinforcement Bars, Epoxy Coated			Pound	27,140
Structure Excavation			Cu Yd	99.3
Concrete Structures			Cu Yd	10.7
Concrete Superstructure			Cu Yd	218.2
Protective Coat			Sq Yd	505
Expansion Bolts 5/8 Inch			Each	88
Granular Backfill for Structures			Cu Yd	99.3
Pipe Underdrains for Structures 4"			Foot	233

Bars indicated thus 1 x 2- #8 etc. indicates 1 line of bars with 2 lengths per line.

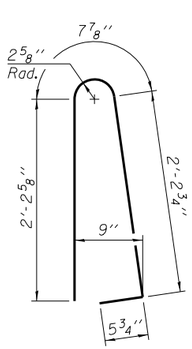

BAR d(E)

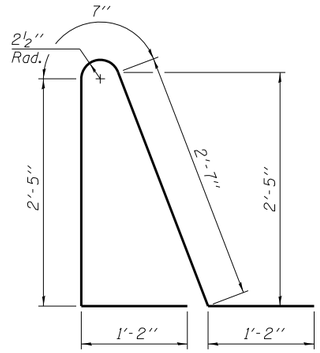

BAR d1(E)

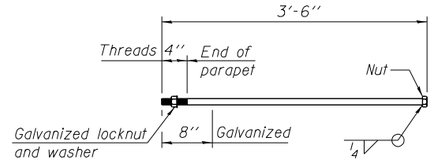

1"ϕ ANCHOR BOLT

(Cost included with Concrete Superstructure)

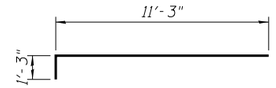

BAR a (E)

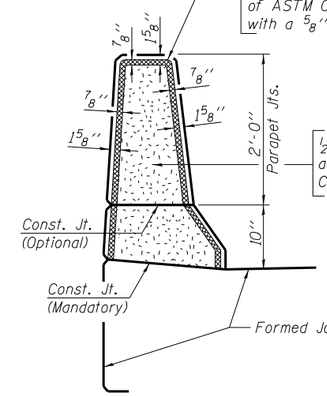

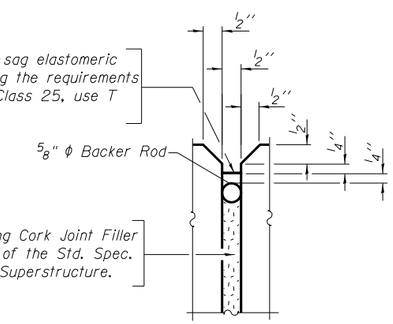

PARAPET JOINT DETAILS

COMPANY NAME:
PROJECT CONTACT:
CLIENT:
DATE PLOTTED: 10/14/2014 8:26:26 PM
FILE NAME: 045212I-p912013-wall details-002.dgn
PLOT DRIVER: pdf.pltr
PEN TABLE: standard-trans.tbl

HRGreen
HRGreen.com
Illinois Professional Design Firm # 184-001322

USER NAME = dstancz	DESIGNED - SEC	REVISED -	
	CHECKED - RGB	REVISED -	
PLOT SCALE =	DRAWN - WJH	REVISED -	
PLOT DATE = 10/14/2014	CHECKED - RGB	REVISED -	

STATE OF ILLINOIS
DEPARTMENT OF TRANSPORTATION

PARAPET DETAILS
STRUCTURE NO. 045-2121

SHEET NO. SW-5 OF SW-6 SHEETS

F.A.P. RTE.	SECTION	COUNTY	TOTAL SHEETS	SHEET NO.
	30-N(13)	KANE	219	132
		CONTRACT NO. 60X70		
		ILLINOIS FED. AID PROJECT		

Wang Engineering
wangeng@wangeng.com
1145 N Main Street
Lombard, IL 60148
Telephone: 630 953-9928
Fax: 630 953-9938

BORING LOG BC-01

WEI Job No.: 811-03-01

Client: **HR Green, Inc.**
Project: **US 30 from East Dugan to West of IL 47**
Location: **Sugar Grove, Kane County, IL**

Datum: NAVD 88
Elevation: 685.47 ft
North: 1856642.21 ft
East: 944533.70 ft
Station: 127+95.6
Offset: 16.4 RT

Depth (ft)	Elevation (ft)	SOIL AND ROCK DESCRIPTION	Sample Type / recovery	Sample No.	SPT Values (blw/6 in)	Qu (tsf)	Moisture Content (%)
	685.0	6-inch thick GRAVELLY SAND --SHOULDER--					
		Stiff, brown SILTY CLAY LOAM, trace gravel --FILL--		1	2 2 2	1.00 P	21
5				2	5 3 2	1.00 P	27
	680.0	Very soft, brown ORGANIC CLAY					
	678.5	--Organic Content = 15.2%--		3	0 0 0	0.16 B	80
		Dense to very dense, brown, GRAVELLY SANDY LOAM					
10		--%Gravel = 40.8, %Sand=47.1, %Silt and Clay=12.1--		4	6 7 7	NA	
				5	6 7 10	NP	15
15				6	6 9 13	NP	14
				7	7 14 18	NP	17
20				8	8 14 9	NP	12
				9	3 7 10	NP	18
25				10	18 40 30	NP	14

Depth (ft)	Elevation (ft)	SOIL AND ROCK DESCRIPTION	Sample Type / recovery	Sample No.	SPT Values (blw/6 in)	Qu (tsf)	Moisture Content (%)
	659.2	Very stiff to hard, gray SILTY LOAM to SILTY CLAY LOAM, trace gravel		11	5 8 12	3.69 S	11
30				12	2 4 8	2.46 B	12
35		--HARD DRILLING-- --Possible Cobbles--		13	1 6 9	4.00 P	12
	649.2	Very dense, GRAVELLY SAND --AUGER REFUSAL--					
	647.6	Dolostone fragments (Possible Weathered Bedrock)		14	1 50/4	NP	
		Boring terminated at 37.83 ft					
40							
45							
50							

GENERAL NOTES

Begin Drilling: **04-24-2014** Complete Drilling: **04-25-2014**
Drilling Contractor: **GSG** Drill Rig: **6620DT Geoprobe**
Driller: **M&V** Logger: **M. de los Reyes** Checked by: **C. Marin**
Drilling Method: **3.25" HSA, 2.5' interval to 30', 5' interval thereafter**

WATER LEVEL DATA

While Drilling: **7.00 ft**
At Completion of Drilling: **7.00 ft**
Time After Drilling: **NA**
Depth to Water: **NA**

The stratification lines represent the approximate boundary between soil types; the actual transition may be gradual.

WANGENGINC 811030 1.GPJ WANGENG.GDT 5/13/14

Wang Engineering
wangeng@wangeng.com
1145 N Main Street
Lombard, IL 60148
Telephone: 630 953-9928
Fax: 630 953-9938

BORING LOG BC-02

WEI Job No.: 811-03-01

Client: **HR Green, Inc.**
Project: **US 30 from East Dugan to West of IL 47**
Location: **Sugar Grove, Kane County, IL**

Datum: NAVD 88
Elevation: 685.43 ft
North: 1856677.95 ft
East: 944560.29 ft
Station: 128+25.3
Offset: 16.8 LT

Depth (ft)	Elevation (ft)	SOIL AND ROCK DESCRIPTION	Sample Type / recovery	Sample No.	SPT Values (blw/6 in)	Qu (tsf)	Moisture Content (%)
	684.9	6-inch thick, brown, GRAVELLY SAND --SHOULDER--					
		Stiff, brown SILTY CLAY LOAM, trace gravel --FILL--		1	1 1 2	1.00 P	20
	682.4	Loose, brown GRAVELLY SANDY LOAM --FILL--					
5				2	2 4 5	NP	14
	679.9	Medium stiff, black SILTY CLAY LOAM					
				3	1 3 4	0.50 P	40
	677.4	Dense, brown GRAVELLY SAND					
	676.2	Very stiff, gray CLAY LOAM, trace sand seams		4	4 13 17	2.00 P	9
10	674.9	Medium dense, brown, GRAVELLY SANDY LOAM to SAND --Wet--					
				5	8 11 12	NP	12
15				6	3 4 7	NP	11
				7	5 5 8	NP	13
20				8	8 8 11	NP	18
				9	3 4 7	NP	17
25				10	7 8 7	NP	16

Depth (ft)	Elevation (ft)	SOIL AND ROCK DESCRIPTION	Sample Type / recovery	Sample No.	SPT Values (blw/6 in)	Qu (tsf)	Moisture Content (%)
	659.9	Medium dense, brown GRAVELLY SAND					
				11	5 4 8	NP	15
30				12	5 14 15	NP	17
35				13	6 8 12	NP	10
	647.6	--AUGER REFUSAL-- Dolostone fragments (Possible Weathered Bedrock)		14	50/2"	NP	
		Boring terminated at 37.68 ft					
40							
45							
50							

GENERAL NOTES

Begin Drilling: **04-24-2014** Complete Drilling: **04-24-2014**
Drilling Contractor: **GSG** Drill Rig: **6620DT Geoprobe**
Driller: **M&V** Logger: **M. de los Reyes** Checked by: **C. Marin**
Drilling Method: **3.25" HSA, 2.5' interval to 30', 5' interval thereafter**

WATER LEVEL DATA

While Drilling: **8.00 ft**
At Completion of Drilling: **7.00 ft**
Time After Drilling: **NA**
Depth to Water: **NA**

The stratification lines represent the approximate boundary between soil types; the actual transition may be gradual.

WANGENGINC 811030 1.GPJ WANGENG.GDT 5/13/14

COMPANY NAME:
PROJECT CONTACT:
CLIENT:
DATE PLOTTED: 10/14/2014 8:26:28 PM
FILE NAME: 045212I-p912013-boring-001.dgn
PLOT DRIVER: pdf.pltt
PEN TABLE: standard-trans.tbl

HRGreen
HRGreen.com
Illinois Professional Design Firm # 184-001322

USER NAME = dstancz	DESIGNED - SEC	REVISED -
	CHECKED - RGB	REVISED -
PLOT SCALE =	DRAWN - WJH	REVISED -
PLOT DATE = 10/14/2014	CHECKED - RGB	REVISED -

STATE OF ILLINOIS
DEPARTMENT OF TRANSPORTATION

SOIL BORING LOGS
STRUCTURE NO. 045-2121
SHEET NO. SW-6 OF SW-6 SHEETS

F.A.P. RTE.	SECTION	COUNTY	TOTAL SHEETS	SHEET NO.
	30-N(13)	KANE	219	133
		CONTRACT NO. 60X70		
	ILLINOIS	FED. AID PROJECT		

Bench Mark: #4 - Chiseled square in 4' headwall on the North side of U.S. Route 30 approximately ±500' West of Aurora Municipal Airport entrance. Elevation 692.79.

Existing Structure: Three 18" corrugated metal pipes approximately 61'-0" long. Staged construction will be utilized to maintain one lane of traffic in each direction at all times.

No salvage.

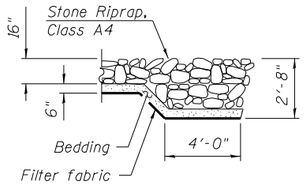

SECTION A-A

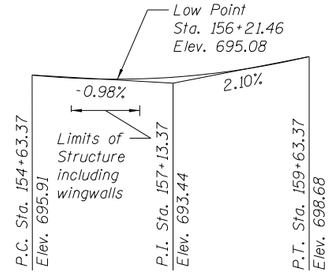

PROFILE GRADE

(along ℄ roadway)

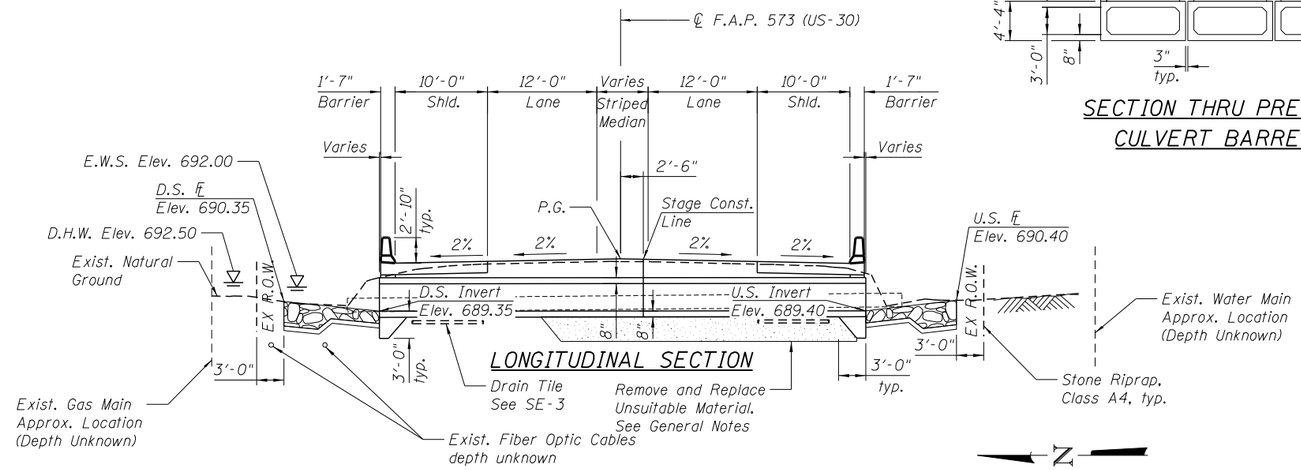

LONGITUDINAL SECTION

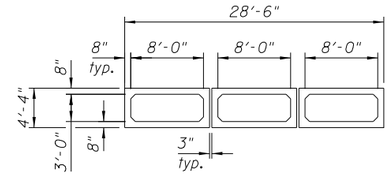

SECTION THRU PRECAST CULVERT BARRELS

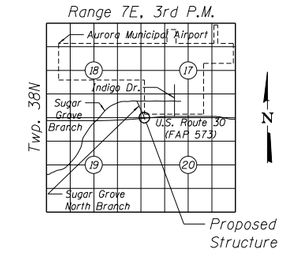

LOCATION SKETCH

LOADING HL-93

Allow 50#/sq. ft. for Future Wearing Surface.

DESIGN SPECIFICATIONS

2013 Interim Revisions to AASHTO LRFD Bridge Design Specifications. Customary U.S. Units. 6th Edition

DESIGN STRESSES

FIELD UNITS

f'c = 3,500 psi
fy = 60,000 psi (Reinforcement)

PRECAST UNITS

f'c = 5,000 psi
fy = 65,000 psi (Welded Wire Fabric)

LEGEND

✦ - Soil boring location

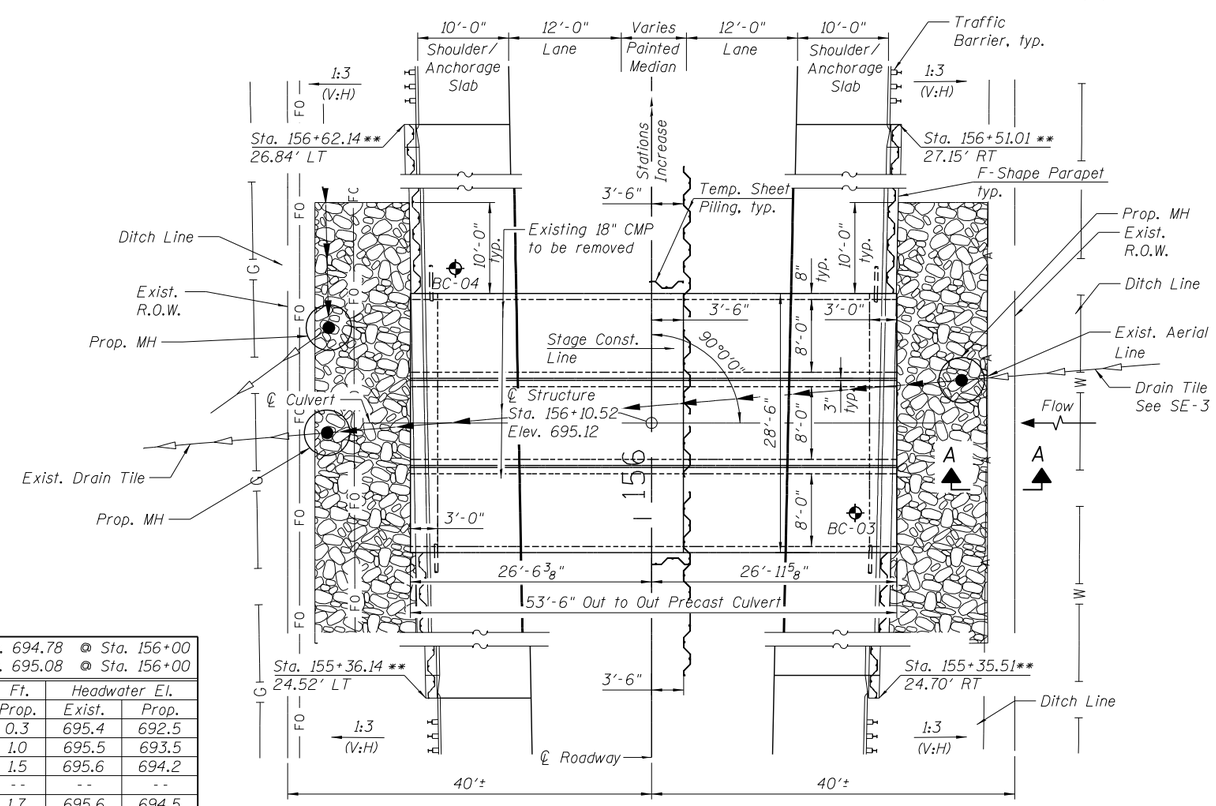

PLAN

** Station and Offset Located at Outside Face of Permanent Steel Sheet Piling

DESIGN SCOUR ELEVATION TABLE

Design Scour Elevation (ft.)	D.S.	U.S.
	686.35	686.40

WATERWAY INFORMATION

Drainage Area = 0.8 Sq. Mi.
Existing Low Grade Elev. 694.78 @ Sta. 156+00
Proposed Low Grade Elev. 695.08 @ Sta. 156+00

Flood	Freq. Yr.	Q C.F.S.	Opening Sq. Ft. Exist.	Opening Sq. Ft. Prop.	Nat. H.W.E.	Head - Ft. Exist.	Head - Ft. Prop.	Headwater El. Exist.	Headwater El. Prop.
Ten-Year	10	200	5	44	692.2	3.2	0.3	695.4	692.5
Design	50	285	5	48	692.5	3.0	1.0	695.5	693.5
Base	100	325	5	48	692.7	2.9	1.5	695.6	694.2
Overtopping	--	--	--	--	--	--	--	--	--
Max. Calc.	500	349	5	48	692.8	2.8	1.7	695.6	694.5
Two-Year	2	131	5	38	692.0	3.2	0.1	695.2	692.1

10-Year Velocity through Existing Culvert = 9.3 FPS
10-Year Velocity through Proposed Culvert = 5.5 FPS

To the best of my knowledge, information and belief, this culvert design is structurally adequate for the design loading shown on the plans. The design is an economical one for the style of structure and complies with the requirements of the current "AASHTO Standard Specifications for Highway Bridges".

08-15-2014
Structural Engineer — Expires: 11/30/2014
HRGreen

STATE OF ILLINOIS — ROBERT G. DAVIES — 081-004666 — McHENRY, IL — LICENSED STRUCTURAL ENGINEER

GENERAL PLAN
ROUTE US-30 OVER
SUGAR GROVE NORTH BRANCH
F.A.P. ROUTE 573 - SEC. 30-N (13)
KANE COUNTY
STATION 156+10.52
STRUCTURE NO. 045-2122

COMPANY NAME:
PROJECT CONTACT:
CLIENT:
DATE PLOTTED: 10/14/2014 8:26:57 PM
FILE NAME: 0452122-P912013-GPE-001.dgn
PLOT DRIVER: pdf.pltr
PEN TABLE: standard-trans.tbl

HRGreen — HRGreen.com — Illinois Professional Design Firm # 184-001322

USER NAME = dstancz	DESIGNED - SEC	REVISED -
	CHECKED - RGB	REVISED -
PLOT SCALE =	DRAWN - WJH	REVISED -
PLOT DATE = 10/14/2014	CHECKED - RGB	REVISED -

STATE OF ILLINOIS
DEPARTMENT OF TRANSPORTATION

SHEET NO. SE-1 OF SE-7 SHEETS

F.A.P. RTE.	SECTION	COUNTY	TOTAL SHEETS	SHEET NO.
	30-N(13)	KANE	219	134

CONTRACT NO. 60X70
ILLINOIS FED. AID PROJECT

GENERAL NOTES

1. Precast concrete culverts, 8'x3' shall conform to the requirements of Article 540.06 of the Standard Specifications, and the applicable requirements of AASHTO M 273 and ASTM C1577-14.

   The minimum precast concrete strength shall be 5,000 psi.

   Lifting holes shall be filled with concrete plugs and mastic after box sections are in place.

   Fill varies from 1'-0" to 2'-0" within limits of roadway.

2. Contractor shall maintain ditch flows in accordance with the Standard Specifications Article 502.

3. Reinforcement bars designated (E) shall be epoxy coated

4. See Airport General Notes for limiting equipment height.

5. Removal of Existing Structures No. 2 includes the removal of three existing 18" CMP culverts (total length of approximately 183') as well as the placement and removal of any temporary extentions of the existing CMP necessary to maintain flow under temporary pavement during Staged Construction.

6. If the Contractor chooses to alter the temporary cantilevered sheet piling design requirements shown on the plans, a design submittal including plan details and calculations will be required for review and acceptance by the Engineer.

7. The Contractor shall submit a temporary soil retention system design including plan details andcalculations for review and acceptance by the Engineer where Temporary Soil Retention System is indicated.

8. The limits and quantities of removal and replacement shown are based on boring data and may be modified by the District Geotechnical and Field Engineers for variable subsurface conditions encountered in the field. Anticipated limits extend from bottom of porous granular bedding material (688.2±) to 684.2 between 10' Lt. and 27' Rt. from Sta. 155+94.88 to Sta. 156+26.76.

   Material excavated below the bottom porous granular bedding material will be paid for as Removal and Disposal of Unsuitable Materials for Structures (CY). Replace excavated material with Rock Fill (Ton).

   The Rock Fill shall be capped with 6" of CA 7 to satisfy the Standard Specifications. The cost of Capping Material shall be included in the Pay Item for Rock Fill.

9. Excavation and backfill required for the placement of the Precast Concrete Box Culvert shall be in accordance with Article 540.06 and the details in the plans. Cost included in Precast Box Culverts 8'x3'.

TOTAL BILL OF MATERIAL

ITEM	UNIT	TOTAL
STONE RIPRAP, CLASS A4	SQ YD	114
FILTER FABRIC	SQ YD	114
REMOVAL OF EXISTING STRUCTURES NO. 2	EACH	1
STRUCTURE EXCAVATION	CU YD	33.6
REMOVAL AND DISPOSAL OF UNSUITABLE MATERIAL FOR STRUCTURES	CU YD	175
CONCRETE STRUCTURES	CU YD	9.0
CONCRETE SUPERSTRUCTURE	CU YD	165.2
PROTECTIVE COAT	SQ YD	383
REINFORCEMENT BARS, EPOXY COATED	POUND	20,510
EXPANSION BOLTS 5/8 INCH	EACH	60
PRECAST CONCRETE BOX CULVERTS 8' X 3'	FOOT	161
PERMANENT STEEL SHEET PILING	SQ FT	1819
GRANULAR BACKFILL FOR STRUCTURES	CU YD	33.6
DRAINAGE SCUPPERS, DS-11	EACH	4
TEMPORARY SHEET PILING	SQ FT	996
PIPE UNDERDRAINS FOR STRUCTURES 4"	FOOT	185
ROCK FILL	TON	307
TEMPORARY SOIL RETENTION SYSTEM	SQ FT	78

10. Anchorage slab and parapet shall be paid for under Concrete Superstructures and Reinforcement Bars, Epoxy Coated. Reinforcement bars shall be placed in accordance with Section 508. Class SI Concrete shall be used for Slab and Parapet. Slab and Parapet shall be formed, placed and consolidated in accordance with Section 503. Traffic surface shall be struck off, finished and cured according to Section 408 including Type B finish as noted in Article 420.09 (e)(2).

11. Slip-forming of the parapets is not allowed.

CONSTRUCTION SEQUENCE

STAGE I

1. Construct Temporary Embankment, extend existing culverts
2. Construct Temporary Pavement
3. Drive Temporary Sheet Pile and Temporary Soil Retention
4. Drive Permanent Sheet Pile, North Side
5. Excavate for Culverts
6. Over excavate unsuitable materials and place Rock Fill if required
7. Construct Toe Wall
8. Place grout on top of Toe Wall as Precast Box Culvert End Section is set on bedding.
9. Drill and Grout dowels. Drill Expansion Bolts.
10. Construct Anchorage Slab and Parapet
11. Set Stage II Temporary Sheet Pile

STAGE II

1. Place Traffic Barrier move traffic, remove traffic barriers from Stage II Construction Area
2. Remove section of Temporary Sheet Pile
3. Excavate and place culvert (steps 5-9 above)
4. Construct Anchorage Slab and pavement
5. Remove remaining Temporary Sheet Pile and Soil Retention

INDEX OF SHEETS

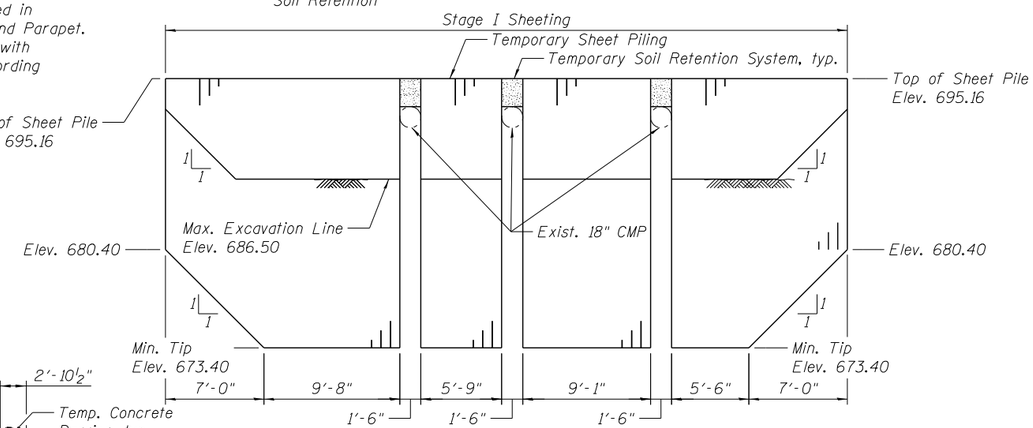

TEMPORARY SHEET PILING STAGE I DETAIL

(Looking North)
Min. Section Modulus = 11.0 in³/ft

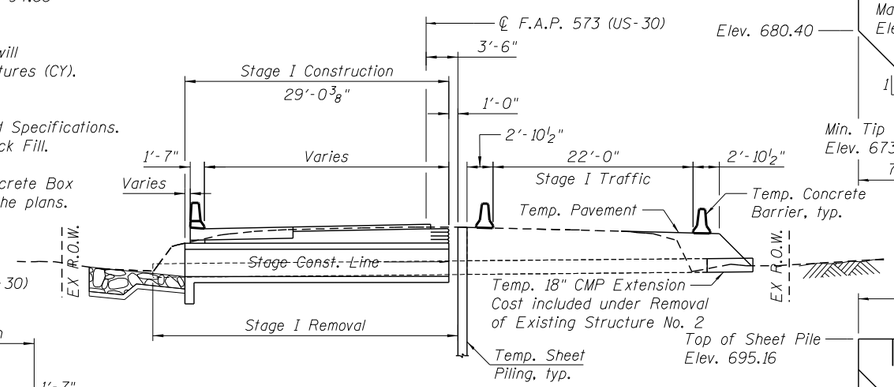

STAGE I CONSTRUCTION

(Looking East)
(Dimensions shown are at right angle to ℄ roadway)

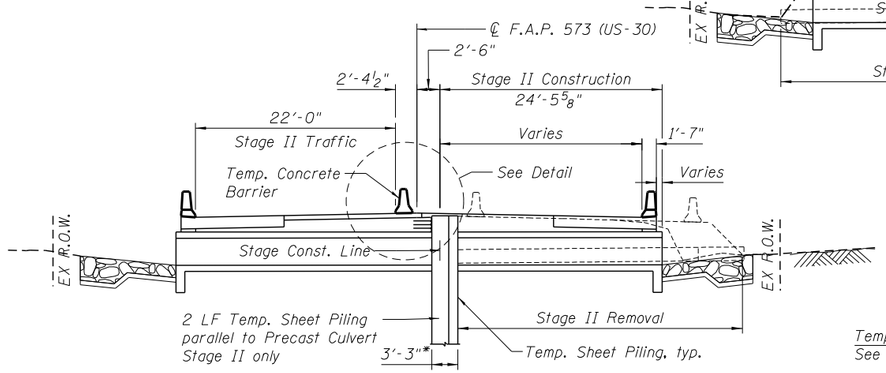

STAGE II CONSTRUCTION

(Looking East)
(Dimensions shown are at right angle to ℄ roadway)

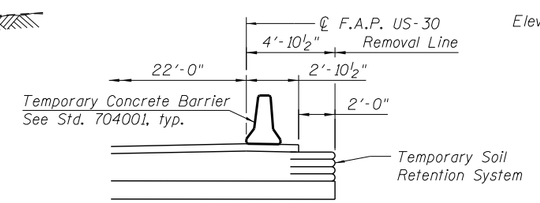

TEMPORARY SOIL RETENTION SYSTEM

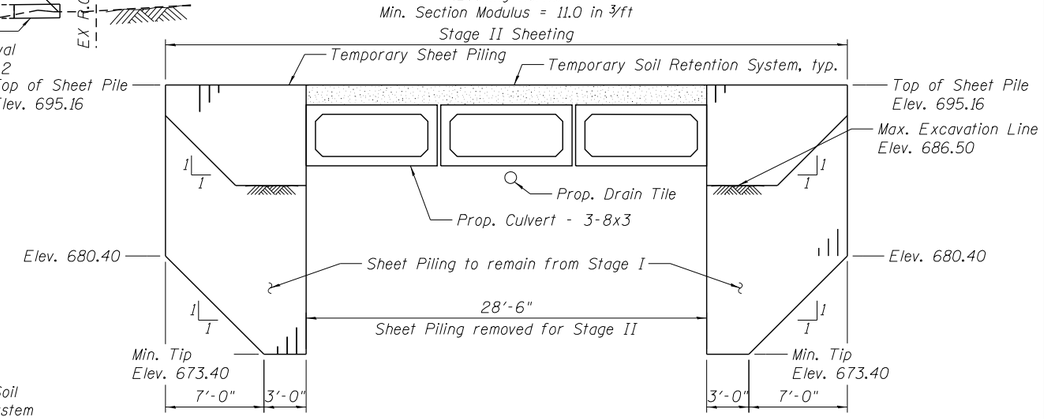

TEMPORARY SHEET PILING STAGE II DETAIL

(Looking North)
Min. Section Modulus = 10.0 in³/ft

COMPANY NAME:
PROJECT CONTACT:
CLIENT:
DATE PLOTTED: 10/14/2014 8:21:01 PM
FILE NAME: 045212-p9120113-gen-001.dgn
PLOT DRIVER: pdf.pltr
PEN TABLES: standard-trans.tbl

HRGreen.com
Illinois Professional Design Firm # 184-001322

USER NAME = dstancz	DESIGNED - SEC	REVISED -	
	CHECKED - RGB	REVISED -	
PLOT SCALE =	DRAWN - WJH	REVISED -	
PLOT DATE = 10/14/2014	CHECKED - RGB	REVISED -	

STATE OF ILLINOIS
DEPARTMENT OF TRANSPORTATION

GENERAL NOTES AND BILL OF MATERIALS
STRUCTURE NO. 045-2122

SHEET NO. SE-2 OF SE-7 SHEETS

F.A.P. RTE.	SECTION	COUNTY	TOTAL SHEETS	SHEET NO.
	30-N(13)	KANE	219	135
		CONTRACT NO. 60X70		
	ILLINOIS	FED. AID PROJECT		

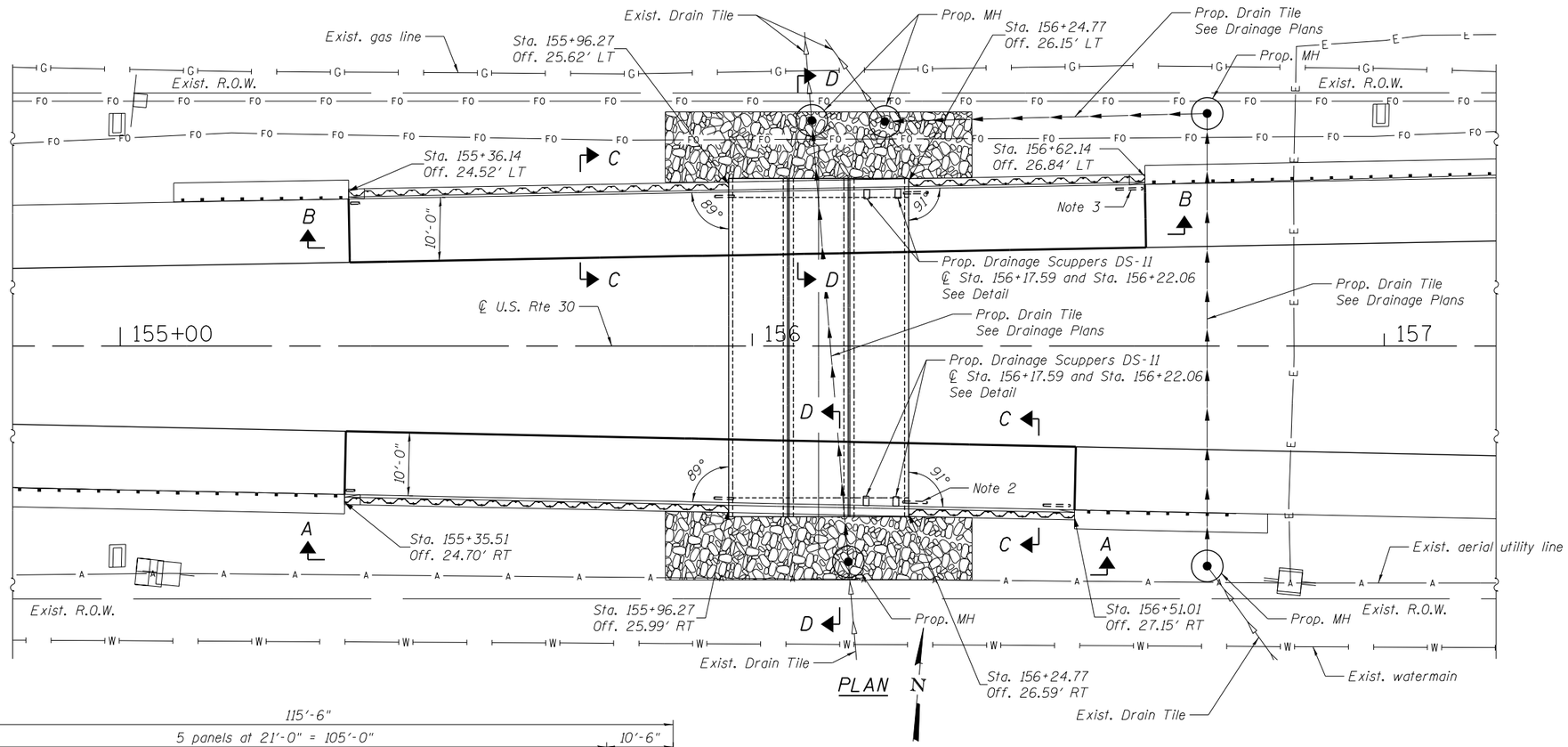

PLAN

Notes:

1. Offsets measured to the outside face of Permanent Steel Sheet Piling
2. Outlet 4" dia. Perf. Pipe Drain through formed hole in Precast Concrete Box Culvert. Outlet Elev. 690.2
3. Slope 4" dia. Perf. Pipe Drain at min. 1/4"/ft to outlet.
4. Permanent Steel Sheet Piling designed to account for the Anchorage Slab's bearing pressure surcharge of 1.0 ksf and horizontal sliding force of 0.5 kips/ft. of wall.

PERMANENT STEEL SHEET PILE DATA

Min. Section Modulus = 12.5 in^3/ft
Min. Thickness = 5/16"
Min. Yield Strength = 50 ksi

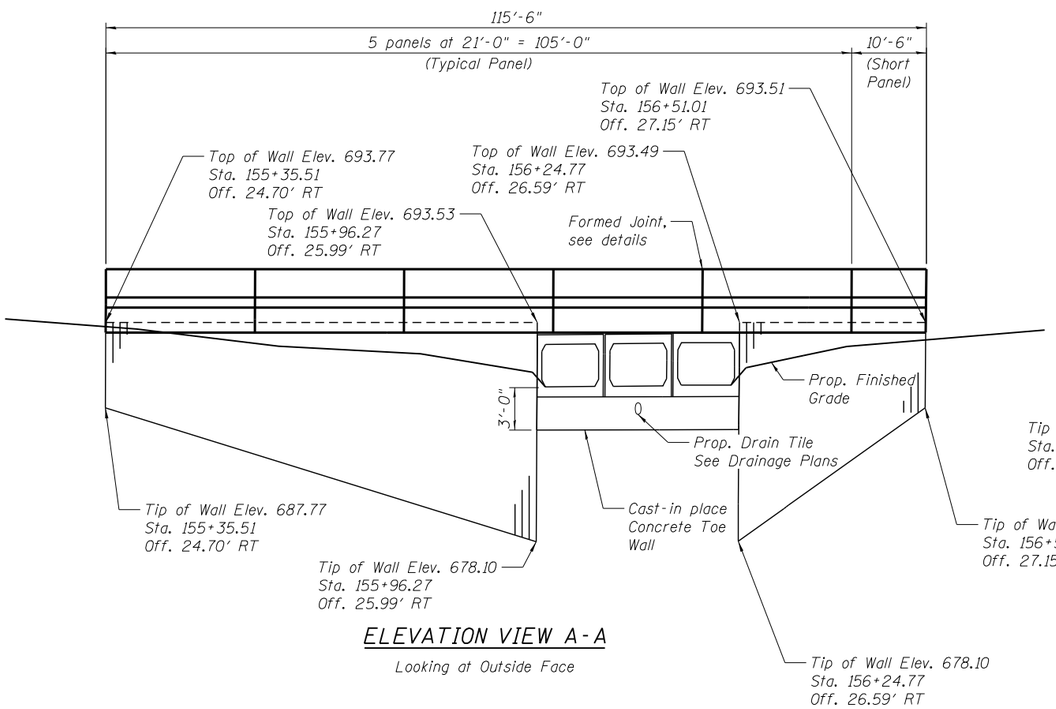

ELEVATION VIEW A-A

Looking at Outside Face

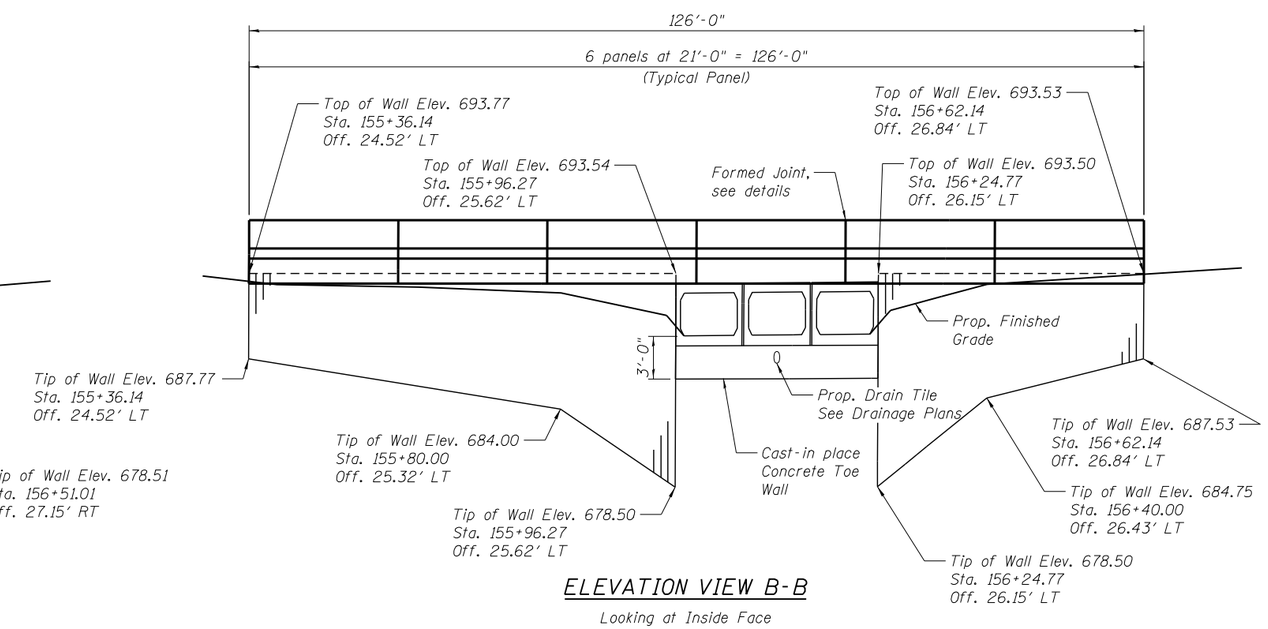

ELEVATION VIEW B-B

Looking at Inside Face

COMPANY NAME:
PROJECT CONTACT:
CLIENT:
DATE PLOTTED: 10/14/2014 8:27:08 PM
FILE NAME: 045212-p912013-wall-001.dgn
PLOT DRIVER: pdf.pltr
PEN TABLE: standard-trans.tbl

HRGreen.com Illinois Professional Design Firm # 184-001322	USER NAME = dstancz	DESIGNED - SEC	REVISED -	STATE OF ILLINOIS DEPARTMENT OF TRANSPORTATION	STEEL SHEET PILE WALL DETAILS STRUCTURE NO. 045-2122
		CHECKED - RGB	REVISED -		
	PLOT SCALE =	DRAWN - WJH	REVISED -		
	PLOT DATE = 10/14/2014	CHECKED - RGB	REVISED -		SHEET NO. SE-3 OF SE-7 SHEETS

F.A.P. RTE.	SECTION	COUNTY	TOTAL SHEETS	SHEET NO.
	30-N(13)	KANE	219	136
		CONTRACT NO. 60X70		
	ILLINOIS	FED. AID PROJECT		

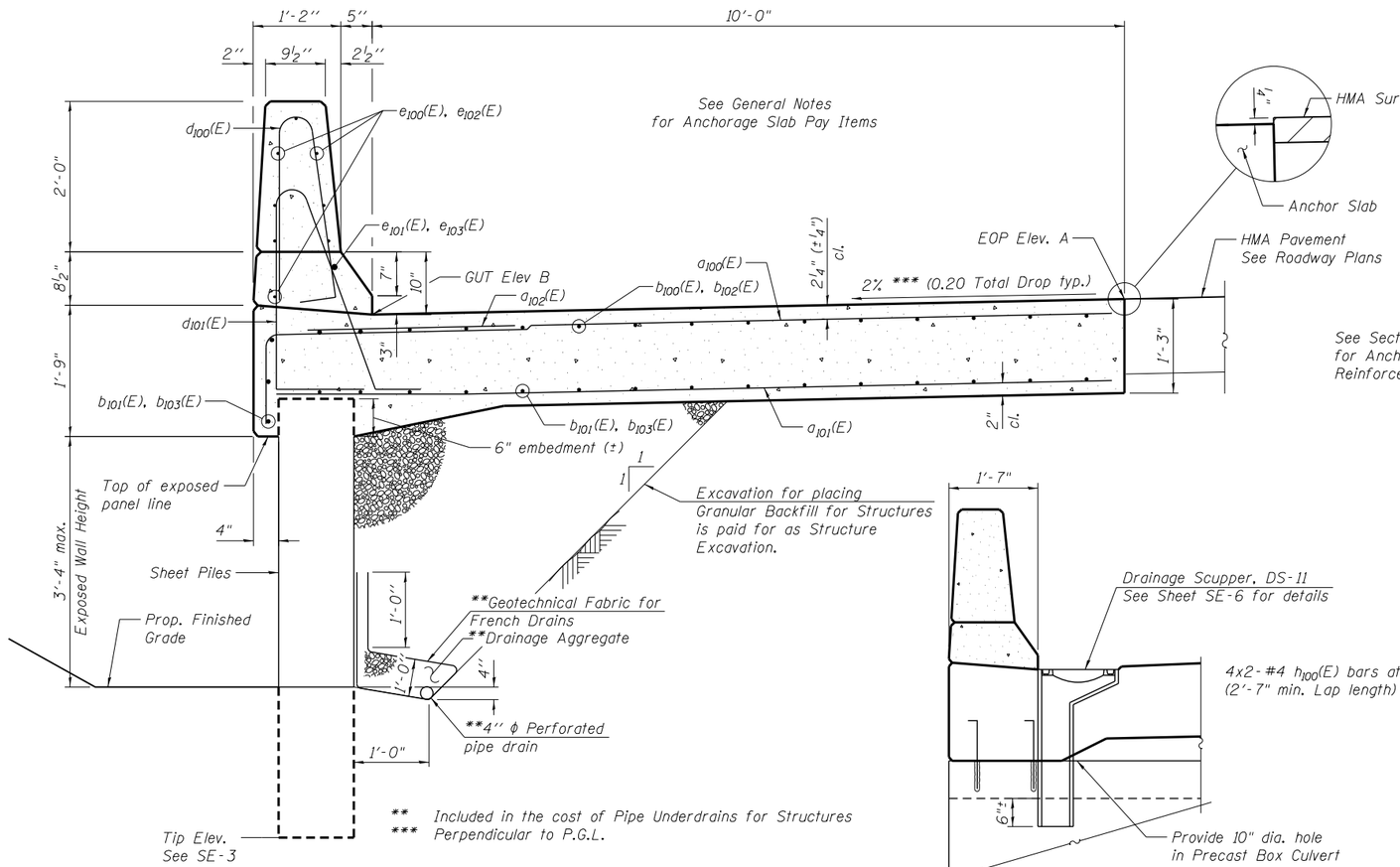

SECTION C-C

SECTION A-A

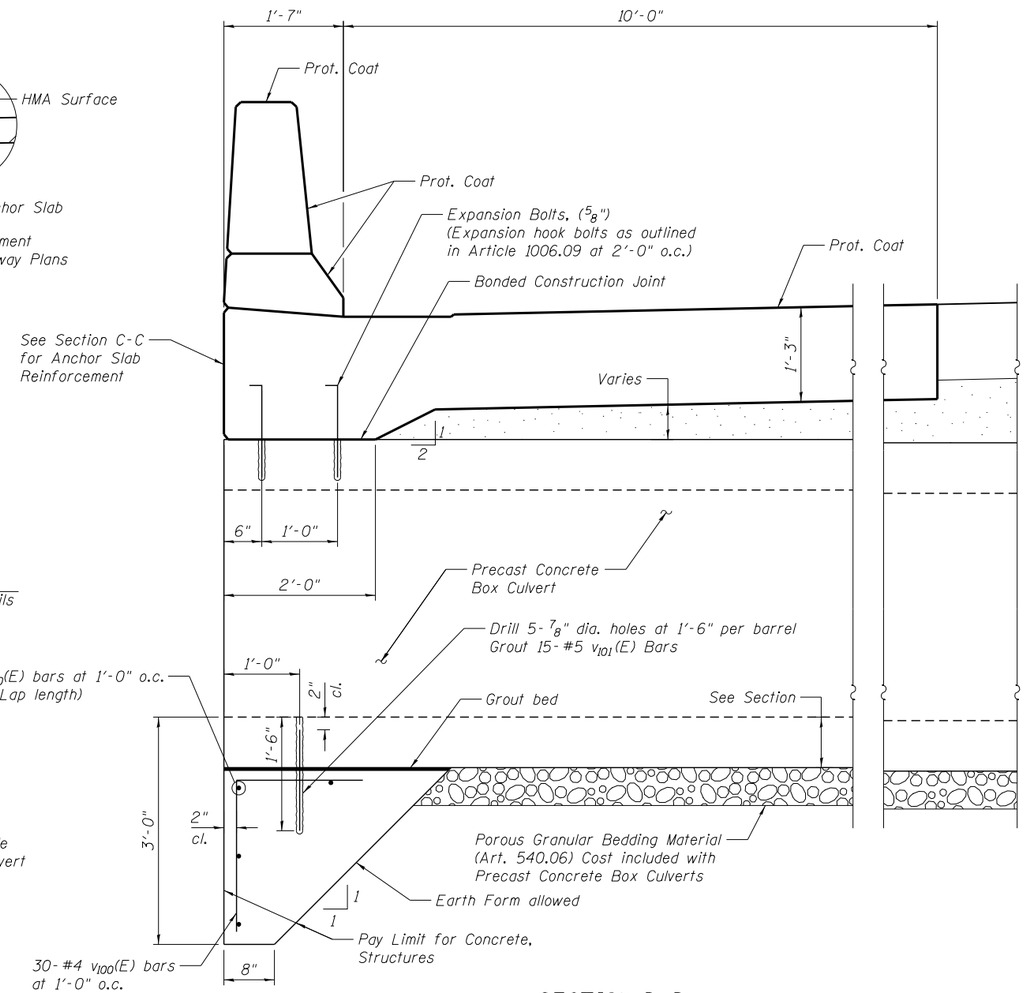

SECTION D-D

NORTH ANCHORAGE SLAB ELEVATIONS				
	STA	PGL ELEV	EOP ELEV A	GUT ELEV B
START	155+36.14	695.35	695.09	694.89
JT 1	155+57.14	695.26	694.98	694.78
JT 2	155+78.14	695.18	694.90	694.70
JT 3	155+99.14	695.14	694.85	694.65
JT 4	156+20.14	695.12	694.82	694.62
JT 5	156+41.14	695.13	694.83	694.63
END	156+62.14	695.17	694.85	694.65

SOUTH ANCHORAGE SLAB ELEVATIONS				
	STA	PGL ELEV	EOP ELEV A	GUT ELEV B
START	155+35.51	695.36	695.09	694.89
JT 1	155+56.51	695.26	694.98	694.78
JT 2	155+77.51	695.18	694.90	694.70
JT 3	155+98.51	695.14	694.84	694.64
JT 4	156+19.51	695.12	694.82	694.62
JT 5	156+40.51	695.13	694.82	694.62
END	156+51.01	695.14	694.83	694.63

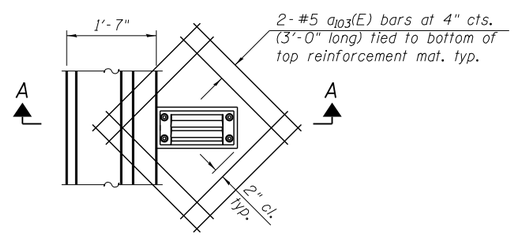

PLAN

DRAINAGE SCUPPER DS-11 REINFORCEMENT

Note:
Cut longitudinal reinforcement to
clear drainage scuppers

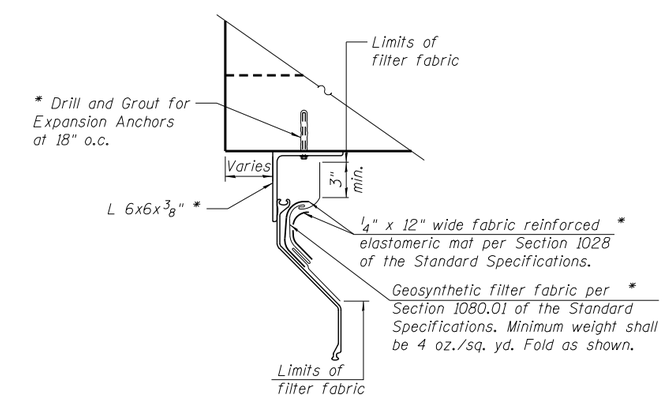

CORNER DETAIL

* Cost included under Permanent Steel Sheet Piling

COMPANY NAME:
PROJECT CONTACT:
CLIENT:
DATE PLOTTED: 10/14/2014 6:27:12 PM
FILE NAME: 0452122-p92013-wall details-001.dgn
PLOT DRIVER: pdf.pltr
PEN TABLE: standard-trans.tbl

HRGreen
HRGreen.com
Illinois Professional Design Firm
184-001322

USER NAME = dstancz	DESIGNED - SEC	REVISED -	
	CHECKED - RGB	REVISED -	
PLOT SCALE =	DRAWN - WJH	REVISED -	
PLOT DATE = 10/14/2014	CHECKED - RGB	REVISED -	

STATE OF ILLINOIS
DEPARTMENT OF TRANSPORTATION

ANCHOR SLAB DETAILS
STRUCTURE NO. 045-2122

SHEET NO. SE-4 OF SE-7 SHEETS

F.A.P. RTE.	SECTION	COUNTY	TOTAL SHEETS	SHEET NO.
	30-N(13)	KANE	219	137
		CONTRACT NO. 60X70		
	ILLINOIS	FED. AID PROJECT		

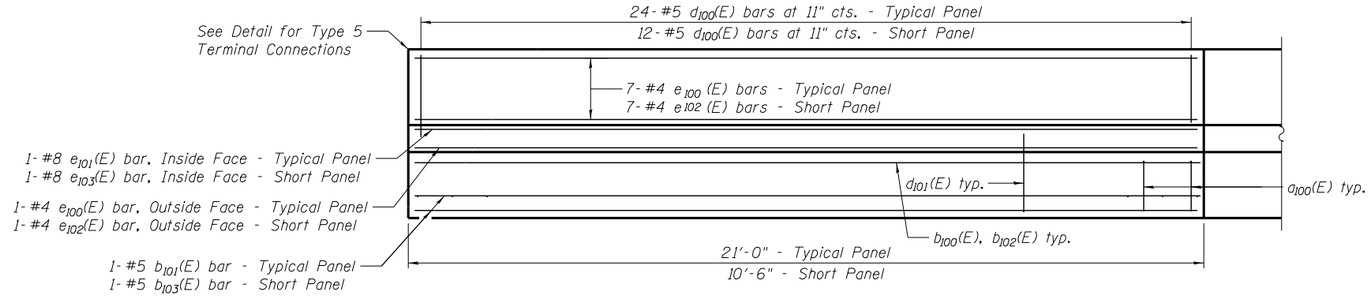

ANCHOR SLAB ELEVATION

Looking at Outside Face

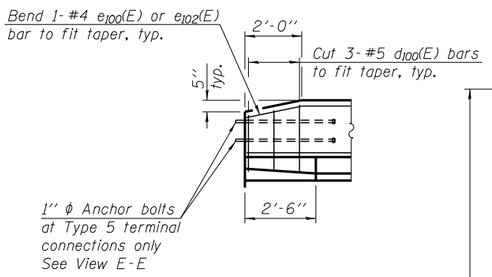

TYPE 5 TERMINAL ELEVATION

Looking at Inside Face of Parapet

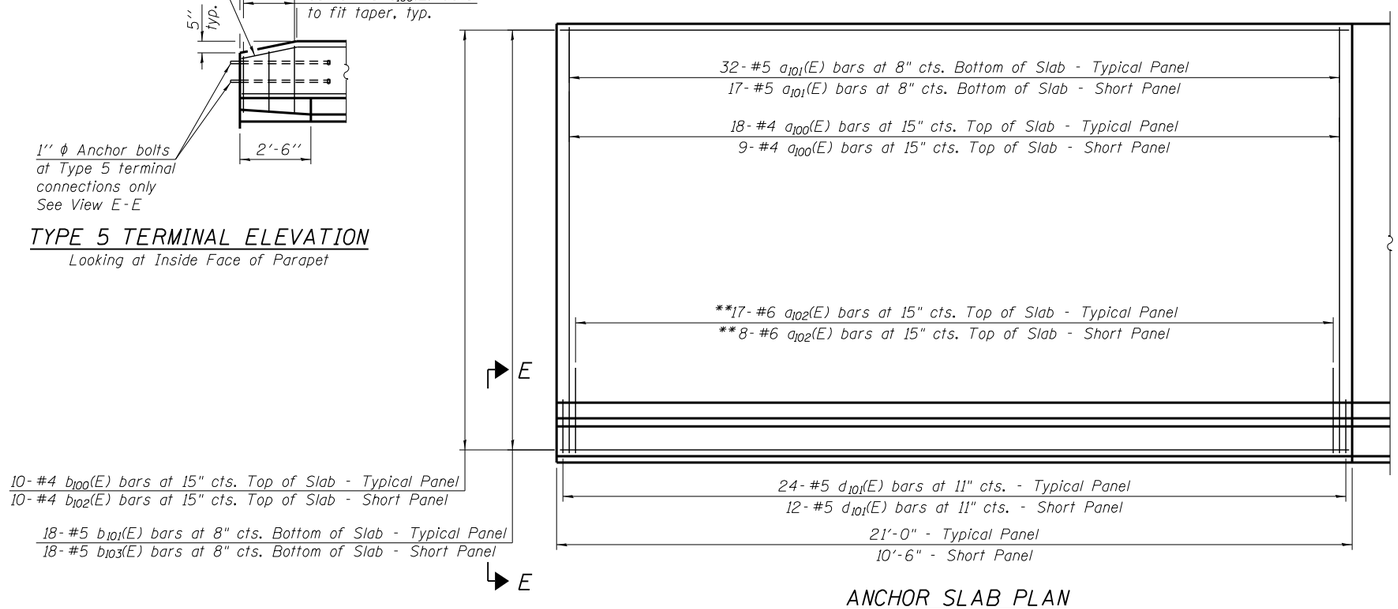

ANCHOR SLAB PLAN

** Space between a_{100}(E) bars

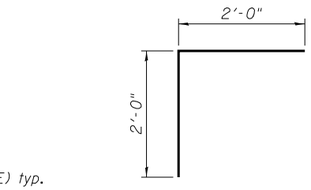

BAR v_{100}(E)

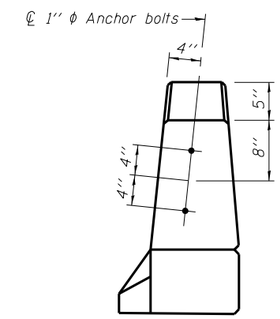

VIEW E-E

Type 5 terminal connections only.

BILL OF MATERIAL

Bar	No.	Size	Length	Shape
a_{100} (E)	207	#4	12'- 6"	
a_{101} (E)	369	#5	11'- 3"	
a_{102} (E)	195	#6	6'- 6"	
a_{103} (E)	32	#5	3'- 0"	
b_{100} (E)	110	#4	20'- 8"	
b_{101} (E)	209	#5	20'- 8"	
b_{102} (E)	10	#4	10'- 2"	
b_{103} (E)	19	#5	10'- 2"	
d_{100} (E)	276	#5	5'- 7"	
d_{101} (E)	276	#5	7'- 11"	
e_{100} (E)	88	#4	20'- 8"	
e_{101} (E)	11	#8	20'- 8"	
e_{102} (E)	8	#4	10'- 2"	
e_{103} (E)	1	#8	10'- 2"	
h_{100} (E)	16	#4	15'- 6"	
v_{100} (E)	60	#4	4'- 0"	
v_{101} (E)	30	#5	1'- 4"	
Reinforcement Bars, Epoxy Coated			Pound	20,510
Structure Excavation			Cu Yd	33.6
Concrete Structures			Cu Yd	9.0
Concrete Superstructure			Cu Yd	165.2
Protective Coat			Sq Yd	383
Expansion Bolts 5/8 Inch			Each	60
Granular Backfill for Structures			Cu Yd	33.6
Pipe Underdrains for Structures 4"			Foot	185

Bars indicated thus 1 x 2- #8 etc. indicates 1 line of bars with 2 lengths per line.

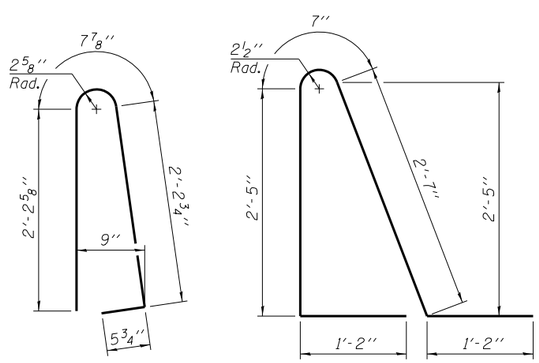

BAR d_{100}(E)

BAR d_{101}(E)

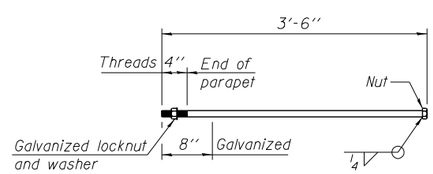

1"ϕ ANCHOR BOLT

(Cost included with Concrete Superstructure)

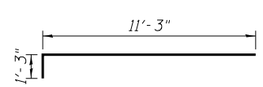

BAR a_{100}(E)

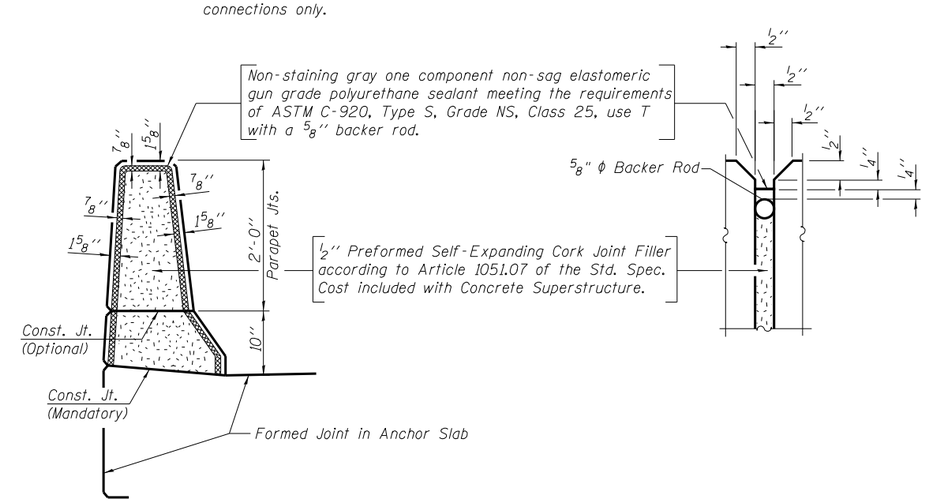

PARAPET JOINT DETAILS

COMPANY NAME:
PROJECT CONTACT:
CLIENT:
DATE PLOTTED: 10/14/2014 8:27:16 PM
FILE NAME: 0452122-p92013-wall details-002.dgn
PLOT DRIVER: pdf.pltr
PEN TABLE: standard-trans.tbl

HRGreen.com
Illinois Professional Design Firm # 184-001322

USER NAME = dstancz	DESIGNED - SEC	REVISED -	
	CHECKED - RGB	REVISED -	
PLOT SCALE =	DRAWN - WJH	REVISED -	
PLOT DATE = 10/14/2014	CHECKED - RGB	REVISED -	

STATE OF ILLINOIS
DEPARTMENT OF TRANSPORTATION

PARAPET DETAILS
STRUCTURE NO. 045-2122
SHEET NO. SE-5 OF SE-7 SHEETS

F.A.P. RTE.	SECTION	COUNTY	TOTAL SHEETS	SHEET NO.
	30-N(13)	KANE	219	138
		CONTRACT NO. 60X70		
	ILLINOIS	FED. AID PROJECT		

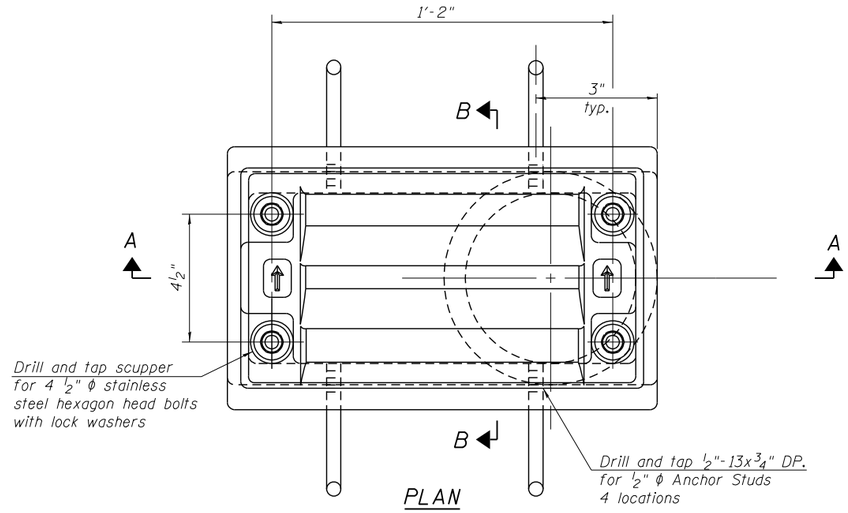

PLAN

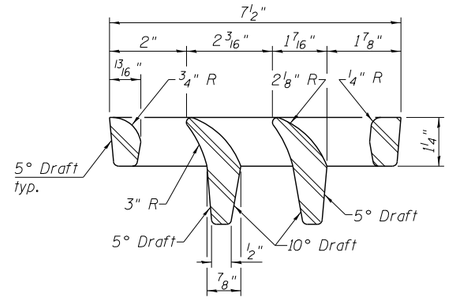

VANE GRATE DETAIL

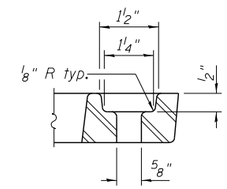

BOLT HOLE DETAIL

Notes:

All cast iron parts shall be gray iron conforming to the requirements of AASHTO M 105, Class 35B.

Bolts, anchor studs, washers and nuts shall conform to the requirements of ASTM A 307 and shall be galvanized according to AASHTO M 232.

Downspouts located on the exterior side of a painted steel fascia beam shall be painted with the finish coat specified for the exterior side of the fascia beam.

As an alternate, bolts, anchor studs, washers and nuts may be stainless steel according to Article 1006.29(d) of the Standard Specifications.

Structural steel weldments of equal sections and of the same configuration may be substituted for the cast iron scupper frame. Fillet or full penetration welds shall be used for the weldments. Details shall be submitted to the Engineer for approval. Structural steel weldments shall not be substituted for the cast iron scupper grate. Structural steel frames and downspouts shall be galvanized according to AASHTO M111.

The Contractor shall take appropriate measures to assure that Protective Coat is not applied to the scupper.

Cost of the Grate, Frame, Downspout, Anchor Studs, Bolts, Washers and Nuts including complete installation of the scupper shall be paid for at the contract unit price each for Drainage Scupper, DS-11.

Alternate fiberglass downspout conforming to ASTM D 2996 with a short-time rupture strength hoop tensile stress of 30,000 psi min. may be used in lieu of the cast iron or steel equivalent.

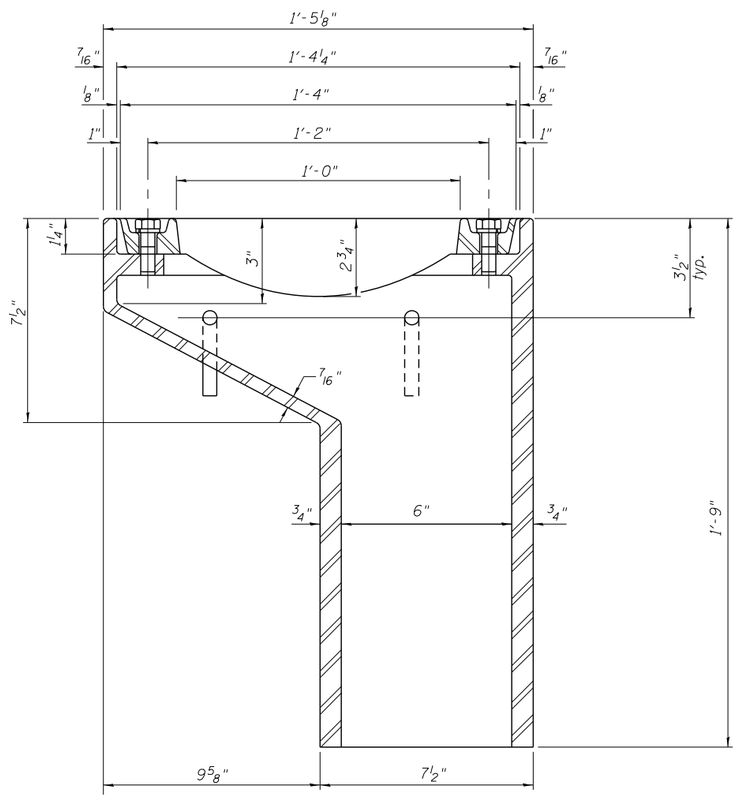

SECTION A-A

See sheet SE-4 for scupper location relative to parapet.

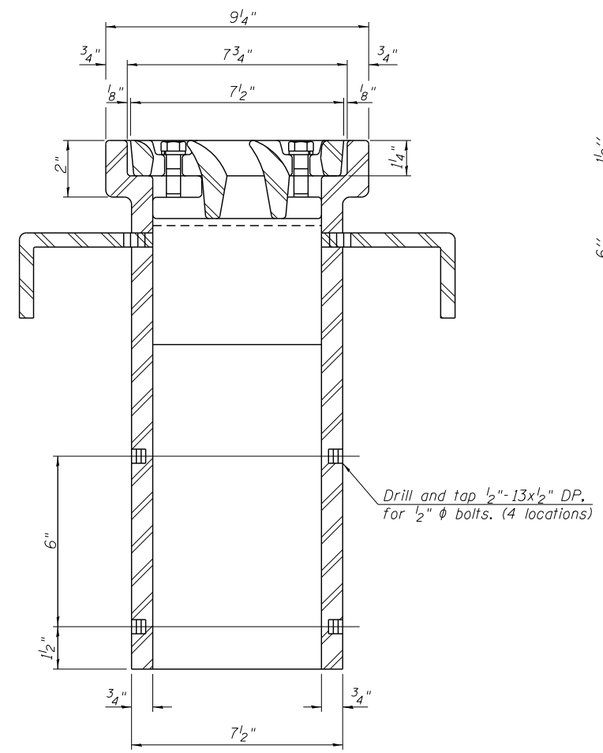

SECTION B-B

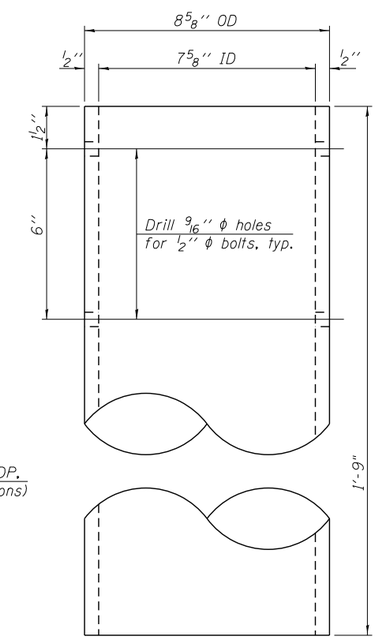

DOWNSPOUT

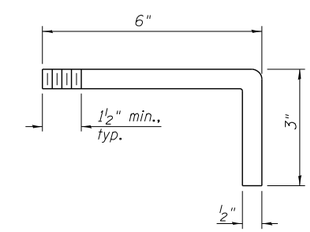

ANCHOR STUD DETAIL

BILL OF MATERIAL

ITEM	UNIT	QUANTITY
Drainage Scupper, DS-11	Each	4

DS-11

7-1-10

COMPANY NAME:
PROJECT CONTACT:
CLIENT:
DATE PLOTTED: 10/14/2014 8:27:19 PM
FILE NAME: 0452122-p9120113-Scupper-001.dgn
PLOT DRIVER: pdf.pltt
PEN TABLE: standard-trans.tbl

HRGreen.com
Illinois Professional Design Firm # 184-001322

USER NAME = dstancz	DESIGNED - SEC	REVISED -	
	CHECKED - RGB	REVISED -	
PLOT SCALE =	DRAWN - WJH	REVISED -	
PLOT DATE = 10/14/2014	CHECKED - RGB	REVISED -	

STATE OF ILLINOIS
DEPARTMENT OF TRANSPORTATION

DRAINAGE SCUPPER, DS-11
STRUCTURE NO. 045-2122

SHEET NO. SE-6 OF SE-7 SHEETS

F.A.P. RTE.	SECTION	COUNTY	TOTAL SHEETS	SHEET NO.
	30-N(13)	KANE	219	139
		CONTRACT NO. 60X70		
	ILLINOIS	FED. AID PROJECT		

Wang Engineering
wangeng@wangeng.com
1145 N Main Street
Lombard, IL 60148
Telephone: 630 953-9928
Fax: 630 953-9938

BORING LOG BC-03

WEI Job No.: 811-03-01

Client: **HR Green, Inc.**
Project: **US 30 from East Dugan to West of IL 47**
Location: **Sugar Grove, Kane County, IL**

Datum: NAVD 88
Elevation: 693.74 ft
North: 1856904.65 ft
East: 947325.98 ft
Station: 156+0.1
Offset: 22.4 RT

Elevation (ft)	SOIL AND ROCK DESCRIPTION	Depth (ft)	Sample Type / recovery	Sample No.	SPT Values (blw/6 in)	Qu (tsf)	Moisture Content (%)
693.2	6-inch, thick GRAVELLY SAND --SHOULDER--						
	Stiff, brown SILTY CLAY LOAM, trace gravel --FILL--			1	1 2 5	1.50 P	23
690.7	Soft, brown CLAY	5		2	0 1 3	0.41 B	34
				3	4 16 14	0.25 P	40
684.7	Dense, brown, coarse SAND, trace gravel --Wet--	10		4	8 13 18	NP	14
682.4	Loose to medium dense, gray LOAM, trace gravel			5	2 5 8	NP	10
		15		6	1 4 5	NP	11
				7	1 3 5	NP	12
		20		8	2 6 8	NP	11
673.2	Very stiff to hard, brown CLAY LOAM, trace gravel			9	8 13 13	5.38 S	10
		25		10	6 8 13	2.70 S	12
664.2	Medium dense, brown SILT, trace gravel	30		11	13 12 18	5.33 S	10
				12	7 10 13	NP	39
662.0	Very stiff, gray SILTY CLAY LOAM to CLAY LOAM, trace gravel and sand lenses						
		35		13	5 8 10	2.87 B	18
655.2	Very dense, gray GRAVELLY SILT			14	25 60/5	NP	10
653.7	Boring terminated at 40.00 ft	40					
		45					
		50					

GENERAL NOTES

Begin Drilling: **04-25-2014** Complete Drilling: **04-25-2014**
Drilling Contractor: **GSG** Drill Rig: **6620DT Geoprobe**
Driller: **M&V** Logger: **M. de los Reyes** Checked by: **C. Marin**
Drilling Method: **3.25" HSA, 2.5' interval to 30', 5' interval thereafter**

WATER LEVEL DATA

While Drilling: **9.00 ft**
At Completion of Drilling: ***5.50 ft***
Time After Drilling: **NA**
Depth to Water: **NA**

The stratification lines represent the approximate boundary between soil types; the actual transition may be gradual.

WANGENGINC 811030I.GPJ WANGENG.GDT 5/30/14

Wang Engineering
wangeng@wangeng.com
1145 N Main Street
Lombard, IL 60148
Telephone: 630 953-9928
Fax: 630 953-9938

BORING LOG BC-04

WEI Job No.: 811-03-01

Client: **HR Green, Inc.**
Project: **US 30 from East Dugan to West of IL 47**
Location: **Sugar Grove, Kane County, IL**

Datum: NAVD 88
Elevation: 693.80 ft
North: 1856951.03 ft
East: 947348.43 ft
Station: 156+27.0
Offset: 21.6 LT

Elevation (ft)	SOIL AND ROCK DESCRIPTION	Depth (ft)	Sample Type / recovery	Sample No.	SPT Values (blw/6 in)	Qu (tsf)	Moisture Content (%)
693.3	6-inch thick, brown GRAVELLY SAND --SHOULDER--						
692.3	Brown SAND --FILL--			1	1 1 1	< 0.25 P	20
690.8	Very soft, brown, SILTY CLAY LOAM, trace gravel						
689.8	Brown SAND						
	Soft, brown CLAY	5		2	1 1 0	0.41 B	31
688.3	Dense to medium dense, brown to gray GRAVELLY SAND --Wet--			3	10 10 10	NP	11
		10		4	8 16 18	NP	9
682.3	Soft to medium stiff, gray CLAY LOAM to LOAM, trace to some gravel			5	8 5 3	0.33 B	10
680.8	Medium dense, brown SAND to GRAVELLY SAND						
		15		6	1 3 6	NP	10
				7	3 9 12	NP	9
675.1	Stiff to hard, brown CLAY LOAM, trace gravel	20		8	10 10 18	6.15 S	12
				9	53 40 48	> 4.50 P	11
		25		10	28 21 26		13
662.1	Very stiff, dark gray SILTY CLAY, trace gravel						
		30		11	11 15 20	2.95 S	9
				12	11 14 17	1.80 S	12
		35		13	5 6 9	2.62 B	25
		40		14	8 16 24	3.03 B	18
653.8	Boring terminated at 40.00 ft						
		45					
		50					

GENERAL NOTES

Begin Drilling: **04-29-2014** Complete Drilling: **04-29-2014**
Drilling Contractor: **GSG** Drill Rig: **6620DT Geoprobe**
Driller: **M&V** Logger: **S. Woods** Checked by: **C. Marin**
Drilling Method: **3.25" HSA, 2.5' interval to 30', 5' interval thereafter**

WATER LEVEL DATA

While Drilling: **6.00 ft**
At Completion of Drilling: **3.25 ft**
Time After Drilling: **NA**
Depth to Water: **NA**

The stratification lines represent the approximate boundary between soil types; the actual transition may be gradual.

WANGENGINC 811030I.GPJ WANGENG.GDT 5/30/14

COMPANY NAME:
PROJECT CONTACT:
CLIENT:
DATE PLOTTED: 10/14/2014 8:21:21 PM
FILE NAME: 045212-p9120113-boring-001.dgn
PLOT DRIVER: pdf.pltr
PEN TABLE: standard-trans.tbl

HRGreen.com
Illinois Professional Design Firm # 184-001322

USER NAME = dstancz	DESIGNED - SEC	REVISED -	
	CHECKED - RGB	REVISED -	
PLOT SCALE =	DRAWN - WJH	REVISED -	
PLOT DATE = 10/14/2014	CHECKED - RGB	REVISED -	

STATE OF ILLINOIS
DEPARTMENT OF TRANSPORTATION

SOIL BORING LOGS
STRUCTURE NO. 045-2122
SHEET NO. SE-7 OF SE-7 SHEETS

F.A.P. RTE.	SECTION	COUNTY	TOTAL SHEETS	SHEET NO.
	30-N(13)	KANE	219	140
		CONTRACT NO. 60X70		
	ILLINOIS	FED. AID PROJECT		

VILLAGE OF SUGAR GROVE WATER MAIN CONSTRUCTION

1. ALL WATER MAIN CONSTRUCTION SHALL BE IN ACCORDANCE WITH THE "STANDARD SPECIFICATIONS FOR WATER AND SEWER MAIN CONSTRUCTION IN ILLINOIS", LATEST EDITION AND REVISIONS THERETO, THESE IMPROVEMENT PLANS AND DETAILS, SPECIAL PROVISIONS AND IN ACCORDANCE WITH CODES AND ORDINANCES OF THE VILLAGE OF SUGAR GROVE, ILLINOIS. IN CASE OF CONFLICT WITH VILLAGE CODES, DRAWINGS, AND THESE STANDARD NOTES, THE VILLAGE ENGINEER SHALL BE CONTACTED TO CONFIRM WHICH IS CORRECT.

2. ALL WATER MAIN SHALL BE DUCTILE IRON PIPE CLASS 52 WITH EITHER MECHANICAL OR PUSH-ON JOINTS AND SHALL CONFORM TO ANSI A21.51, AWWA C151 AND ANSI A21.11, AWWA C111. PIPE SHALL BE MANUFACTURED IN THE UNITED STATES.

3. ALL FITTINGS SHALL BE COMPACT DUCTILE IRON AND SHALL CONFORM TO ANSI/AWWA C153/421.53-84. FITTINGS SHALL BE UL LISTED CLASS 350, TYLER, GRIFFIN OR APPROVED EQUAL. FITTINGS SHALL BE MANUFACTURED IN THE UNITED STATES.

4. ALL PIPE AND FITTINGS SHALL BE CEMENT LINED IN ACCORDANCE WITH ANSI/AWWA C104/421.4.

5. ALL FITTINGS SHALL BE MECHANICAL JOINT AND INSTALLED WITH RETAINER GLANDS UNLESS OTHERWISE SHOWN ON THE DRAWINGS.

6. LONG RADIUS CURVES, EITHER HORIZONTAL OR VERTICAL, MAY BE LAID WITH STANDARD PIPE BY DEFLECTIONS AT THE JOINTS. MAXIMUM DEFLECTIONS AT PIPE JOINTS AND LAYING RADIUS FOR THE VARIOUS PIPE LENGTHS SHALL BE IN ACCORDANCE WITH ANSI/AWWA C600. WHEN RUBBER GASKETED PIPE IS LAID ON A CURVE, THE PIPE SHALL BE JOINTED IN A STRAIGHT ALIGNMENT AND THEN DEFLECTED TO THE CURVED ALIGNMENT. TRENCHES SHALL BE MADE WIDER ON CURVES FOR THIS PURPOSE.

7. SLEEVES SHALL BE ROCKWELL D.I. COUPLING TYPE 441 OR EQUAL. SLEEVES SHALL BE PROVIDED AT LOCATIONS SHOWN ON THE PLANS OR AS REQUIRED. THE COST OF SLEEVES IS CONSIDERED AS INCIDENTAL TO THE COST OF THE PROJECT.

8. ALL GATE VALVES SHALL HAVE A NON-RISING STEM, SHALL HAVE A STANDARD OPERATING NUT AND SHALL OPEN IN A COUNTER-CLOCKWISE DIRECTION. GATE VALVES SHALL BE AMERICAN FLOW CONTROL SERIES 2500 DUCTILE IRON RESILIENT WEDGE GATE VALVES IN ACCORDANCE WITH AWWA C-515 STANDARD. ALL GATE VALVES SHALL BE INSTALLED IN VALVE VAULTS.

9. ALL VALVE BOXES SHALL BE HEAVY WALL HIGH DENSITY POLYETHYLENE AMERICAN FLOW CONTROL TRENCH ADAPTERS. LIDS TO BE MARKED "WATER" (VALVE BOX EXTENSIONS IF REQUIRED ARE CONSIDERED INCIDENTAL). OPEN GRADED (CA-7) LIMESTONE SHALL BE UTILIZED TO BACKFILL AROUND THE OPERATING NUT ON ALL VALVE BOXES TO PREVENT MUD FROM PENETRATING THE VALVE BOXES.

10. ALL HYDRANTS SHALL BE IN ACCORDANCE WITH SECTION FOUR (4) OF AWWA C502-54 STANDARD AND SHALL BE AN AMERICAN FLOW CONTROL/WATEROUS PACER MODEL NO. WB-67-250 (BREAK AWAY STYLE TRAFFIC DESIGN) WITH ONE 4 •G STEAMER NOZZLE AND TWO 2 •G HOSE OUTLETS, OF WHICH THE THREADS CONFORM WITH THE STANDARDS OF THE VILLAGE OF SUGAR GROVE, ILLINOIS. ALL HYDRANTS SHALL HAVE AN AUXILIARY GATE VALVE. HYDRANT INSTALLATIONS SHALL HAVE 5.5' DEPTH OF COVER. FIRE HYDRANTS SHALL BE PLACED 3 FOOT FROM THE BACK OF CURB TO THE CENTER OF THE HYDRANT, OR WHERE THERE IS NO CURB AND GUTTER, THE FACE OF THE PUMPER NOZZLE SHALL BE LOCATED FIVE FEET (5') FROM THE PAVED ROAD EDGE. CENTER LINE OF PUMPER NOZZLE SHALL BE EIGHTEEN INCHES (18") TO TWENTY INCHES (20") ABOVE FINISH GRADE LINE (SIDEWALK TO CURB).

11. ALL FIRE HYDRANTS SHALL BE FACTORY PAINTED.

12. ALL MECHANICAL JOINT FITTINGS, VALVES AND HYDRANTS SHALL BE RESTRAINED WITH RETAINER GLANDS. RETAINER GLANDS SHALL BE UNI-FLANGE SERIES 1400 WEDGE ACTION RETAINER GLAND.

13. ALL PRESSURE TAPS TO AN EXISTING VILLAGE MAIN SHALL BE MADE WITH AN AMERICAN FLOW CONTROL SERIES 2800 COMPACT DUCTILE IRON MECHANICAL JOINT TAPPING SLEEVE AND AN AMERICAN FLOW CONTROL SERIES 2500 DUCTILE IRON RESILIENT WEDGE TAPPING VALVE (MJ X FL) AND SHALL BE CONSTRUCTED IN A FIVE (5) FOOT MINIMUM DIAMETER VALVE VAULT. ALL TAPS SHALL BE PERFORMED BY THE CONTRACTOR AFTER PAYMENT OF APPLICABLE CONNECTION FEES AND SHALL BE WITNESSED BY THE VILLAGE. THE VILLAGE ENGINEER SHOULD BE NOTIFIED 48 HOURS IN ADVANCE OF ANY TAP.

14. ALL TEES, BENDS, VALVES, AND FIRE HYDRANTS SHALL BE ADEQUATELY SUPPORTED WITH A CONCRETE BASE, AND SUPPORTED LATERALLY WITH PRECAST CONCRETE THRUST BLOCKING (NOT POURED-IN-PLACE) AGAINST UNDISTURBED EARTH.

15. ALL WATER MAINS SHALL HAVE A MINIMUM DEPTH OF COVER OF 5.5' FROM THE FINISH GRADE TO THE TOP OF PIPE OR AS NOTED ON PLANS.

16. ALL VERTICAL WATER MAIN ADJUSTMENTS SHALL BE ACCOMPLISHED BY DEFLECTION, NOT BENDS IN THE WATER MAIN.

17. ALL WATER SERVICES SHALL BE ONE (1H) INCH DIAMETER TYPE "K" COPPER PIPE WITH COMPRESSION CONNECTIONS. NO JOINTS WILL BE ALLOWED BETWEEN THE CORPORATION STOP AND THE CURB STOP. MATERIAL AND INSTALLATION WILL BE IN GENERAL ACCORDANCE WITH AWWA C800. THE UNDERGROUND WATER SERVICE PIPE AND THE BUILDING SEWER SHALL BE NOT LESS THAN TEN FEET (10') APART HORIZONTALLY AND SHALL BE SEPARATED BY UNDISTURBED OR COMPACTED EARTH.

18. ALL CORPORATION STOPS, CURB STOPS, AND CURB BOXES SHALL BE AS FOLLOWS:

BRAND	MUELLER		
SIZE	1"	1.5"	2"
CORPORATION	B-25008	B-25008	B-25008
CURB STOP	B-25155	B-25155	B-25155
CURB BOX	H-10302	H-10302-9900	H-10302-9900

	FORD		
	1"	1.5"	2"
CORPORATION	FB1000-4-Q	FB1000-6-Q	FB1000-7-Q
CURB STOP	B44-444-MQ	B44-666 MQ	B44-777 MQ
CURB BOX	EM2-55-67	EM2-55-67	EM2-55-67

19. THE BUFFALO BOXES SHALL BE SET IN THE PARKWAY BETWEEN THE BACK OF CURB AND THE SIDEWALK. LONG SERVICES SHALL BE SET AT THE MID-POINT BETWEEN THE BACK OF CURB. SHORT SERVICES SHALL BE SET ONE FOOT OFF OF THE SIDEWALK.

20. THE CONTRACTOR SHALL OBTAIN, ERECT, MAINTAIN AND REMOVE ALL SIGNS, BARRICADES, FLAGMEN AND OTHER CONTROL DEVICES AS MAY BE NECESSARY FOR THE PURPOSE OF REGULATING, WARNING OR GUIDING TRAFFIC. PLACEMENT AND MAINTENANCE OF ALL TRAFFIC CONTROL DEVICES SHALL BE IN ACCORDANCE WITH THE APPLICABLE PARTS OF ARTICLE 107.14 OF THE STANDARD SPECIFICATIONS AND THE ILLINOIS MANUAL ON UNIFORM TRAFFIC CONTROL DEVICES FOR STREETS AND HIGHWAYS. CONTRACTOR SHALL FURNISH A TRAFFIC CONTROL PLAN FOR IDOT OR VILLAGE APPROVAL IF REQUIRED.

21. ALL WORK AND MATERIALS SHALL BE IN ACCORDANCE WITH CODE REQUIREMENTS.

22. THE CONTRACTOR SHALL RESTORE ANY AREA DISTURBED TO A CONDITION EQUAL TO OR BETTER THAN ITS ORIGINAL USE. THIS SHALL INCLUDE FINISH GRADING, ESTABLISHMENT OF A VEGETATIVE COVER (SEEDING OR SOD), GENERAL CLEANUP AND PAVEMENT REPLACEMENT.

23. THE CONTRACTOR SHALL BE RESPONSIBLE FOR PROVIDING SAFE AND HEALTHFUL WORKING CONDITIONS THROUGHOUT THE CONSTRUCTION OF THE PROPOSED IMPROVEMENTS.

24. BEFORE ACCEPTANCE BY THE VILLAGE ALL WORK SHALL BE INSPECTED AND APPROVED BY THE VILLAGE OR ITS REPRESENTATIVES.

25. EASEMENTS FOR THE EXISTING UTILITIES, BOTH PUBLIC AND PRIVATE, AND UTILITIES WITHIN PUBLIC RIGHTS-OF-WAY ARE SHOWN ON THE PLANS ACCORDING TO AVAILABLE RECORDS. THE CONTRACTOR SHALL BE RESPONSIBLE FOR DETERMINING THE EXACT LOCATION IN THE FIELD OF THESE UTILITY LINES AND THEIR PROTECTION FROM DAMAGE DUE TO CONSTRUCTION OPERATIONS. IF EXISTING UTILITY LINES OF ANY NATURE ARE ENCOUNTERED WHICH CONFLICT IN LOCATION WITH NEW CONSTRUCTION, THE CONTRACTOR SHALL NOTIFY THE ENGINEER SO THAT THE CONFLICT MAY BE RESOLVED.

26. WATER MAINS AND WATER SERVICE LINES SHALL BE PROTECTED FROM SANITARY SEWERS, STORM SEWERS, COMBINED SEWERS, HOUSE SEWER SERVICE CONNECTIONS AND DRAINS IN ACCORDANCE WITH TITLE 35: ENVIRONMENTAL PROTECTION AGENCY SUBTITLE F: PUBLIC WATER SUPPLIES, CHAPTER II: ENVIRONMENTAL PROTECTION AGENCY, PARTS 651-654 TECHNICAL POLICY STATEMENTS, SECTION 653.119.

27. WHENEVER POSSIBLE, A WATER MAIN MUST BE LAID AT LEAST TEN FEET HORIZONTALLY FROM ANY EXISTING OR PROPOSED DRAIN OR SEWER LINE. SHOULD LOCAL CONDITIONS EXIST WHICH WOULD PREVENT A LATERAL SEPARATION OF TEN FEET, A WATER MAIN MAY BE LAID CLOSER THAN TEN FEET TO A STORM OR SANITARY SEWER PROVIDED THAT THE WATER MAIN INVERT IS AT LEAST EIGHTEEN INCHES ABOVE THE CROWN OF THE SEWER, AND IS EITHER IN A SEPARATE TRENCH OR IN THE SAME TRENCH ON AN UNDISTURBED EARTH SHELF LOCATED TO ONE SIDE OF THE SEWER. IF IT IS IMPOSSIBLE TO OBTAIN PROPER HORIZONTAL OR VERTICAL SEPARATION AS DESCRIBED ABOVE, THEN THE SEWER MUST ALSO BE CONSTRUCTED OF WATER MAIN TYPE MATERIAL (DUCTILE IRON PIPE WITH SLIP-ON OR MECHANICAL JOINTS, PRESTRESSED REINFORCED CONCRETE PIPE WITH ASTM C-443 JOINTS, ETC.) AND PRESSURE TESTED TO THE MAXIMUM EXPECTED SURCHARGE HEAD TO ASSURE WATER TIGHTNESS BEFORE BACKFILLING.

28. WHENEVER WATER MAINS MUST CROSS HOUSE SEWERS, STORM SEWERS OR SANITARY SEWERS, THE WATER MAIN SHALL BE LAID AT SUCH AN ELEVATION THAT THE INVERT OF THE WATER MAIN IS EIGHTEEN INCHES ABOVE THE CROWN OF THE DRAIN OR SEWER. THIS VERTICAL SEPARATION MUST BE MAINTAINED FOR THAT PORTION OF THE WATER MAIN LOCATED WITHIN TEN FEET HORIZONTALLY OF ANY SEWER OR DRAIN CROSSED. THIS MUST BE MEASURED AS THE NORMAL DISTANCE FROM THE WATER MAIN TO THE DRAIN OR SEWER. IF IT IS IMPOSSIBLE TO OBTAIN THE PROPER VERTICAL SEPARATION AS DESCRIBED ABOVE OR IF IT IS NECESSARY FOR THE WATER MAIN TO PASS UNDER A SEWER OR DRAIN, THEN THE SEWER MUST BE CONSTRUCTED OF WATER MAIN TYPE MATERIAL (AS NOTED IN ITEM 27). THIS CONSTRUCTION MUST EXTEND ON EACH SIDE OF THE CROSSING UNTIL THE NORMAL DISTANCE FROM THE WATER MAIN TO THE SEWER OR DRAIN LINE IS AT LEAST TEN FEET. IN MAKING SUCH CROSSINGS, CENTER A LENGTH OF WATER MAIN PIPE OVER/UNDER THE SEWER TO BE CROSSED SO THAT THE JOINTS WILL BE EQUIDISTANT FROM THE SEWER AND AS REMOTE THEREFROM AS POSSIBLE. WHERE A WATER MAIN MUST CROSS UNDER A SEWER, A VERTICAL SEPARATION OF EIGHTEEN INCHES BETWEEN THE INVERT OF THE SEWER AND THE CROWN OF THE WATER MAIN SHALL BE MAINTAINED, ALONG WITH MEANS TO SUPPORT THE LARGER SIZED SEWER LINES TO PREVENT THEIR SETTLING AND BREAKING THE WATER MAIN.

29. VALVE VAULT FRAMES SHALL BE IDOT TYPE 1 (STANDARD 604001) AND ALL LIDS SHALL HAVE 9SUGAR GROVEI AND 9WATERI CAST INTO THEM.

30. VALVE VAULTS SHALL BE ADJUSTED WITH PRECAST CONCRETE ADJUSTING RINGS TO A MAXIMUM OF EIGHT (81) INCHES.

31. HYDROSTATIC TESTS - THE CONTRACTOR SHALL PERFORM HYDROSTATIC TESTS IN ACCORDANCE WITH DIVISION IV, SECTION 41 OF THE STANDARD SPECIFICATIONS FOR WATER AND SEWER MAIN CONSTRUCTION IN ILLINOIS, LATEST EDITION, AND APPLICABLE PROVISIONS OF AWWA C-600 AND C-603. THE WATER MAINS SHALL BE PRESSURE TESTED AT 150 PSI. ALLOWABLE LEAKAGE SHALL BE AS SET FORTH IN AWWA C-600 LATEST EDITION. THE MAXIMUM ALLOWABLE LEAKAGE SHALL BE BASED OFF OF THE FIRST 1,000 FEET OF PIPE (I.E. IF 2,000 FEET OF PIPE IS BEING TESTED, THE ALLOWABLE LEAKAGE WILL BE BASED ON THE FIRST 1,000 FEET ONLY.) THE DURATIONOF THE TEST SHALL BE FOR TWO HOURS MINIMUM, AND THE MAXIMUM PRESSURE DROP DURING THIS TWO HOUR PERIOD IS A CUMULATIVE 2 PSI. TO MEET THE TESTING REQUIREMENTS, THE WATER MAIN SHALL SATISFY THE PRESSURE DROP AND THE ALLOWABLE LEAKAGE REQUIREMENTS. THE GAUGE WILL BE ZEROED OUT BEFORE THE PRESSURE TEST BEGINS. IN ADDITION, THE PRESSURE GAUGE USED IN THE HYDROSTATIC TEST SHALL BE IN 2 PSI INCREMENTS OR LESS AND HAVE A MINIMUM OF A 3•I DIAMETER FACE.

32. DISINFECTION OF THE WATER MAINS - UPON COMPLETION OF THE NEWLY LAID WATER MAINS, THE WATER MAINS SHALL BE DISINFECTED IN ACCORDANCE WITH THE AMERICAN WATER WORKS ASSOCIATION, PROCEDURE DESIGNATION, AWWA C-651, LATEST EDITION. THE CONTRACTOR IS RESPONSIBLE FOR COLLECTING SAMPLES AND HAVING BACTERIOLOGICAL TESTING PERFORMED AS REQUIRED BY THE IEPA. THE CONTRACTOR SHALL FURNISH TO THE VILLAGE THE REQUIRED DOCUMENTATION, TEST RESULTS, ETC., REQUIRED BY THE IEPA FOR PLACING THE WATER MAINS OR SERVICE LINES IN SERVICE AND/OR SECURING AN OPERATING PERMIT.

33. WATER VALVES AND FIRE HYDRANTS SHALL BE OPERATED BY VILLAGE OF SUGAR GROVE PERSONNEL, ONLY.

34. THE DEVELOPER/CONTRACTOR SHALL CONTACT THE VILLAGE ENGINEER TO SCHEDULE OPERATION OF VALVES, FLUSH AND FILL, PRESSURE TEST, CHLORINATION, AND SAMPLING. THE VILLAGE ENGINEER WILL CONTACT THE VILLAGE ACCORDINGLY. THE DEVELOPER/CONTRACTOR SHALL PROVIDE 48 HOURS NOTICE PRIOR TO PERFORMING ANY OF THESE WORK ITEMS. THE FOLLOWING ACTIVITIES MUST BE SCHEDULED WITH THE VILLAGE ENGINEER ON INDEPENDENT DAYS:
    - FLUSH AND FILL (WATER MAIN/SERVICE SHALL THEN BE PRE-TESTED.)
    - PRESSURE TEST (THE GAUGE SHALL BE ZEROED OUT BEFORE THE START OF THE TEST.)
    - CHLORINATION
    - 1ST DAY OF SAMPLING
    - 2ND DAY OF SAMPLING

35. THE VILLAGE SHALL WITNESS ALL SERVICE TAPS GREATER THAN 1I IN DIAMETER. ACCORDINGLY, THE DEVELOPER/CONTRACTOR SHALL CONTACT THE VILLAGE ENGINEER 48 HOURS IN ADVANCE OF THE TAP.

36. FOX METRO WATER RECLAMATION DISTRICT SHALL BE CONTACTED BY THE DEVELOPER/CONTRACTOR TO OBSERVE THE CONSTRUCTION OF ALL WATER SERVICE LINES TO A BUILDING/HOUSE. THEIR OBSERVATION IS REQUIRED FROM THE SERVICE VALVE TO THE BUILDING/HOUSE.

37. ALL WATER MAIN SHALL BE PRE-PRESSURE TESTED PRIOR TO THE ACTUAL PRESSURE TEST THE VILLAGE ENGINEER AND/OR THE VILLAGE WITNESSES.

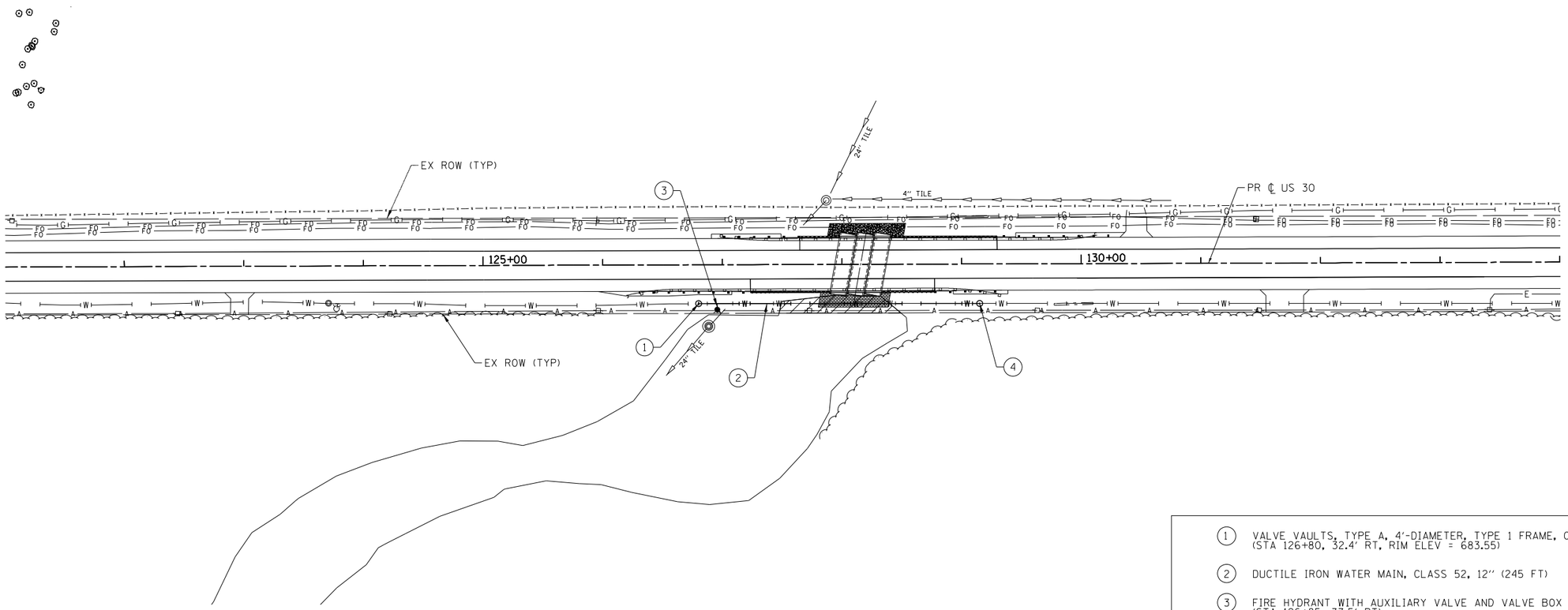

1. VALVE VAULTS, TYPE A, 4'-DIAMETER, TYPE 1 FRAME, CLOSED LID (STA 126+80, 32.4' RT, RIM ELEV = 683.55)
2. DUCTILE IRON WATER MAIN, CLASS 52, 12" (245 FT)
3. FIRE HYDRANT WITH AUXILIARY VALVE AND VALVE BOX (STA 126+85, 37.5' RT)
4. VALVE VAULTS, TYPE A, 4'-DIAMETER, TYPE 1 FRAME, CLOSED LID (STA 129+15, 33.0' RT, RIM ELEV = 684.50)
5. DUCTILE IRON WATER MAIN FITTINGS 12" 45.00 DEGREE BEND (EACH)

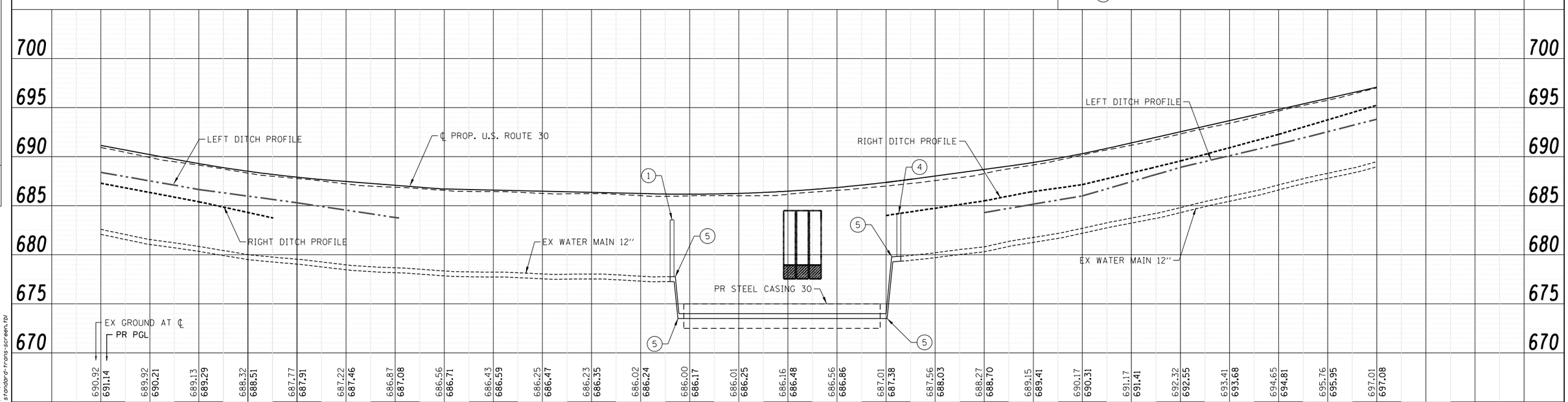

PLAN — SURVEYED / PLOTTED / ALIGNMENT CHECKED / RT. OF WAY CHECKED / CADD FILE NAME / NOTE BOOK NO. / BY / DATE

PROFILE — SURVEYED / PLOTTED / GRADES CHECKED / B.M. NOTED / STRUCTURE NOTATNS CHKD / NOTE BOOK NO. / BY / DATE

COMPANY NAME:
PROJECT CONTACT:
CLIENT:
DATE PLOTTED: 10/20/2014 4:26 PM
FILE NAME: p9120113-sht-details-WaterMainRelocationPlan.dgn
PLOT DRIVER: pdf.pltt
PEN TABLE: standard-trans-screen.tbl

HRGreen.com
Illinois Professional Design Firm # 184-001322

USER NAME = dstancz	DESIGNED - JRM	REVISED -	
FILE NAME = p9120113-sht-details-WaterMainRelocationPlan.dgn	DRAWN - DS	REVISED -	
PLOT SCALE = N.T.S.	CHECKED - TH	REVISED -	
PLOT DATE = 10/20/2014	DATE - 10/20/14	REVISED -	

STATE OF ILLINOIS
DEPARTMENT OF TRANSPORTATION

WATER MAIN RELOCATION PLAN

SCALE: N.T.S. | SHEET NO. 2 OF 5 SHEETS | STA. TO STA.

F.A.P. RTE.	SECTION	COUNTY	TOTAL SHEETS	SHEET NO.
573	30-N(13)	KANE	219	142

CONTRACT NO. 60X70

FED. ROAD DIST. NO. | ILLINOIS | FED. AID PROJECT

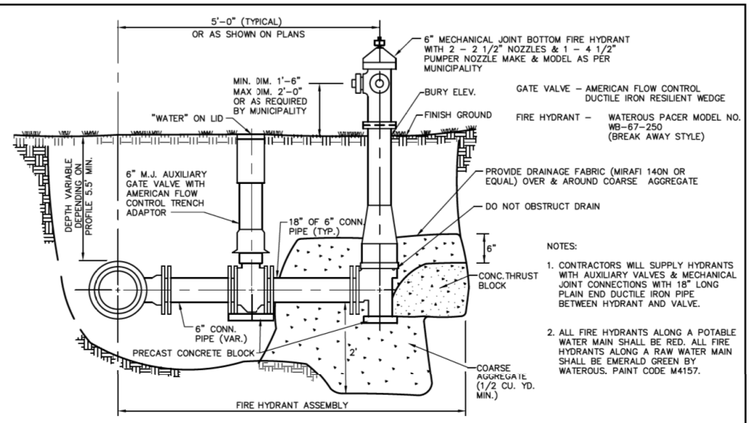

NOTES:

1. CONTRACTORS WILL SUPPLY HYDRANTS WITH AUXILIARY VALVES & MECHANICAL JOINT CONNECTIONS WITH 18" LONG PLAIN END DUCTILE IRON PIPE BETWEEN HYDRANT AND VALVE.
2. ALL FIRE HYDRANTS ALONG A POTABLE WATER MAIN SHALL BE RED. ALL FIRE HYDRANTS ALONG A RAW WATER MAIN SHALL BE EMERALD GREEN BY WATEROUS. PAINT CODE M4157.

FIRE HYDRANT ASSEMBLY INSTALLATION

Village of Sugar Grove, 10 Municipal Drive, Sugar Grove, Illinois 60554, Phone: (630) 466-4507	SCALE: N.T.S.	DATE: 8/14/07	FOLDER: SG-WA	DRAWING NUMBER: 01	DRAWN BY: CLN	REVISED:

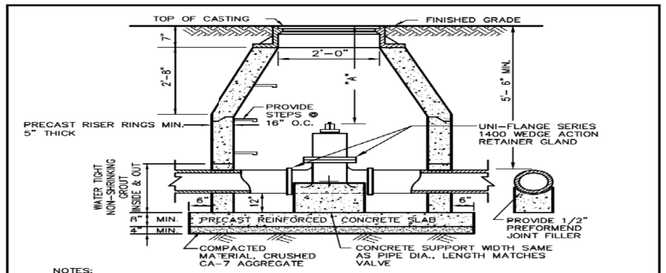

NOTES:

1. VALVES FOR ALL WATER MAINS SHALL BE AMERICAN FLOW CONTROL DUCTILE IRON RESILIENT WEDGE GATE VALVES, IN ACCORDANCE WITH AWWA C-509-80 STANDARD. ALL VALVES SHALL BE INSTALLED IN VAULTS.
2. IF "A" IS GREATER THAN 6'-0" PROVIDE AN EXTENSION ON THE OPERATING NUT.
3. VALVE VAULT SHALL HAVE A DIA. OF 48" FOR 8" AND SMALLER VALVES AND 60" FOR 10" AND LARGER VALVES. PRECAST REINFORCED CONCRETE MANHOLE SECTIONS SHALL BE IN ACCORDANCE WITH A.S.T.M. C-478 AND SET IN BUTYL ROPE.
4. FRAME AND LID SHALL BE IDOT TYPE 1. THE WORDS "SUGAR GROVE" AND "WATER" SHALL BE CAST INTO THE LID.
5. A MAXIMUM OF 8" OF ADJUSTING RINGS SHALL BE USED. NO MORE THAN 2 ADJUSTING RINGS ARE ALLOWED. BITUMINOUS MASTIC BED FOR EACH RING AND CASTING IS REQUIRED.
6. AT EACH JOINT, APPLY A CONTINUOUS LAYER OF PREFORMED NON-HARDENING BITUMINOUS MASTIC MATERIAL.
7. VALVE MUST ALIGN WITH THE CENTER OF VAULT OPENINGS.
8. CONES MUST BE CONCENTRIC UNLESS A PRESSURE TAP VALVE IS PROVIDED.

VALVE VAULT INSTALLATION

Village of Sugar Grove, 10 Municipal Drive, Sugar Grove, Illinois 60554, Phone: (630) 466-4507	SCALE: N.T.S.	DATE: 03-26-07	FOLDER: SG-WA	DRAWING NUMBER: 02	DRAWN BY: JGG	REVISED:

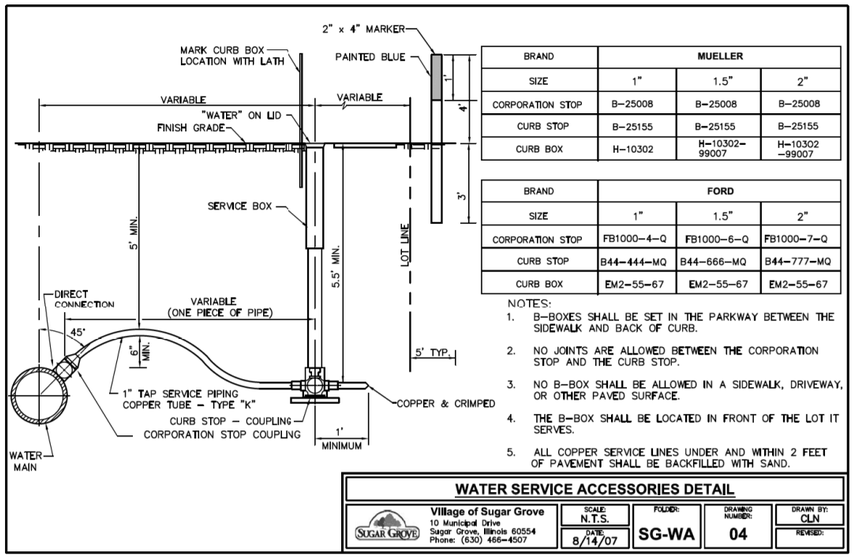

BRAND	MUELLER		
SIZE	1"	1.5"	2"
CORPORATION STOP	B-25008	B-25008	B-25008
CURB STOP	B-25155	B-25155	B-25155
CURB BOX	H-10302	H-10302-99007	H-10302-99007

BRAND	FORD		
SIZE	1"	1.5"	2"
CORPORATION STOP	FB1000-4-Q	FB1000-6-Q	FB1000-7-Q
CURB STOP	B44-444-MQ	B44-666-MQ	B44-777-MQ
CURB BOX	EM2-55-67	EM2-55-67	EM2-55-67

NOTES:

1. B-BOXES SHALL BE SET IN THE PARKWAY BETWEEN THE SIDEWALK AND BACK OF CURB.
2. NO JOINTS ARE ALLOWED BETWEEN THE CORPORATION STOP AND THE CURB STOP.
3. NO B-BOX SHALL BE ALLOWED IN A SIDEWALK, DRIVEWAY, OR OTHER PAVED SURFACE.
4. THE B-BOX SHALL BE LOCATED IN FRONT OF THE LOT IT SERVES.
5. ALL COPPER SERVICE LINES UNDER AND WITHIN 2 FEET OF PAVEMENT SHALL BE BACKFILLED WITH SAND.

WATER SERVICE ACCESSORIES DETAIL

Village of Sugar Grove, 10 Municipal Drive, Sugar Grove, Illinois 60554, Phone: (630) 466-4507	SCALE: N.T.S.	DATE: 8/14/07	FOLDER: SG-WA	DRAWING NUMBER: 04	DRAWN BY: CLN	REVISED:

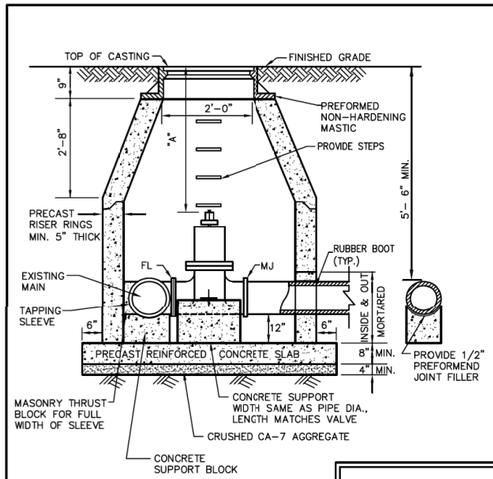

NOTES:

1. IF "A" IS GREATER THAN 6'-0" PROVIDE AN EXTENSION ON THE OPERATING NUT.
2. VALVE VAULTS WITH PRESSURE TAPS HAVE A DIA. OF 60".
3. A MAXIMUM OF 8" OF ADJUSTING RINGS SHALL BE USED. NO MORE THAN TWO ADJUSTING RINGS ARE ALLOWED. CONCRETE RINGS SHALL BE SET IN PREFORMED NON-HARDENING BITUMINOUS MASTIC.
4. ALL PRESSURE TAPS SHALL BE MADE WITH AN AMERICAN FLOW CONTROL SERIES 2800 COMPACT DUCTILE IRON MECHANICAL JOINT TAPPING SLEEVE AND AN AMERICAN FLOW CONTROL SERIES 2500 DUCTILE IRON RESILIENT WEDGE TAPPING VALVE (MJ X FL).
5. VALVE MUST ALIGN WITH THE CENTER OF VAULT OPENINGS.
6. AN ECCENTRIC CONE IS REQUIRED FOR PRESSURE TAP VALVES.
7. AT EACH JOINT, APPLY A CONTINUOUS LAYER OF NON-HARDENING PREFORMED BITUMINOUS MASTIC MATERIAL.
8. FRAME AND LID SHALL BE IDOT TYPE 1. THE WORDS "SUGAR GROVE" AND "WATER" SHALL BE CAST INTO THE LID (SEE MANHOLE LID DETAIL).

PRESSURE CONNECTION

Village of Sugar Grove, 10 Municipal Drive, Sugar Grove, Illinois 60554, Phone: (630) 466-4507	SCALE: N.T.S.	DATE: 8/14/07	FOLDER: SG-WA	DRAWING NUMBER: 03	DRAWN BY: CLN	REVISED:

COMPANY NAME:
PROJECT CONTACT:
CLIENT:
DATE PLOTTED: 10/14/2014 8:27:50 PM
FILE NAME: p9120113-sht-details-040-Fire Hydrant Assembly Installation.dgn
PLOT DRIVER: pdf.pltˆ
PEN TABLE: standard-trans.tbl

HRGreen.com
Illinois Professional Design Firm # 184-001322

USER NAME = dstancz	DESIGNED - JRM	REVISED -	
FILE NAME = p9120113-sht-details-040-Fire Hydrant Assembly Installation.dgn	DRAWN - DS	REVISED -	
PLOT SCALE = N.T.S.	CHECKED - TH	REVISED -	
PLOT DATE = 10/14/2014	DATE - 10/14/14	REVISED -	

STATE OF ILLINOIS
DEPARTMENT OF TRANSPORTATION

VILLAGE OF SUGAR GROVE DETAILS

SCALE: N.T.S. | SHEET NO. 3 OF 5 SHEETS | STA. | TO STA.

F.A.P. RTE.	SECTION	COUNTY	TOTAL SHEETS	SHEET NO.
573	30-N(13)	KANE	219	143

CONTRACT NO. 60X70

FED. ROAD DIST. NO. | ILLINOIS | FED. AID PROJECT

PROPOSED SEWER (OR WATER) IS LOCATED 10 FEET OR MORE FROM EXISTING WATER (OR SEWER).

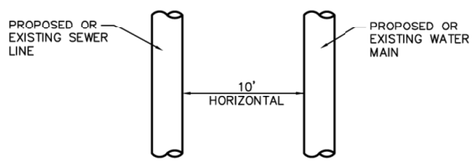

PLAN VIEW

PROPOSED SEWER LINE BELOW EXISTING WATER MAIN WITH 18" MINIMUM SEPARATION.

GUIDELINES

1. PROVIDE ADEQUATE SUPPORT FOR EXISTING WATER MAIN TO PREVENT DAMAGE DUE TO SETTLEMENT OF SEWER TRENCH.
2. MAINTAIN 18" MINIMUM VERTICAL SEPARATION FOR 10 FEET HORIZONTALLY.

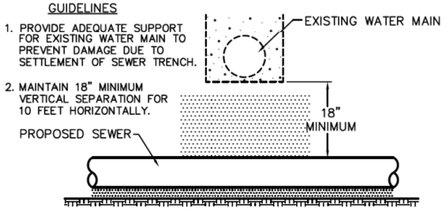

PROPOSED SEWER (OR WATER) IS LOCATED LESS THAN 10 FEET FROM EXISTING WATER (OR SEWER).

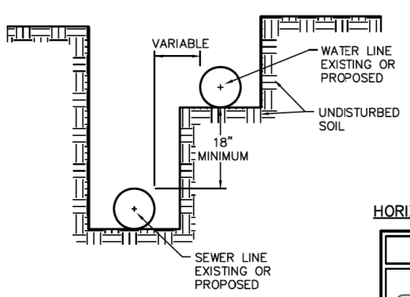

HORIZONTAL

PROPOSED SEWER LINE BELOW EXISTING WATER MAIN WITH LESS THAN 18" MINIMUM SEPARATION.

NOTE: CLASS IV MATERIAL TO BE COMPACTED TO 95% OF STANDARD PROCTOR MAXIMUM DENSITY. DENSITY.

GUIDELINES

1. OMIT SELECT GRANULAR CRADLE AND GRANULAR BACKFILL TO ONE (1) FOOT OVER TOP OF PIPE AND USE SELECT EXCAVATED MATERIAL (CLASS IV) AND COMPACT FOR 10 FEET ON EITHER SIDE OF WATER MAIN.

2a. CONSTRUCT 10 FEET OF PROPOSED SEWER OF WATER MAIN MATERIAL AND PRESSURE TEST, OR;
b. USE 10 FEET OF CASING FOR PROPOSED SEWER AND SEAL ENDS OF CASING.

3. POINT LOADS SHALL NOT BE ALLOWED BETWEEN SEWER OR SEWER CASING AND WATER MAIN.
4. PROVIDE ADEQUATE SUPPORT FOR EXISTING WATER MAIN TO PREVENT DAMAGE DUE TO SETTLEMENT OF SEWER TRENCH.

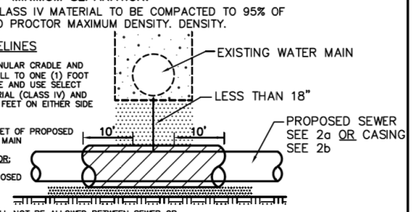

VERTICAL

WATER & SEWER SEPARATION REQUIREMENTS

Village of Sugar Grove	SCALE:	FOLDER:	DRAWING NUMBER:	DRAWN BY:
10 Municipal Drive Sugar Grove, Illinois 60554 Phone: (630) 466-4507	N.T.S.	SG-WA	05	CLN
	DATE: 5/18/07			REVISED:

PROPOSED WATER MAIN ABOVE EXISTING SEWER LINE WITH 18" MINIMUM SEPARATION.

NOTE: CLASS IV MATERIAL SHALL BE COMPACTED TO 95% OF STANDARD PROCTOR MAXIMUM DENSITY.

GUIDELINES

1. OMIT SELECT GRANULAR CRADLE AND GRANULAR BACKFILL TO ONE (1) FOOT OVER TOP OF PIPE AND USE SELECT EXCAVATED MATERIAL (CLASS IV) AND COMPACT FOR 10 FEET ON EITHER SIDE OF SEWER LINE.
2. IF SELECT GRANULAR BACKFILL EXISTS, REMOVE WITHIN WIDTH OF EXISTING SEWER LINE TRENCH AND REPLACE WITH SELECT EXCAVATED MATERIAL (CLASS IV) AND COMPACT.

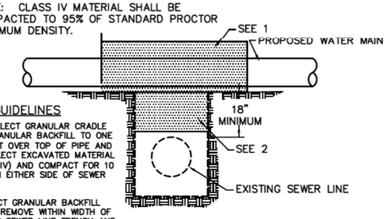

PROPOSED WATER MAIN BELOW EXISTING SEWER LINE WITH 18" MINIMUM SEPARATION.

NOTE: CLASS IV MATERIAL SHALL BE COMPACTED TO 95% OF STANDARD PROCTOR MAXIMUM DENSITY.

GUIDELINES

1. OMIT SELECT GRANULAR CRADLE AND GRANULAR BACKFILL TO ONE (1) FOOT OVER TOP OF PIPE AND USE SELECT EXCAVATED MATERIAL (CLASS IV) AND COMPACT FOR 10 FEET ON EITHER SIDE OF SEWER LINE.
2. IF SELECT GRANULAR BACKFILL EXISTS, REMOVE WITHIN WIDTH OF EXISTING SEWER LINE TRENCH AND REPLACE WITH SELECT EXCAVATED MATERIAL (CLASS IV) AND COMPACT.
3. PROVIDE ADEQUATE SUPPORT FOR EXISTING SEWER LINE TO PREVENT DAMAGE DUE TO SETTLEMENT.

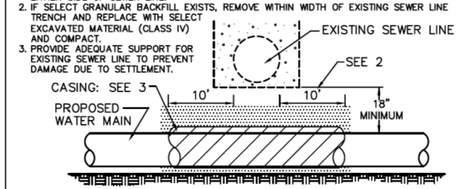

PROPOSED WATER MAIN ABOVE EXISTING SEWER LINE WITH LESS THAN 18" SEPARATION.

NOTE: CRUSHED CA-7 AGGREGATE SHALL BE COMPACTED TO 95% OF STANDARD PROCTOR MAXIMUM DENSITY.

GUIDELINES

1. OMIT SELECT GRANULAR CRADLE AND GRANULAR BACKFILL TO ONE (1) FOOT OVER TOP OF PIPE AND USE SELECT EXCAVATED MATERIAL (CLASS IV) AND COMPACT FOR 10 FEET ON EITHER SIDE OF SEWER LINE.
2. IF SELECT GRANULAR BACKFILL EXISTS, REMOVE WITHIN WIDTH OF EXISTING SEWER LINE TRENCH AND REPLACE WITH SELECT EXCAVATED MATERIAL (CLASS IV) AND COMPACT.
3. USE A CASING FOR PROPOSED WATER MAIN AND SEAL ENDS OF CASING
4. POINT LOADS SHALL NOT BE ALLOWED BETWEEN WATER MAIN OR WATER MAIN CASING AND SEWER.

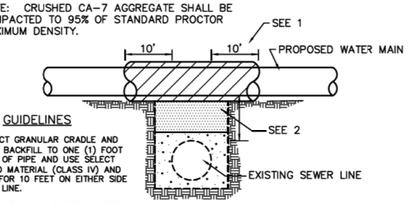

PROPOSED WATER MAIN BELOW EXISTING SEWER LINE WITH LESS THAN 18" MINIMUM SEPARATION.

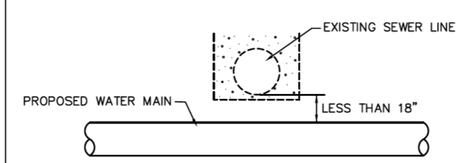

NOT ALLOWED*

MUST MAINTAIN 18" VERTICAL SEPARATION

WATER & SEWER SEPARATION REQUIREMENTS

Village of Sugar Grove	SCALE:	FOLDER:	DRAWING NUMBER:	DRAWN BY:
10 Municipal Drive Sugar Grove, Illinois 60554 Phone: (630) 466-4507	N.T.S.	SG-WA	06	CLN
	DATE: 5/18/07			REVISED:

COMPANY NAME:
PROJECT CONTACT:
CLIENT:
DATE PLOTTED: 10/14/2014 8:28:13 PM
FILE NAME: p9120113-sht-details-044-Water & Sewer Separation Requirements 1of2.dgn
PLOT DRIVER: pdf.pH
PEN TABLE: standard-trans.tbl

HRGreen.com
Illinois Professional Design Firm # 184-001322

USER NAME = dstancz	DESIGNED - JRM	REVISED -	
FILE NAME = p9120113-sht-details-044-Water & Sewer Separation Requirements 1of2.dgn	DRAWN -	REVISED -	
PLOT SCALE = N.T.S.	CHECKED - TH	REVISED -	
PLOT DATE = 10/14/2014	DATE - 10/14/14	REVISED -	

STATE OF ILLINOIS
DEPARTMENT OF TRANSPORTATION

VILLAGE OF SUGAR GROVE DETAILS

SCALE: N.T.S. | SHEET NO. 4 OF 5 SHEETS | STA. | TO STA.

F.A.P. RTE.	SECTION	COUNTY	TOTAL SHEETS	SHEET NO.
573	30-N(13)	KANE	219	144
		CONTRACT NO. 60X70		
FED. ROAD DIST. NO.	ILLINOIS	FED. AID PROJECT		

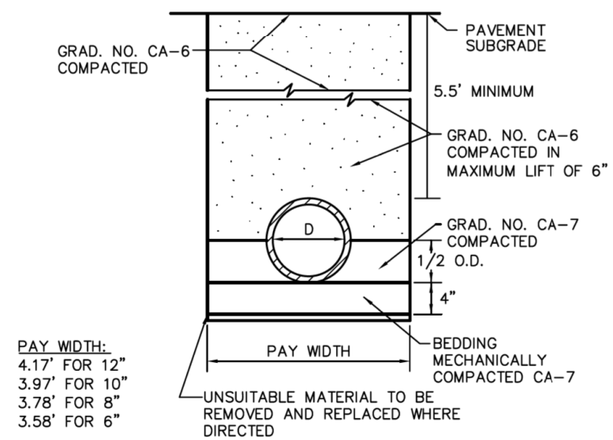

PAY WIDTH:
4.17' FOR 12"
3.97' FOR 10"
3.78' FOR 8"
3.58' FOR 6"

PAVED AREAS & DRIVEWAYS

TRENCH BACKFILL INSTALLATION LIMITS ARE DEFINED AS ALL LOCATIONS UNDER AND WITHIN 2 FEET OF ANY PAVED AREA. PAVED AREAS INCLUDE SHOULDERS, CURB AND GUTTER, SIDEWALK, PATHS, AND ANY AGGREGATE SURFACE COURSE.

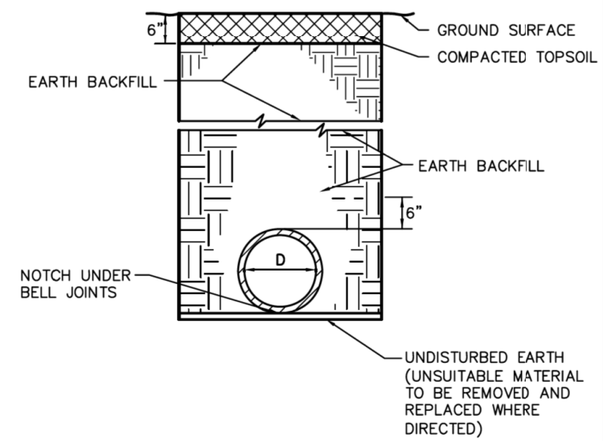

GRASSED AREAS

WATER MAIN TRENCH DETAIL

Village of Sugar Grove 10 Municipal Drive Sugar Grove, Illinois 60554 Phone: (630) 466-4507	SCALE: N.T.S. DATE: 5/18/07	FOLDER: SG-WA	DRAWING NUMBER: 07	DRAWN BY: CLN REVISED:

COMPANY NAME:
PROJECT CONTACT:
CLIENT:
DATE PLOTTED: 10/14/2014 8:28:12 PM
FILE NAME: p9120113-sht-details-046-Water Main Trench Details.dgn
PLOT DRIVER: pdf.pltr
PEN TABLE: standard-trans.tbl

HRGreen
HRGreen.com
Illinois Professional Design Firm
184-001322

USER NAME = dstancz	DESIGNED - JRM	REVISED -	
FILE NAME = p9120113-sht-details-046-Water Main Trench Details.dgn	DRAWN - DS	REVISED -	
PLOT SCALE = N.T.S.	CHECKED - TH	REVISED -	
PLOT DATE = 10/14/2014	DATE - 10/14/14	REVISED -	

STATE OF ILLINOIS
DEPARTMENT OF TRANSPORTATION

VILLAGE OF SUGAR GROVE DETAILS

SCALE: N.T.S. | SHEET NO. 5 OF 5 SHEETS | STA. | TO STA.

F.A.P. RTE.	SECTION	COUNTY	TOTAL SHEETS	SHEET NO.
573	30-N(13)	KANE	219	145
		CONTRACT NO. 60X70		

FED. ROAD DIST. NO. | ILLINOIS | FED. AID PROJECT

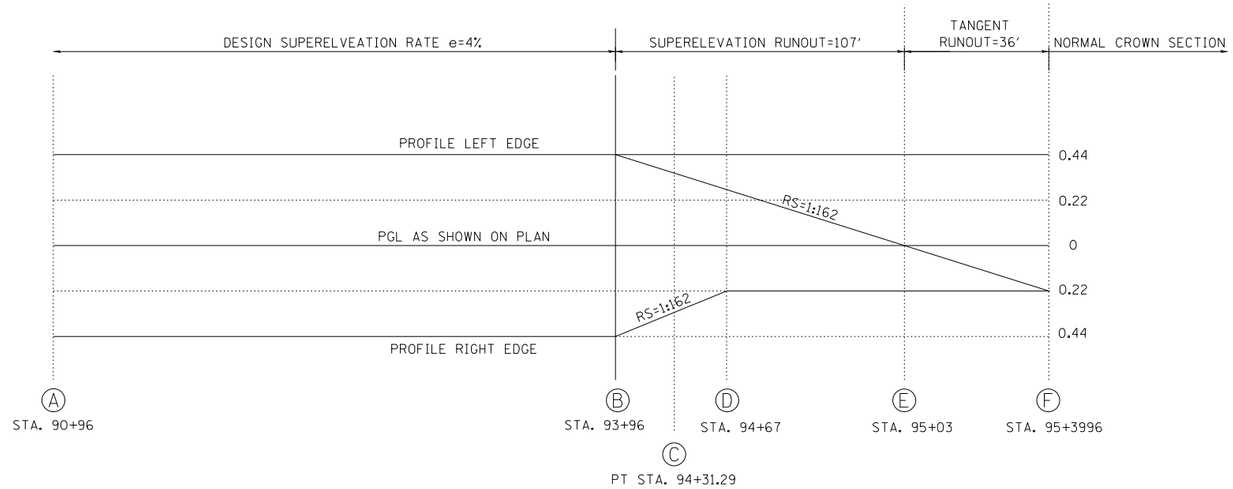

U.S. ROUTE 30 SUPERELEVATION DETAILS

AXIS OF ROTATION: ABOUT CENTERLINE

COMPANY NAME:
PROJECT CONTACT:
CLIENT:
DATE PLOTTED: 10/14/2014 8:29:45 PM
FILE NAME: p9120113-sht-details-001.dgn
PLOT DRIVER: pdf.pltˆ
PEN TABLE: standard-trans.tbl

HRGreen.com
Illinois Professional Design Firm # 184-001322

USER NAME = dstancz	DESIGNED - JRM	REVISED -	
FILE NAME = p9120113-sht-details-001.dgn	DRAWN - DS	REVISED -	
PLOT SCALE = 1'=50'	CHECKED - TH	REVISED -	
PLOT DATE = 10/14/2014	DATE - 10/14/14	REVISED -	

STATE OF ILLINOIS
DEPARTMENT OF TRANSPORTATION

SUPERELEVATION TABLE
US ROUTE 30

SCALE: 1"=50' | SHEET NO. 1 OF 2 SHEETS | STA. | TO STA.

F.A.P. RTE.	SECTION	COUNTY	TOTAL SHEETS	SHEET NO.
573	30-N(13)	KANE	219	146
		CONTRACT NO. 60X70		
FED. ROAD DIST. NO.	ILLINOIS	FED. AID PROJECT		

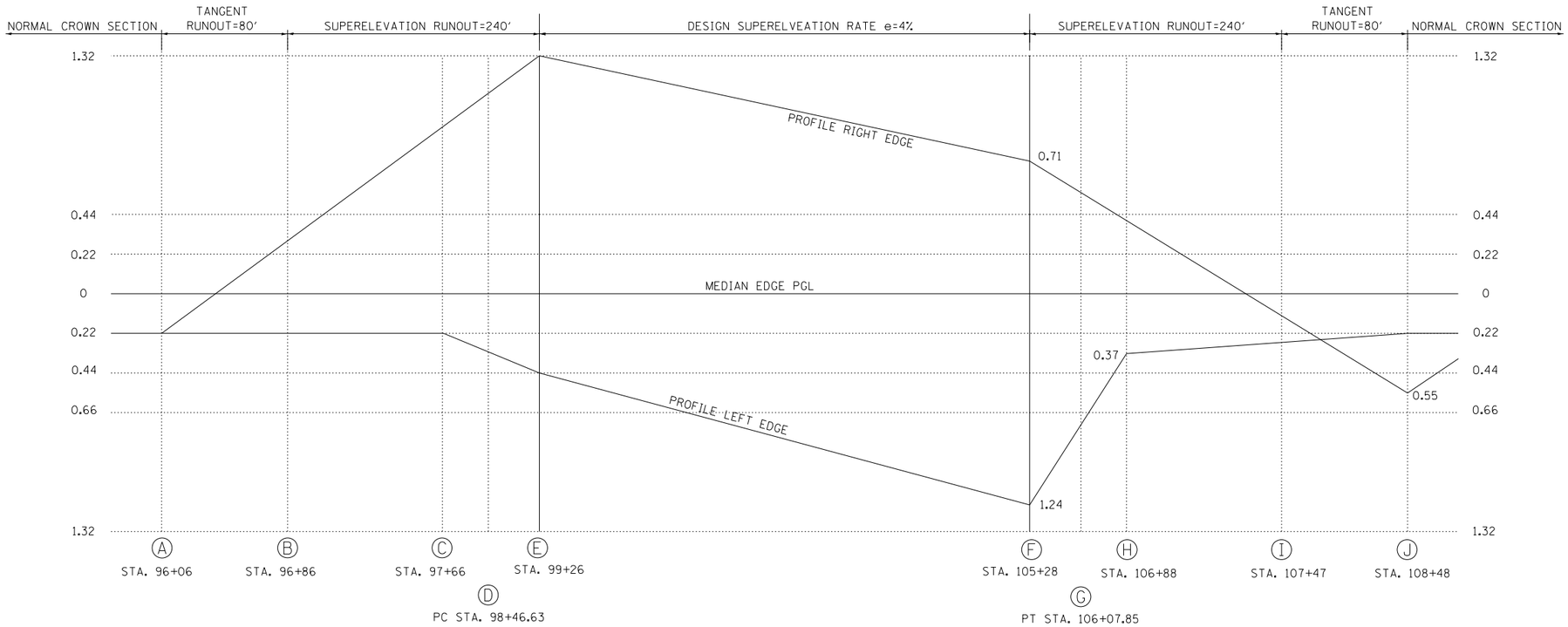

CURVE
US30-C2

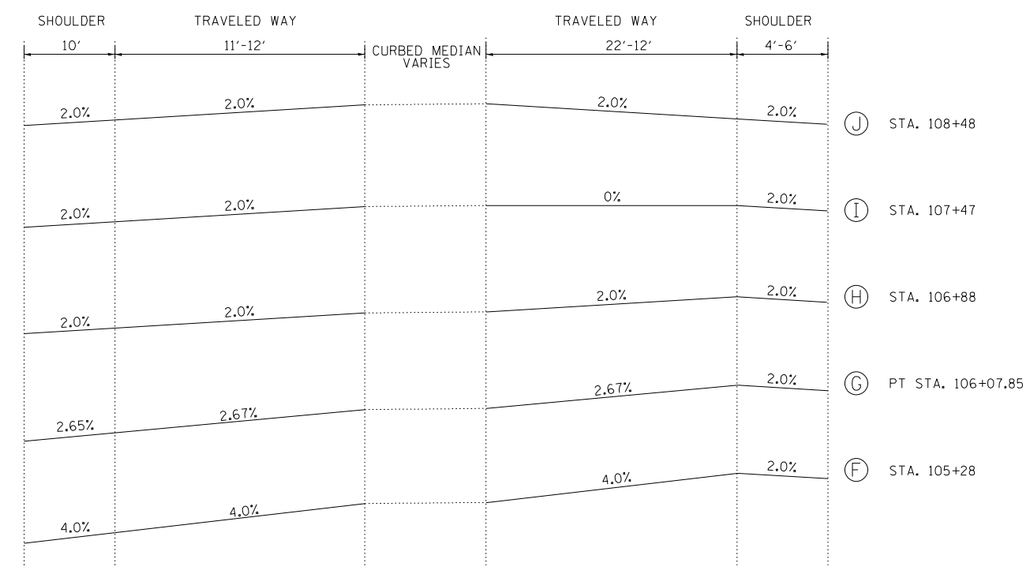

CURVE
US30-C2

U.S. ROUTE 30 SUPERELEVLATION DETAILS

AXIS OF ROTATION: ABOUT MEDIAN EDGE

COMPANY NAME:
PROJECT CONTACT:
CLIENT:
DATE PLOTTED: 10/14/2014 8:29:48 PM
FILE NAME: p9120113-sht-details-002.dgn
PLOT DRIVER: pdf.pltˆ
PEN TABLE: standard-trans.tbl

HRGreen.com
Illinois Professional Design Firm # 184-001322

USER NAME = dstancz	DESIGNED - JRM	REVISED -	STATE OF ILLINOIS DEPARTMENT OF TRANSPORTATION
FILE NAME = p9120113-sht-details-002.dgn	DRAWN - DS	REVISED -	
PLOT SCALE = 1'=50'	CHECKED - TH	REVISED -	
PLOT DATE = 10/14/2014	DATE - 10/14/14	REVISED -	

SUPERELEVATION TABLE
US ROUTE 30

SCALE: 1"=50' | SHEET NO. 2 OF 2 SHEETS | STA. | TO STA.

F.A.P. RTE.	SECTION	COUNTY	TOTAL SHEETS	SHEET NO.
573	30-N(13)	KANE	219	147
		CONTRACT NO. 60X70		

FED. ROAD DIST. NO. | ILLINOIS | FED. AID PROJECT

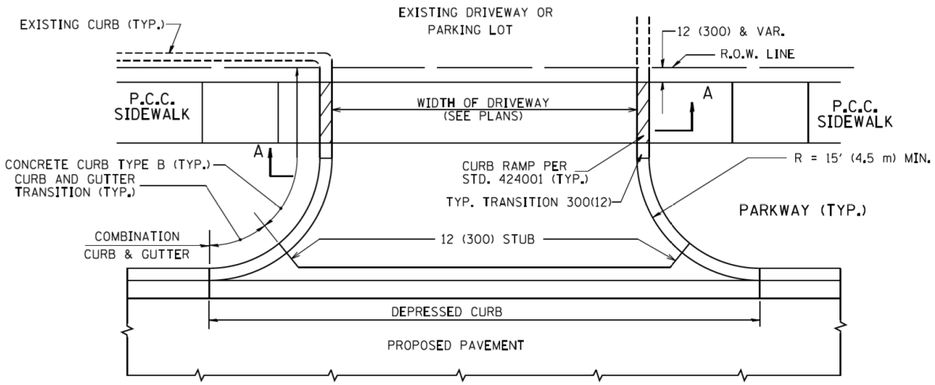

WITH CONCRETE CURB, TYPE B

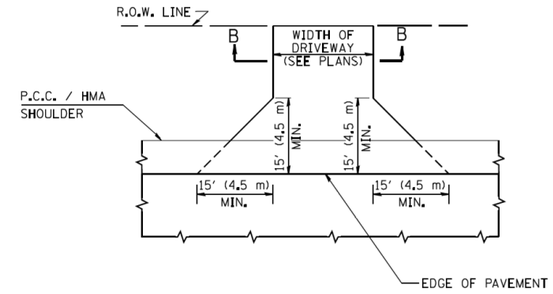

ADJACENT TO P.C.C. / HMA SHOULDER

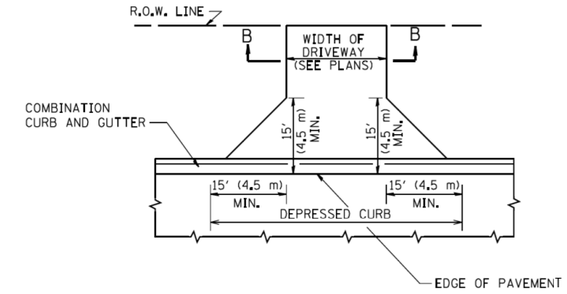

ADJACENT TO CURB AND GUTTER

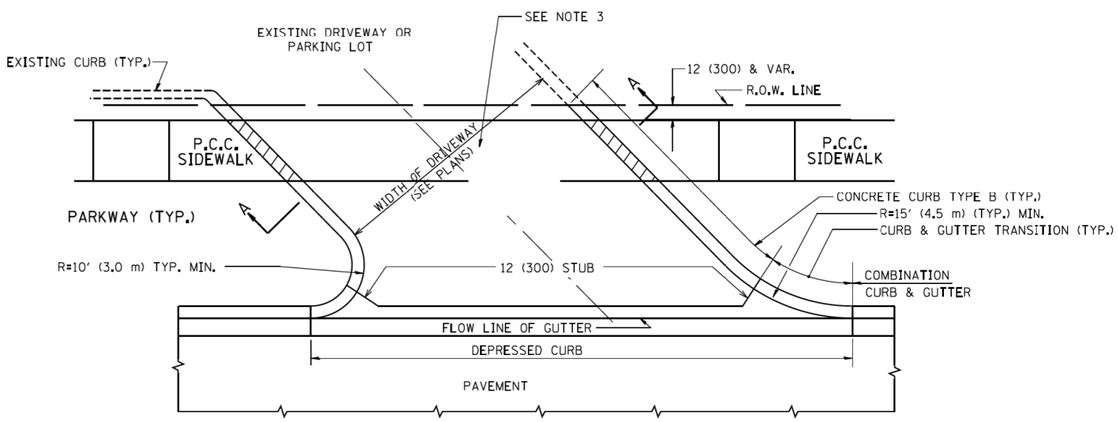

WITH CONCRETE CURB, TYPE B

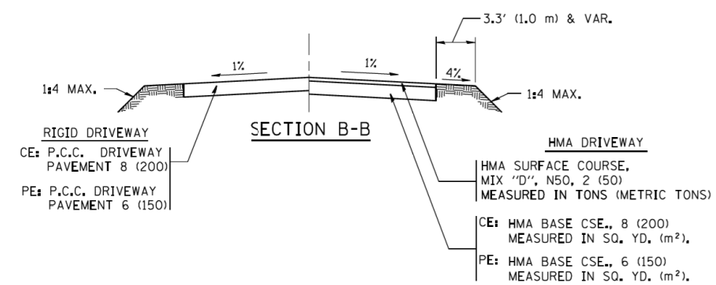

SECTION B-B

RURAL FIELD ENTRANCE (FE)

HMA SURFACE COURSE, MIX "D", N50, 2 (50) MEASURED IN TONS (METRIC TONS)

AGGREGATE BASE CSE., TYPE B, 8 (200) MEASURED IN SQ. YD. (m^2).

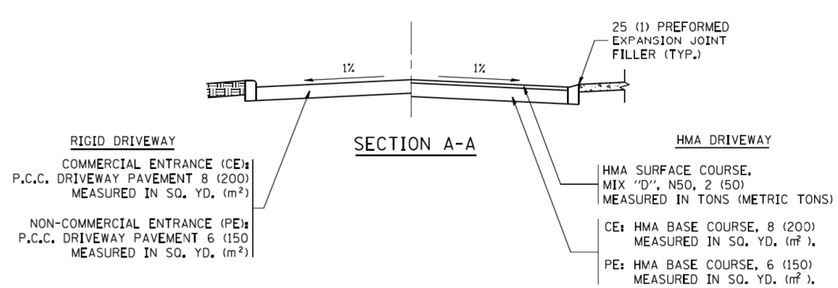

SECTION A-A

GENERAL NOTES:

DRIVEWAY SLOPES, LOCATIONS, & GEOMETRIC LAYOUT SHALL BE IN ACCORDANCE WITH THE LATEST EDITION OF THE "HANDBOOK FOR POLICY ON PERMITS FOR ACCESS DRIVEWAYS TO STATE HIGHWAYS". FOR FURTHER LAYOUT REQUIREMENTS, REFER TO ILLUSTRATIONS IN THE PERMIT HANDBOOK. DRIVEWAYS SHALL BE REPLACED IN KIND, UNLESS OTHERWISE NOTED ON THE PLANS.

COMMERCIAL DRIVEWAYS SHALL BE CONSTRUCTED WITH CONCRETE CURB, TYPE B RETURNS EXCEPT WHEN THE SIDEWALK EDGE IS 4 FEET (1.2 METERS) OR LESS FROM THE BACK OF CURB, CONSTRUCT A FLARE DRIVEWAY WITHOUT CURB.

THE RESIDENT ENGINEER SHALL CONTACT THE TRAFFIC PERMIT OFFICE AT 847/ 705-4131 FOR ANY QUESTIONS ON DRIVEWAYS SHOWN IN THE PLANS, SPECIFICALLY IN REFERENCE TO ADDITIONAL AND/OR RELOCATION/REMOVAL OF A DRIVEWAY.

COMBINATION CONCRETE CURB & GUTTER SHALL BE MEASURED STRAIGHT ACROSS THE DRIVEWAY. NO ADDITIONAL COMPENSATION WILL BE ALLOWED FOR THE CURB & GUTTER TRANSITION.

1 (25) PREFORMED EXPANSION JOINT FILLER WILL NOT BE PAID SEPARATELY, BUT SHALL BE CONSIDERED INCLUDED IN THE COST OF THE P.C.C. DRIVEWAY PAVEMENT OR P.C.C. SIDEWALK.

WHEN THE P.C.C. SIDEWALK EXTENDS THROUGH THE DRIVEWAY, THE THICKNESS OF THE SIDEWALK IN THE DRIVEWAY AREA SHALL BE THE SAME AS THE DRIVEWAY THICKNESS. SIDEWALK WILL BE PAID FOR AS P.C.C. SIDEWALK OF THE THICKNESS SPECIFIED. SIDEWALK CROSS SLOPE THRU DRIVEWAY AREA TO BE A MAXIMUM OF 1:50.

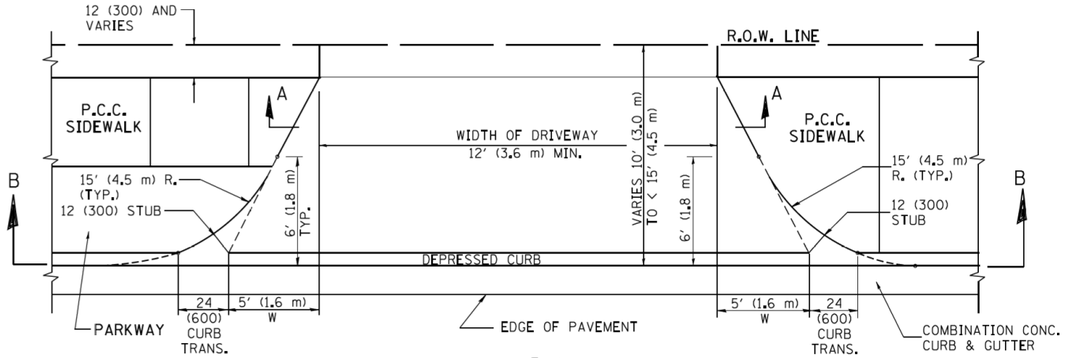

PLAN

10' (3.0 m) TO < 15' (4.5 m)

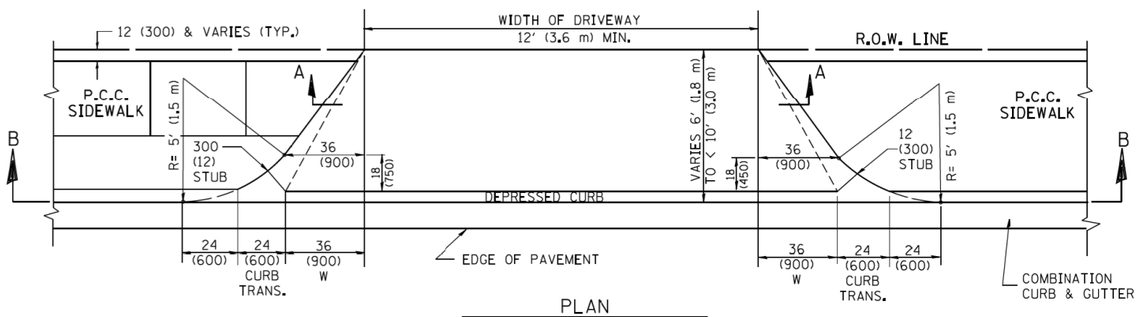

PLAN

6' (1.8 m) TO < 10' (3.0 m)

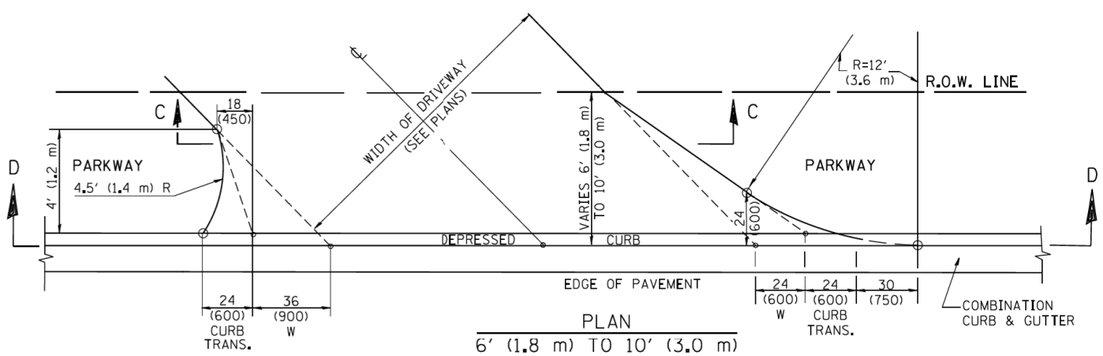

PLAN

6' (1.8 m) TO 10' (3.0 m)

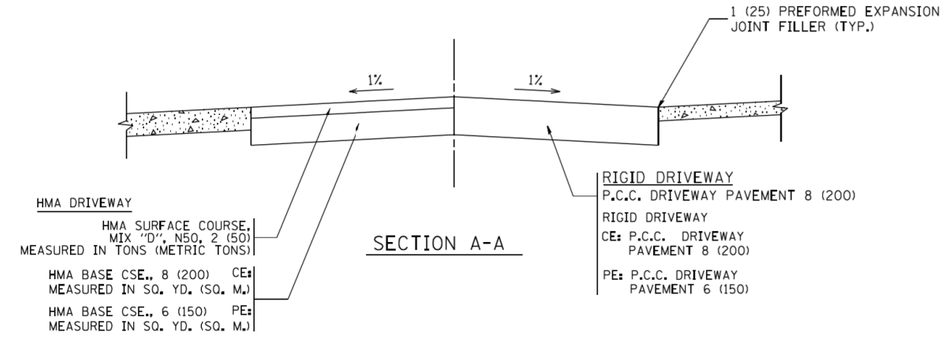

SECTION A-A

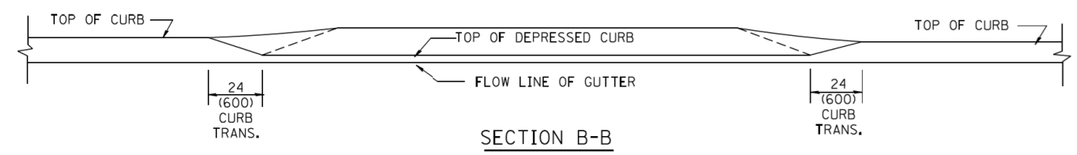

SECTION B-B

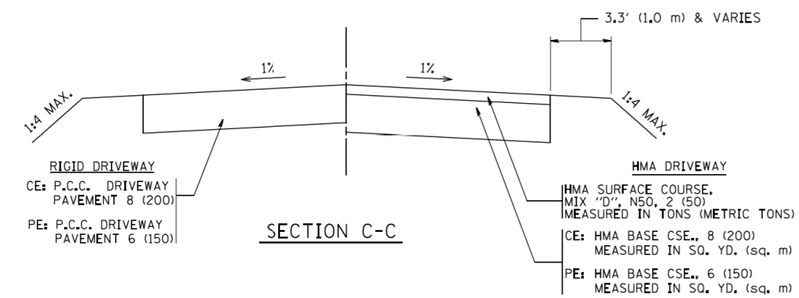

SECTION C-C

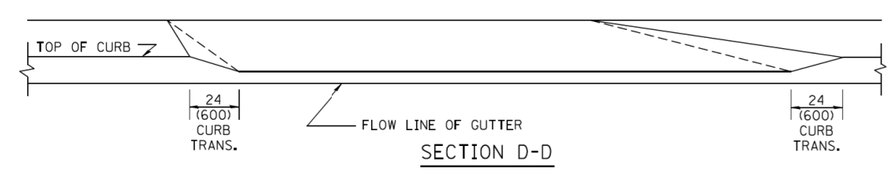

SECTION D-D

GENERAL NOTES

DRIVEWAY SLOPES, LOCATIONS, & GEOMETRIC LAYOUT SHALL BE IN ACCORDANCE WITH THE LATEST EDITION OF THE "HANDBOOK FOR POLICY ON PERMITS FOR ACCESS DRIVEWAYS TO STATE HIGHWAYS". FOR FURTHER LAYOUT REQUIREMENTS, REFER TO ILLUSTRATION 10 IN THE PERMIT HANDBOOK. WHERE SIDEWALKS EXIST, DRIVEWAYS SHALL BE REPLACED WITH RIGID PAVEMENT. WHERE NO SIDEWALKS EXIST, DRIVEWAYS SHALL BE REPLACED IN KIND. SIDEWALK CROSS SLOPE THRU DRIVEWAY AREA TO BE A MAXIMUM OF 1:50.

WHEN THE DISTANCE BETWEEN R.O.W. AND THE BACK OF CURB IS EQUAL TO OR LESS THAN 8' (2.4 m), THE P.C.C. SIDEWALK SHALL EXTEND TO THE BACK OF CURB.

THE RESIDENT ENGINEER SHALL CONTACT THE TRAFFIC PERMIT OFFICE AT 847/ 705-4131 FOR ANY QUESTIONS ON DRIVEWAYS SHOWN IN THE PLANS; SPECIFICALLY IN REFERENCE TO ADDITIONAL AND/OR RELOCATION/REMOVAL OF A DRIVEWAY.

COMBINATION CONCRETE CURB & GUTTER SHALL BE MEASURED STRAIGHT ACROSS THE DRIVEWAY. NO ADDITIONAL COMPENSATION WILL BE ALLOWED FOR THE CURB & GUTTER TRANSITION.

THE 1 (25) PREFORMED EXPANSION JOINT FILLER WILL NOT BE PAID SEPARATELY, BUT SHALL BE CONSIDERED INCLUDED IN THE COST OF THE P.C.C. DRIVEWAY PAVEMENT OR P.C.C. SIDEWALK.

"W" VARIES FROM 36 (900) TO 5' (1.5 m) PROPORTIONAL TO THE LENGTH (L), FROM 6' (1.8 m) TO 10' (3 m).

ALL DIMENSIONS ARE IN INCHES (MILLIMETERS) UNLESS OTHERWISE NOTED.

COMPANY NAME:
PROJECT CONTACT:
CLIENT:
DATE PLOTTED: 10/14/2014 8:31:06 PM
FILE NAME: p312013-sht-details-005-BD02.dgn
PLOT DRIVER: pdf.pltr
PEN TABLE: standard-trans.tbl

FILE NAME = c:\pw_work\pwidot\leysa\d0108315\bd02.dgn	USER NAME = leysa	DESIGNED - R. SHAH	REVISED - M. GOMEZ 04-06-01
		DRAWN -	REVISED - P. LaFLEUR 04-15-03
	PLOT SCALE = 50.0000 ' / in.	CHECKED -	REVISED - R. BORO 01-01-07
	PLOT DATE = 10/28/2011	DATE - 11-06-95	REVISED - R. BORO 09-06-11

STATE OF ILLINOIS
DEPARTMENT OF TRANSPORTATION

DRIVEWAY DETAILS
DISTANCE BETWEEN ROW AND FACE OF CURB < 15' (4.5 m)

SCALE: N.T.S. | SHEET NO. OF SHEETS | STA. TO STA.

F.A.P. RTE.	SECTION	COUNTY	TOTAL SHEETS	SHEET NO.
573	30-N(13)	KANE	219	149
BD400-02 (BD-02)		CONTRACT NO. 60X70		
FED. ROAD DIST. NO.	ILLINOIS	FED. AID PROJECT		

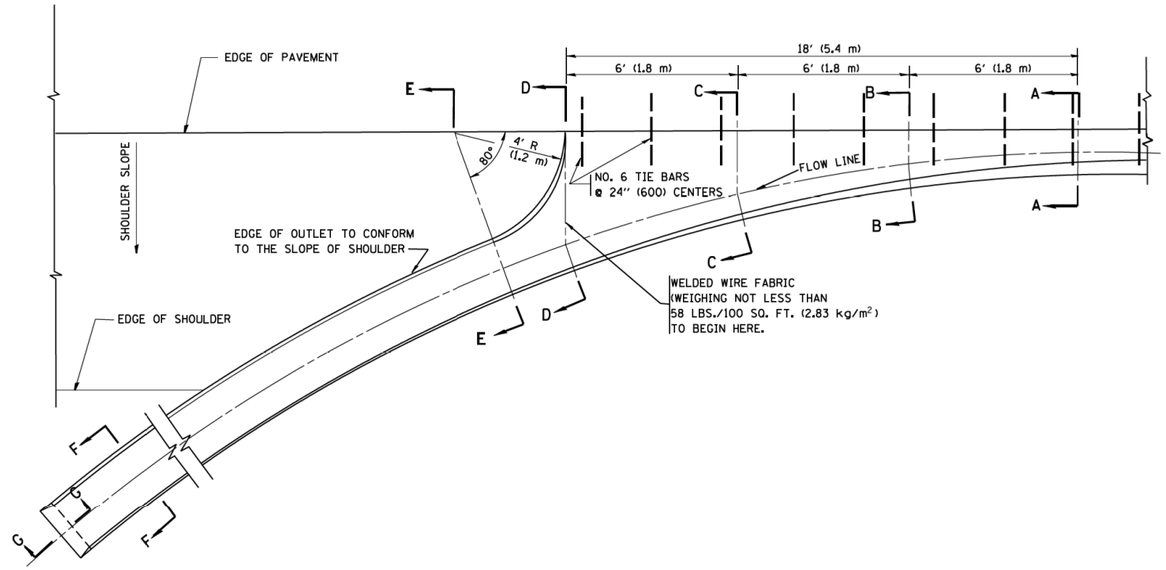

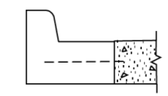

A-A *

* DIMENSIONS OF THE CURB & GUTTER AT SECTION A-A ARE SHOWN ON STATE STANDARD 606001.
FOR DETAILS OF OUTLET FOR CONCRETE CURB & GUTTER, TYPE B-6.24 (B-15.60) SEE STATE STANDARD 606006.

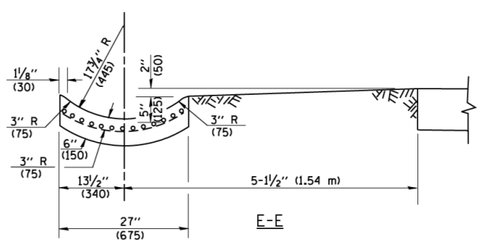

E-E

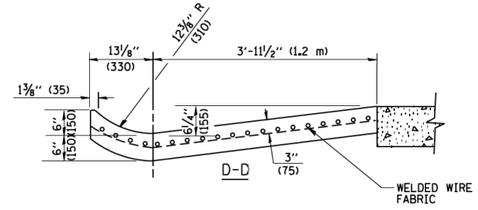

D-D

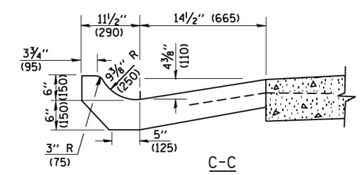

C-C

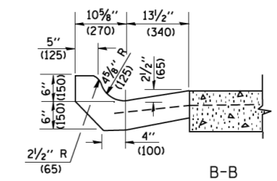

B-B

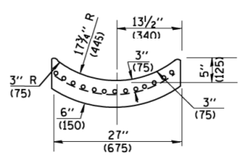

F-F

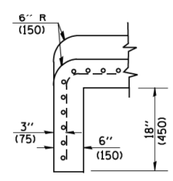

G-G

GENERAL NOTES

GUTTER OUTLET SHALL BE TIED TO THE PAVEMENT IN ACCORDANCE WITH DETAILS FOR LONGITUDINAL CONSTRUCTION JOINT SHOWN ON STANDARD 420001.

TIE BARS SHALL BE NO. 20 (NO.6) AT 24" (600) CENTERS UNLESS OTHERWISE SHOWN.

IF THE AVERAGE GRADE OF PAVEMENT FOR THE DISTANCE FROM SECTION A-A TO D-D EXCEEDS 2%, THIS DISTANCE SHALL BE INCREASED 6' (1.8 m) FOR EACH 1% INCREASE IN GRADE.

QUANTITIES

FOR SECTION A-A TO E-E AND CURTAIN WALL=
1.25 CU. YDS. (0.96 m^3) CLASS SI CONCRETE (OUTLET) FOR 9" (225) PAV'T.
1.27 CU. YDS. (0.96 m^3) CLASS SI CONCRETE (OUTLET) FOR 10" (250) PAV'T.
FOR SECTION F-F=
0.045 CU. YDS. (0.03 m^3) CLASS SI CONCRETE PER ft. (m).

ALL DIMENSIONS ARE IN INCHES (MILLIMETERS) UNLESS OTHERWISE SHOWN.

COMPANY NAME:
PROJECT CONTACT:
CLIENT:
DATE PLOTTED: 10/14/2014 8:32:25 PM
FILE NAME: p9120113-sht-details-006-B003.dgn
PLOT DRIVER: pdf.plt
PEN TABLE: standard-trans.tbl

FILE NAME = W:\diststd\22x34\bd03.dgn	USER NAME = geglianobt	DESIGNED - M. DE YONG	REVISED - R. SHAH 09-09-94	STATE OF ILLINOIS DEPARTMENT OF TRANSPORTATION	OUTLET FOR CONCRETE CURB AND GUTER	F.A.P. RTE.	SECTION	COUNTY	TOTAL SHEETS	SHEET NO.
		DRAWN -	REVISED - R. SHAH 10-25-94			573	30-N(13)	KANE	219	150
	PLOT SCALE = 50.0000 ' / IN.	CHECKED -	REVISED - E. GOMEZ 12-21-00			BD600-01	(BD-03)	CONTRACT NO. 60X70		
	PLOT DATE = 1/4/2008	DATE - 08-04-86	REVISED -		SCALE: N.T.S. SHEET NO. OF SHEETS STA. TO STA.	FED. ROAD DIST. NO.	ILLINOIS	FED. AID PROJECT		

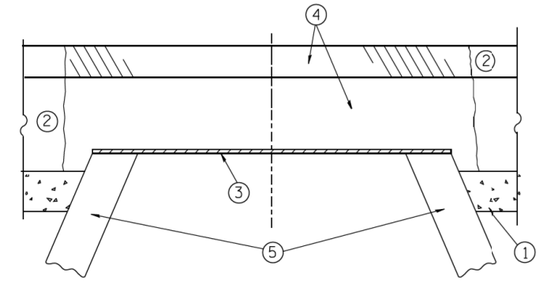

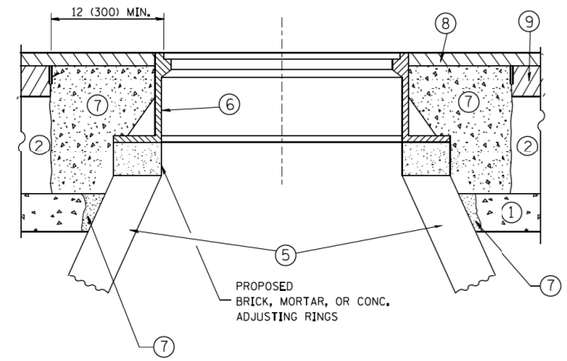

CONSTRUCTION PROCEDURES

STAGE 1 (BEFORE PAVEMENT MILLING)

A) REMOVE A MINIMUM OF 12 (300) OF THE PAVEMENT FROM AROUND THE STRUCTURE.
B) REMOVE THE EXISTING FRAME AND LID FROM THE STRUCTURE.
C) COVER THE STRUCTURE OPENING WITH A 36 (900) DIAMETER METAL PLATE.
D) BACKFILL WITH CRUSHED STONE AND A MINIMUM 1½ (40) THICK HMA SURFACE MIX APPROVED BY THE ENGINEER.

STAGE 2 (AFTER PAVEMENT MILLING)

A) REMOVE THE HMA SURFACE MIX AND CRUSHED STONE.
B) INSTALL THE FRAME AND LID; ADJUST THE FRAME TO ITS FINAL SURFACE ELEVATION.
C) THE SURROUNDING SPACE SHALL BE FILLED WITH CLASS PP-1* CONCRETE TO THE ELEVATION OF THE SURFACE OF THE EXISTING BASE COURSE OR THE BINDER COURSE.

* UNLESS OTHERWISE SPECIFIED IN THE PLANS.

THE PROCEDURE EXPLAINED ABOVE SHALL CONFORM TO THE APPLICABLE PORTIONS OF SECTIONS 353, 406, 602, AND 603 OF THE STANDARD SPECIFICATIONS EXCEPT THAT "THE CONTRACTOR SHALL ADJUST THE STRUCTURES TO THE FINISHED PAVEMENT ELEVATION NO MORE THAN 5 CALENDAR DAYS PRIOR TO PLACEMENT OF THE FINAL LIFT OF SURFACE UNLESS APPROVED BY THE ENGINEER."

LEGEND

1. SUB-BASE GRANULAR MATERIAL
2. EXISTING PAVEMENT
3. 36 (900) DIAMETER METAL PLATE
4. PROPOSED CRUSHED STONE AND HMA SURFACE MIX
5. EXISTING STRUCTURE
6. FRAME AND LID (SEE NOTES)
7. CLASS PP-1* CONCRETE
8. PROPOSED HMA SURFACE COURSE
9. PROPOSED HMA BINDER COURSE

NOTES:

EXISTING BROKEN FRAMES AND LIDS SHALL BE REMOVED AND DISPOSED OF BY THE CONTRACTOR AND SHALL BE REPLACED AS DIRECTED BY THE ENGINEER. REPLACEMENT FRAMES AND LIDS WILL BE PAID FOR IN ACCORDANCE WITH ARTICLE 109.04 OF THE STANDARD SPECIFICATIONS UNLESS A SEPARATE PAY ITEM HAS BEEN PROVIDED.

IF THE EXISTING LIDS ARE OPEN, THE FRAME WILL BE ADJUSTED TO THE ELEVATION OF THE MILLED PAVEMENT SURFACE PRIOR TO THE MILLING OPERATION. THE FRAME WILL NOT BE REMOVED AND COVERED BY THE METAL PLATE.

CITY OF CHICAGO CASTINGS ARE THE PROPERTY OF THE CITY AND THE CONTRACTOR SHALL NOTIFY THE CITY FOR REMOVAL AND DISPOSITION OF THE CASTINGS.

THE METAL PLATE USED TO COVER THE STRUCTURE SHALL REMAIN THE PROPERTY OF THE CONTRACTOR.

WHEN STRUCTURES ARE TO BE ADJUSTED OR RECONSTRUCTED, THE LOWERING AND RAISING OF THE FRAMES AND LIDS WILL NOT BE PAID FOR SEPARATELY BUT WILL BE INCLUDED IN THE COST OF THE CORRESPONDING PAY ITEM.

LOCATION OF STRUCTURES:

THE CONTRACTOR WILL BE REQUIRED TO KEEP A RECORD OF THE LOCATIONS OF THE BURIED STRUCTURES ACCORDING TO THE STATION AND DISTANCE LEFT OR RIGHT OF THE CENTERLINE OF PAVEMENT. UPON COMPLETION OF THE WORK, THE CONTRACTOR WILL DELIVER THE RECORD TO THE ENGINEER.

BASIS OF PAYMENT:

REMOVING FRAMES AND LIDS ON DRAINAGE AND UTILITY STRUCTURES IN THE PAVEMENT PRIOR TO MILLING, AND ADJUSTING TO FINAL GRADE PRIOR TO PLACING THE SURFACE COURSE, WILL BE PAID FOR AT THE CONTRACT UNIT PRICE EACH FOR "FRAMES AND LIDS TO BE ADJUSTED (SPECIAL)."

THIS WORK WILL NOT BE PAID FOR WHEN DRAINAGE AND UTILITY STRUCTURES ARE SPECIFIED FOR PAYMENT AS STRUCTURE RECONSTRUCTION.

NEW FRAMES AND LIDS, WHEN SPECIFIED, WILL BE PAID FOR SEPARATELY.

DETAILS FOR FRAMES AND LIDS ADJUSTMENT WITH MILLING

ALL DIMENSIONS ARE IN INCHES (MILLIMETERS) UNLESS OTHERWISE SHOWN

COMPANY NAME:
PROJECT CONTACT:
CLIENT:
DATE PLOTTED: 10/14/2014 8:13:27 PM
FILE NAME: p912013-sht-details-008-B008.dgn
PLOT DRIVER: pdf.pt4
PEN TABLE: standard-trans.tbl

FILE NAME = c:\pw_work\pwidot\bauerdl\d0108315\bd08.dgn	USER NAME = bauerdl	DESIGNED - R. SHAH	REVISED - R. WIEDEMAN 05-14-04
		DRAWN -	REVISED - R. BORO 01-01-07
	PLOT SCALE = 1968.5000 ' / m	CHECKED -	REVISED - R. BORO 03-09-11
	PLOT DATE = 12/6/2011	DATE - 10-25-94	REVISED - R. BORO 12-06-11

STATE OF ILLINOIS
DEPARTMENT OF TRANSPORTATION

DETAILS FOR
FRAMES AND LIDS ADJUSTMENT WITH MILLING

SCALE: N.T.S. | SHEET NO. OF SHEETS | STA. TO STA.

F.A.P. RTE.	SECTION	COUNTY	TOTAL SHEETS	SHEET NO.
573	30-N(13)	KANE	219	151

BD600-03 (BD-8) CONTRACT NO. 60X70

FED. ROAD DIST. NO. | ILLINOIS | FED. AID PROJECT

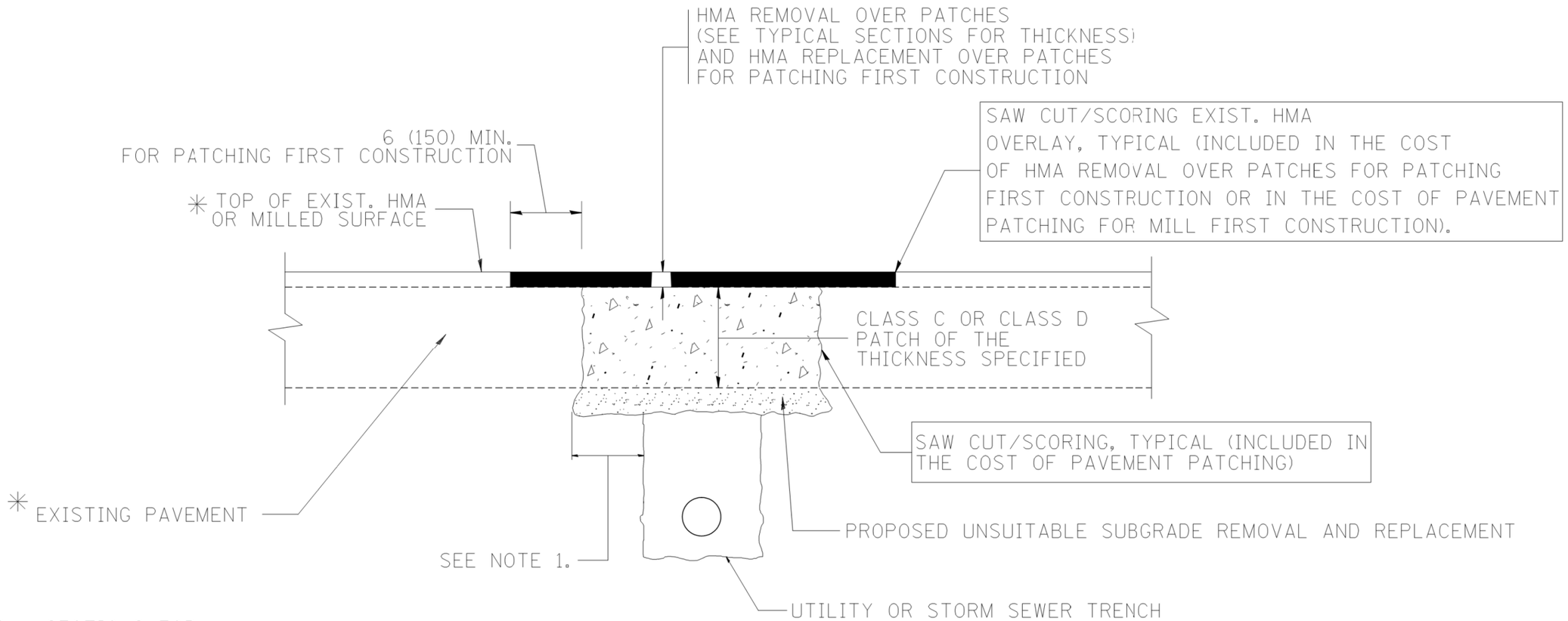

✳ SEE TYPICAL SECTIONS FOR THICKNESS AND MATERIALS

NOTES:

1. THE WIDTH OF THE FULL DEPTH PATCH OVER A TRENCH SHALL BE 12 (300) WIDER ON EACH SIDE OF THE TRENCH.
2. FOR METHOD OF MEASUREMENT AND BASIS OF PAYMENT, SEE RECURRING SPECIAL PROVISION "PATCHING WITH HOT-MIX ASPHALT OVERLAY REMOVAL".

SEQUENCE OF CONSTRUCTION (PATCHING FIRST)

1. REMOVE THE EXISTING HMA MATERIAL OVER THE AREA TO BE PATCHED.
2. REMOVE AND REPLACE WITH CLASS C OR D PATCH.
3. REPLACE HMA MATERIAL OVER THE AREA TO BE PATCHED.

SEQUENCE OF CONSTRUCTION (MILLING FIRST)

1. MILL HMA FIRST IF THERE IS AT LEAST 4½ INCHES OR MORE OF HMA MATERIAL ON TOP OF THE EXISTING PAVEMENT OR IF THE PAVEMENT IS FULL DEPTH HMA. A MINIMUM OF 2 INCHES OF HMA MATERIAL SHALL BE IN PLACE AFTER MILLING.
2. REMOVE AND REPLACE WITH FULL DEPTH CLASS D PATCHES TO TOP OF MILLED SURFACE.

ALL DIMENSIONS ARE IN INCHES (MILLIMETERS) UNLESS OTHERWISE SHOWN.

COMPANY NAME:
PROJECT CONTACT:
CLIENT:
DATE PLOTTED: 10/14/2014 8:34:40 PM
FILE NAME: P91/2013-sht-details-009-BD22.dgn
PLOT DRIVER: pdf.pltt
PEN TABLE: standard-trans.tbl

FILE NAME = c:\projects\diststd22x34\bd22.dgn	USER NAME = bauerdl	DESIGNED - R. SHAH	REVISED - A. ABBAS 04-27-98	STATE OF ILLINOIS DEPARTMENT OF TRANSPORTATION	PAVEMENT PATCHING FOR HMA SURFACED PAVEMENT	F.A. RTE.	SECTION	COUNTY	TOTAL SHEETS	SHEET NO.
		DRAWN -	REVISED - R. BORO 01-01-07			573	30-N(13)	KANE	219	152
	PLOT SCALE = 50.000 ' / IN.	CHECKED -	REVISED - R. BORO 09-04-07			BD400-04 (BD-22)		CONTRACT NO. 60X70		
	PLOT DATE = 10/27/2008	DATE - 10-25-94	REVISED - K. ENG 10-27-08		SCALE: NONE / SHEET NO. 1 OF 1 SHEETS / STA. / TO STA.	FED. ROAD DIST. NO. 1	ILLINOIS	FED. AID PROJECT		

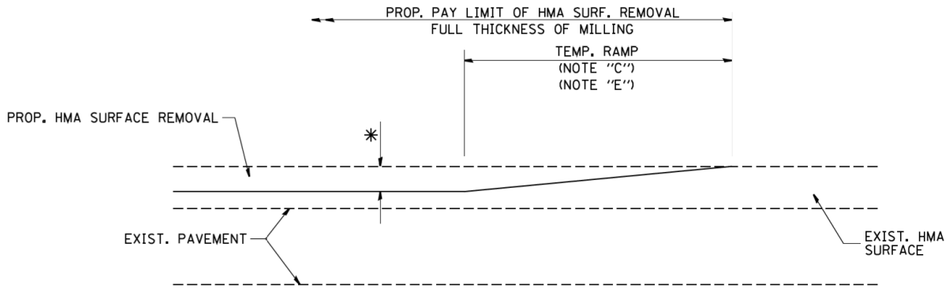

MILLED TEMPORARY RAMP

(FOR BUTT JOINT AND HMA TAPER SEE DETAIL BELOW)

OPTION 1

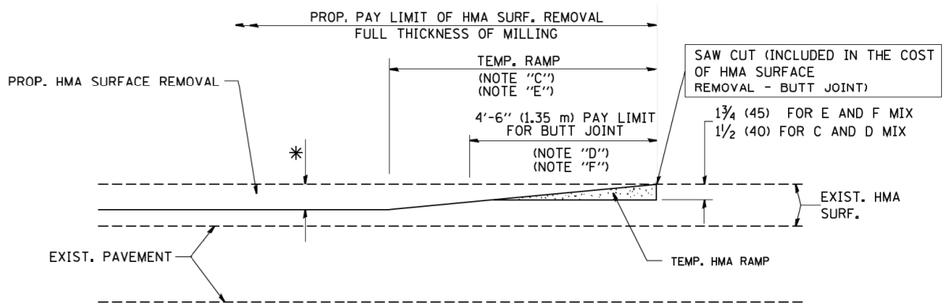

HMA CONSTRUCTED TEMPORARY RAMP

(FOR BUTT JOINT AND HMA TAPER SEE DETAIL BELOW)

OPTION 2

TYPICAL TEMPORARY RAMP

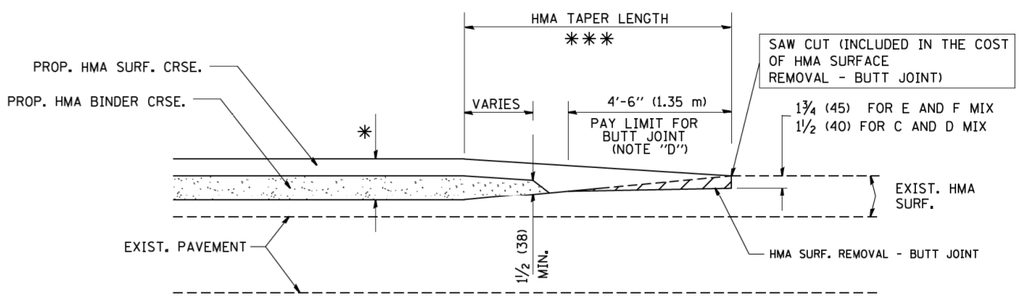

BUTT JOINT AND HMA TAPER

TYPICAL BUTT JOINT AND HMA TAPER FOR MILLING AND RESURFACING

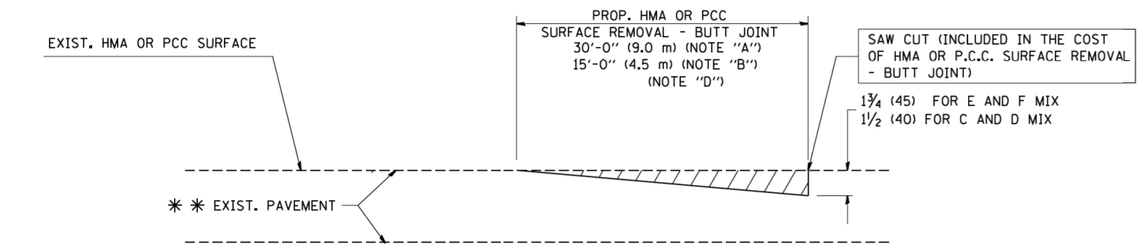

BUTT JOINT DETAIL

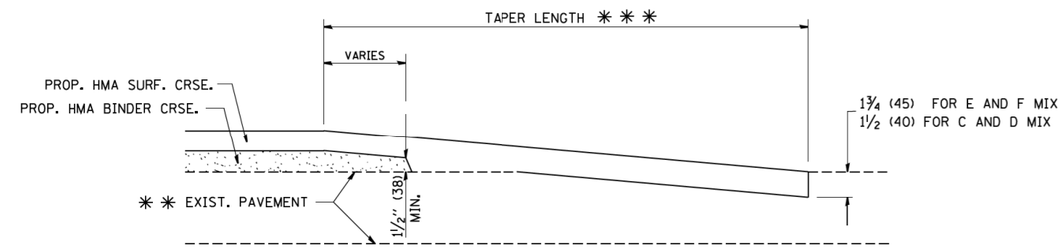

HMA TAPER DETAIL

TYPICAL BUTT JOINT AND HMA TAPER FOR RESURFACING ONLY

✳✳ PC CONCRETE, HMA OR HMA RESURFACED PAVEMENT.

NOTES

A: MAINLINE ROADWAYS AND MAJOR SIDE ROADS.

B: MINOR SIDE ROADS.

C: THE TEMP. RAMP SHALL BE CONSTRUCTED IMMEDIATELY UPON REMOVAL OF THE EXISTING HMA SURFACE.

D: THE BUTT JOINT SHALL BE CONSTRUCTED IMMEDIATELY PRIOR TO PLACING THE PROPOSED HMA COURSES.

E: TAPER THE TEMP. RAMP AT A RATE OF 3'-0" (900 mm) PER 1 INCH (25 mm) OF MILLING THICKNESS.

F: INSTALLATION AND REMOVAL OF THE 4'-6" (1.35 m) TEMP. RAMP IS INCLUDED IN COST OF HMA SURFACE REMOVAL - BUTT JOINT

G: SEE ARTICLE 406.08 AND 406.14 OF THE STANDARD SPECIFICATIONS FOR "HMA AND/OR PCC SURFACE REMOVAL, BUTT JOINT".

✳ SEE TYPICAL SECTIONS FOR MILLING THICKNESS.

✳✳✳ 20'-0" (6.1 m) PER 1 (25) RESURFACING (NOTE "A")
10'-0" (3.0 m) PER 1 (25) RESURFACING (NOTE "B")

BASIS OF PAYMENT:

THE BUTT JOINT WILL BE PAID FOR AT THE CONTRACT UNIT PRICE PER SQUARE YARD (SQUARE METER) FOR "HOT-MIX ASPHALT SURFACE REMOVAL - BUTT JOINT" OR FOR "PORTLAND CEMENT CONCRETE SURFACE REMOVAL- BUTT JOINT".

ALL DIMENSIONS ARE IN INCHES (MILLIMETERS) UNLESS OTHERWISE SHOWN.

COMPANY NAME:
PROJECT CONTACT:
CLIENT:
DATE PLOTTED: 10/14/2014 8:35:03 PM
FILE NAME: p91201l3-sht-details-009-BD32.dgn
PLOT DRIVER: pdf.pH
PEN TABLE: standard-trans.tbl

FILE NAME = W:\diststd\22x34\bd32.dgn	USER NAME = gaglianobt	DESIGNED - M. DE YONG	REVISED - R. SHAH 10-25-94	STATE OF ILLINOIS DEPARTMENT OF TRANSPORTATION	BUTT JOINT AND HMA TAPER DETAILS	F.A.P. RTE.	SECTION	COUNTY	TOTAL SHEETS	SHEET NO.
		DRAWN -	REVISED - A. ABBAS 03-21-97			573	30-N(13)	KANE	219	153
	PLOT SCALE = 50.0000 ' / IN.	CHECKED -	REVISED - M. GOMEZ 04-06-01			BD400-05 BD32		CONTRACT NO. 60X70		
	PLOT DATE = 1/4/2008	DATE - 06-13-90	REVISED - R. BORO 01-01-07		SCALE: N.T.S. SHEET NO. OF SHEETS STA. TO STA.	FED. ROAD DIST. NO.	ILLINOIS	FED. AID PROJECT		

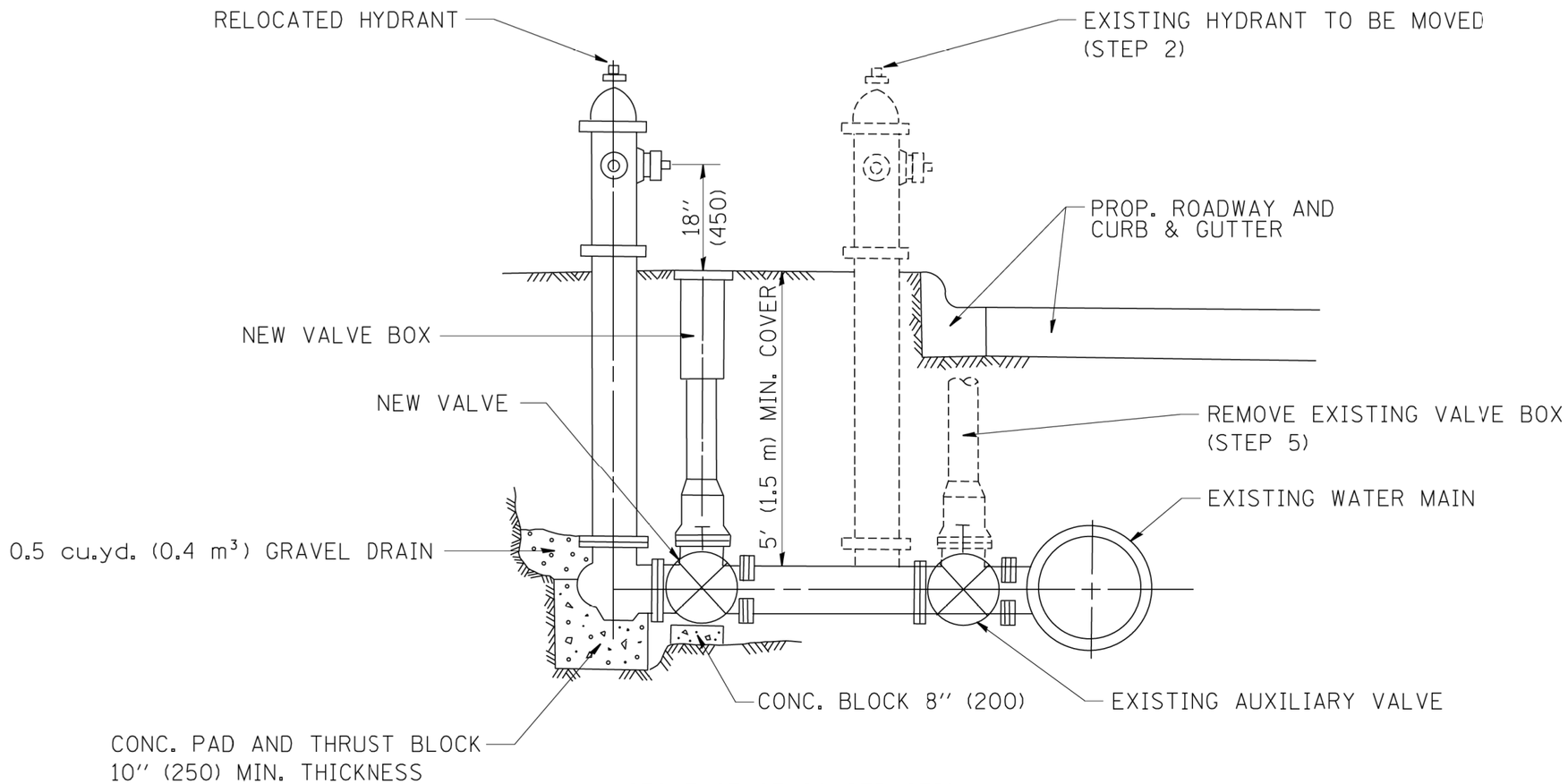

SEQUENCE OF CONSTRUCTION:

1. CLOSE EXISTING VALVE.
2. REMOVE EXISTING HYDRANT.
3. INSTALL HYDRANT EXTENSION AND NEW VALVE.
4. RELOCATE EXISTING HYDRANT.
5. OPEN EXISTING VALVE, REMOVE BOX.
6. BACKFILL.
7. FLUSH AND TEST FOR CHLORIDE RESIDUAL AND PROVIDE TEST.

ALL WORK TO BE DONE IN ACCORDANCE WITH ARTICLE 564 OF THE STANDARD SPECIFICATIONS. NEW VALVE AND BOX SHALL BE SAME MAKE AND MODEL AS EXISTING.

FIRE HYDRANT TO BE MOVED

ALL DIMENSIONS ARE IN INCHES (MILLIMETERS) UNLESS OTHERWISE SHOWN.

COMPANY NAME:
PROJECT CONTACT:
CLIENT:
DATE PLOTTED: 10/14/2014 8:36:10 PM
FILE NAME: p912013-sn1-details-011-BD36.dgn
PLOT DRIVER: pdf.plt
PEN TABLE: standard-trans.tbl

FILE NAME = Wi\diststd\22x34\bd36.dgn	USER NAME = gaglianobt	DESIGNED -	REVISED - R. SHAH 09-09-94	STATE OF ILLINOIS DEPARTMENT OF TRANSPORTATION
		DRAWN -	REVISED - R. SHAH 10-25-94	
	PLOT SCALE = 50.0000 ' / IN.	CHECKED -	REVISED -	
	PLOT DATE = 1/4/2008	DATE -	REVISED -	

FIRE HYDRANT TO BE MOVED

SCALE: N.T.S. | SHEET NO. OF SHEETS | STA. TO STA.

F.A.P. RTE.	SECTION	COUNTY	TOTAL SHEETS	SHEET NO.
573	30-N(13)	KANE	219	154
	BD-36	CONTRACT NO. 60X70		
FED. ROAD DIST. NO.	ILLINOIS	FED. AID PROJECT		

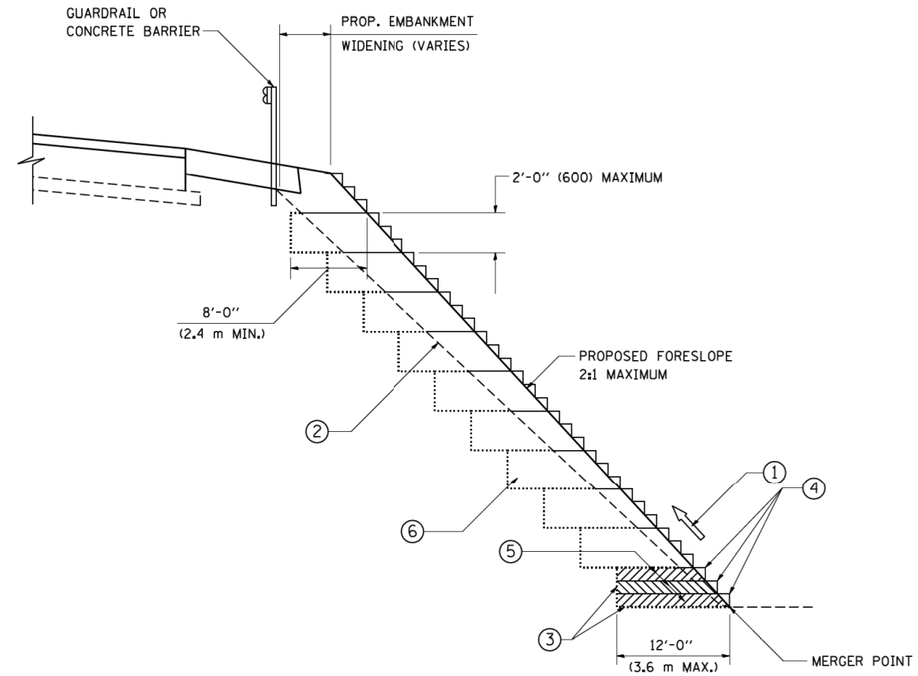

TYPICAL BENCHING DETAIL FOR EMBANKMENT

NOTES:

1. CONSTRUCT SUCCEEDING BENCH CUTS AND EMBANKMENT PLACEMENT AND COMPACTION FROM BOTTOM TO TOP IN STAIRSTEP FASHION.
2. EXISTING FORESLOPE PREPARED IN ACCORDANCE WITH ARTICLE 205.03 OF THE STANDARD SPECIFICATIONS.
3. BENCH CUT EXISTING SLOPE TYPICAL FOR EACH STEP.
4. TRIM TO FINAL SLOPE.
5. EQUAL 8-INCH (200) LIFTS OF EMBANKMENT COMPACTED IN ACCORDANCE WITH ARTICLE 205.05 OF THE STANDARD SPECIFICATIONS.
6. EXCAVATION OF BENCH CUTS WITHIN EXISTING EMBANKMENT WILL BE PAID FOR AT THE CONTRACT UNIT PRICE PER CUBIC METER OR CUBIC YARD FOR "EARTH EXCAVATION". THIS PRICE WILL INCLUDE ALL LABOR AND MATERIAL, NO ADDITIONAL COMPENSATION WILL BE ALLOWED.
7. SLOPES SHALL BE BENCHED ACCORDING TO THIS DETAIL WHEN THE SLOPE IS STEEPER THAN 4:1 AND THE HEIGHT IS GREATER THAN 5' (1.5 m).

ALL DIMENSIONS ARE IN INCHES (MILLIMETERS) UNLESS OTHERWISE SHOWN.

COMPANY NAME:
PROJECT CONTACT:
CLIENT:
DATE PLOTTED: 10/14/2014 8:36:53 PM
FILE NAME: p912013-sht-details-013-BD51.dgn
PLOT DRIVER: pdf.pltˆ
PEN TABLE: standard-trans.tbl

FILE NAME = W:\diststd\22x34\bd51.dgn	USER NAME = gaglianobt	DESIGNED -	REVISED -	STATE OF ILLINOIS DEPARTMENT OF TRANSPORTATION	BENCHING DETAIL FOR EMBANKMENT WIDENING
		DRAWN - CADD	REVISED -		
	PLOT SCALE = 50.0000 '/ IN.	CHECKED - S.E.B.	REVISED -		
	PLOT DATE = 1/4/2008	DATE - 06-16-04	REVISED -		SCALE: N.T.S. SHEET NO. OF SHEETS STA. TO STA.

F.A.P. RTE.	SECTION	COUNTY	TOTAL SHEETS	SHEET NO.
573	30-N(13)	KANE	219	155
	BD-51	CONTRACT NO. 60X70		
FED. ROAD DIST. NO.	ILLINOIS	FED. AID PROJECT		

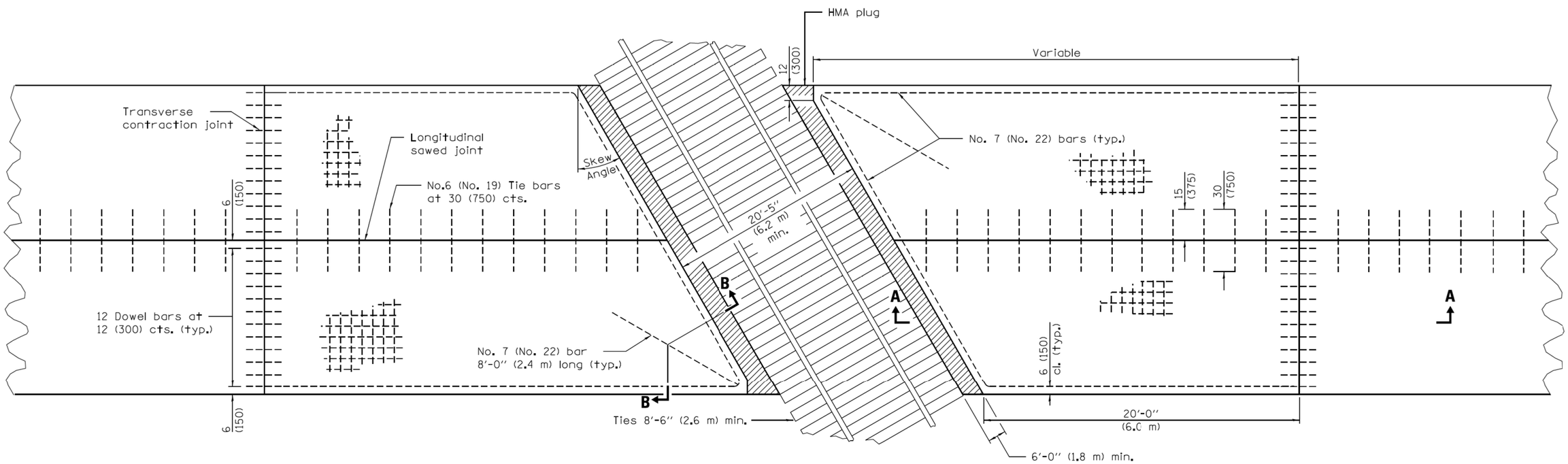

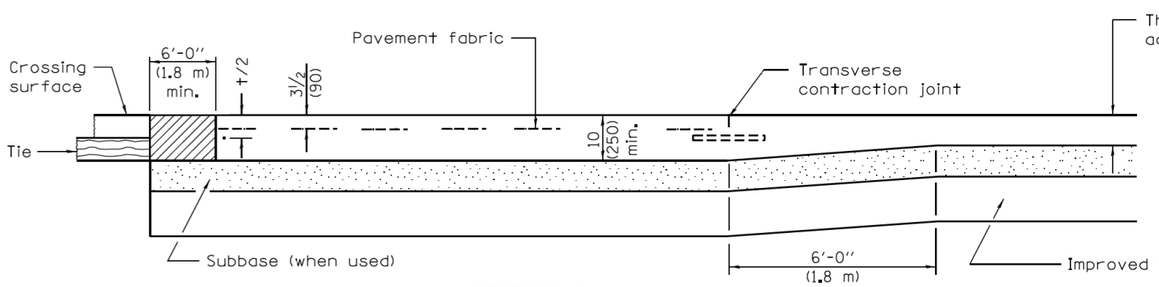

SECTION A–A
(FOR PCC PAVEMENT)

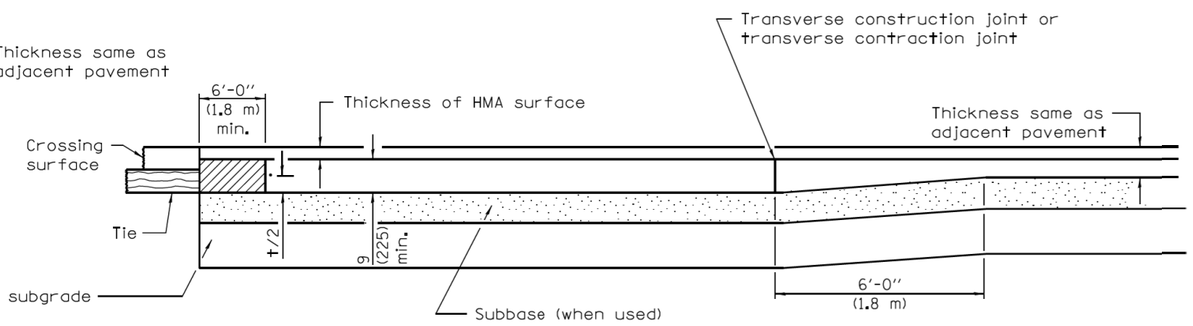

SECTION A–A
(FOR PCC BASE COURSE WITH HMA SURFACE)

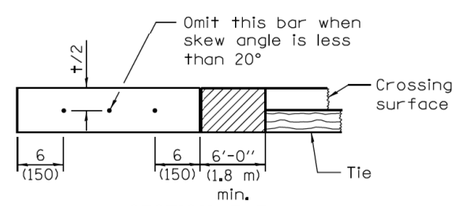

SECTION B–B

GENERAL NOTES

See Standard 420001 for joint details not shown.

All dimensions are in inches (millimeters) unless otherwise shown.

MODIFIED STATE STANDARD 420501-04

FILE NAME = c:\pw_work\pwidot\footemj\d0108315\bd56.dgn	USER NAME = footemj	DESIGNED - O. PATEL	REVISED - AT 10-28-13
		DRAWN -	REVISED -
	PLOT SCALE = 50.0000 ' / in.	CHECKED -	REVISED -
	PLOT DATE = 10/28/2013	DATE - 10-08-2013	REVISED -

STATE OF ILLINOIS
DEPARTMENT OF TRANSPORTATION

PCC PAVEMENT AND PCC BASE COURSE
ADJACENT TO RAILROAD GRADE CROSSING

SCALE: N.T.S. | SHEET NO. OF SHEETS | STA. TO STA.

F.A.P. RTE.	SECTION	COUNTY	TOTAL SHEETS	SHEET NO.
573	30-N(13)	KANE	219	156
	BD 56	CONTRACT NO. 60X70		
FED. ROAD DIST. NO.	ILLINOIS	FED. AID PROJECT		

COMPANY NAME:
PROJECT CONTACT:
CLIENT:
DATE PLOTTED: 10/14/2014 8:37:36 PM
FILE NAME: p9120113-sht-details-016-BD56.dgn
PLOT DRIVER: pdf.pltr
PEN TABLE: standard-trans.tbl

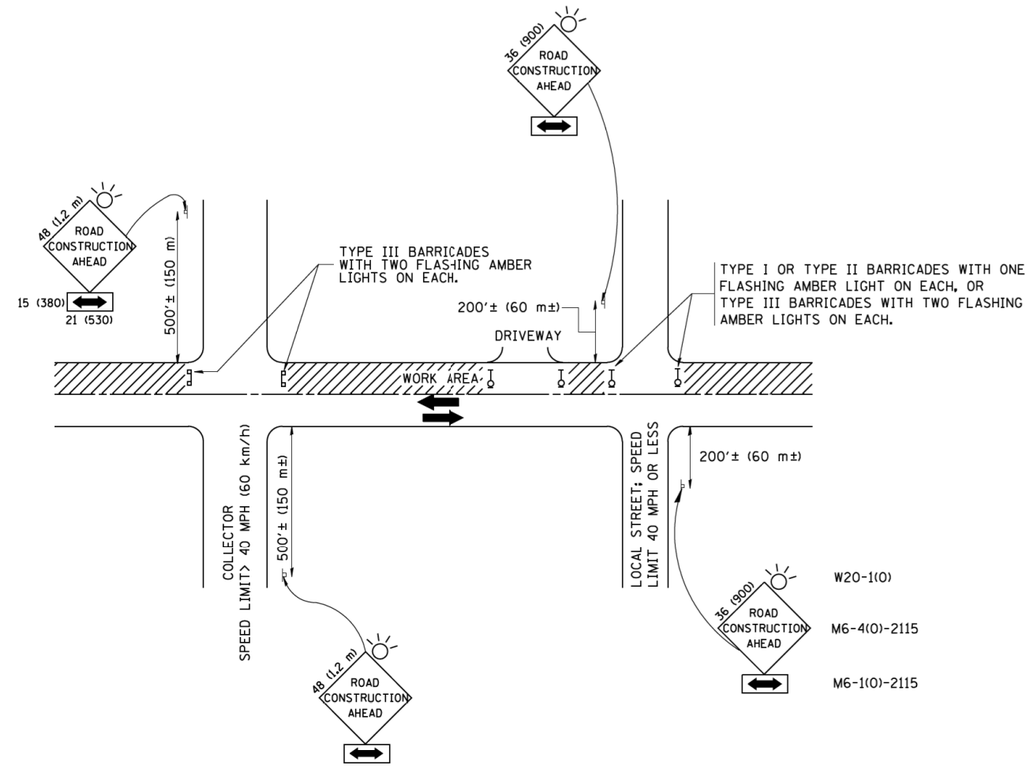

TRAFFIC CONTROL AND PROTECTION FOR SIDE ROADS, INTERSECTIONS, AND DRIVEWAYS

NOTES:

A. FOR NO LANE RESTRICTION ON THE SIDE ROAD OR DRIVEWAYS

1. SIDE ROAD WITH A SPEED LIMIT OF 40 MPH (60 km/h) OR LESS AS SHOWN ON THE DRAWING AND AS DIRECTED BY THE ENGINEER:

   a) ONE **ROAD CONSTRUCTION AHEAD** SIGN 36 x 36 (900x900) WITH A FLASHER AND FLAG MOUNTED ON IT APPROXIMATELY 200' (60 m) IN ADVANCE OF THE MAIN ROUTE.

   b) THE CLOSED PORTION OF THE MAIN ROUTE SHALL BE PROTECTED BY BLOCKING WITH TYPE I, TYPE II OR TYPE III BARRICADES, 1/3 OF THE CROSS SECTION OF THE CLOSED PORTION.

2. SIDE ROAD WITH A SPEED LIMIT GREATER THAN 40 MPH (60 km/h) AS SHOWN ON THE DRAWING AND AS DIRECTED BY THE ENGINEER:

   a) ONE **ROAD CONSTRUCTION AHEAD** SIGN 48 x 48 (1.2 m x 1.2 m) WITH A FLASHER MOUNTED ON IT APPROXIMATELY 500' (150 m) IN ADVANCE OF THE MAIN ROUTE.

   b) THE CLOSED PORTION OF THE MAIN ROUTE SHALL BE PROTECTED BY BLOCKING WITH TYPE III BARRICADES, 1/2 OF THE CROSS SECTION OF THE CLOSED PORTION.

3. WHEN THE SIDE ROAD LIES BETWEEN THE BEGINNING OF THE MAINLINE SIGNING AND THE WORK ZONE, A SINGLE HEADED ARROW (M6-1) SHALL BE USED IN LIEU OF THE DOUBLE HEADED ARROW (M6-4).

B. FOR A LANE CLOSURE ON A SIDE ROAD OR DRIVEWAY:

USE APPLICABLE PORTIONS OF THE TYPICAL APPLICATION OF TRAFFIC CONTROL DEVICES (STD. 701501, STD. 701606 OR THE APPROPRIATE STANDARD). THE SPACING OF SIGNS AND BARRICADES SHALL BE ADJUSTED FOR FIELD CONDITIONS AS DIRECTED BY THE ENGINEER. THE DIRECTIONAL ARROW SHALL BE COVERED OR REMOVED WHEN NO LONGER CONSISTENT WITH THE SIDE ROAD LANE CLOSURE.

C. ADVANCE WARNING SIGNS ARE TO BE OMITTED ON DRIVEWAY UNLESS OTHERWISE NOTED.

D. THE TRAFFIC CONTROL AND PROTECTION FOR SIDE ROADS, INTERSECTIONS, AND DRIVEWAYS SHALL BE INCIDENTAL TO THE COST OF SPECIFIED TRAFFIC CONTROL STANDARDS OR ITEMS.

All dimensions are in millimeters (inches) unless otherwise shown.

COMPANY NAME:
PROJECT CONTACT:
CLIENT:
DATE PLOTTED: 10/14/2014 8:38:38 PM
FILE NAME: p912013-sht-details-017-TC10.dgn
PLOT DRIVER: pdf.pt
PEN TABLE: standard-trans.tbl

FILE NAME = Wi\diststd\22x34\tc10.dgn	USER NAME = gaglianobt	DESIGNED - LHA	REVISED - J. OBERLE 10-18-95
		DRAWN -	REVISED - A. HOUSEH 03-06-96
	PLOT SCALE = 50.000 ' / IN.	CHECKED -	REVISED - A. HOUSEH 10-15-96
	PLOT DATE = 1/4/2008	DATE - 06-89	REVISED - T. RAMMACHER 01-06-00

STATE OF ILLINOIS
DEPARTMENT OF TRANSPORTATION

TRAFFIC CONTROL AND PROTECTION FOR SIDE ROADS, INTERSECTIONS, AND DRIVEWAYS

SCALE: N.T.S. | SHEET NO. OF SHEETS | STA. TO STA.

F.A.P. RTE.	SECTION	COUNTY	TOTAL SHEETS	SHEET NO.
573	30-N(13)	KANE	219	157
	TC-10	CONTRACT NO. 60X70		
FED. ROAD DIST. NO.	ILLINOIS	FED. AID PROJECT		

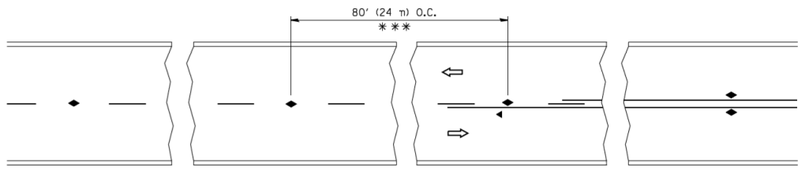

*** REDUCE TO 40' (12 m) O.C. ON CURVES WITH POSTED OR ADVISORY SPEED 45 M.P.H. (70 km/h) OR LESS.

TWO-LANE/TWO-WAY

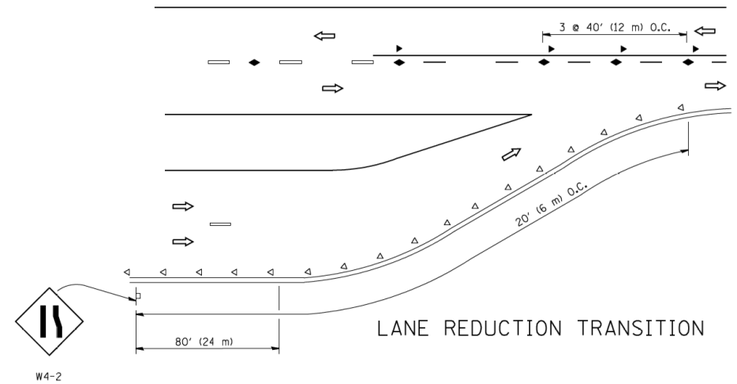

LANE REDUCTION TRANSITION

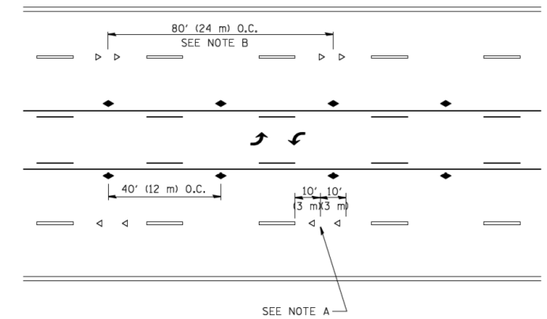

TWO-WAY LEFT TURN

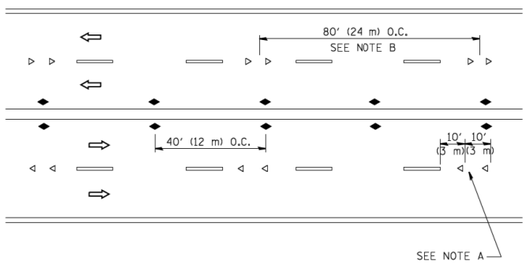

MULTI-LANE/UNDIVIDED

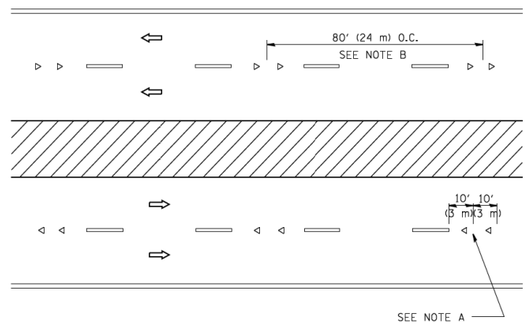

MULTI-LANE/DIVIDED

GENERAL NOTES

1. MARKERS USED WITH DASHED LINES SHALL BE CENTERED IN THE GAP BETWEEN SEGMENTS.
2. MARKERS USED ADJACENT TO SOLID LINES SHALL BE OFFSET 2 TO 3 (50 TO 75) TOWARD TRAFFIC AS SHOWN.
3. MARKERS THROUGH TANGENTS LESS THAN 500' (150 m) IN LENGTH BETWEEN CURVES SHALL BE INSTALLED AT THE LESSER OF THE TWO CURVE SPACINGS.

SYMBOLS

- YELLOW STRIPE
- WHITE STRIPE
- ONE-WAY AMBER MARKER
- ONE-WAY CRYSTAL MARKER (W/O)
- TWO-WAY AMBER MARKER

LANE MARKER NOTES

A. USE DOUBLE LANE LINE MARKERS SPACED AS SHOWN.

B. REDUCE TO 40' (12 m) O.C. ON CURVES WHERE ADVISORY SPEEDS ARE 10 M.P.H (20 km/h) LOWER THAN POSTED SPEEDS.

DESIGN NOTES

1. DOUBLE LANE LINE MARKERS SHALL BE USED UNLESS SPECIFIED OTHERWISE.
2. EXCEPT AS SHOWN ON THE LANE REDUCTION TRANSITION AND FREEWAY EXIT RAMP DETAIL, MARKERS ARE NOT TO BE SPECIFIED ON RIGHT EDGE LINES.
3. THE EXACT MARKER LIMITS, SPACING, AND COLOR SHALL BE INCLUDED IN THE PLANS WHEN STANDARD SPECIFICATIONS ARE NOT BEING USED.
4. MARKERS SHOULD NOT BE USED ALONGSIDE CURBS EXCEPT FOR EXTREMELY SHORT SECTIONS OF CURBS WHERE NOT MORE THAN TWO MARKERS WOULD BE INVOLVED.

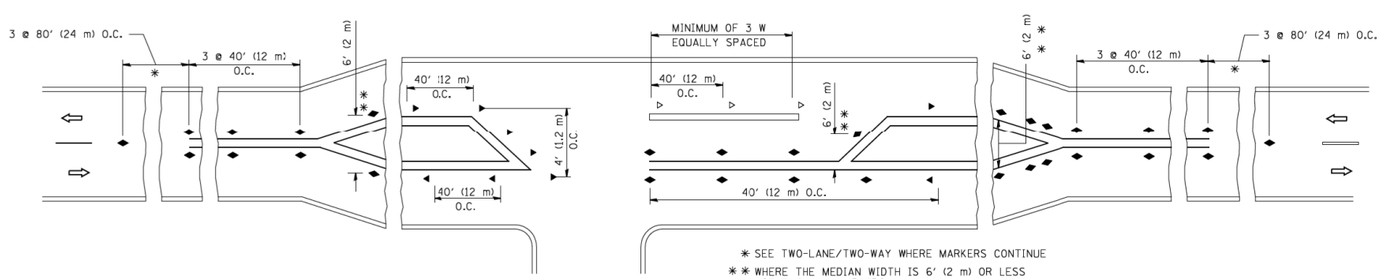

* SEE TWO-LANE/TWO-WAY WHERE MARKERS CONTINUE

** WHERE THE MEDIAN WIDTH IS 6' (2 m) OR LESS USE TWO-WAY MARKERS.

LEFT TURN

All dimensions are in inches (millimeters) unless otherwise shown.

COMPANY NAME:
PROJECT CONTACT:
CLIENT:
DATE PLOTTED: 10/14/2014 8:39:40 PM
FILE NAME: p91201l3-sht-details-018-TC11.dgn
PLOT DRIVER: pdf.pH
PEN TABLE: standard-trans.tbl

FILE NAME = c:\pw_work\pwidot\leysa\d0108315\tc11.dgn	USER NAME = leysa	DESIGNED -	REVISED - T. RAMMACHER 09-19-94	STATE OF ILLINOIS DEPARTMENT OF TRANSPORTATION
		DRAWN -	REVISED - T. RAMMACHER 03-12-99	
	PLOT SCALE = 50.000 ' / IN.	CHECKED -	REVISED - T. RAMMACHER 01-06-00	
	PLOT DATE = 3/2/2011	DATE -	REVISED - C. JUCIUS 09-09-09	

TYPICAL APPLICATIONS
RAISED REFLECTIVE PAVEMENT MARKERS (SNOW-PLOW RESISTANT)

SCALE: N.T.S. | SHEET NO. OF SHEETS | STA. TO STA.

F.A.P. RTE.	SECTION	COUNTY	TOTAL SHEETS	SHEET NO.
573	30-N(13)	KANE	219	158
	TC-11	CONTRACT NO. 60X70		
FED. ROAD DIST. NO.	ILLINOIS	FED. AID PROJECT		

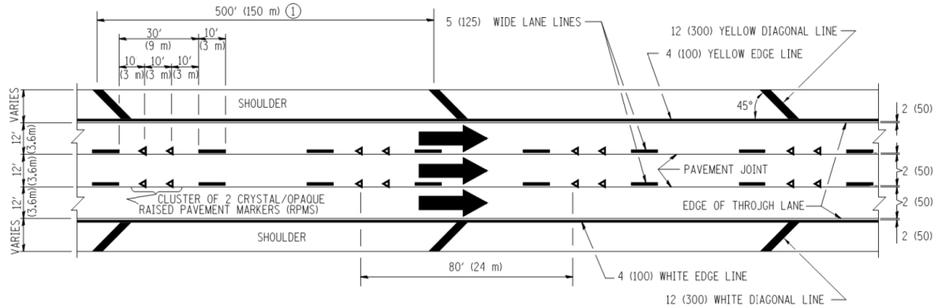

TYPICAL EDGE LINES & LANE LINES

PAVEMENT MARKING MATERIALS

1. THERMO PLASTIC PAVEMENT MARKING LINE SHALL BE USED FOR THE EDGE LINES, GORE LINES, AND DIAGONAL LINES ON BITUMINOUS PAVEMENT ONLY.
2. PREFORMED PLASTIC TYPE B PAVEMENT MARKING LINE; INLAID OR GROOVED IN SHALL BE USED FOR ALL LANE LINES ON HMA PAVEMENT PROJECTS.
3. POLYUREA PAVEMENT MARKING SHALL BE USED FOR ALL MARKINGS ON PCC PROJECTS.

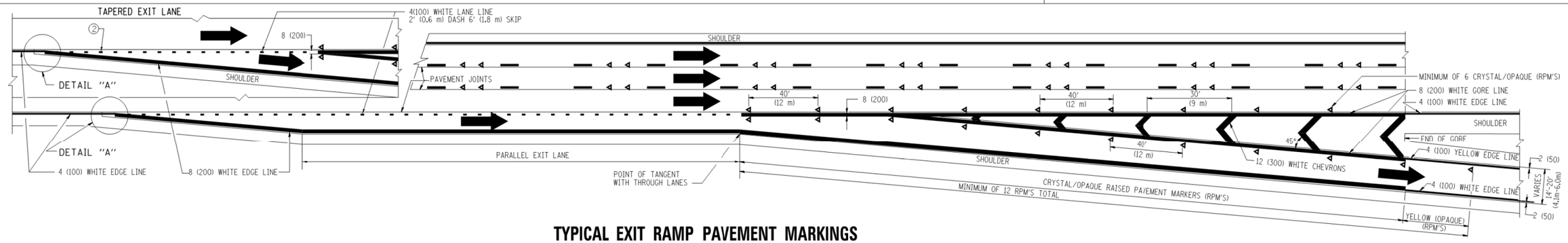

TYPICAL EXIT RAMP PAVEMENT MARKINGS

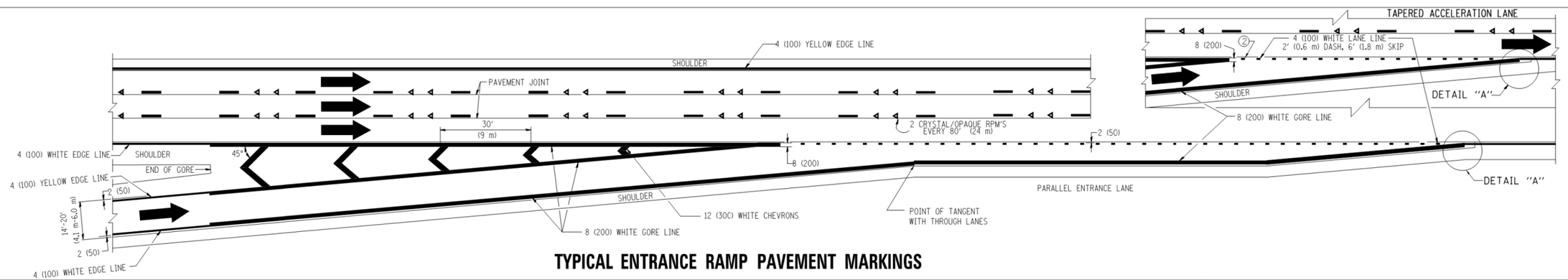

TYPICAL ENTRANCE RAMP PAVEMENT MARKINGS

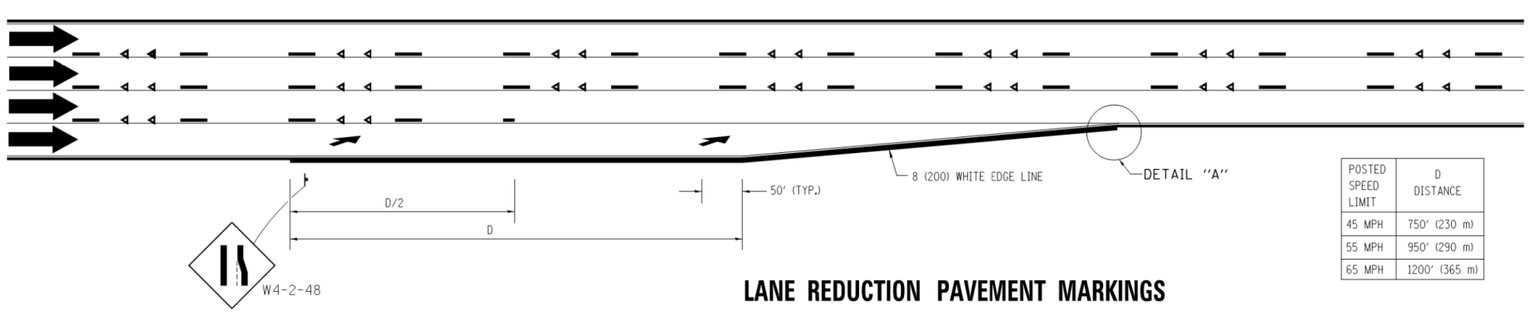

POSTED SPEED LIMIT	D DISTANCE
45 MPH	750' (230 m)
55 MPH	950' (290 m)
65 MPH	1200' (365 m)

LANE REDUCTION PAVEMENT MARKINGS

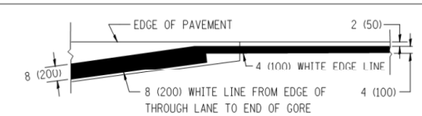

NOTES:

① THE DIAGONAL LINES SHALL BE SPACED AT 40' (12 m) C-C ACROSS ALL STRUCTURES WHICH ARE 500' (150 m) OR LESS IN LENGTH. THE DIAGONAL LINES ARE NOT REQUIRED ON SHOULDERS WHICH ARE 6' (1.8 m) OR LESS IN WIDTH.

② 4" (2' DASH, 6' SKIP) MARKING ON TAPERED ENTRANCE AND EXIT RAMP SHALL BE OMITTED ON TANGENT SECTIONS.

COMPANY NAME:
PROJECT CONTACT:
CLIENT:
DATE PLOTTED: 10/14/2014 8:40:47 PM
FILE NAME: P912013-sht-details-019-TC12.dgn
PLOT DRIVER: pdf.pltr
PEN TABLES: standard-trans.tbl

FILE NAME = c:\pw_work\pwidot\footemj\d0108315\tc12.dgn	USER NAME = footemj	DESIGNED - D.W.S.	REVISED - J.A.F. 02-06	STATE OF ILLINOIS DEPARTMENT OF TRANSPORTATION	MULTI-LANE FREEWAY PAVEMENT MARKING DETAILS			F.A. RTE.	SECTION	COUNTY	TOTAL SHEETS	SHEET NO.
		DRAWN -	REVISED - S.P.B. 01-07					573	30-N(13)	KANE	219	159
	PLOT SCALE = 50.000 ' / in.	CHECKED -	REVISED - S.P.B. 01-10					TC-12		CONTRACT NO. 60X70		
	PLOT DATE = 7/8/2013	DATE - 01-90	REVISED - M.D. 05-13		SCALE: NONE	SHEET NO. 1 OF 2 SHEETS	STA. TO STA.	FED. ROAD DIST. NO. 1	ILLINOIS	FED. AID PROJECT		

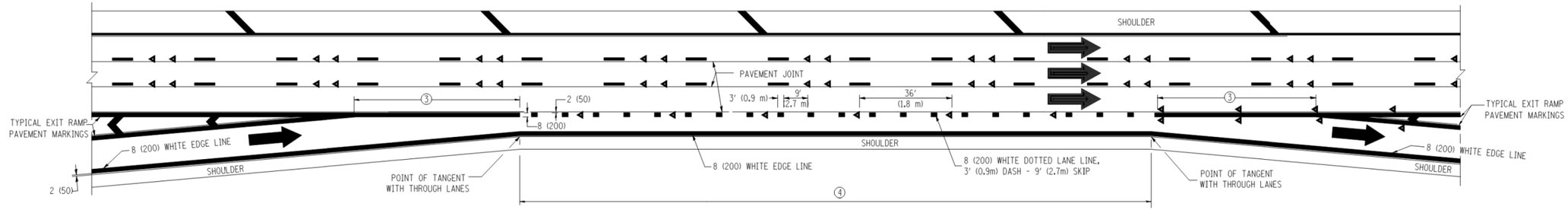

AUXILIARY LANE MARKINGS

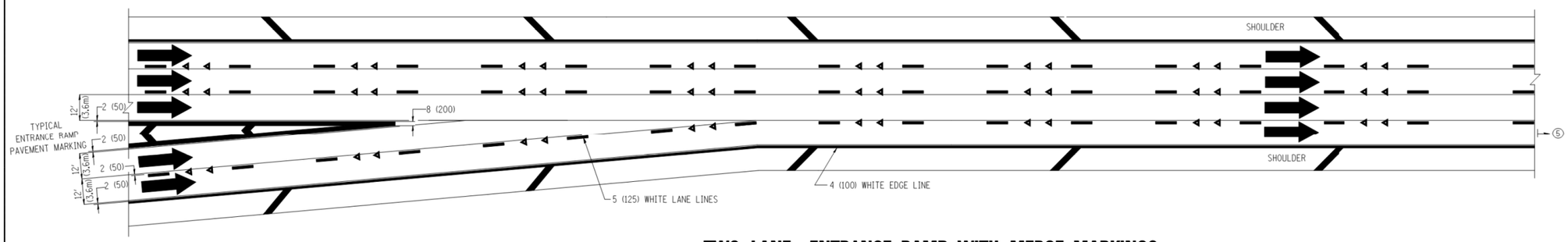

TWO LANE ENTRANCE RAMP WITH MERGE MARKINGS

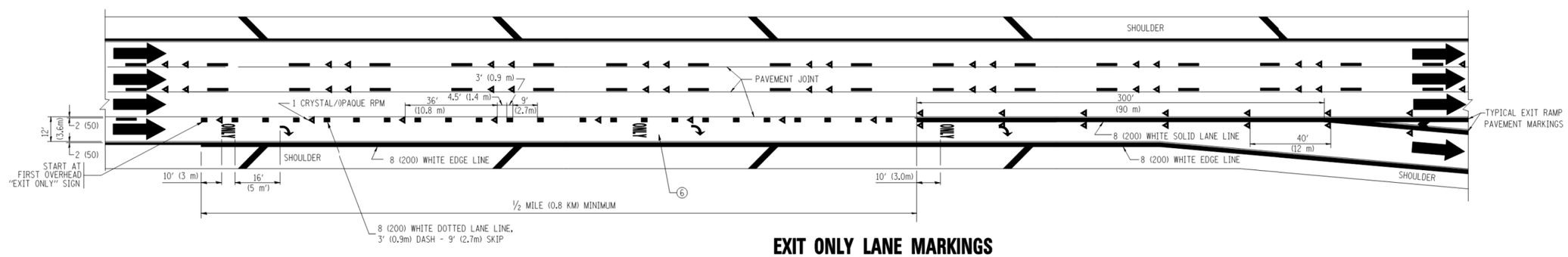

EXIT ONLY LANE MARKINGS

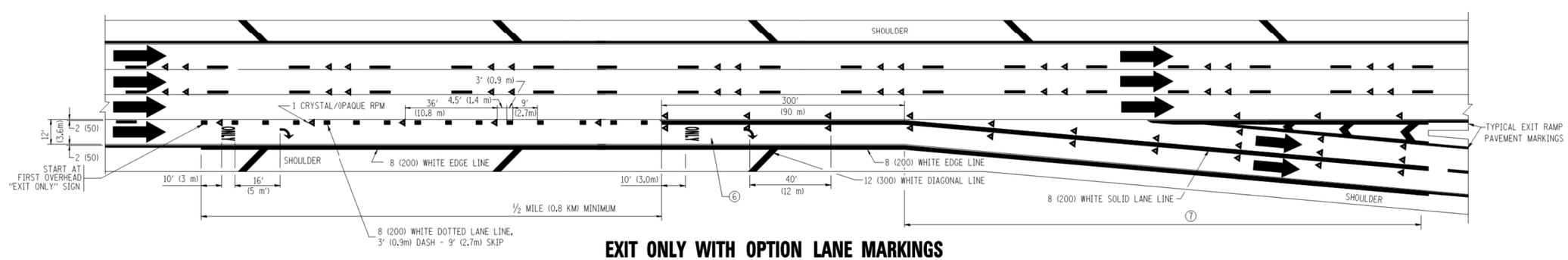

EXIT ONLY WITH OPTION LANE MARKINGS

NOTES

③ OMIT WHEN LENGTH OF AUXILIARY LANE IS LESS THAN 500' (150 m).

④ 8-INCH WIDE DOTTED LANE LINE MARKINGS SHALL BE USED WHEN THE LENGTH OF THE AUXILIARY LANE IS 2 MILES OR LESS.

⑤ FOR TWO-LANE ENTRANCE RAMP, IF RIGHT LANE ENDS, USE TYPICAL ENTRANCE RAMP PAVEMENT MARKINGS.

⑥ ONLY AND ARROWS EQUALLY SPACED, 500' (150 m) MAXIMUM SPACING. FULL SIZE LETTERS AND ARROW SHALL BE USED.

⑦ CONTINUE 8" SOLID LANE LINE THROUGH EXIT TO END OF PAVED GORE.

COMPANY NAME: 10/14/2014 8:41:08 PM
PROJECT CONTACT: P912013-sht-details-019-TC12.dgn
CLIENT: pdf.pltt
DATE PLOTTED: standard-trans.tbl
FILE NAME:
PLOT DRIVER:
PEN TABLE:

FILE NAME = c:\pw_work\PWIDOT\LEYSA\d0108315\tc12.dgn	USER NAME = leysa	DESIGNED - D.W.S.	REVISED - D.W.S. 07-96	STATE OF ILLINOIS DEPARTMENT OF TRANSPORTATION	MULTI-LANE FREEWAY PAVEMENT MARKING DETAILS	F.A. RTE. 573	SECTION 30-N(13)	COUNTY KANE	TOTAL SHEETS 219 / SHEET NO. 160
		DRAWN -	REVISED - J.A.F. 02-06				TC-12	CONTRACT NO. 60X70	
	PLOT SCALE = 50.000 ' / IN.	CHECKED -	REVISED - S.P.B. 01-07		SCALE: NONE / SHEET NO. 2 OF 2 SHEETS / STA. / TO STA.	FED. ROAD DIST. NO. 1	ILLINOIS	FED. AID PROJECT	
	PLOT DATE = 1/22/2010	DATE - 01-90	REVISED - S.P.B. 01-10						

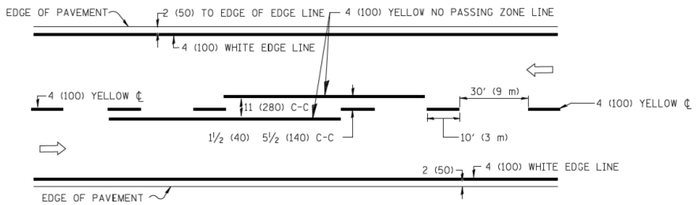

2-LANE ROADWAY

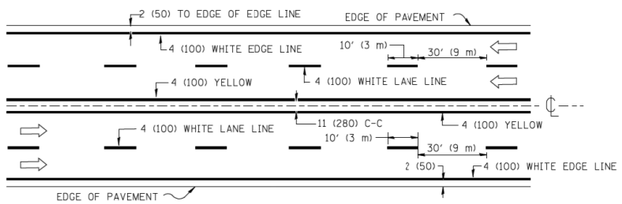

MULTI-LANE UNDIVIDED

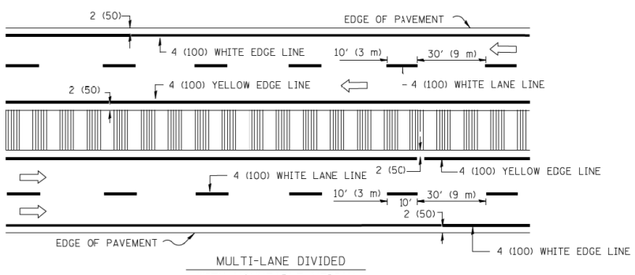

MULTI-LANE DIVIDED
WITH MOUNTABLE MEDIAN

NOTE: MEDIANS WITH BARRIER CURB DO NOT REQUIRE AN EDGE LINE

TYPICAL LANE AND EDGE LINE MARKING

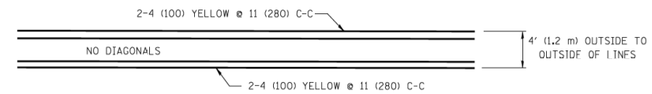

4' (1.2 m) WIDE MEDIANS ONLY

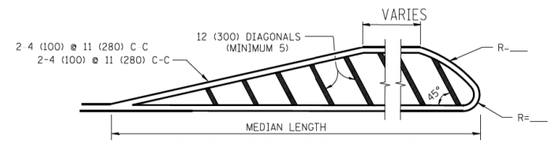

FOR MEDIAN LENGTHS WHERE DIAGONAL SPACING CANNOT BE ATTAINED, USE 5 (FIVE) EQUALLY SPACED DIAGONAL LINES.

DIAGONAL LINE SPACING: 50' (15 m) C-C (LESS THAN 30MPH (50 km/h))
75' (25 m) C-C 30MPH (50 km/h) TO 45MPH (70 km/h))
150' (45 m) C-C (MORE THAN 45MPH (70 km/h))

MEDIANS OVER 4' (1.2 m) WIDE

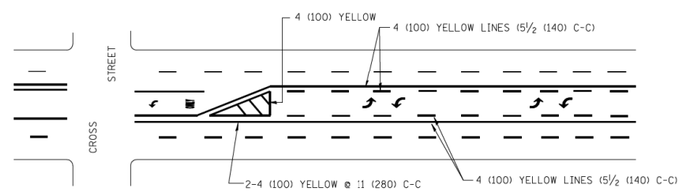

A MINIMUM OF TWO PAIRS OF TURN ARROWS SHALL BE USED, WHITE IN COLOR. ADDITIONAL PAIRS SHALL BE PLACED AT 200' (60 m) TO 300' (90 m) INTERVALS.

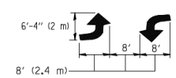

MEDIAN WITH TWO-WAY LEFT TURN LANE

TYPICAL PAINTED MEDIAN MARKING

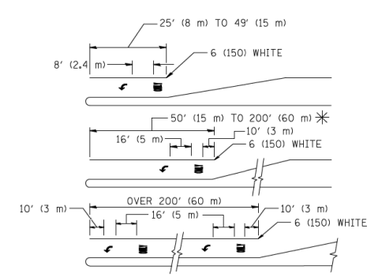

FULL SIZE LETTERS 8' (2.4 m) AND ARROWS SHALL BE USED.
AREA = 15.6 SQ. FT. (1.5 m^2) **ONLY** AREA = 20.8 SQ. FT. (1.9 m^2)

✳ TURN LANES IN EXCESS OF 400' (120 m) IN LENGTH MAY HAVE AN ADDITIONAL SET OF ARROW - "ONLY" INSTALLED MIDWAY BETWEEN THE OTHER TWO SETS OF ARROW - "ONLY".

TYPICAL LEFT (OR RIGHT) TURN LANE

TYPICAL TURN LANE MARKING

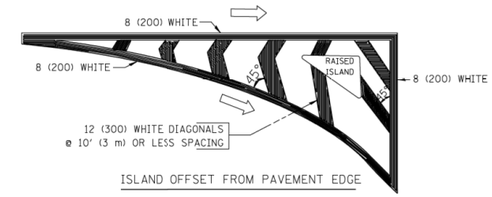

ISLAND OFFSET FROM PAVEMENT EDGE

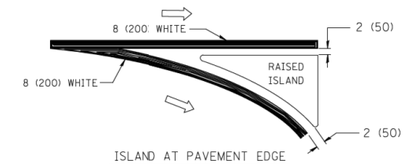

ISLAND AT PAVEMENT EDGE

TYPICAL ISLAND MARKING

TYPE OF MARKING	WIDTH OF LINE	PATTERN	COLOR	SPACING / REMARKS
CENTERLINE ON 2 LANE PAVEMENT	4 (100)	SKIP-DASH	YELLOW	10' (3 m) LINE WITH 30' (9 m) SPACE
CENTERLINE ON MULTI-LANE UNDIVIDED PAVEMENT	2 @ 4 (100)	SOLID	YELLOW	11 (280) C-C
NO PASSING ZONE LINES: FOR ONE DIRECTION FOR BOTH DIRECTIONS	4 (100) 2 @ 4 (100)	SOLID SOLID	YELLOW YELLOW	5½ (140) C-C FROM SKIP-DASH CENTERLINE 11 (280) C-C OMIT SKIP-DASH CENTERLINE BETWEEN
LANE LINES	4 (100) 5 (125) ON FREEWAYS	SKIP-DASH SKIP-DASH	WHITE WHITE	10' (3 m) LINE WITH 30' (9 m) SPACE
DOTTED LINES (EXTENSIONS OF CENTER, LANE OR TURN LANE MARKINGS)	SAME AS LINE BEING EXTENDED	SKIP-DASH	SAME AS LINE BEING EXTENDED	2' (600) LINE WITH 6' (1.8 m) SPACE
EDGE LINES	4 (100)	SOLID	YELLOW-LEFT WHITE-RIGHT	OUTLINE MOUNTABLE MEDIANS IN YELLOW; EDGE LINES ARE NOT USED NEXT TO BARRIER CURB
TURN LANE MARKINGS	6 (150) LINE; FULL SIZE LETTERS & SYMBOLS (8' (2.4m))	SOLID	WHITE	SEE TYPICAL TURN LANE MARKING DETAIL
TWO WAY LEFT TURN MARKING	2 @ 4 (100) EACH DIRECTION 8' (2.4m) LEFT ARROW	SKIP-DASH AND SOLID IN PAIRS	YELLOW WHITE	10' (3 m) LINE WITH 30' (9 m) SPACE FOR SKIP-DASH; 5½ (140) C-C BETWEEN SOLID LINE AND SKIP-DASH LINE SEE TYPICAL TWO-WAY LEFT TURN MARKING DETAIL
CROSSWALK LINES (PEDESTRIAN) A. DIAGONALS (BIKE & EQUESTRIAN) B. LONGITUDINAL BARS (SCHOOL)	2 @ 6 (150) 12 (300) @ 45° 12 (300) @ 90°	SOLID SOLID SOLID	WHITE WHITE WHITE	NOT LESS THAN 6' (1.8 m) APART 2' (600) APART 2' (600) APART SEE TYPICAL CROSSWALK MARKING DETAILS.
STOP LINES	24 (600)	SOLID	WHITE	PLACE 4' (1.2 m) IN ADVANCE OF AND PARALLEL TO CROSSWALK, IF PRESENT. OTHERWISE, PLACE AT DESIRED STOPPING POINT. PARALLEL TO CROSSROAD CENTERLINE, WHERE POSSIBLE
PAINTED MEDIANS	2 @ 4 (100) WITH 12 (300) DIAGONALS @ 45° NO DIAGONALS USED FOR 4' (1.2 m) WIDE MEDIANS	SOLID	YELLOW: TWO WAY TRAFFIC WHITE: ONE WAY TRAFFIC	11 (280) C-C FOR THE DOUBLE LINE SEE TYPICAL PAINTED MEDIAN MARKING.
GORE MARKING AND CHANNELIZING LINES	8 (200) WITH 12 (300) DIAGONALS @ 45°	SOLID	WHITE	DIAGONALS: 15' (4.5 m) C-C (LESS THAN 30MPH (50 km/h)) 20' (6 m) C-C 30MPH (50 km/h) TO 45MPH (70 km/h)) 30' (9 m) C-C (OVER 45MPH (70 km/h))
RAILROAD CROSSING	24 (600) TRANSVERSE LINES; "RR" 15 6' (1.8 m) LETTERS; 16 (400) LINE FOR "X"	SOLID	WHITE	SEE STATE STANDARD 780001 AREA OF: "R"=3.6 SQ. FT. (0.33 m^2) EACH "X"=54.0 SQ. FT. (5.0 m^2)
SHOULDER DIAGONALS	12 (300) @ 45°	SOLID	WHITE - RIGHT YELLOW - LEFT	50' (15 m) C-C (LESS THAN 30MPH (50 km/h)) 75' (25 m) C-C (30 MPH (50 km/h) TO 45MPH (70 km/h)) 150' (45 m) C-C (OVER 45MPH (70 km/h))

FOR FURTHER DETAILS ON PAVEMENT MARKING REFER TO STANDARD SPECIFICATIONS FOR ROAD AND BRIDGE CONSTRUCTION AND STATE STANDARD 780001.

All dimensions are in inches (millimeters) unless otherwise shown.

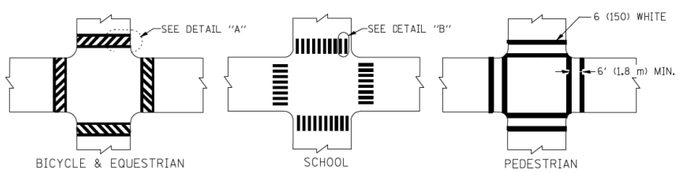

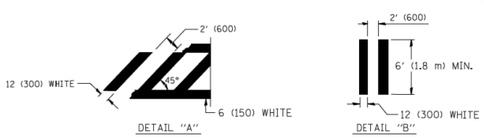

TYPICAL CROSSWALK MARKING

COMPANY NAME:
PROJECT CONTACT:
CLIENT:
DATE PLOTTED: 10/14/2014 8:41:31 PM
FILE NAME: p912013-sht-details-020-TC13.dgn
PLOT DRIVER: pdf.pltr
PEN TABLE: standard-trans.tbl

FILE NAME = c:\pw_work\pwidot\drivakosgn\d0103115\tc13.dgn	USER NAME = drivakosgn	DESIGNED - EVERS	REVISED -T. RAMMACHER 10-27-94
		DRAWN -	REVISED -C. JUCIUS 09-09-09
	PLOT SCALE = 50.000 ' / IN.	CHECKED -	REVISED -
	PLOT DATE = 9/9/2009	DATE - 03-19-90	REVISED -

STATE OF ILLINOIS
DEPARTMENT OF TRANSPORTATION

DISTRICT ONE
TYPICAL PAVEMENT MARKINGS

SCALE: N.T.S. | SHEET NO. OF SHEETS | STA. TO STA.

F.A.P. RTE.	SECTION	COUNTY	TOTAL SHEETS	SHEET NO.
573	30-N(13)	KANE	219	161
	TC-13	CONTRACT NO. 60X70		
FED. ROAD DIST. NO.	ILLINOIS	FED. AID PROJECT		

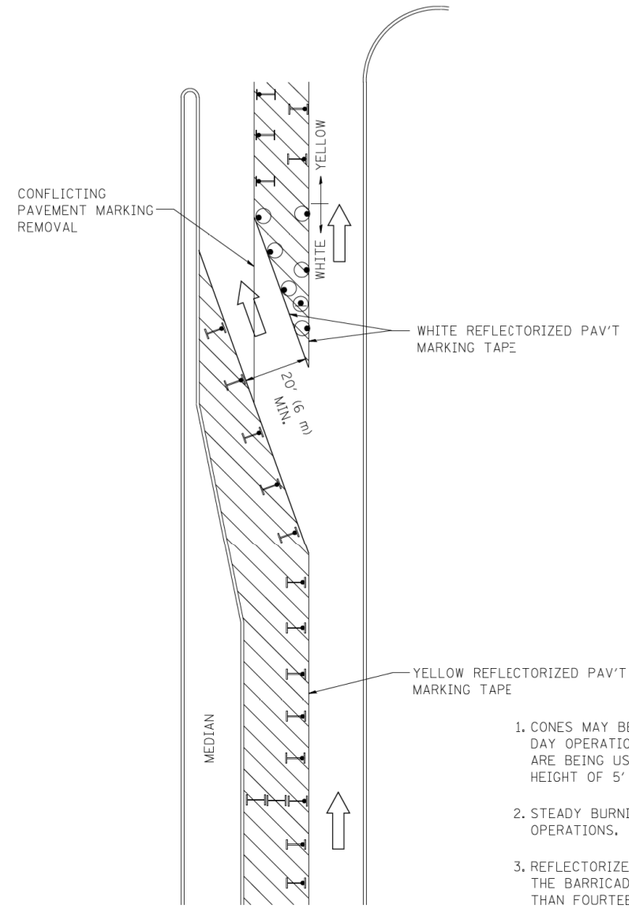

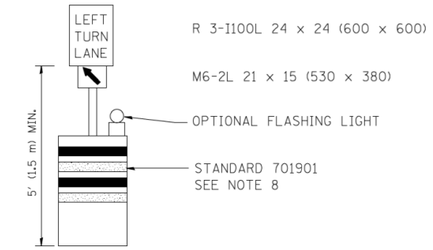

GENERAL NOTES

1. CONES MAY BE SUBSTITUTED FOR BARRICADES OR DRUMS AT HALF THE SPACING DURING DAY OPERATIONS. CONES SHALL BE A MINIMUM OF 28 (710) IN HEIGHT. WHEN CONES ARE BEING USED, THE "LEFT TURN LANE" SIGN MAY BE SKID MOUNTED AT A MINIMUM HEIGHT OF 5' (1.5 m).
2. STEADY BURNING LIGHTS WILL NOT BE REQUIRED ON BARRICADES OR DRUMS FOR DAY OPERATIONS. ALL LIGHTS SHALL BE MONODIRECTIONAL.
3. REFLECTORIZED TEMPORARY PAVEMENT MARKING TAPE SHALL BE PLACED THROUGHOUT THE BARRICADED AREA OF EACH TURN BAY WHERE THE CLOSURE TIME IS GREATER THAN FOURTEEN DAYS.
4. THIS APPLICATION ALSO APPLIES WHEN WORK IS BEING PERFORMED IN THE RIGHT LANE(S) AND THE RIGHT TURN BAY IS TO REMAIN OPEN. UNDER THIS CONDITION, "RIGHT TURN LANE" R3-100 24 x 24 (600 x 600) AND M6-2R 21 x 15 (530 x 380) SHALL BE USED.
5. THESE CONTROLS SHALL SUPPLEMENT MAINLINE TRAFFIC CONTROL FOR LANE CLOSURES.
6. LONGITUDINAL DIMENSIONS MAY BE ADJUSTED TO FIT FIELD CONDITIONS.
7. FORM OPER 725 IS REQUIRED.
8. IF A DRUM OR TYPE II BARRICADE WITH AN ATTACHED SIGN PANEL WHICH MEETS NCHRP 350 REQUIREMENTS IS NOT AVAILABLE, THE SIGNS SHALL BE MOUNTED, ABOVE THE BARRICADES, ON SEPARATE SIGNS SUPPORTS THAT MEET NCHR 350 PREQUIREMENTS.
9. TRAFFIC CONTROL AND PROTECTION AT TURN BAYS (TO REMAIN OPEN TO TRAFFIC) SHALL BE INCLUDED IN THE COST SPECIFIED TRAFFIC CONTROL STANDARDS OR ITEMS.

All dimensions are in inches (millimeters) unless otherwise shown.

LEGEND

- WORK AREA
- LANE OPEN TO TRAFFIC
- TYPE I OR II BARRICADE WITH STEADY BURN LIGHT
- DRUM WITH STEADY BURN LIGHT
- DRUM WITH SIGN (WITH OPTIONAL FLASHING LIGHT) SEE DETAIL
- TYPE I OR II CHECK BARRICADE WITH FLASHING LIGHT

COMPANY NAME:
PROJECT CONTACT:
CLIENT:
DATE PLOTTED: 10/14/2014 8:43:26 PM
FILE NAME: p912013-sht-details-021-TC14.dgn
PLOT DRIVER: pdf.plt
PEN TABLE: standard-trans.tbl

FILE NAME = c:\pw_work\PWIDOT\DRIVAKOSGN\d0108315\tc14.dgn	USER NAME = drivakosgn	REVISED -T. RAMMACHER 09-08-94	REVISED - R. BORO 09-14-09
		REVISED - A. HOUSEH 11-07-95	REVISED -
	PLOT SCALE = 49.9999 ' / IN.	REVISED - A. HOUSEH 10-12-96	REVISED -
	PLOT DATE = 9/14/2009	REVISED -T. RAMMACHER 01-06-00	REVISED -

STATE OF ILLINOIS
DEPARTMENT OF TRANSPORTATION

TRAFFIC CONTROL AND PROTECTION AT TURN BAYS
(TO REMAIN OPEN TO TRAFFIC)

SCALE: N.T.S. | SHEET NO. OF SHEETS | STA. TO STA.

F.A.P. RTE.	SECTION	COUNTY	TOTAL SHEETS	SHEET NO.
573	30-N(13)	KANE	219	162
	TC-14	CONTRACT NO. 60X70		
FED. ROAD DIST. NO.	ILLINOIS	FED. AID PROJECT		

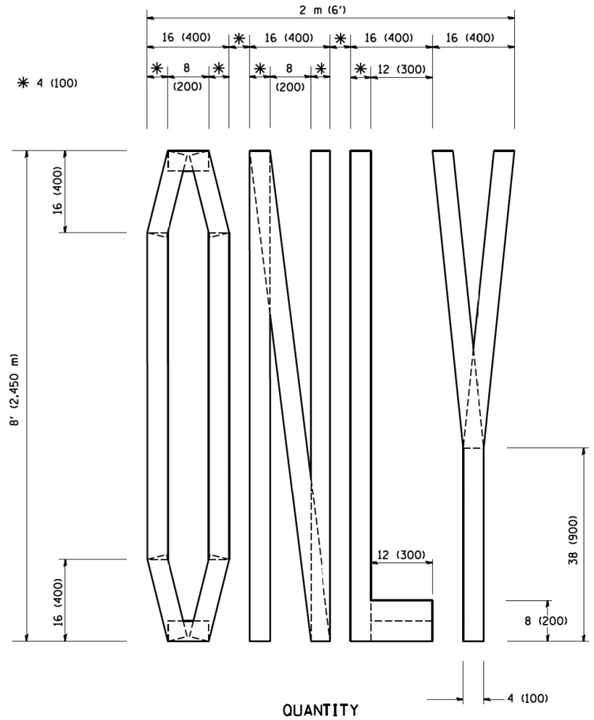

QUANTITY
4 (100) LINE = 64.1 ft. (19.7 m)
21.1 sq. ft. (1.97 sq. m)

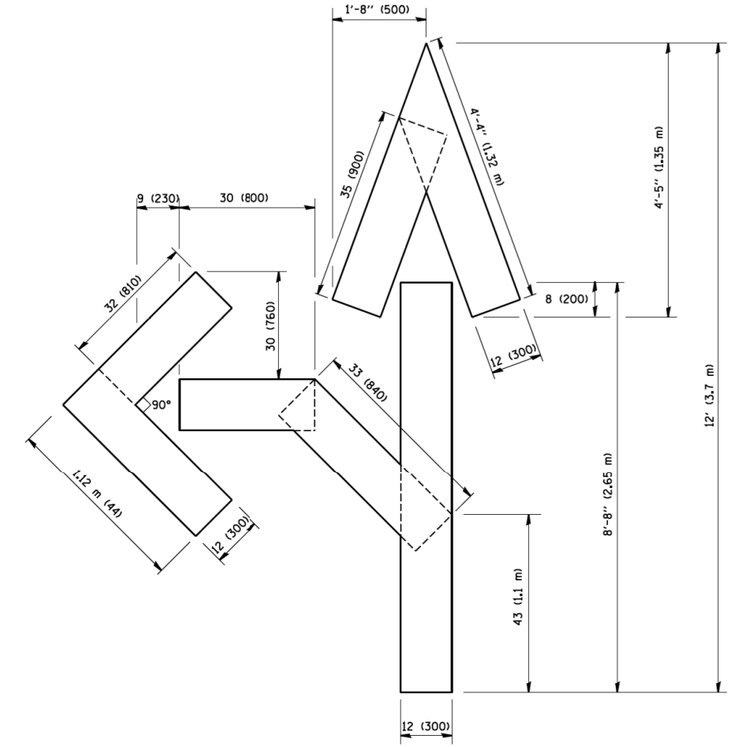

QUANTITY
4 (100) LINE = 82.5 ft. (25.3 m)
27.5 sq. ft. (2.53 sq. m)

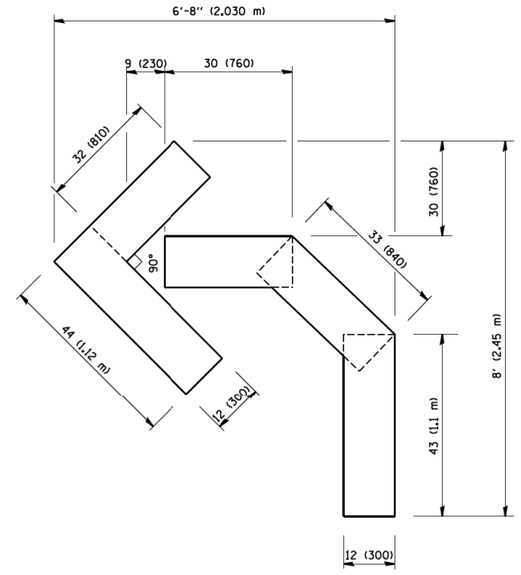

QUANTITY
4 (100) LINE = 45.5 ft. (13.9 m)
15.2 sq. ft. (1.39 sq. m)

All dimensions are in inches (millimeters) unless otherwise shown.

COMPANY NAME:
PROJECT CONTACT:
CLIENT:
DATE PLOTTED: 10/14/2014 8:44:23 PM
FILE NAME: p9120113-sht-details-022-TC16.dgn
PLOT DRIVER: pdf.plt
PEN TABLE: standard-trans.tbl

FILE NAME = W:\diststd\22x34\tc16.dgn	USER NAME = geglianobt	DESIGNED -	REVISED -T. RAMMACHER 06-05-96	STATE OF ILLINOIS DEPARTMENT OF TRANSPORTATION
		DRAWN -	REVISED -T. RAMMACHER 11-04-97	
	PLOT SCALE = 50.0000 ' / IN.	CHECKED -	REVISED -T. RAMMACHER 03-02-98	
	PLOT DATE = 1/4/2008	DATE - 09-18-94	REVISED -E. GOMEZ 08-28-00	

PAVEMENT MARKING LETTERS AND SYMBOLS FOR TRAFFIC STAGING

SCALE: N.T.S. | SHEET NO. OF SHEETS | STA. TO STA.

F.A.P. RTE.	SECTION	COUNTY	TOTAL SHEETS	SHEET NO.
573	30-N(13)	KANE	219	163

TC-16 CONTRACT NO. 60X70

FED. ROAD DIST. NO. | ILLINOIS | FED. AID PROJECT

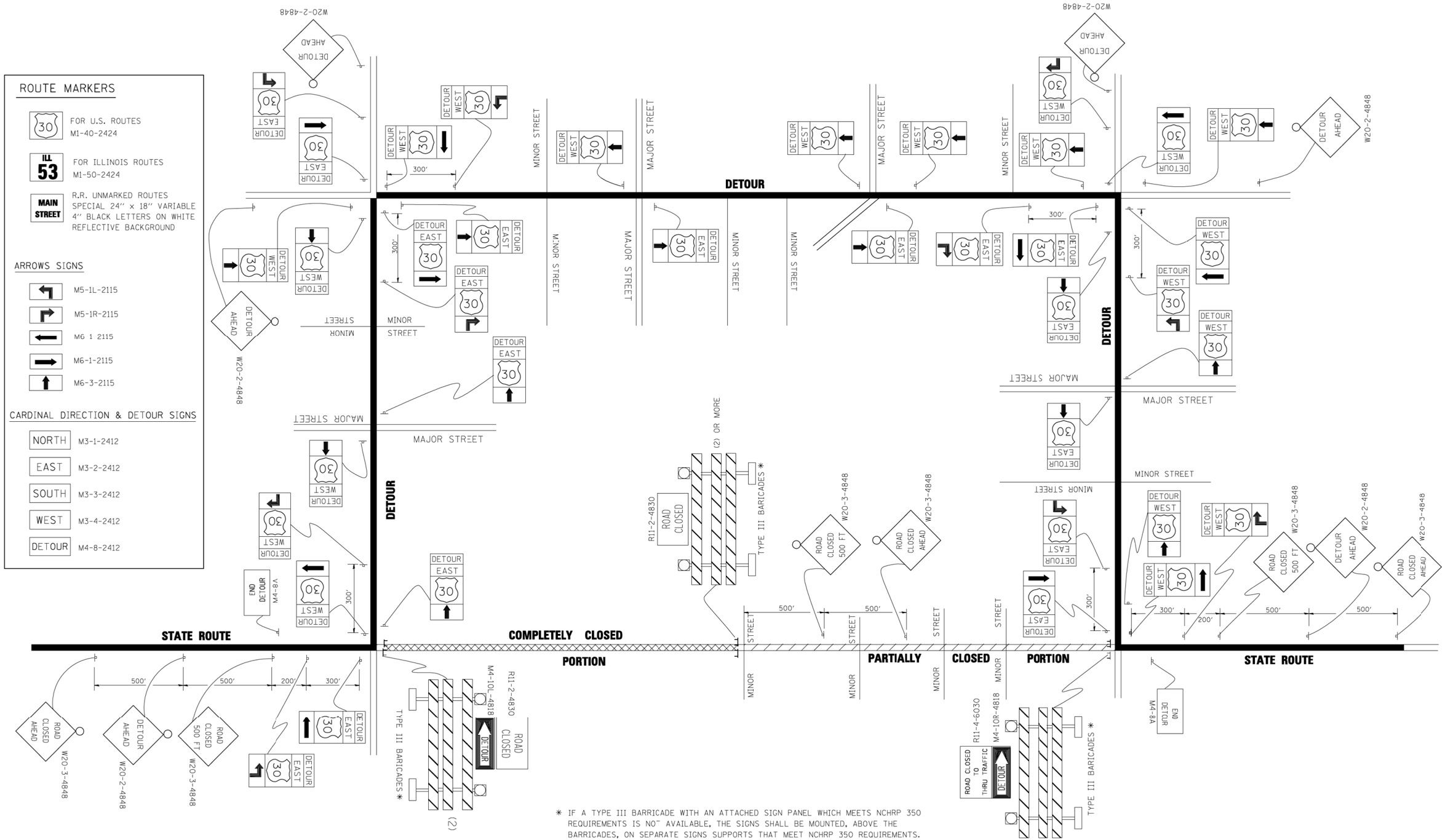

COMPANY NAME:
PROJECT CONTACT:
CLIENT:
DATE PLOTTED: 10/14/2014 8:45:09 PM
FILE NAME: p912013-sht-details-023-tc21.dgn
PLOT DRIVER: pdf.pltr
PEN TABLE: standard-trans.tbl

FILE NAME = c:\pw_work\PWIDOT\DRIVAKOSGN\d0103115\tc21.dgn	USER NAME = drivakosgn	DESIGNED -	REVISED - 10-18-02
		DRAWN -	REVISED - R. BORO 09-14-09
	PLOT SCALE = 49.9999 ' / IN.	CHECKED -	REVISED -
	PLOT DATE = 9/14/2009	DATE -	REVISED -

STATE OF ILLINOIS
DEPARTMENT OF TRANSPORTATION

DETOUR SIGNING
FOR CLOSING STATE HIGHWAYS

SCALE: N.T.S. | SHEET NO. OF SHEETS | STA. TO STA.

F.A.P. RTE.	SECTION	COUNTY	TOTAL SHEETS	SHEET NO.
573	30-N(13)	KANE	219	164
	TC-21	CONTRACT NO. 60X70		
FED. ROAD DIST. NO.	ILLINOIS	FED. AID PROJECT		

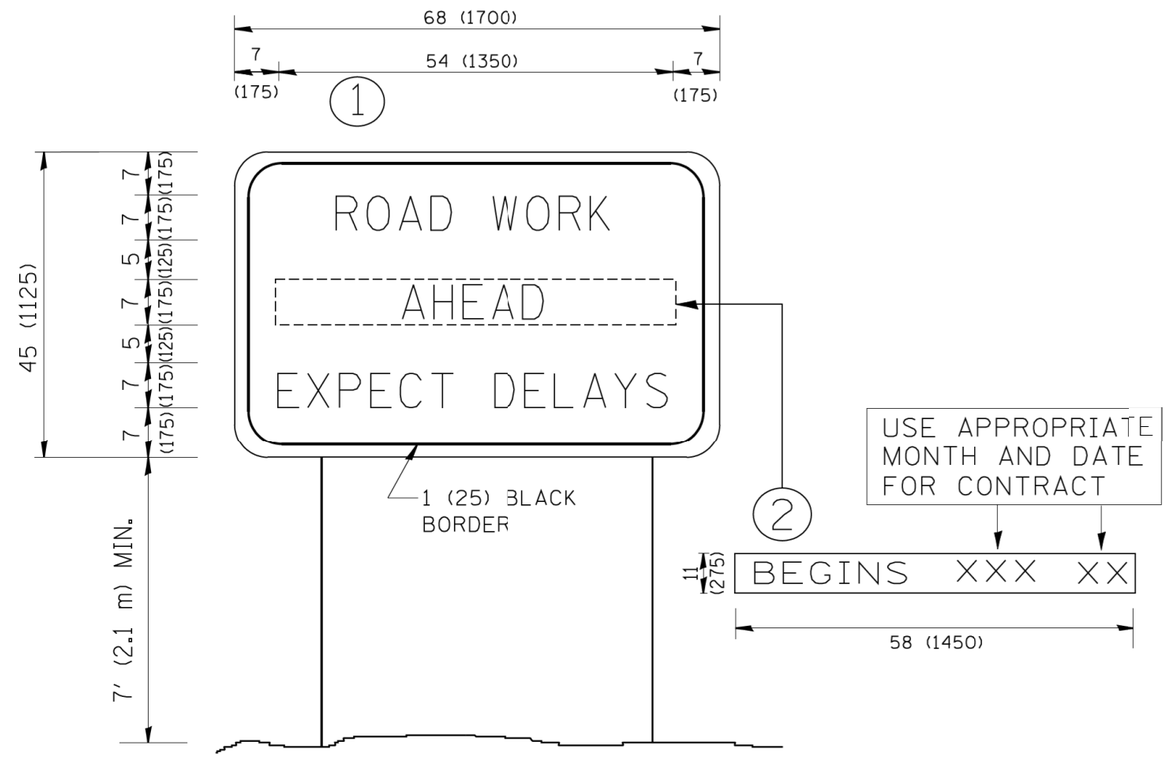

NOTES:

1. USE BLACK LETTERING ON ORANGE BACKGROUND.
2. ERECT SIGNS IN ADVANCE OF THE LOCATION FOR THE "ROAD CONSTRUCTION AHEAD" SIGN AT LOCATIONS AS DIRECTED BY THE ENGINEER.
3. ERECT SIGN 1 WITH INSTALLED PANEL 2 ONE WEEK PRIOR TO THE START OF CONSTRUCTION.
4. REMOVE PANEL 2 SOON AFTER THE START OF CONSTRUCTION.
5. SEE SPECIAL PROVISION FOR "TEMPORARY INFORMATION SIGNING" FOR ADDITIONAL INFORMATION.
6. ONE SIGN ASSEMBLY EQUALS 25.70 SQ. FT. (2.3 SQ. M.)
7. SHALL BE PAID FOR AS TEMPORARY INFORMATION SIGNING.

ALL DIMENSIONS ARE IN INCHES (MILLIMETERS) UNLESS OTHERWISE SHOWN.

COMPANY NAME:
PROJECT CONTACT:
CLIENT:
DATE PLOTTED: 10/14/2014 8:46:29 PM
FILE NAME: p912013-sh1-details-024-TC22.dgn
PLOT DRIVER: pdf.pltr
PEN TABLE: standard-trans.tbl

FILE NAME = Wi\diststd\22x34\tc22.dgn	USER NAME = gaglianobt	DESIGNED -	REVISED - R. MIRS 09-15-97	STATE OF ILLINOIS DEPARTMENT OF TRANSPORTATION	ARTERIAL ROAD INFORMATION SIGN
		DRAWN -	REVISED - R. MIRS 12-11-97		
	PLOT SCALE = 50.000 ' / IN.	CHECKED -	REVISED - T. RAMMACHER 02-02-99		
	PLOT DATE = 1/4/2008	DATE -	REVISED - C. JUCIUS 01-31-07		SCALE: N.T.S. SHEET NO. OF SHEETS STA. TO STA.

F.A.P. RTE.	SECTION	COUNTY	TOTAL SHEETS	SHEET NO.
573	30-N(13)	KANE	219	165
	TC-22	CONTRACT NO. 60X70		
FED. ROAD DIST. NO.	ILLINOIS	FED. AID PROJECT		

WITH INTERSECTION TRAFFIC SIGNALS

(SEE NOTE 1)

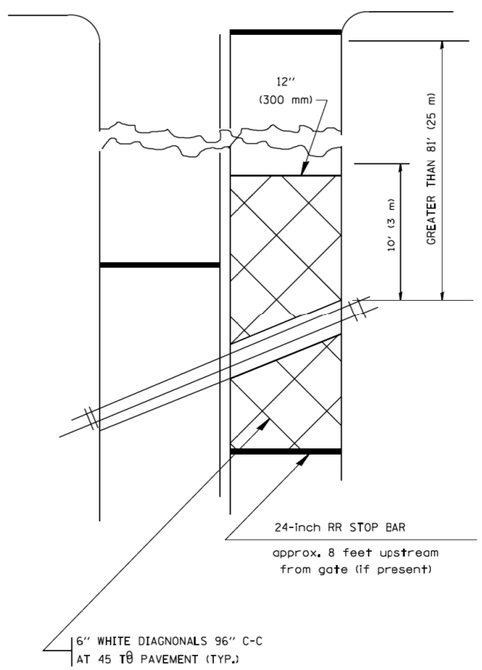

PLAN

N. T. S

WITH NEAR-SIDE TRAFFIC SIGNALS

(SEE NOTE 1 & 2)

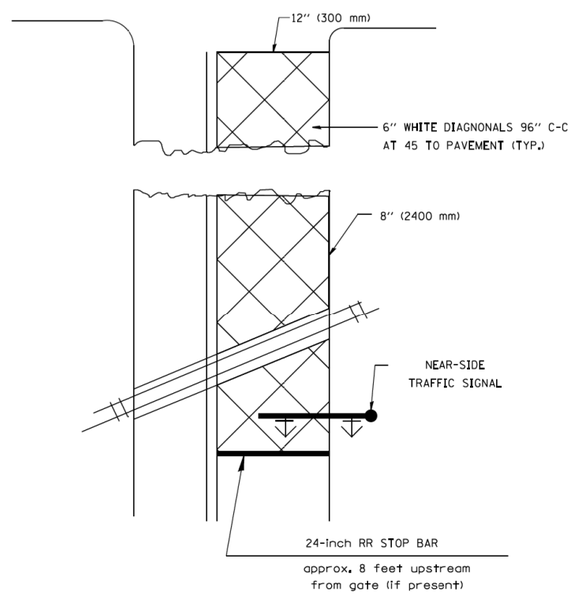

WITH NONSIGNALIZED INTERSECTION

81' (25 m) OR LESS TO CLOSEST RAIL

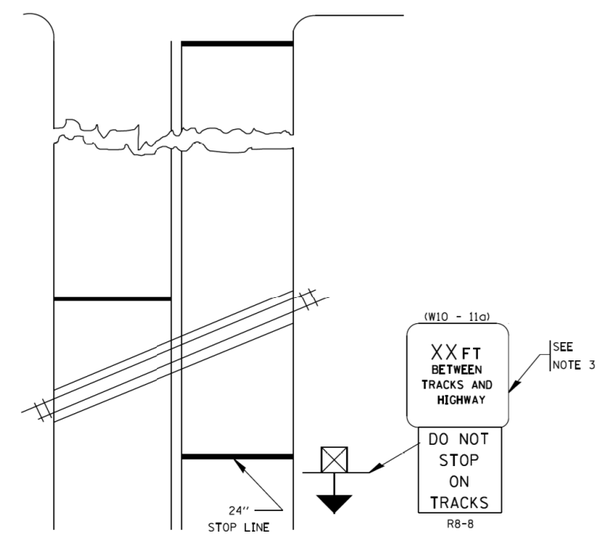

PLAN

N. T. S

NOTES:

1. PAVEMENT MARKINGS TO BE INSTALLED ON APPROACHES TO INTERSECTIONS CONTROLLED BY TRAFFIC SIGNALS WHICH ARE INTERCONNECTED WITH THE RAILROAD WARNING SIGNALS.

2. WHERE NEAR-SIDE TRAFFIC SIGNALS ARE USED, THE PAVEMENT MARKINGS EXTENDS TO THE INTERSECTION.

3. DISTANCE TO BE SHOWN ON SIGN MEASURED FROM A POINT 6 FEET (1.8 m) FROM THE RAIL CLOSEST TO THE INTERSECTION TO THE STOP LINE OR CROSSWALK, WHICHEVER IS CLOSEST, ROUNDED DOWN TO THE NEAREST 5 FEET (1.5 m). WHERE THERE IS NO STOP LINE, MEASURE TO POINT WHERE THE DRIVER HAS A VIEW OF APPROACHING TRAFFIC.
THE CLEARANCE SIGN IS ALSO TO BE USED AS AN INTERIM MEASURE AT LOCATIONS WITH INTERCONNECTED INTERSECTION TRAFFIC SIGNALS WHERE IT IS PLANNED TO CHANGE THEM TO NEAR-SIDE SIGNALS AT A FUTURE TIME. IN THIS CASE, THE DISTANCE TO BE SHOWN ON THE SIGN IS MEASURED FROM THE EDGE OF THE STRIPED-OUT AREA INSTEAD OF 6-FEET FROM THE RAIL. THE SIGN IS TO BE REMOVED WHEN THE NEAR-SIDE SIGNALS ARE INSTALLED AND THE PAVEMENT MARKINGS EXTEND TO THE INTERSECTION.

ALL DIMENSIONS ARE IN INCHES (MILLIMETERS)
UNLESS OTHERWISE SHOWN.

COMPANY NAME:
PROJECT CONTACT:
CLIENT:
DATE PLOTTED: 10/14/2014 8:47:07 PM
FILE NAME: p912013-sht-details-025-TC23.dgn
PLOT DRIVER: pdf.pltr
PEN TABLE: standard-trans.tbl

FILE NAME =	USER NAME = drivakosgn	DESIGNED -	REVISED - 02-25-11
		DRAWN -	REVISED - 04-26-12
	PLOT SCALE = 50.000 ' / in.	CHECKED -	REVISED -
	PLOT DATE = 5/7/2012	DATE -	REVISED -

STATE OF ILLINOIS
DEPARTMENT OF TRANSPORTATION

TYPICAL SUPPLEMENTAL SIGNING AND PAVEMENT MARKING
TREATMENT FOR RAILROAD CROSSINGS

SCALE: N.T.S. | SHEET NO. OF SHEETS | STA. TO STA.

F.A.P. RTE.	SECTION	COUNTY	TOTAL SHEETS	SHEET NO.
573	30-N(13)	KANE	219	166
	TC-23	CONTRACT NO. 60X70		

FED. ROAD DIST. NO. | ILLINOIS | FED. AID PROJECT

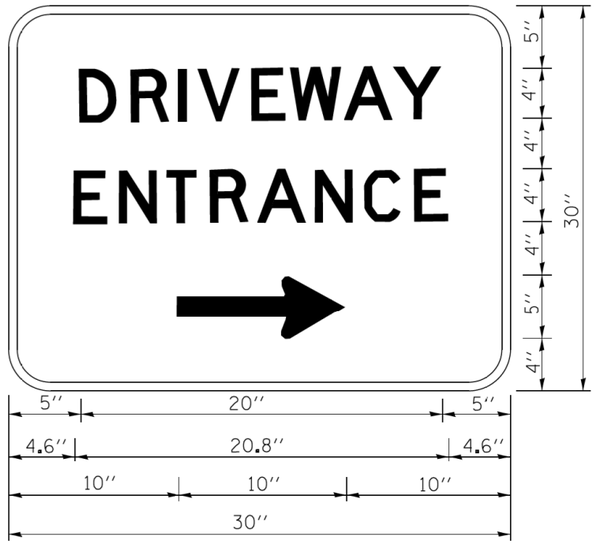

3.0'' RADIUS, 0.5'' BORDER, WHITE ON GREEN; REFLECTORIZED
''DRIVEWAY'' D; ''ENTRANCE'' D; STANDARD ARROW CUSTOM 12.0'' × 5.0''

NOTES:

1. HALF OF THE SIGNS WILL REQUIRE A LEFT HAND FACING ARROW.
2. TWO SIGNS SHALL BE USED AT EACH COMMERCIAL ENTRANCE PLACED BACK-TO-BACK: ONE WITH A RIGHT HAND ARROW (SHOWN) SHALL BE PLACED ON THE NEAR RIGHT SIDE THE DRIVEWAY AND ONE WITH A LEFT HAND ARROW SHALL BE PLACED ON THE FAR LEFT SIDE OF THE DRIVEWAY.
3. SIGNS TO BE PAID FOR AS ITEM ''TEMPORARY INFORMATION SIGNING''.

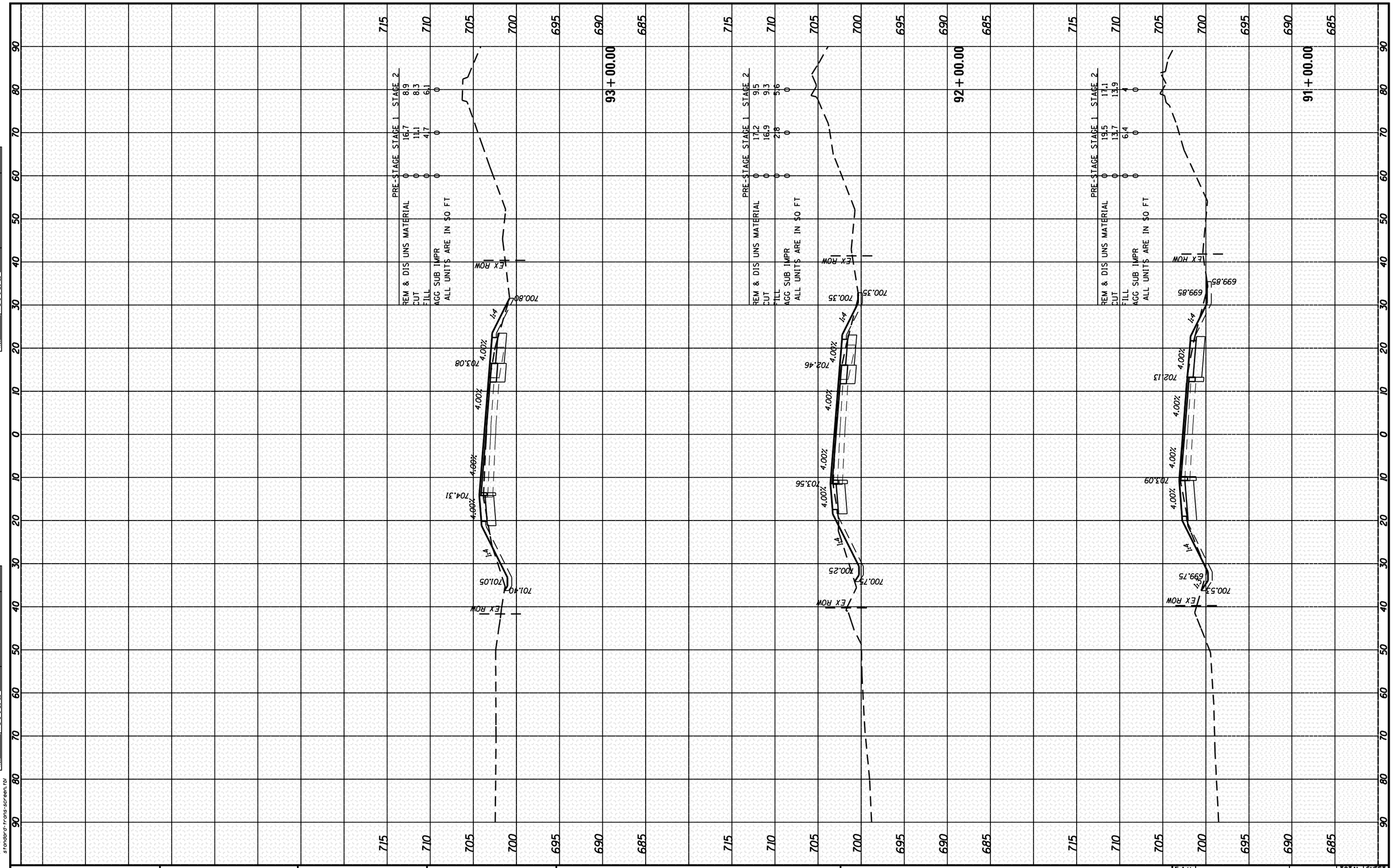

FINAL SURVEY	BY	DATE
SURVEYED		
PLOTTED		
TEMPLATE		
AREAS		
AREAS CHECKED		
NOTE BOOK NO.		

ORIGINAL SURVEY	BY	DATE
SURVEYED		
PLOTTED		
TEMPLATE		
AREAS		
AREAS CHECKED		
NOTE BOOK NO.		

COMPANY NAME: HRGreen
PROJECT CONTACT: Mike Ellis
DATE PLOTTED: 10/17/2014 h2&12 PM
FILE NAME: P9120113-sht-xsc-US30.dgn
PLOT DRIVER: pdf.pltr
PEN TABLE: standard-trans-screen.tbl

HRGreen.com
Illinois Professional Design Firm
184-001322

USER NAME = dstencz	DESIGNED - JRM	REVISED -
FILE NAME = P9120113-sht-xsc-US30.dgn	DRAWN - DS	REVISED -
PLOT SCALE = 1"=10'	CHECKED - TH	REVISED -
PLOT DATE = 10/17/2014	DATE - 10/17/14	REVISED -

STATE OF ILLINOIS
DEPARTMENT OF TRANSPORTATION

CROSS SECTIONS
US ROUTE 30

SCALE: 1"=10' | SHEET 1 OF 39 SHEETS | STA. 91+00.00 TO STA. 93+00.00

F.A.U. RTE.	SECTION	COUNTY	TOTAL SHEETS	SHEET NO.
573	30-N(13)	KANE	219	168

CONTRACT NO. 60X70

ILLINOIS FED. AID PROJECT

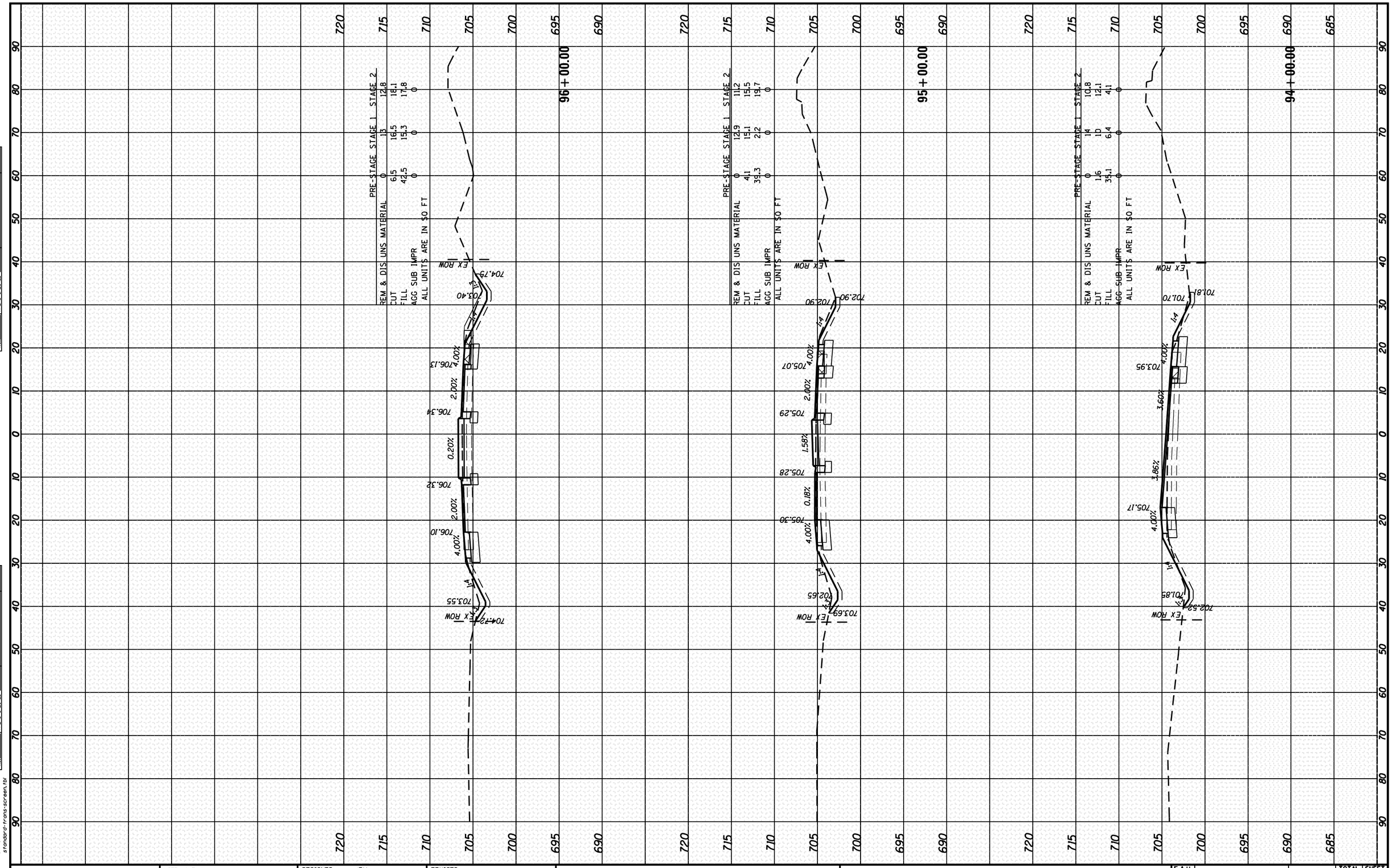

FINAL SURVEY	BY	DATE
SURVEYED		
PLOTTED		
TEMPLATE		
AREAS		
AREAS CHECKED		
NOTE BOOK		
NO.		

ORIGINAL SURVEY	BY	DATE
SURVEYED		
PLOTTED		
TEMPLATE		
AREAS		
AREAS CHECKED		
NOTE BOOK		
NO.		

COMPANY NAME:
PROJECT CONTACT:
CLIENT:
DATE PLOTTED: 10/17/2014 12:29:23 PM
FILE NAME: P9120113-sht-xsc-US30.dgn
PLOT DRIVER: pdf.plt
PEN TABLE: standard-trans-screen.tbl

HRGreen.com
Illinois Professional Design Firm
184-001322

USER NAME = dstancz	DESIGNED - JRM	REVISED -
FILE NAME = P9120113-sht-xsc-US30.dgn	DRAWN - DS	REVISED -
PLOT SCALE = 1"=10'	CHECKED - TH	REVISED -
PLOT DATE = 10/17/2014	DATE - 10/17/14	REVISED -

STATE OF ILLINOIS
DEPARTMENT OF TRANSPORTATION

CROSS SECTIONS
US ROUTE 30

SCALE: 1"=10' | SHEET 2 OF 39 SHEETS | STA. 94+00.00 TO STA. 96+00.00

F.A.U. RTE.	SECTION	COUNTY	TOTAL SHEETS	SHEET NO.
573	30-N(13)	KANE	219	169
		CONTRACT NO. 60X70		
		ILLINOIS FED. AID PROJECT		

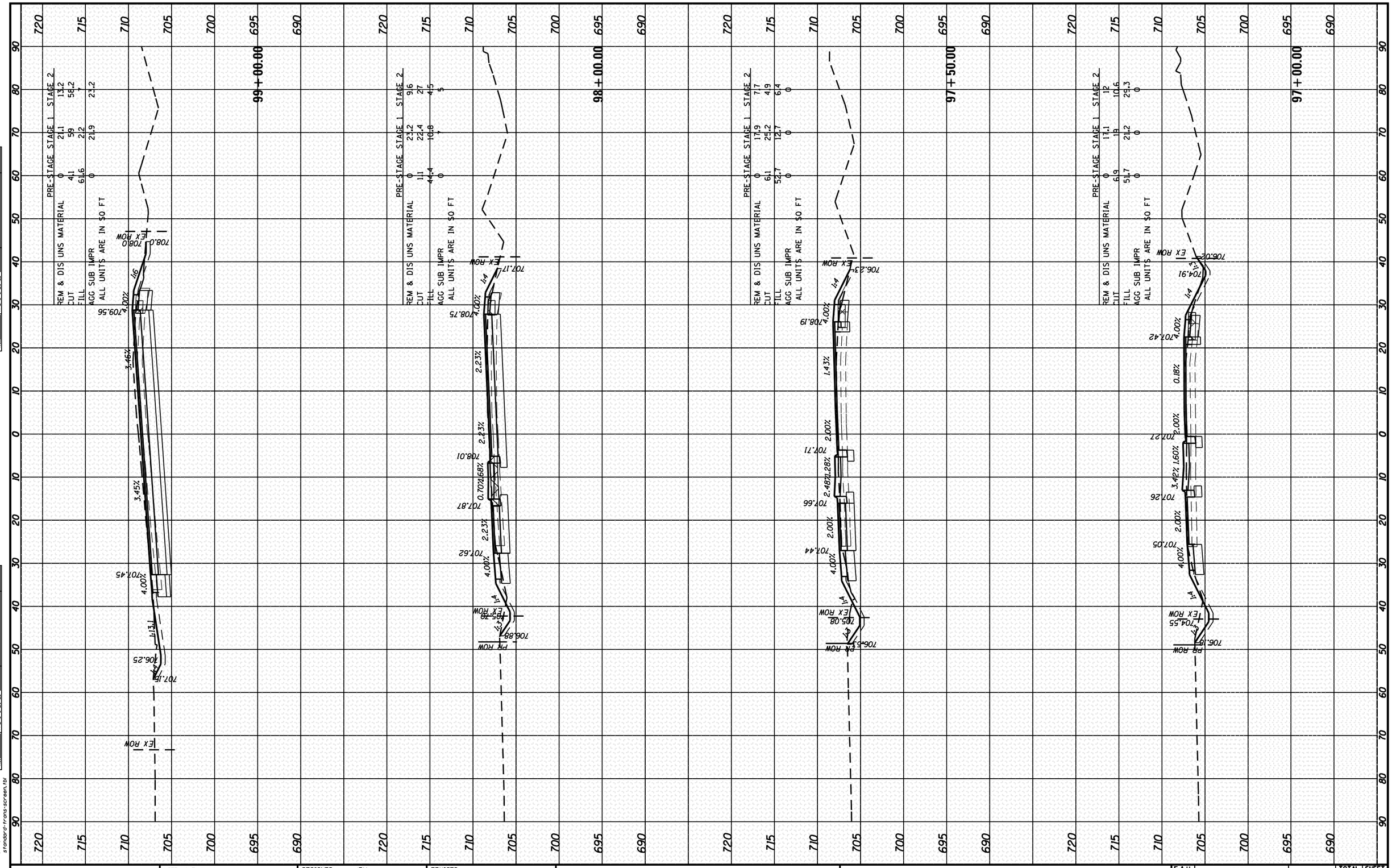

FINAL SURVEY	BY	DATE
SURVEYED		
PLOTTED		
TEMPLATE		
AREAS		
AREAS CHECKED		
NOTE BOOK		
NO.		

ORIGINAL SURVEY	BY	DATE
SURVEYED		
PLOTTED		
TEMPLATE		
AREAS		
AREAS CHECKED		
NOTE BOOK		
NO.		

COMPANY NAME:
PROJECT CONTACT:
DATE:
DATE PLOTTED: 10/17/2014 1:26:34 PM
FILE NAME: P9120113-sht-xsc-US30.dgn
PLOT DRIVER: pdf.plt
PEN TABLE: standard-trans-screen.tbl

HRGreen.com
Illinois Professional Design Firm
184-001322

USER NAME = dstencz	DESIGNED - JRM	REVISED -	
FILE NAME = P9120113-sht-xsc-US30.dgn	DRAWN - DS	REVISED -	
PLOT SCALE = 1"=10'	CHECKED - TH	REVISED -	
PLOT DATE = 10/17/2014	DATE - 10/17/14	REVISED -	

STATE OF ILLINOIS
DEPARTMENT OF TRANSPORTATION

CROSS SECTIONS
US ROUTE 30

SCALE: 1"=10' | SHEET 3 OF 39 SHEETS | STA. 97+00.00 TO STA. 99+00.00

F.A.U. RTE.	SECTION	COUNTY	TOTAL SHEETS	SHEET NO.
573	30-N(13)	KANE	219	170

CONTRACT NO. 60X70

ILLINOIS FED. AID PROJECT

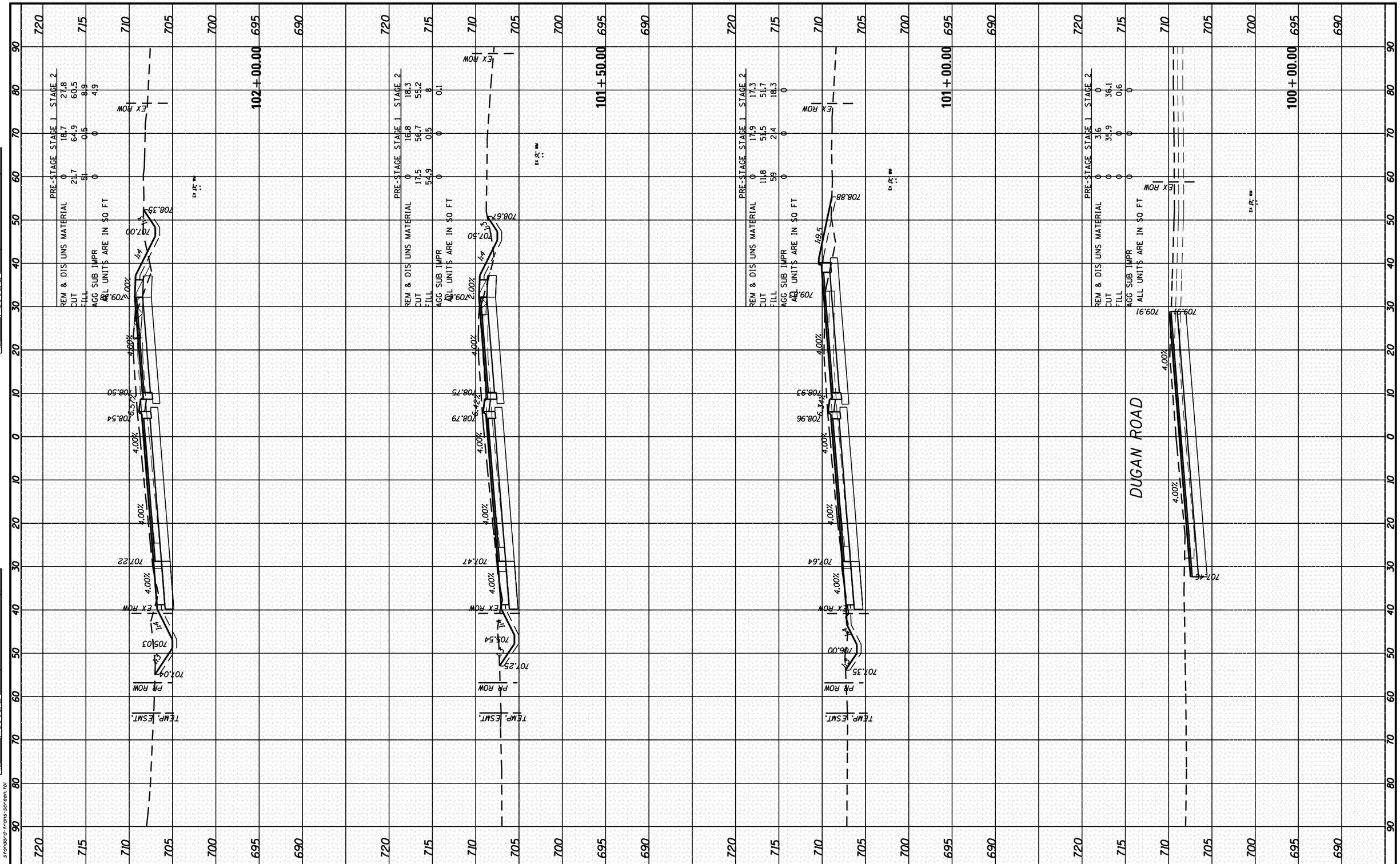

FINAL SURVEY	BY	DATE
SURVEYED		
PLOTTED		
TEMPLATE		
AREAS		
AREAS CHECKED		
NOTE BOOK		
NO.		

ORIGINAL SURVEY	BY	DATE
SURVEYED		
PLOTTED		
TEMPLATE		
AREAS		
AREAS CHECKED		
NOTE BOOK		
NO.		

COMPANY NAME:
PROJECT CONTACT:
COUNTY:
DATE PLOTTED: 10/17/2014 12:54:43 PM
FILE NAME: P9120113-sht-xsc-US30.dgn
PLOT DRIVER: pdf.pltr
PEN TABLE: standard-trans-screen.tbl

HRGreen.com
Illinois Professional Design Firm
184-001322

USER NAME = dstencz	DESIGNED - JRM	REVISED -
FILE NAME = P9120113-sht-xsc-US30.dgn	DRAWN - DS	REVISED -
PLOT SCALE = 1"=10'	CHECKED - TH	REVISED -
PLOT DATE = 10/17/2014	DATE - 10/17/14	REVISED -

STATE OF ILLINOIS
DEPARTMENT OF TRANSPORTATION

CROSS SECTIONS
US ROUTE 30

SCALE: 1"=10' | SHEET 4 OF 39 SHEETS | STA. 100+00.00 TO STA. 102+00.00

F.A.U. RTE.	SECTION	COUNTY	TOTAL SHEETS	SHEET NO.
573	30-N(13)	KANE	219	171

CONTRACT NO. 60X70

ILLINOIS FED. AID PROJECT

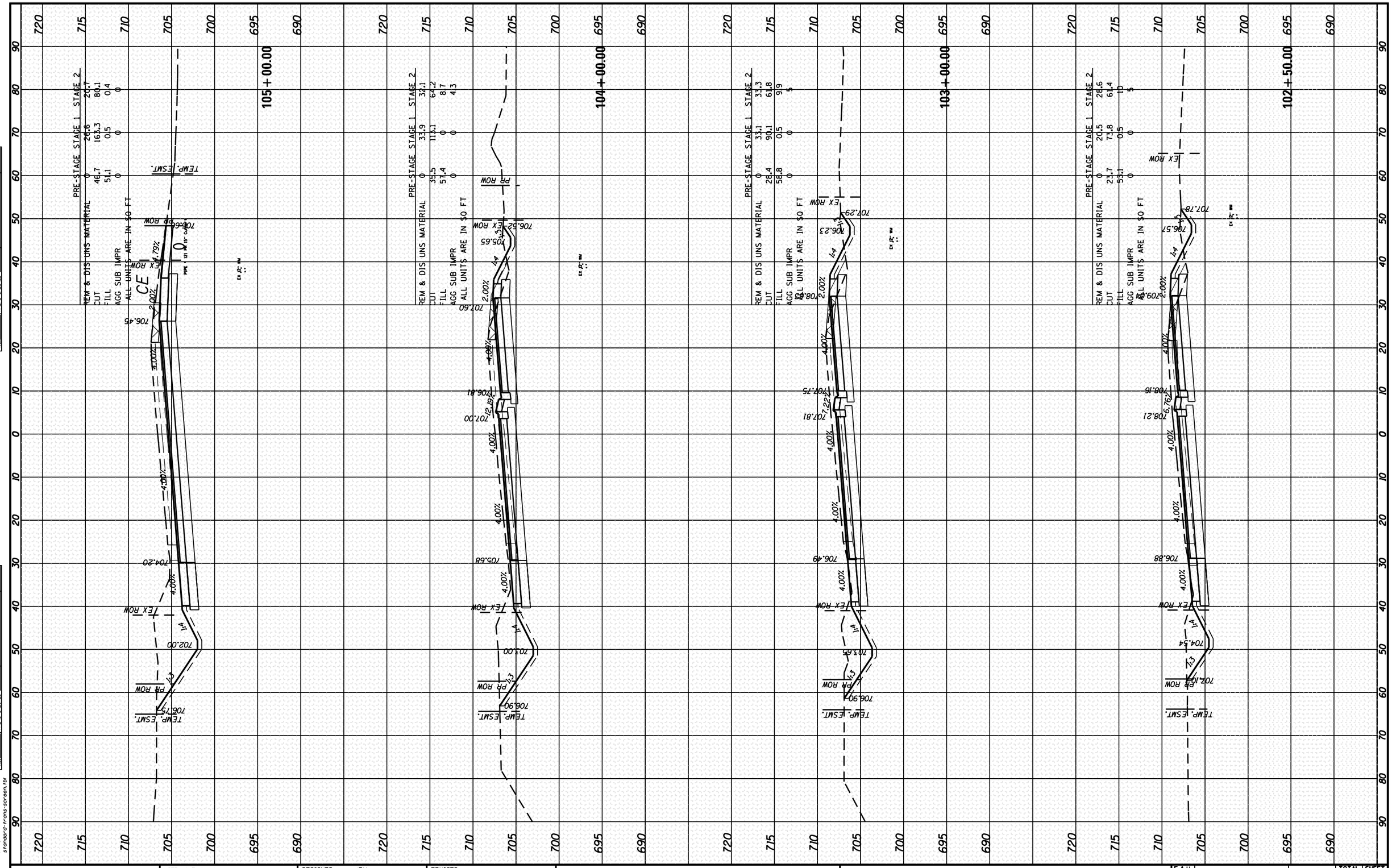

FINAL SURVEY	BY	DATE
SURVEYED		
PLOTTED		
TEMPLATE		
AREAS		
AREAS CHECKED		
NOTE BOOK NO.		

ORIGINAL SURVEY	BY	DATE
SURVEYED		
PLOTTED		
TEMPLATE		
AREAS		
AREAS CHECKED		
NOTE BOOK NO.		

COMPANY NAME:
PROJECT CONTACT:
CLIENT:
DATE PLOTTED: 10/17/2014 12:56:53 PM
FILE NAME: P9120113-sht-xsc-US30.dgn
PLOT DRIVER: pdf.plt
PEN TABLE: standard-trans-screen.tbl

HRGreen.com
Illinois Professional Design Firm
184-001322

USER NAME = dstancz	DESIGNED - JRM	REVISED -	
FILE NAME = P9120113-sht-xsc-US30.dgn	DRAWN - DS	REVISED -	
PLOT SCALE = 1"=10'	CHECKED - TH	REVISED -	
PLOT DATE = 10/17/2014	DATE - 10/17/14	REVISED -	

STATE OF ILLINOIS
DEPARTMENT OF TRANSPORTATION

CROSS SECTIONS
US ROUTE 30

SCALE: 1"=10' | SHEET 5 OF 39 SHEETS | STA. 102+50.00 TO STA. 105+00.00

F.A.U. RTE.	SECTION	COUNTY	TOTAL SHEETS	SHEET NO.
573	30-N(13)	KANE	219	172

CONTRACT NO. 60X70

ILLINOIS FED. AID PROJECT

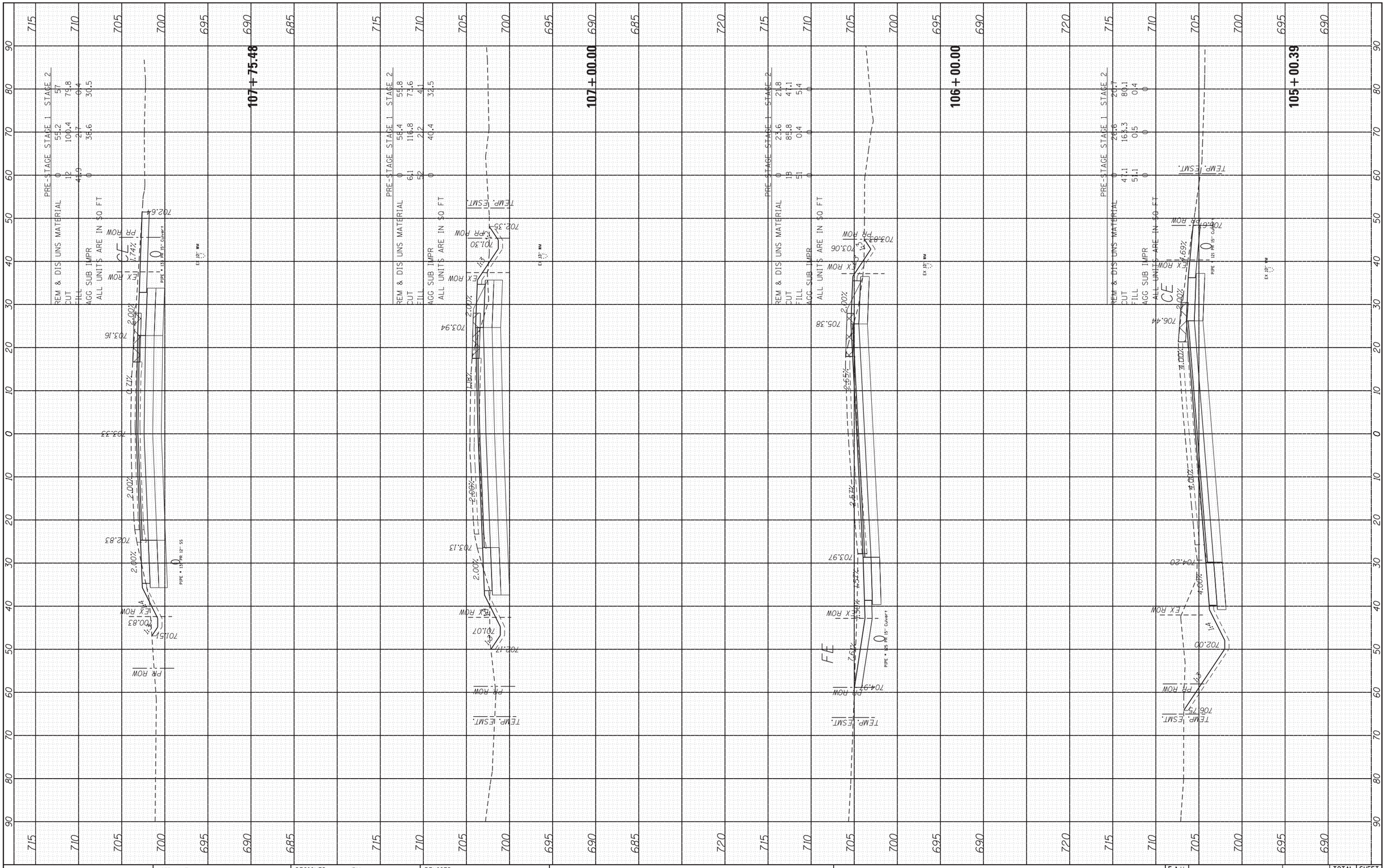

FINAL SURVEY	BY	DATE
SURVEYED		
PLOTTED		
TEMPLATE		
AREAS		
AREAS CHECKED		
NOTE BOOK		
NO.		

ORIGINAL SURVEY	BY	DATE
SURVEYED		
PLOTTED		
TEMPLATE		
AREAS		
AREAS CHECKED		
NOTE BOOK		
NO.		

COMPANY NAME:
PROJECT CONTACT:
PROJECT:
DATE PLOTTED: 10/15/2014 7:32:01 AM
FILE NAME: P9120113-sht-xsc-US30.dgn
PLOT DRIVER: pdf.pltr
PEN TABLE: standard-trans-screen.tbl

HRGreen.com
Illinois Professional Design Firm
184-001322

USER NAME = dstancz	DESIGNED - JRM	REVISED -	
FILE NAME = P9120113-sht-xsc-US30.dgn	DRAWN - DS	REVISED -	
PLOT SCALE = 1"=10'	CHECKED - TH	REVISED -	
PLOT DATE = 10/15/2014	DATE - 10/15/14	REVISED -	

STATE OF ILLINOIS
DEPARTMENT OF TRANSPORTATION

CROSS SECTIONS
US ROUTE 30

SCALE: 1"=10' | SHEET 6 OF 39 SHEETS | STA. 105+00.39 TO STA. 107+75.48

F.A.U. RTE.	SECTION	COUNTY	TOTAL SHEETS	SHEET NO.
573	30-N(13)	KANE	219	173

CONTRACT NO. 60X70

ILLINOIS FED. AID PROJECT

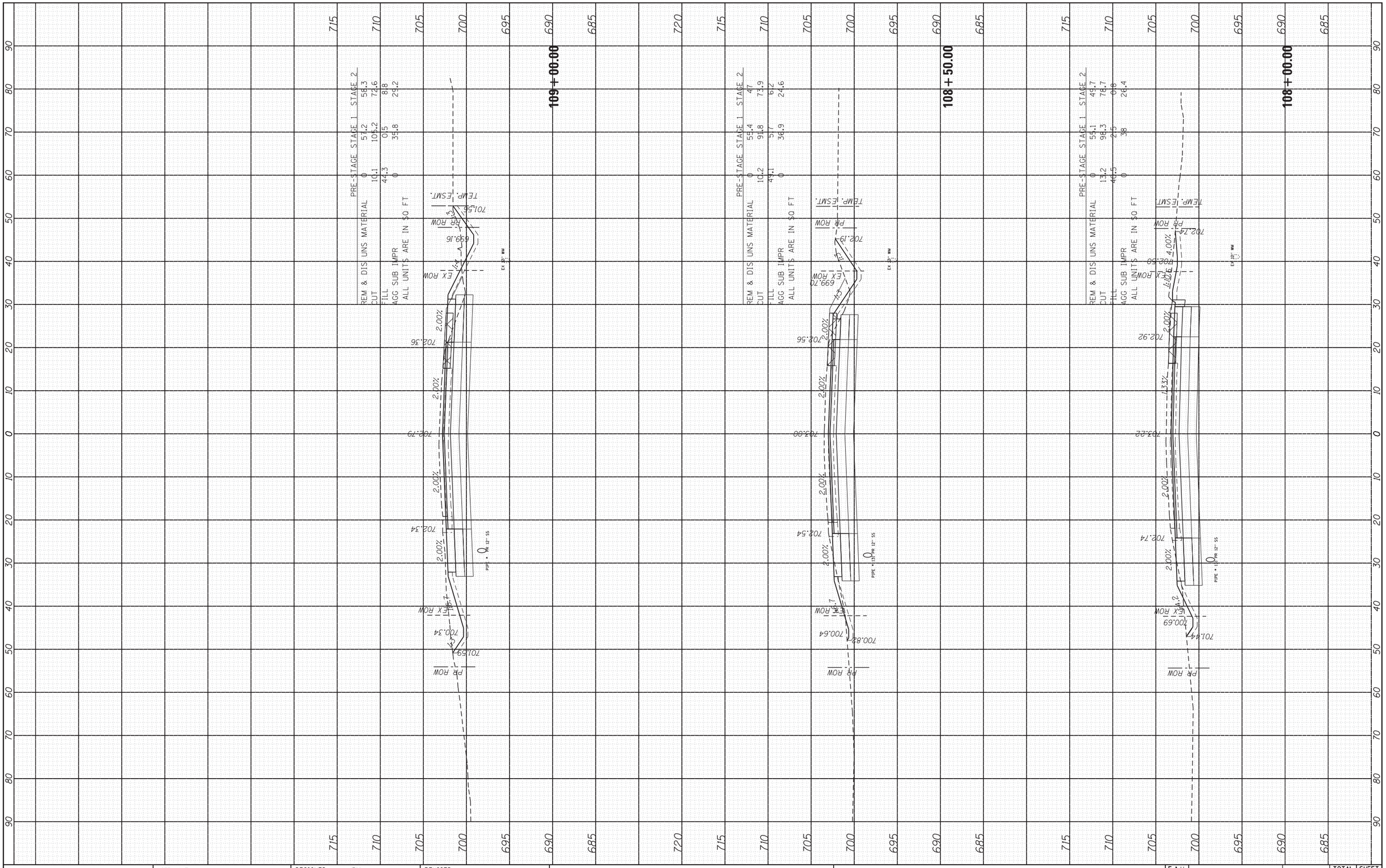

FINAL SURVEY		BY	DATE
NOTE BOOK	SURVEYED		
	PLOTTED		
	TEMPLATE		
	AREAS		
NO.	AREAS CHECKED		

ORIGINAL SURVEY		BY	DATE
NOTE BOOK	SURVEYED		
	PLOTTED		
	TEMPLATE		
	AREAS		
NO.	AREAS CHECKED		

COMPANY NAME:
PROJECT CONTACT:
DATE:
DATE PLOTTED: 10/15/2014 7:32:17 AM
FILE NAME: P9120113-sht-xsc-US30.dgn
PLOT DRIVER: pdf.pltr
PEN TABLE: standard-trans-screen.tbl

HRGreen.com
Illinois Professional Design Firm
184-001322

USER NAME = dstancz	DESIGNED - JRM	REVISED -
FILE NAME = P9120113-sht-xsc-US30.dgn	DRAWN - DS	REVISED -
PLOT SCALE = 1"=10'	CHECKED - TH	REVISED -
PLOT DATE = 10/15/2014	DATE - 10/15/14	REVISED -

STATE OF ILLINOIS
DEPARTMENT OF TRANSPORTATION

CROSS SECTIONS
US ROUTE 30

SCALE: 1"=10' | SHEET 7 OF 39 SHEETS | STA. 108+00.00 TO STA. 109+00.00

F.A.U. RTE.	SECTION	COUNTY	TOTAL SHEETS	SHEET NO.
573	30-N(13)	KANE	219	174

CONTRACT NO. 60X70

ILLINOIS FED. AID PROJECT

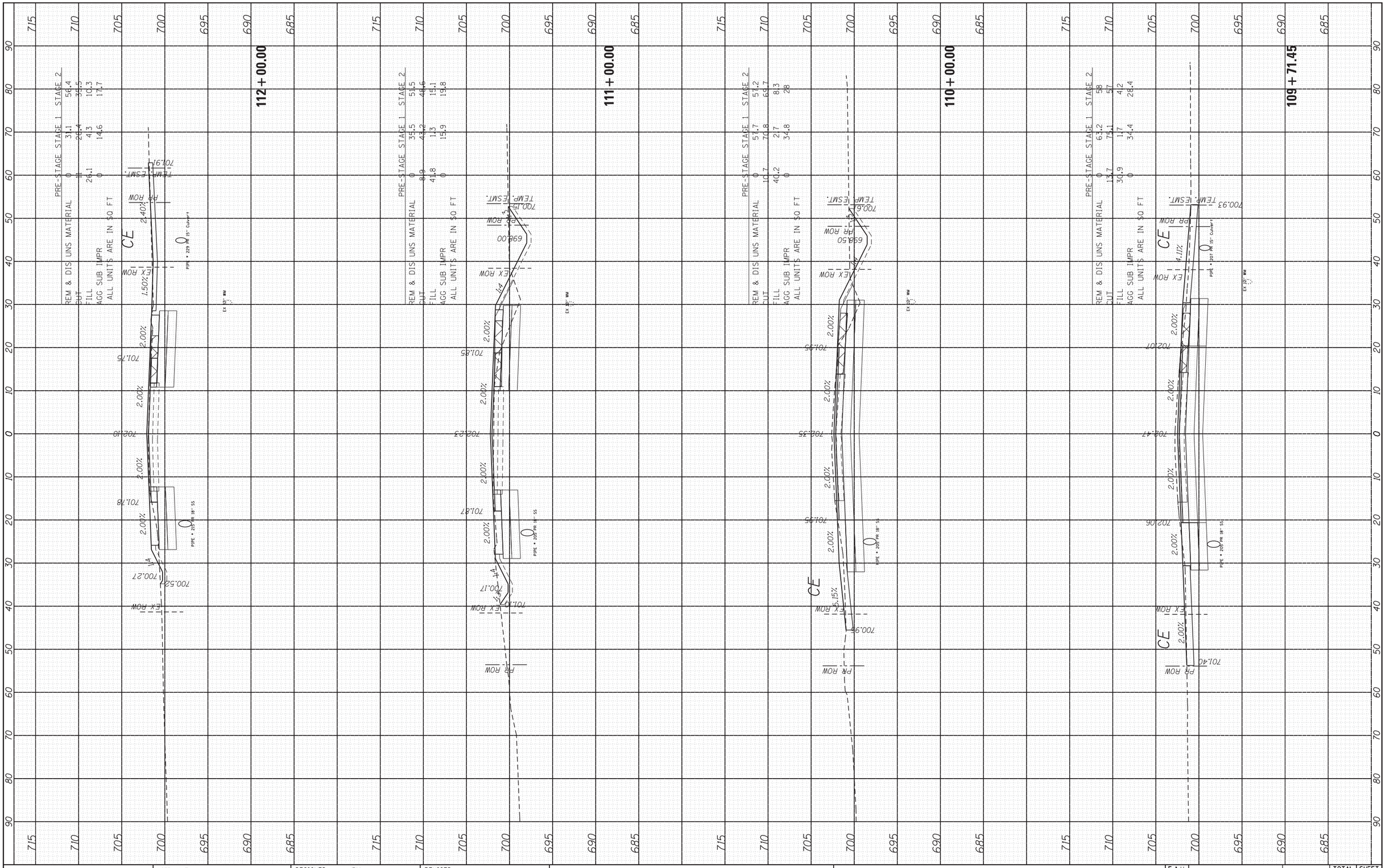

FINAL SURVEY		BY	DATE
NOTE BOOK	SURVEYED		
	PLOTTED		
	TEMPLATE		
	AREAS		
NO.	AREAS CHECKED		

ORIGINAL SURVEY		BY	DATE
NOTE BOOK	SURVEYED		
	PLOTTED		
	TEMPLATE		
	AREAS		
NO.	AREAS CHECKED		

COMPANY NAME:
PROJECT CONTACT:
DATE:
DATE PLOTTED: 10/15/2014 7:32:34 AM
FILE NAME: P9120113-sht-xsc-US30.dgn
PLOT DRIVER: pdf.pltr
PEN TABLE: standard-trans-screen.tbl

HRGreen.com
Illinois Professional Design Firm
184-001322

USER NAME = dstancz	DESIGNED - JRM	REVISED -
FILE NAME = P9120113-sht-xsc-US30.dgn	DRAWN - DS	REVISED -
PLOT SCALE = 1"=10'	CHECKED - TH	REVISED -
PLOT DATE = 10/15/2014	DATE - 10/15/14	REVISED -

STATE OF ILLINOIS
DEPARTMENT OF TRANSPORTATION

CROSS SECTIONS
US ROUTE 30

SCALE: 1"=10' | SHEET 8 OF 39 SHEETS | STA. 109+71.45 TO STA. 112+00.00

F.A.U. RTE.	SECTION	COUNTY	TOTAL SHEETS	SHEET NO.
573	30-N(13)	KANE	219	175

CONTRACT NO. 60X70

ILLINOIS FED. AID PROJECT

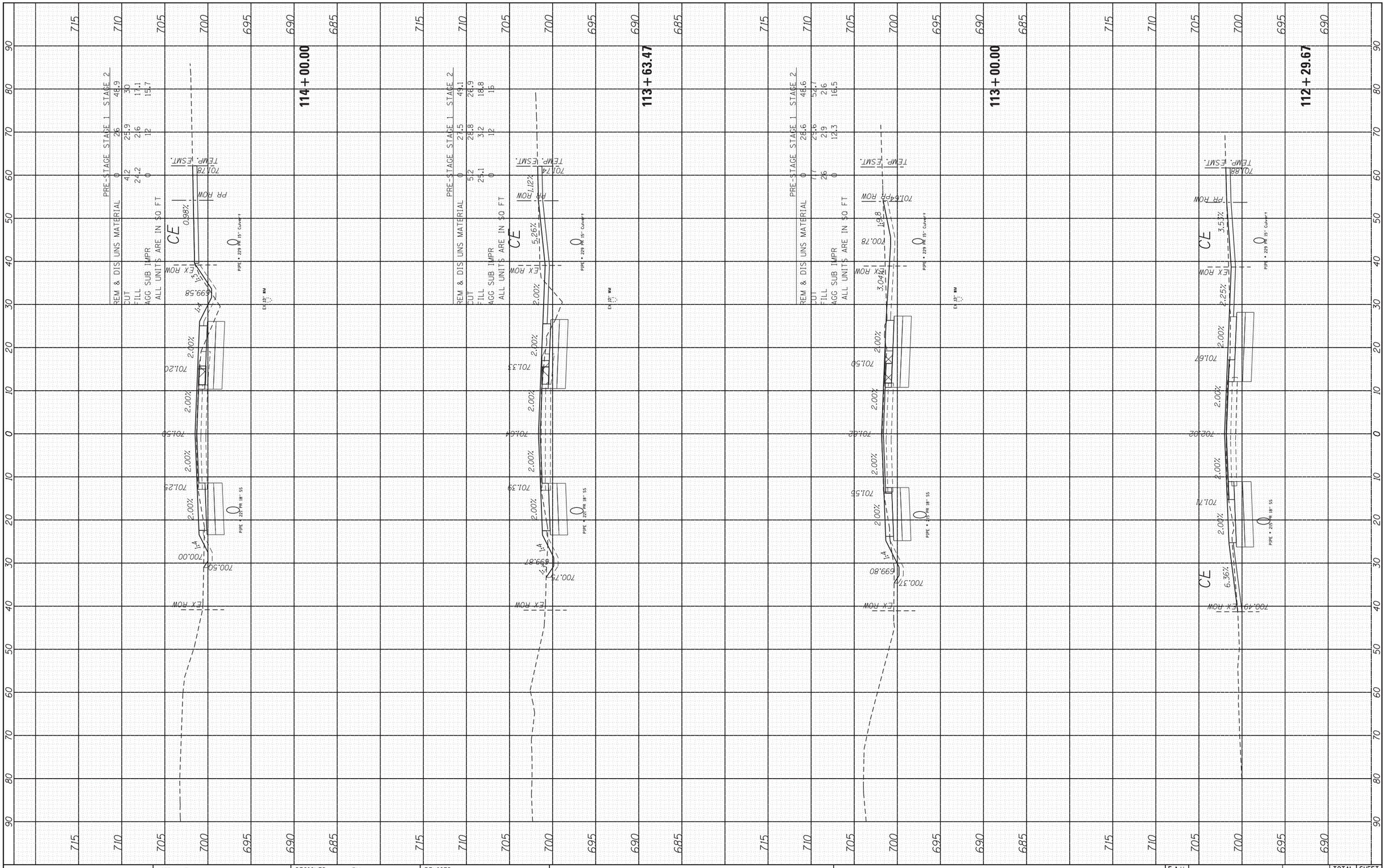

FINAL SURVEY		BY	DATE
NOTE BOOK NO.	SURVEYED		
	PLOTTED		
	TEMPLATE		
	AREAS		
	AREAS CHECKED		

ORIGINAL SURVEY		BY	DATE
NOTE BOOK NO.	SURVEYED		
	PLOTTED		
	TEMPLATE		
	AREAS		
	AREAS CHECKED		

COMPANY NAME:
PROJECT CONTACT:
PROJECT NO.:
DATE PLOTTED: 10/15/2014 7:32:50 AM
FILE NAME: P9120113-sht-xsc-US30.dgn
PLOT DRIVER: pdf.pltr
PEN TABLE: standard-trans-screen.tbl

HRGreen.com
Illinois Professional Design Firm
184-001322

USER NAME = dstoncz	DESIGNED - JRM	REVISED -
FILE NAME = P9120113-sht-xsc-US30.dgn	DRAWN - DS	REVISED -
PLOT SCALE = 1"=10'	CHECKED - TH	REVISED -
PLOT DATE = 10/15/2014	DATE - 10/15/14	REVISED -

STATE OF ILLINOIS
DEPARTMENT OF TRANSPORTATION

CROSS SECTIONS
US ROUTE 30

SCALE: 1"=10' | SHEET 9 OF 39 SHEETS | STA. 112+29.67 TO STA. 114+00.00

F.A.U. RTE.	SECTION	COUNTY	TOTAL SHEETS	SHEET NO.
573	30-N(13)	KANE	219	176

CONTRACT NO. 60X70

ILLINOIS FED. AID PROJECT

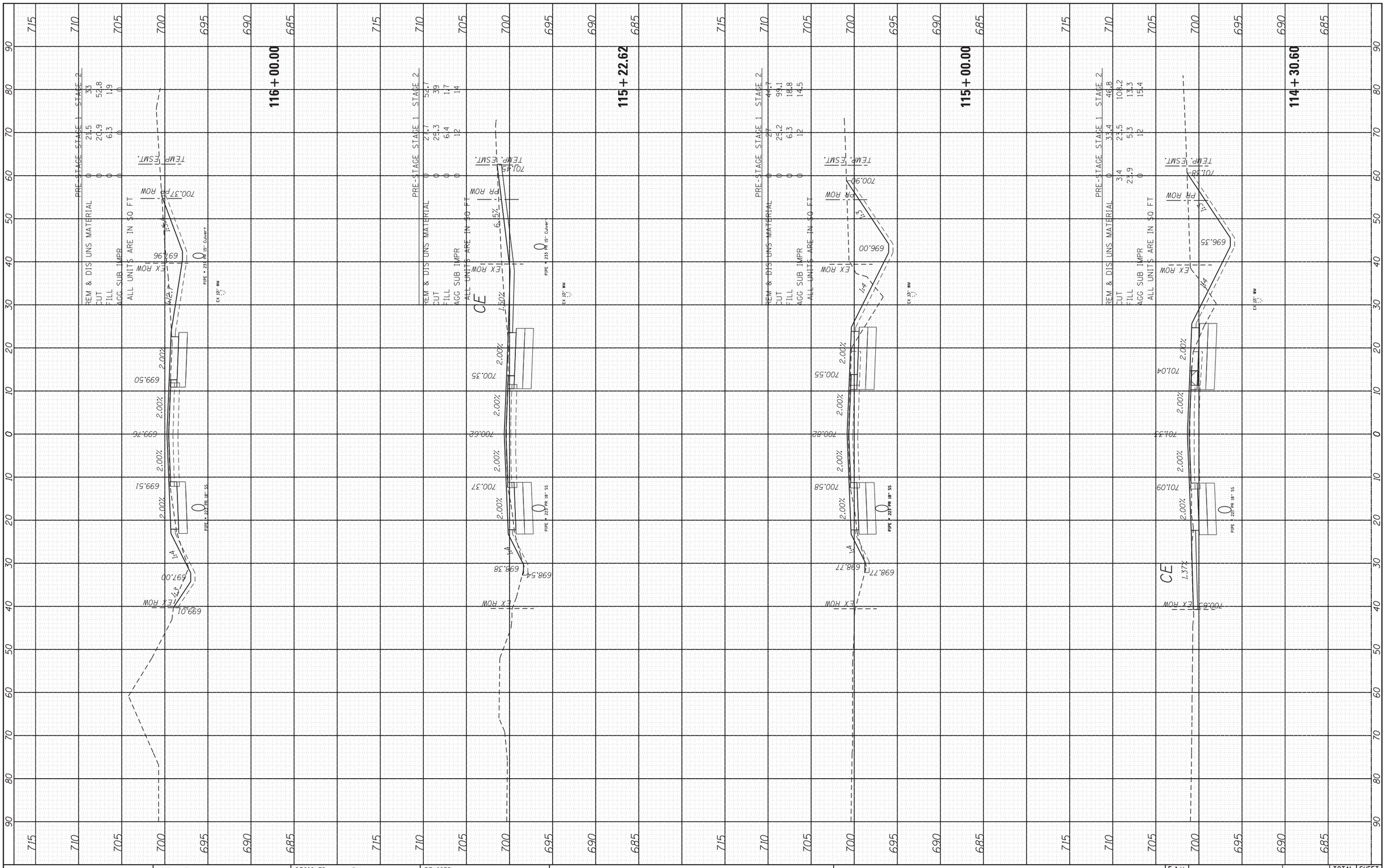

FINAL SURVEY	BY	DATE
SURVEYED		
PLOTTED		
TEMPLATE		
AREAS		
AREAS CHECKED		

NOTE BOOK NO.

ORIGINAL SURVEY	BY	DATE
SURVEYED		
PLOTTED		
TEMPLATE		
AREAS		
AREAS CHECKED		

NOTE BOOK NO.

COMPANY NAME:
PROJECT CONTACT:
CLIENT:
DATE PLOTTED: 10/15/2014 7:33:07 AM
FILE NAME: P9120113-sht-xsc-US30.dgn
PLOT DRIVER: pdf.plt
PEN TABLE: standard-trans-screen.tbl

HRGreen.com
Illinois Professional Design Firm
184-001322

USER NAME = dstancz	DESIGNED - JRM	REVISED -	
FILE NAME = P9120113-sht-xsc-US30.dgn	DRAWN - DS	REVISED -	
PLOT SCALE = 1"=10'	CHECKED - TH	REVISED -	
PLOT DATE = 10/15/2014	DATE - 10/15/14	REVISED -	

STATE OF ILLINOIS
DEPARTMENT OF TRANSPORTATION

CROSS SECTIONS
US ROUTE 30

SCALE: 1"=10' | SHEET 10 OF 39 SHEETS | STA. 114+30.60 TO STA. 116+00.00

F.A.U. RTE.	SECTION	COUNTY	TOTAL SHEETS	SHEET NO.
573	30-N(13)	KANE	219	177

CONTRACT NO. 60X70

ILLINOIS FED. AID PROJECT

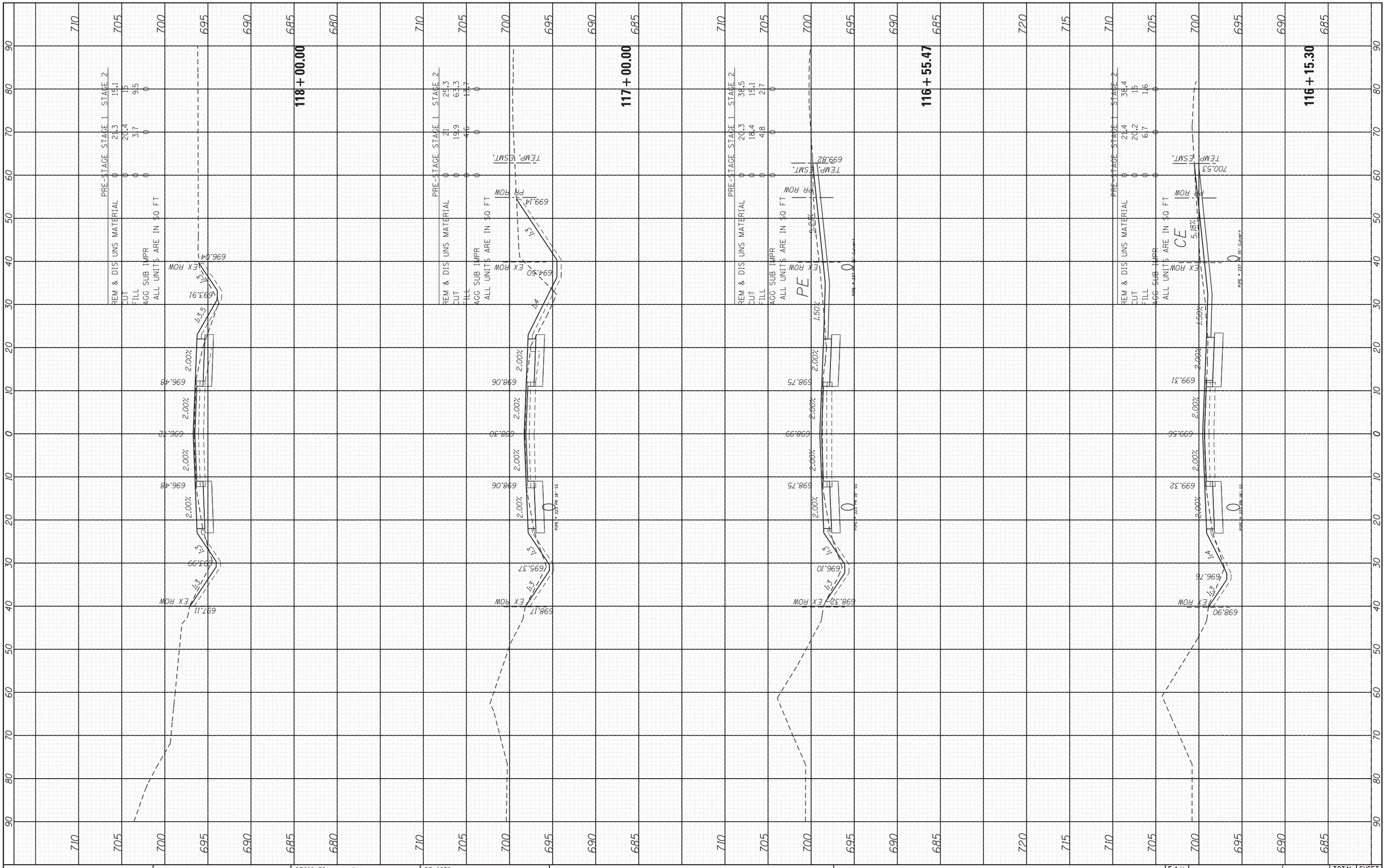

FINAL SURVEY	BY	DATE
SURVEYED		
PLOTTED		
TEMPLATE		
AREAS		
AREAS CHECKED		

NOTE BOOK NO.

ORIGINAL SURVEY	BY	DATE
SURVEYED		
PLOTTED		
TEMPLATE		
AREAS		
AREAS CHECKED		

NOTE BOOK NO.

COMPANY NAME:
PROJECT CONTACT:
CLIENT:
DATE PLOTTED: 10/15/2014 7:33:23 AM
FILE NAME: P9120113-sht-xsc-US30.dgn
PLOT DRIVER: pdf.plt
PEN TABLE: standard-tr-ms-screen.tbl

HRGreen.com
Illinois Professional Design Firm
184-001322

USER NAME = dstancz	DESIGNED - JRM	REVISED -	
FILE NAME = P9120113-sht-xsc-US30.dgn	DRAWN - DS	REVISED -	
PLOT SCALE = 1"=10'	CHECKED - TH	REVISED -	
PLOT DATE = 10/15/2014	DATE - 10/15/14	REVISED -	

STATE OF ILLINOIS
DEPARTMENT OF TRANSPORTATION

CROSS SECTIONS
US ROUTE 30

SCALE: 1"=10' | SHEET 11 OF 39 SHEETS | STA. 116+15.30 TO STA. 118+00.00

F.A.U. RTE.	SECTION	COUNTY	TOTAL SHEETS	SHEET NO.
573	30-N(13)	KANE	219	178

CONTRACT NO. 60X70

ILLINOIS FED. AID PROJECT

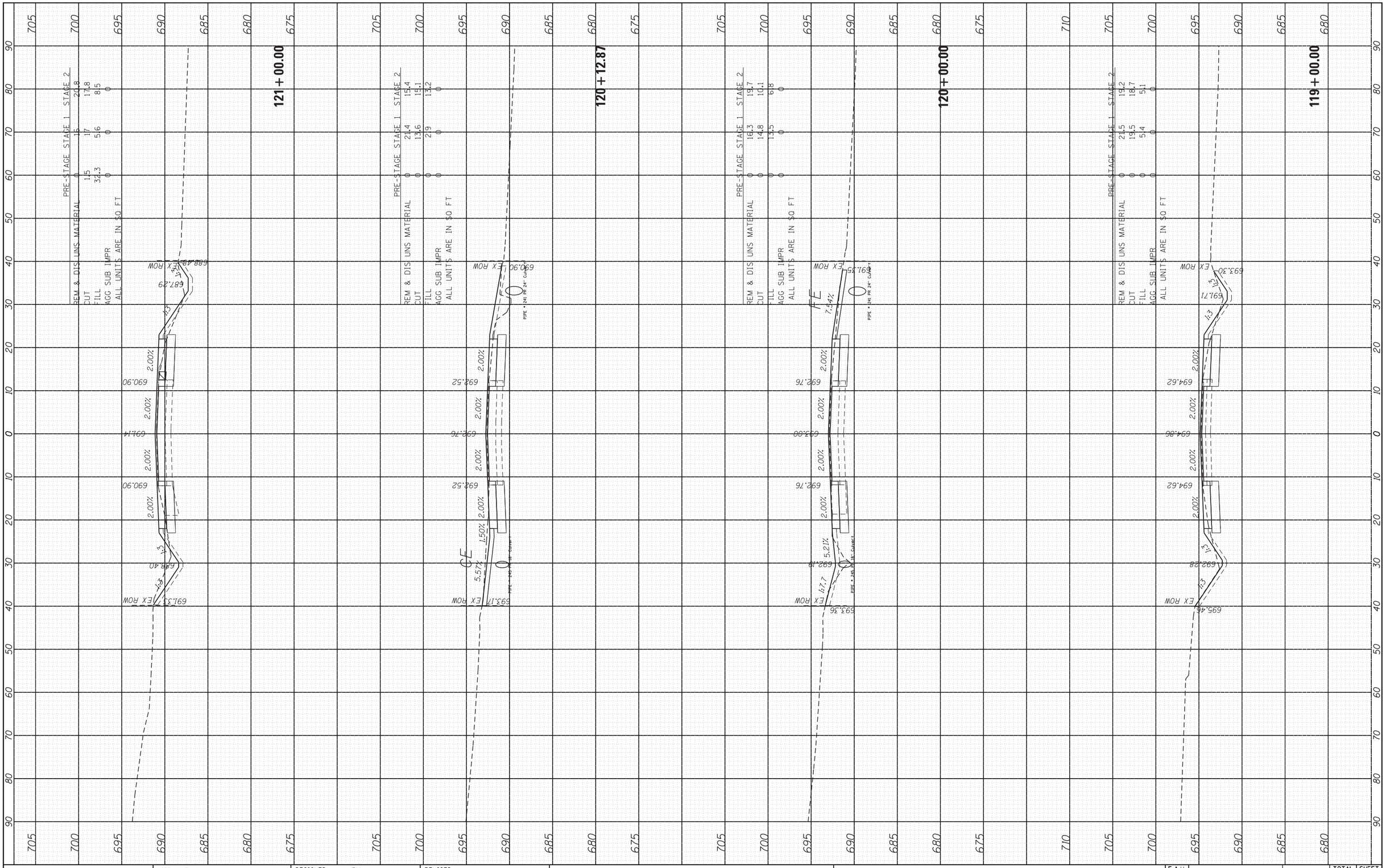

FINAL SURVEY	BY	DATE
SURVEYED		
PLOTTED		
TEMPLATE		
AREAS		
AREAS CHECKED		

NOTE BOOK
NO.

ORIGINAL SURVEY	BY	DATE
SURVEYED		
PLOTTED		
TEMPLATE		
AREAS		
AREAS CHECKED		

NOTE BOOK
NO.

COMPANY NAME:
PROJECT CONTACT:
CLIENT:
DATE PLOTTED: 10/15/2014 7:33:39 AM
FILE NAME: P9120113-sht-xsc-US30.dgn
PLOT DRIVER: pdf.plt
PEN TABLE: standard-trans-screen.tbl

HRGreen.com
Illinois Professional Design Firm
184-001322

USER NAME = dstancz	DESIGNED - JRM	REVISED -	
FILE NAME = P9120113-sht-xsc-US30.dgn	DRAWN - DS	REVISED -	
PLOT SCALE = 1"=10'	CHECKED - TH	REVISED -	
PLOT DATE = 10/15/2014	DATE - 10/15/14	REVISED -	

STATE OF ILLINOIS
DEPARTMENT OF TRANSPORTATION

CROSS SECTIONS
US ROUTE 30

SCALE: 1"=10' | SHEET 12 OF 39 SHEETS | STA. 119+00.00 TO STA. 121+00.00

F.A.U. RTE.	SECTION	COUNTY	TOTAL SHEETS	SHEET NO.
573	30-N(13)	KANE	219	179

CONTRACT NO. 60X70

ILLINOIS FED. AID PROJECT

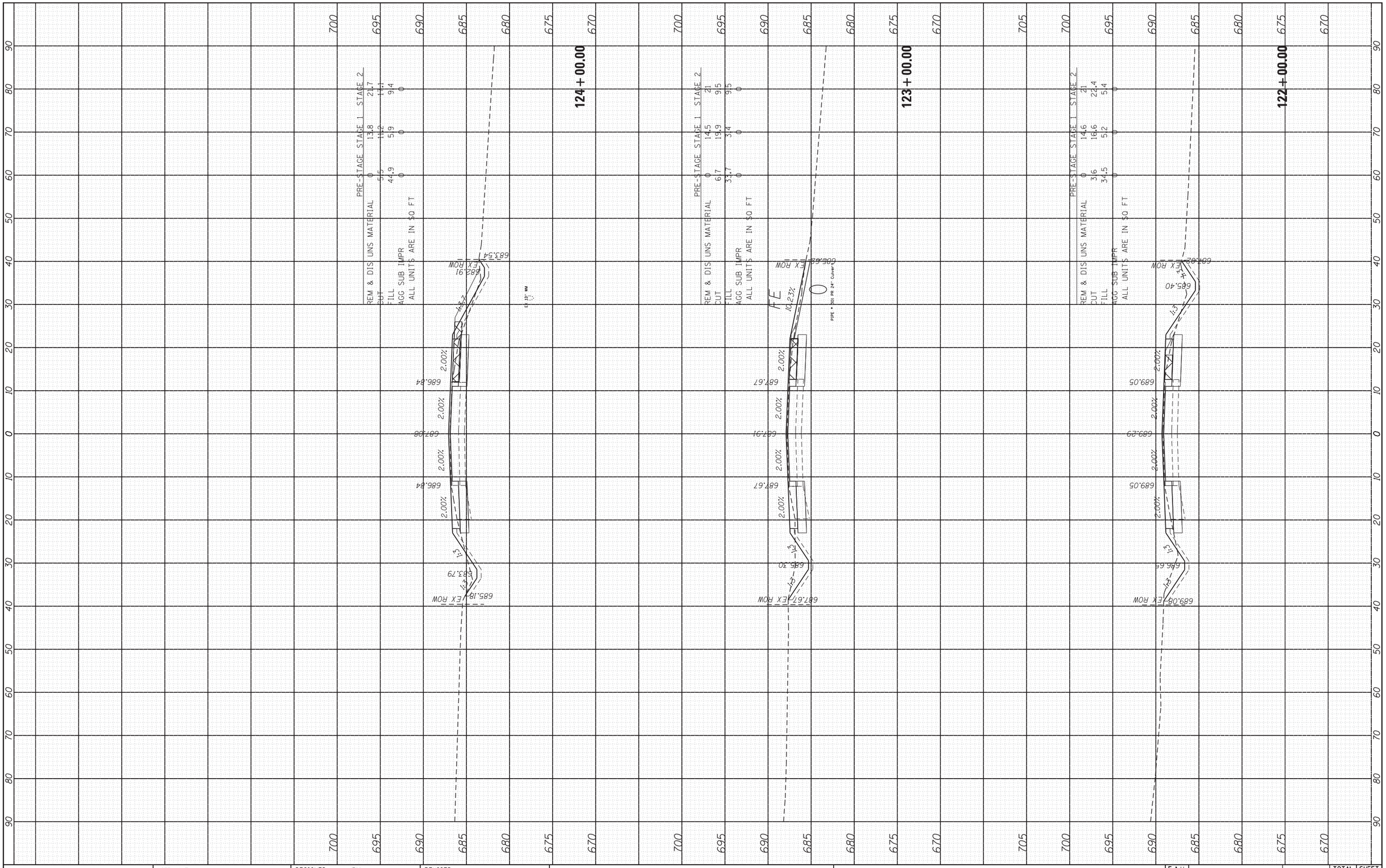

FINAL SURVEY	BY	DATE
SURVEYED		
PLOTTED		
TEMPLATE		
AREAS		
AREAS CHECKED		
NOTE BOOK		
NO.		

ORIGINAL SURVEY	BY	DATE
SURVEYED		
PLOTTED		
TEMPLATE		
AREAS		
AREAS CHECKED		
NOTE BOOK		
NO.		

COMPANY NAME:
PROJECT CONTACT:
CLIENT:
DATE PLOTTED: 10/15/2014 7:33:56 AM
FILE NAME: P9120113-sht-xsc-US30.dgn
PLOT DRIVER: pdf.plt
PEN TABLE: standard-trans-screen.tbl

HRGreen.com
Illinois Professional Design Firm
184-001322

USER NAME = dstancz	DESIGNED - JRM	REVISED -	
FILE NAME = P9120113-sht-xsc-US30.dgn	DRAWN - DS	REVISED -	
PLOT SCALE = 1"=10'	CHECKED - TH	REVISED -	
PLOT DATE = 10/15/2014	DATE - 10/15/14	REVISED -	

STATE OF ILLINOIS
DEPARTMENT OF TRANSPORTATION

CROSS SECTIONS
US ROUTE 30

SCALE: 1"=10' | SHEET 13 OF 39 SHEETS | STA. 122+00.00 TO STA. 124+00.00

F.A.U. RTE.	SECTION	COUNTY	TOTAL SHEETS	SHEET NO.
573	30-N(13)	KANE	219	180

CONTRACT NO. 60X70

ILLINOIS FED. AID PROJECT

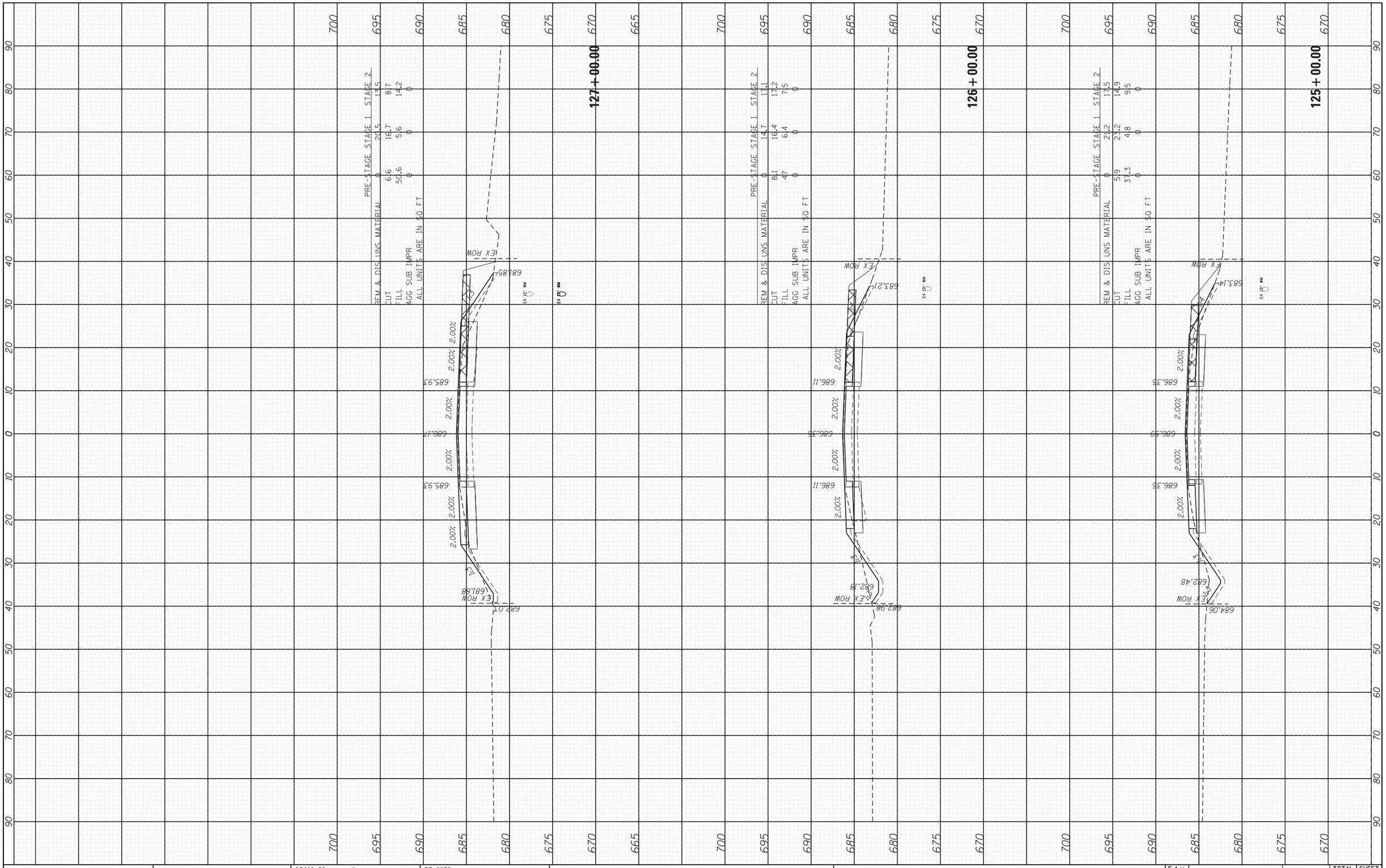

FINAL SURVEY	BY	DATE
SURVEYED		
PLOTTED		
TEMPLATE		
AREAS		
AREAS CHECKED		
NOTE BOOK		
NO.		

ORIGINAL SURVEY	BY	DATE
SURVEYED		
PLOTTED		
TEMPLATE		
AREAS		
AREAS CHECKED		
NOTE BOOK		
NO.		

COMPANY NAME:
PROJECT CONTACT:
CLIENT:
DATE PLOTTED: 10/15/2014 7:34:12 AM
FILE NAME: P9120113-sht-xsc-US30.dgn
PLOT DRIVER: pdf.plt
PEN TABLE: standard-trans-screen.tbl

HRGreen.com
Illinois Professional Design Firm
184-001322

USER NAME = dstancz	DESIGNED - JRM	REVISED -
FILE NAME = P9120113-sht-xsc-US30.dgn	DRAWN - DS	REVISED -
PLOT SCALE = 1"=10'	CHECKED - TH	REVISED -
PLOT DATE = 10/15/2014	DATE - 10/15/14	REVISED -

STATE OF ILLINOIS
DEPARTMENT OF TRANSPORTATION

CROSS SECTIONS
US ROUTE 30

SCALE: 1"=10' | SHEET 14 OF 39 SHEETS | STA. 125+00.00 TO STA. 127+00.00

F.A.U. RTE.	SECTION	COUNTY	TOTAL SHEETS	SHEET NO.
573	30-N(13)	KANE	219	181

CONTRACT NO. 60X70

ILLINOIS FED. AID PROJECT

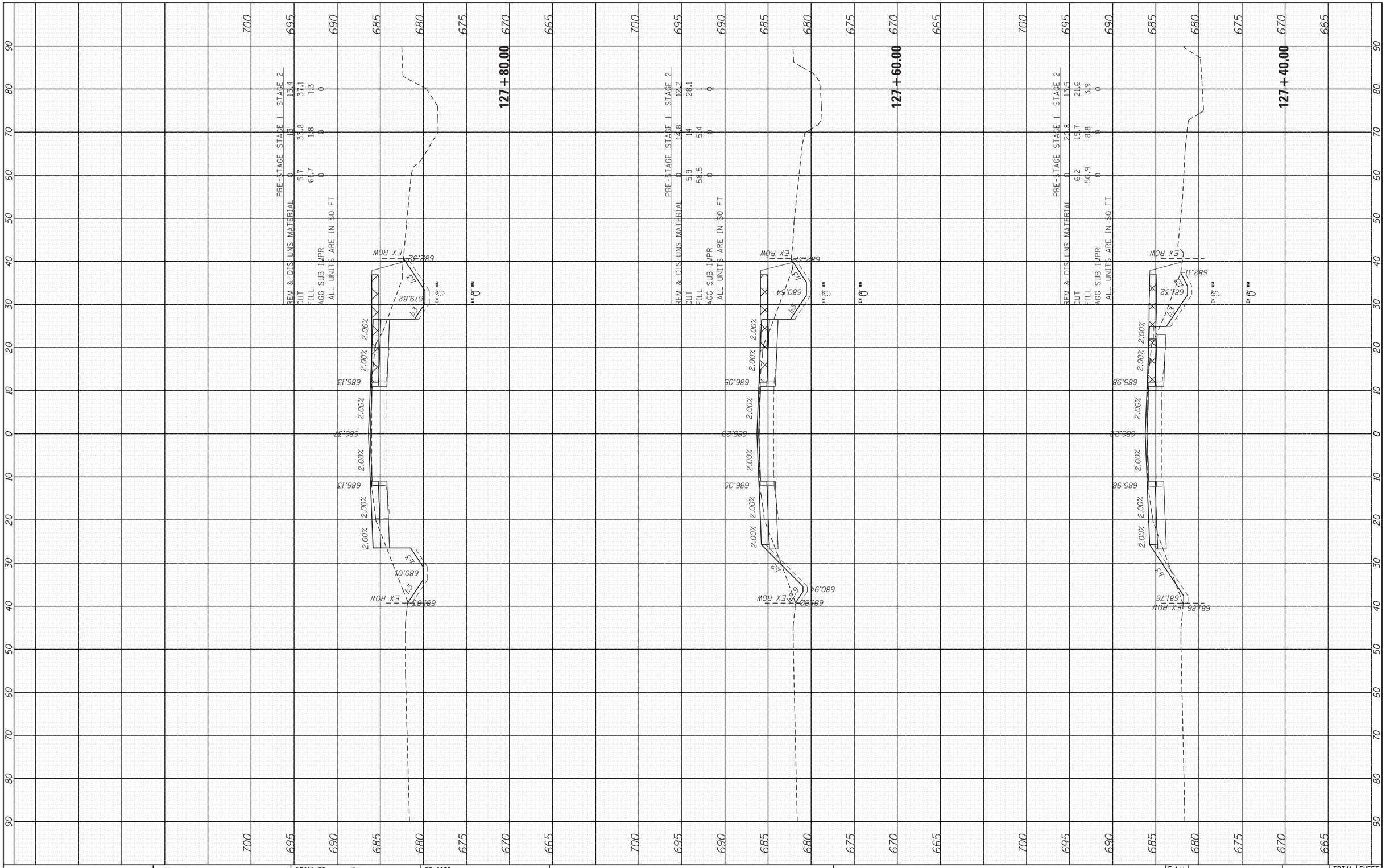

FINAL SURVEY		BY	DATE
NOTE BOOK	SURVEYED		
	PLOTTED		
	TEMPLATE		
	AREAS		
NO.	AREAS CHECKED		

ORIGINAL SURVEY		BY	DATE
NOTE BOOK	SURVEYED		
	PLOTTED		
	TEMPLATE		
	AREAS		
NO.	AREAS CHECKED		

COMPANY NAME:
PROJECT CONTACT:
DATE:
DATE PLOTTED: 10/15/2014 7:34:29 AM
FILE NAME: P9120113-sht-xsc-US30.dgn
PLOT DRIVER: pdf.pltr
PEN TABLE: standard-trans-screen.tbl

HRGreen.com
Illinois Professional Design Firm
184-001322

USER NAME = dstancz	DESIGNED - JRM	REVISED -
FILE NAME = P9120113-sht-xsc-US30.dgn	DRAWN - DS	REVISED -
PLOT SCALE = 1"=10'	CHECKED - TH	REVISED -
PLOT DATE = 10/15/2014	DATE - 10/15/14	REVISED -

STATE OF ILLINOIS
DEPARTMENT OF TRANSPORTATION

CROSS SECTIONS
US ROUTE 30

SCALE: 1"=10' | SHEET 15 OF 39 SHEETS | STA. 127+40.00 TO STA. 127+80.00

F.A.U. RTE.	SECTION	COUNTY	TOTAL SHEETS	SHEET NO.
573	30-N(13)	KANE	219	182

CONTRACT NO. 60X70

ILLINOIS FED. AID PROJECT

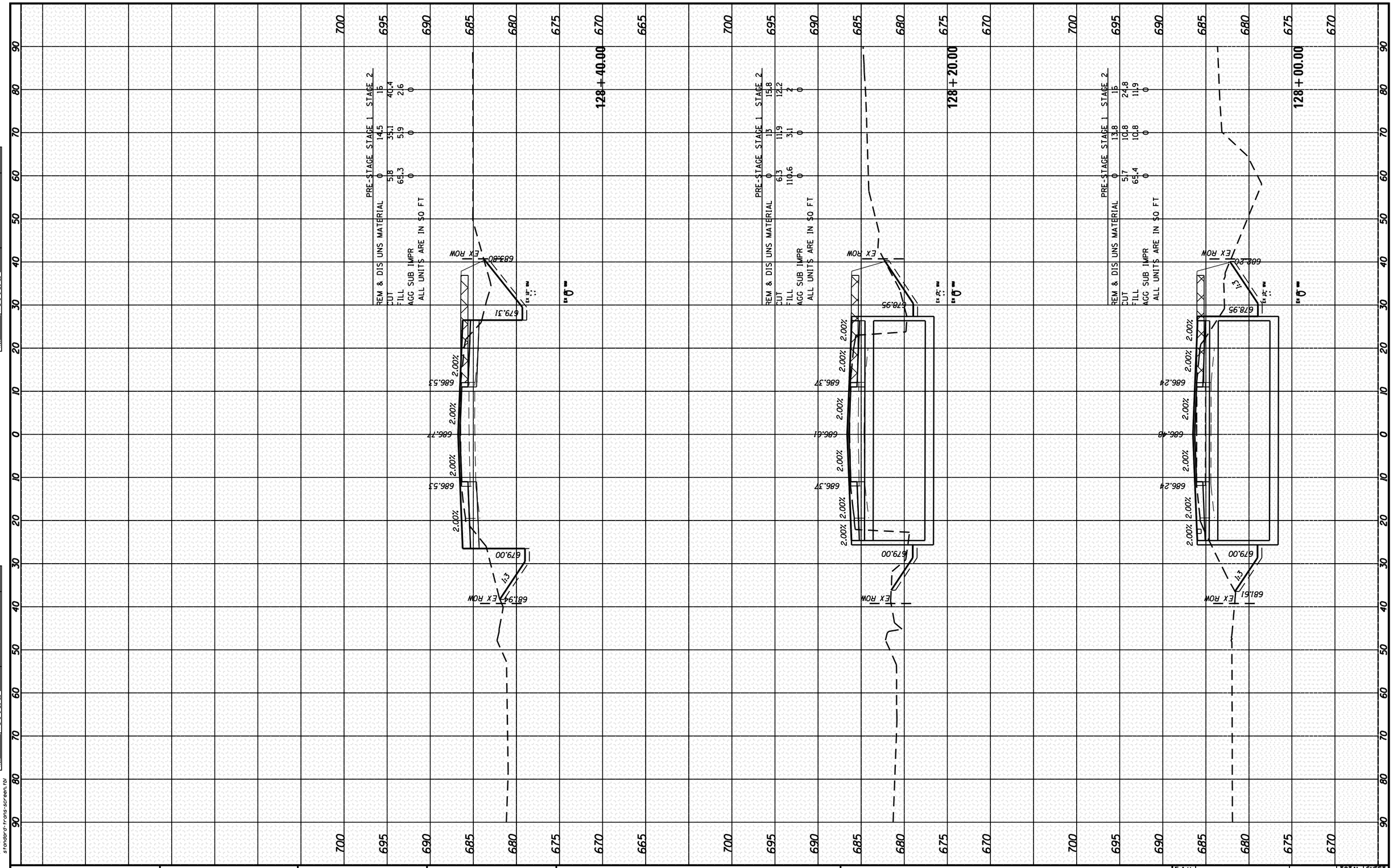

FINAL SURVEY	BY	DATE
SURVEYED		
PLOTTED		
TEMPLATE		
AREAS		
AREAS CHECKED		
NOTE BOOK NO.		

ORIGINAL SURVEY	BY	DATE
SURVEYED		
PLOTTED		
TEMPLATE		
AREAS		
AREAS CHECKED		
NOTE BOOK NO.		

COMPANY NAME:
PROJECT CONTACT:
CREATED:
DATE PLOTTED: 10/16/2014 8:31:42 AM
FILE NAME: P9120113-sht-xsc-US30.dgn
PLOT DRIVER: pdf.plt
PEN TABLE: standard-trans-screen.tbl

HRGreen.com
Illinois Professional Design Firm
184-001322

USER NAME = dstencz	DESIGNED - JRM	REVISED -
FILE NAME = P9120113-sht-xsc-US30.dgn	DRAWN - DS	REVISED -
PLOT SCALE = 1"=10'	CHECKED - TH	REVISED -
PLOT DATE = 10/16/2014	DATE - 10/16/14	REVISED -

STATE OF ILLINOIS
DEPARTMENT OF TRANSPORTATION

CROSS SECTIONS
US ROUTE 30

SCALE: 1"=10' | SHEET 16 OF 39 SHEETS | STA. 128+00.00 TO STA. 128+40.00

F.A.U. RTE.	SECTION	COUNTY	TOTAL SHEETS	SHEET NO.
573	30-N(13)	KANE	219	183

CONTRACT NO. 60X70

ILLINOIS FED. AID PROJECT

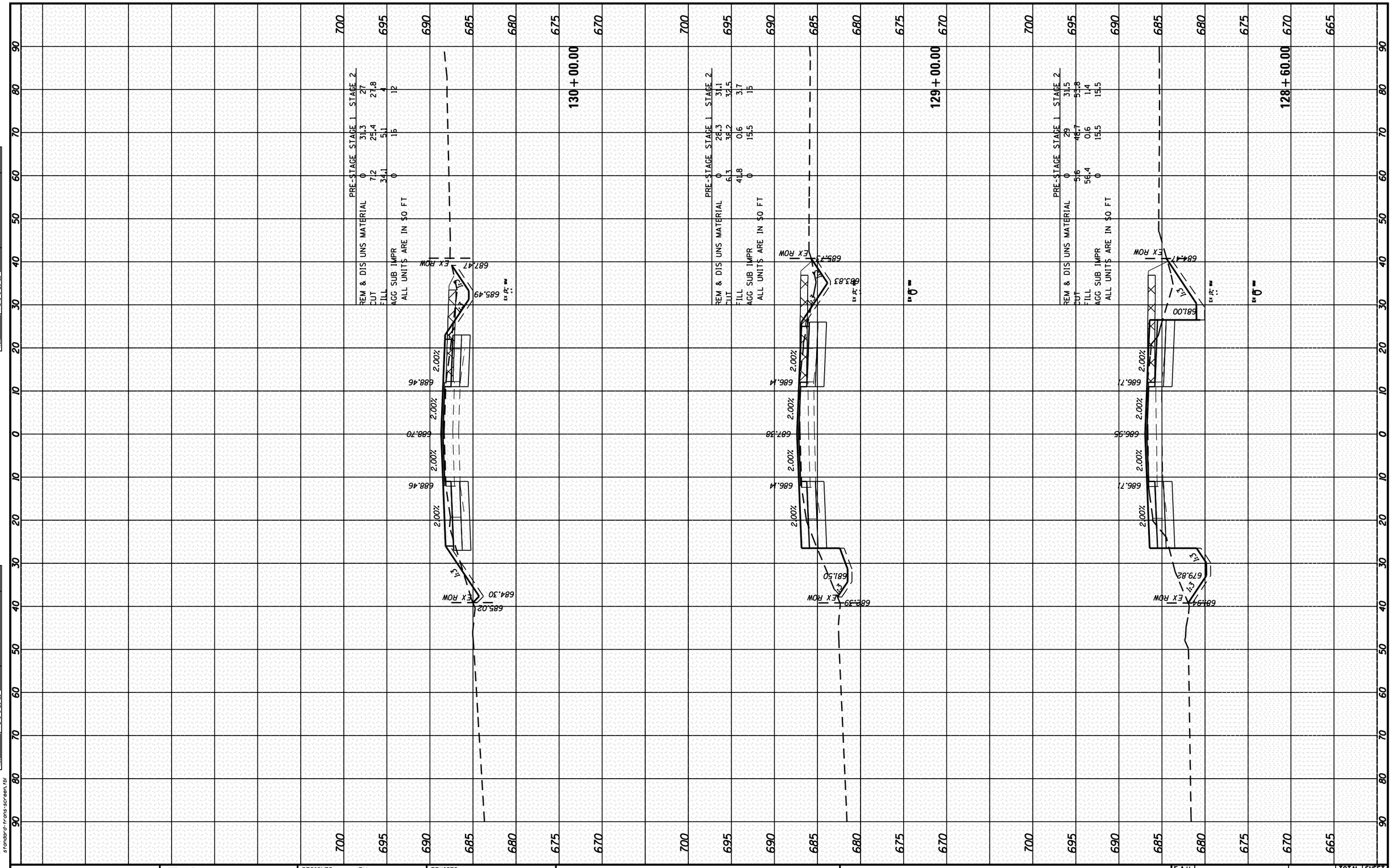

FINAL SURVEY		BY	DATE
NOTE BOOK	SURVEYED		
	PLOTTED		
	TEMPLATE		
	AREAS		
	AREAS CHECKED		
NO.			

ORIGINAL SURVEY		BY	DATE
NOTE BOOK	SURVEYED		
	PLOTTED		
	TEMPLATE		
	AREAS		
	AREAS CHECKED		
NO.			

COMPANY NAME:
PROJECT CONTACT:
CLIENT:
DATE PLOTTED: 10/16/2014 8:11:52 AM
FILE NAME: P9120113-sht-xsc-US30.dgn
PLOT DRIVER: pdf.plt
PEN TABLE: standard-trans-screen.tbl

HRGreen.com
Illinois Professional Design Firm
184-001322

USER NAME = dstancz	DESIGNED - JRM	REVISED -
FILE NAME = P9120113-sht-xsc-US30.dgn	DRAWN - DS	REVISED -
PLOT SCALE = 1"=10'	CHECKED - TH	REVISED -
PLOT DATE = 10/16/2014	DATE - 10/16/14	REVISED -

STATE OF ILLINOIS
DEPARTMENT OF TRANSPORTATION

CROSS SECTIONS
US ROUTE 30

SCALE: 1"=10' | SHEET 17 OF 39 SHEETS | STA. 128+60.00 TO STA. 130+00.00

F.A.U. RTE.	SECTION	COUNTY	TOTAL SHEETS	SHEET NO.
573	30-N(13)	KANE	219	184

CONTRACT NO. 60X70

ILLINOIS FED. AID PROJECT

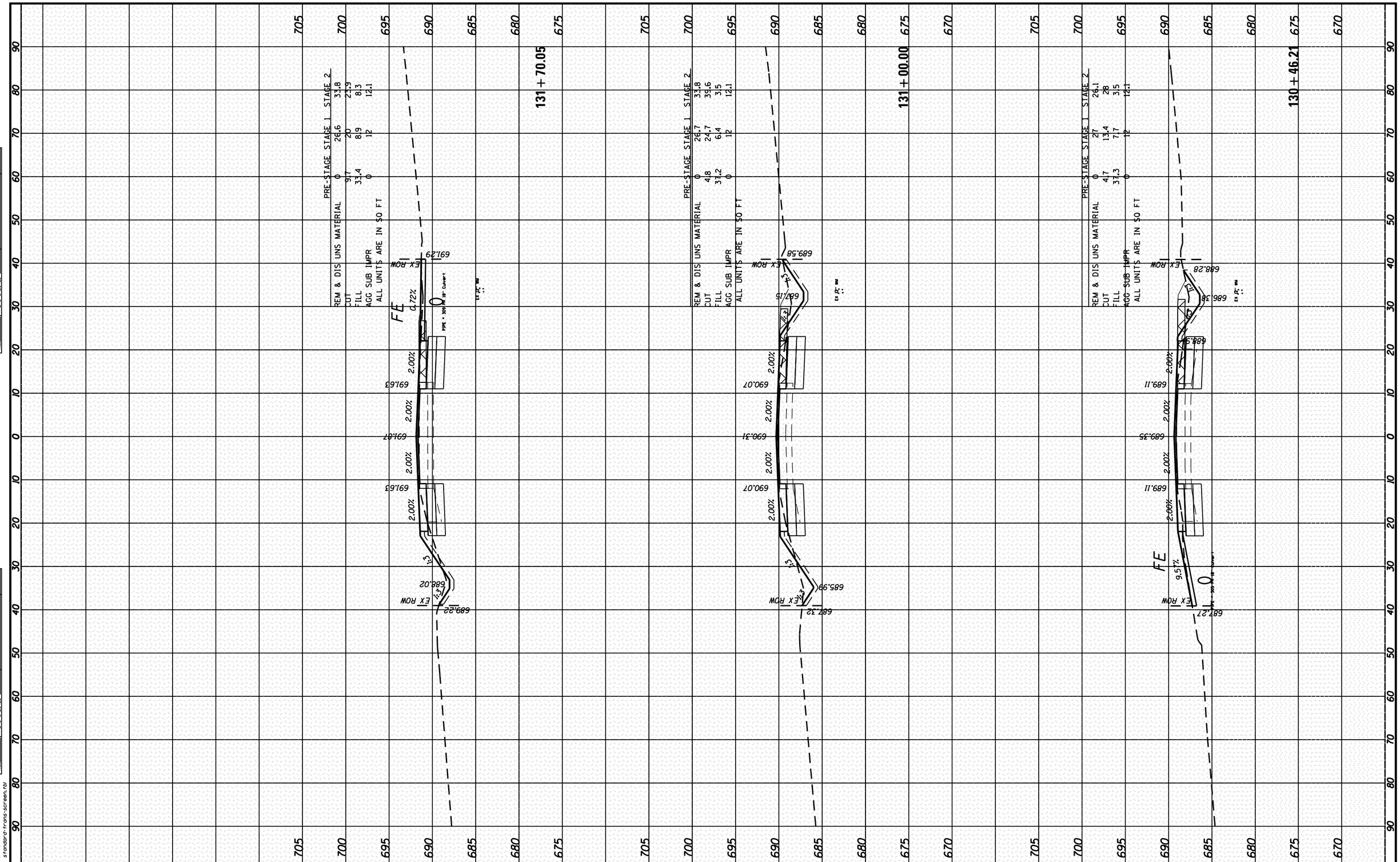

FINAL SURVEY	BY	DATE
SURVEYED		
PLOTTED		
TEMPLATE		
AREAS		
AREAS CHECKED		
NOTE BOOK NO.		

ORIGINAL SURVEY	BY	DATE
SURVEYED		
PLOTTED		
TEMPLATE		
AREAS		
AREAS CHECKED		
NOTE BOOK NO.		

COMPANY NAME:
PROJECT CONTACT:
CREATE DATE: 10/16/2014 8:32:03 AM
DATE PLOTTED:
FILE NAME: P9120113-sht-xsc-US30.dgn
PLOT DRIVER: pdf.pltr
PEN TABLE: standard-trans-screen.tbl

HRGreen.com
Illinois Professional Design Firm
184-001322

USER NAME = dstancz	DESIGNED - JRM	REVISED -
FILE NAME = P9120113-sht-xsc-US30.dgn	DRAWN - DS	REVISED -
PLOT SCALE = 1"=10'	CHECKED - TH	REVISED -
PLOT DATE = 10/16/2014	DATE - 10/16/14	REVISED -

STATE OF ILLINOIS
DEPARTMENT OF TRANSPORTATION

CROSS SECTIONS
US ROUTE 30

SCALE: 1"=10' | SHEET 18 OF 39 SHEETS | STA. 130+46.21 TO STA. 131+70.05

F.A.U. RTE.	SECTION	COUNTY	TOTAL SHEETS	SHEET NO.
573	30-N(13)	KANE	219	185

CONTRACT NO. 60X70

ILLINOIS FED. AID PROJECT

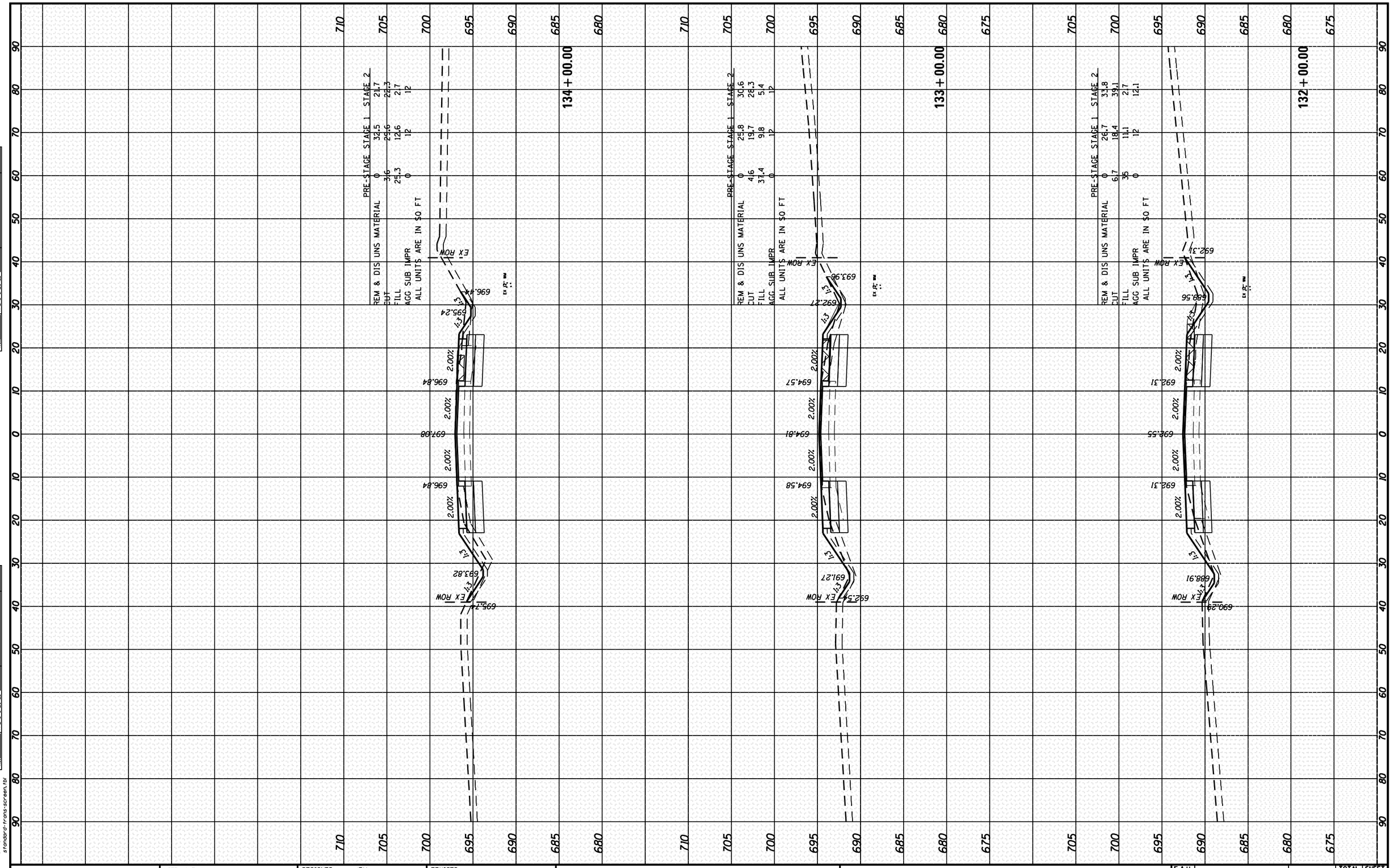

FINAL SURVEY		BY	DATE
NOTE BOOK	SURVEYED		
	PLOTTED		
	TEMPLATE		
	AREAS		
	AREAS CHECKED		
NO.			

ORIGINAL SURVEY		BY	DATE
NOTE BOOK	SURVEYED		
	PLOTTED		
	TEMPLATE		
	AREAS		
	AREAS CHECKED		
NO.			

COMPANY NAME:
PROJECT CONTACT:
CLIENT:
DATE PLOTTED: 10/16/2014 8:32:13 AM
FILE NAME: P9120113-sht-xsc-US30.dgn
PLOT DRIVER: pdf.plt
PEN TABLE: standard-trans-screen.tbl

HRGreen.com
Illinois Professional Design Firm
184-001322

USER NAME = dstancz	DESIGNED - JRM	REVISED -
FILE NAME = P9120113-sht-xsc-US30.dgn	DRAWN - DS	REVISED -
PLOT SCALE = 1"=10'	CHECKED - TH	REVISED -
PLOT DATE = 10/16/2014	DATE - 10/16/14	REVISED -

STATE OF ILLINOIS
DEPARTMENT OF TRANSPORTATION

CROSS SECTIONS
US ROUTE 30

SCALE: 1"=10' | SHEET 19 OF 39 SHEETS | STA. 132+00.00 TO STA. 134+00.00

F.A.U. RTE.	SECTION	COUNTY	TOTAL SHEETS	SHEET NO.
573	30-N(13)	KANE	219	186

CONTRACT NO. 60X70

ILLINOIS FED. AID PROJECT

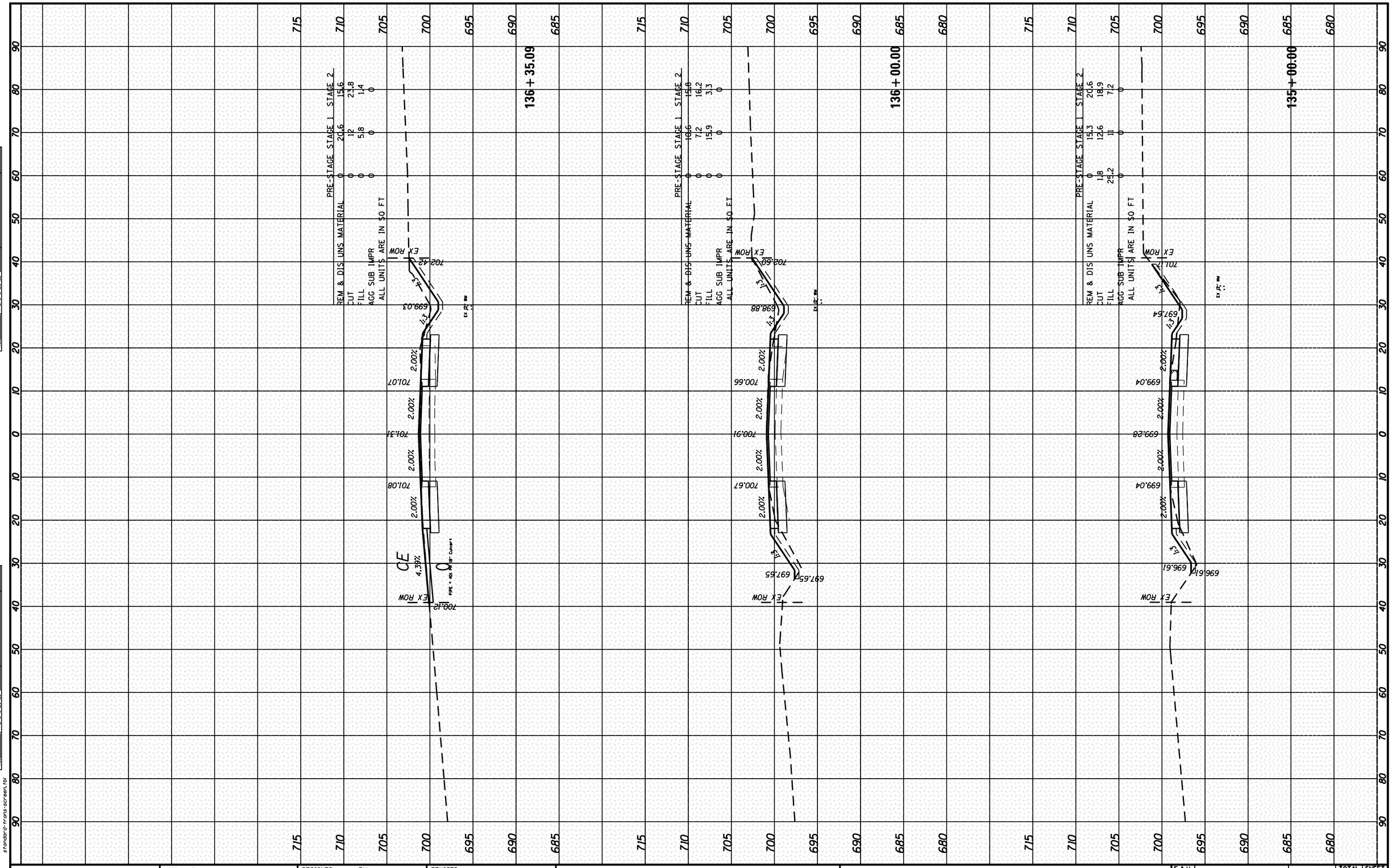

FINAL SURVEY		BY	DATE
NOTE BOOK	SURVEYED		
	PLOTTED		
	TEMPLATE		
	AREAS		
NO.	AREAS CHECKED		

ORIGINAL SURVEY		BY	DATE
NOTE BOOK	SURVEYED		
	PLOTTED		
	TEMPLATE		
	AREAS		
NO.	AREAS CHECKED		

COMPANY NAME:
PROJECT CONTACT:
CLIENT:
DATE PLOTTED: 10/16/2014 8:20:21 AM
FILE NAME: P9120113-sht-xsc-US30.dgn
PLOT DRIVER: pdf.plt
PEN TABLE: standard-trans-screen.tbl

HRGreen.com
Illinois Professional Design Firm
184-001322

USER NAME = dstancz	DESIGNED - JRM	REVISED -
FILE NAME = P9120113-sht-xsc-US30.dgn	DRAWN - DS	REVISED -
PLOT SCALE = 1"=10'	CHECKED - TH	REVISED -
PLOT DATE = 10/16/2014	DATE - 10/16/14	REVISED -

STATE OF ILLINOIS
DEPARTMENT OF TRANSPORTATION

CROSS SECTIONS
US ROUTE 30

SCALE: 1"=10' | SHEET 20 OF 39 SHEETS | STA. 135+00.00 TO STA. 136+35.09

F.A.U. RTE.	SECTION	COUNTY	TOTAL SHEETS	SHEET NO.
573	30-N(13)	KANE	219	187

CONTRACT NO. 60X70

ILLINOIS FED. AID PROJECT

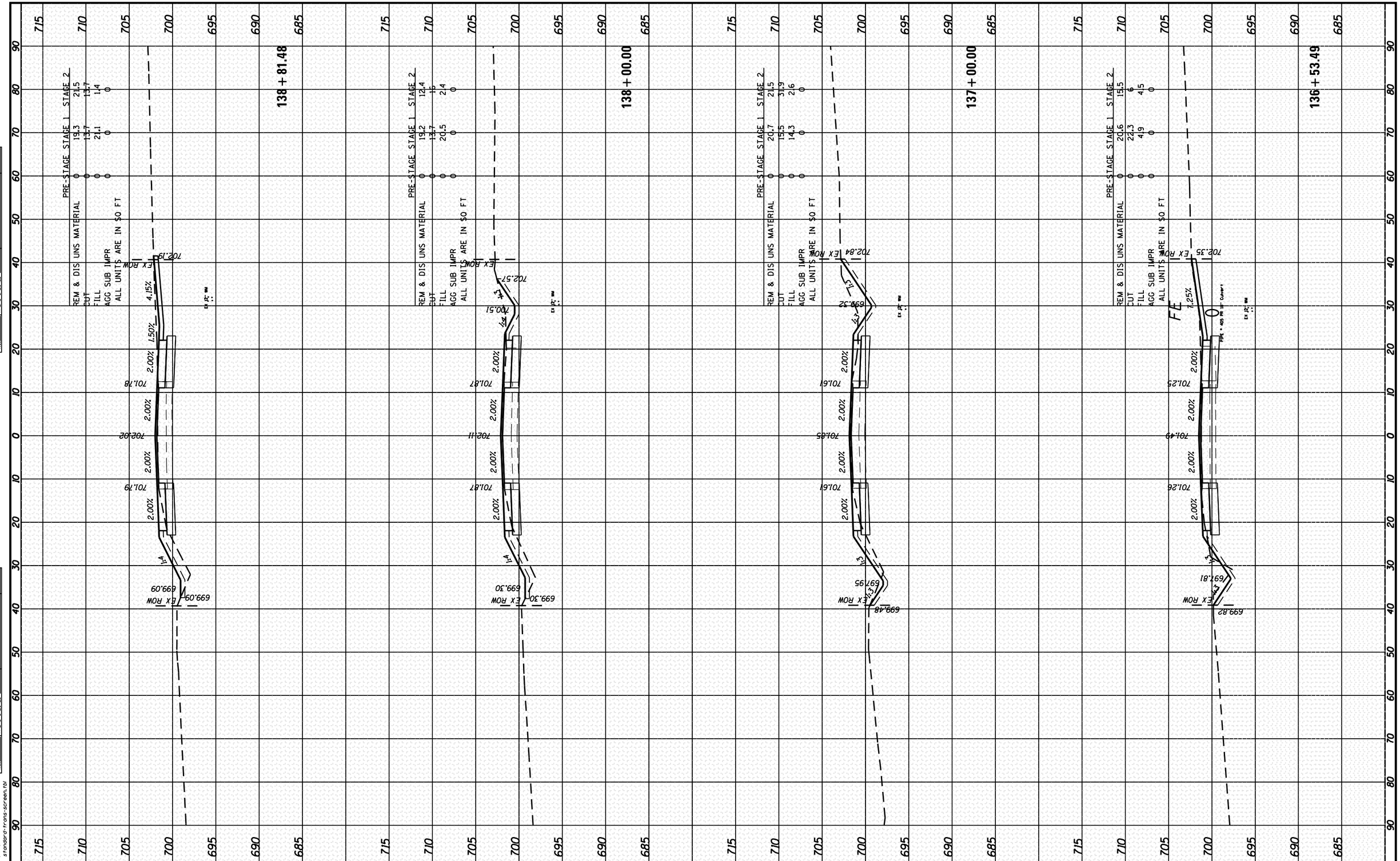

FINAL SURVEY	BY	DATE
SURVEYED		
PLOTTED		
TEMPLATE		
AREAS		
AREAS CHECKED		
NOTE BOOK NO.		

ORIGINAL SURVEY	BY	DATE
SURVEYED		
PLOTTED		
TEMPLATE		
AREAS		
AREAS CHECKED		
NOTE BOOK NO.		

COMPANY NAME:
PROJECT CONTACT:
CLIENT:
DATE PLOTTED: 10/16/2014 8:32:34 AM
FILE NAME: P9120113-sht-xsc-US30.dgn
PLOT DRIVER: pdf.pltr
PEN TABLE: standard-trans-screen.tbl

HRGreen.com
Illinois Professional Design Firm
184-001322

USER NAME = datenez	DESIGNED - JRM	REVISED -
FILE NAME = P9120113-sht-xsc-US30.dgn	DRAWN - DS	REVISED -
PLOT SCALE = 1"=10'	CHECKED - TH	REVISED -
PLOT DATE = 10/16/2014	DATE - 10/16/14	REVISED -

STATE OF ILLINOIS
DEPARTMENT OF TRANSPORTATION

CROSS SECTIONS
US ROUTE 30

SCALE: 1"=10' | SHEET 21 OF 39 SHEETS | STA. 136+53.49 TO STA. 138+81.48

F.A.U. RTE.	SECTION	COUNTY	TOTAL SHEETS	SHEET NO.
573	30-N(13)	KANE	219	188

CONTRACT NO. 60X70

ILLINOIS FED. AID PROJECT

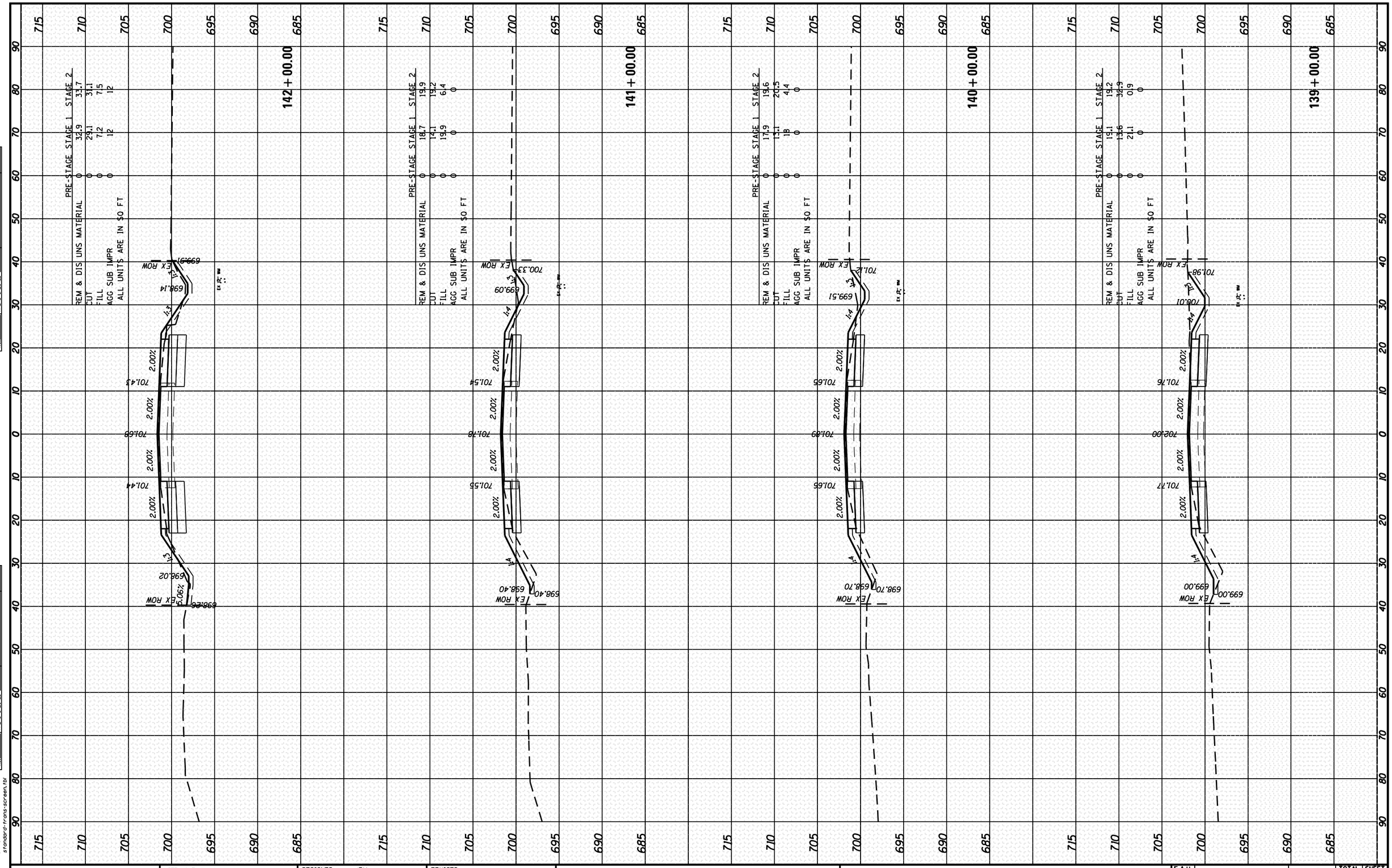

FINAL SURVEY	BY	DATE
SURVEYED		
PLOTTED		
TEMPLATE		
AREAS		
AREAS CHECKED		
NOTE BOOK		
NO.		

ORIGINAL SURVEY	BY	DATE
SURVEYED		
PLOTTED		
TEMPLATE		
AREAS		
AREAS CHECKED		
NOTE BOOK		
NO.		

COMPANY NAME:
PROJECT CONTACT:
CLIENT:
DATE PLOTTED: 10/16/2014 8:32:45 AM
FILE NAME: P9120113-sht-xsc-US30.dgn
PLOT DRIVER: pdf.plt
PEN TABLE: standard-trans-screen.tbl

HRGreen.com
Illinois Professional Design Firm
184-001322

USER NAME = dstancz	DESIGNED - JRM	REVISED -	
FILE NAME = P9120113-sht-xsc-US30.dgn	DRAWN - DS	REVISED -	
PLOT SCALE = 1"=10'	CHECKED - TH	REVISED -	
PLOT DATE = 10/16/2014	DATE - 10/16/14	REVISED -	

STATE OF ILLINOIS
DEPARTMENT OF TRANSPORTATION

CROSS SECTIONS
US ROUTE 30

SCALE: 1"=10' | SHEET 22 OF 39 SHEETS | STA. 139+00.00 TO STA. 142+00.00

F.A.U. RTE.	SECTION	COUNTY	TOTAL SHEETS	SHEET NO.
573	30-N(13)	KANE	219	189

CONTRACT NO. 60X70

ILLINOIS FED. AID PROJECT

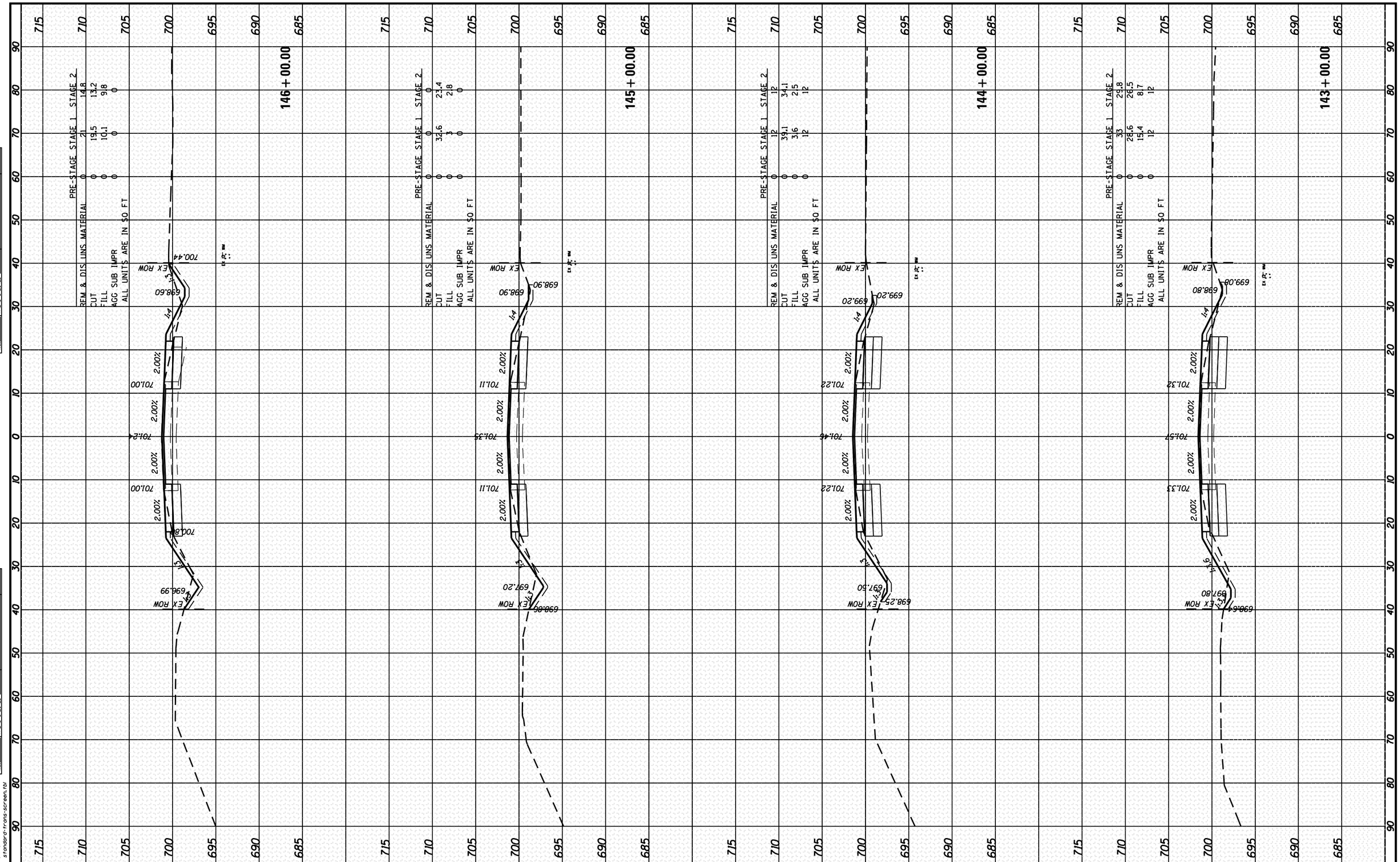

FINAL SURVEY	BY	DATE
SURVEYED		
PLOTTED		
TEMPLATE		
AREAS		
AREAS CHECKED		
NOTE BOOK		
NO.		

ORIGINAL SURVEY	BY	DATE
SURVEYED		
PLOTTED		
TEMPLATE		
AREAS		
AREAS CHECKED		
NOTE BOOK		
NO.		

COMPANY NAME:
PROJECT CONTACT:
CREATE DATE:
DATE PLOTTED: 10/16/2014 8:32:55 AM
FILE NAME: P9120113-sht-xsc-US30.dgn
PLOT DRIVER: pdf.pltr
PEN TABLE: standard-trans-screen.tbl

HRGreen.com
Illinois Professional Design Firm
184-001322

USER NAME = dstancz	DESIGNED - JRM	REVISED -
FILE NAME = P9120113-sht-xsc-US30.dgn	DRAWN - DS	REVISED -
PLOT SCALE = 1"=10'	CHECKED - TH	REVISED -
PLOT DATE = 10/16/2014	DATE - 10/16/14	REVISED -

STATE OF ILLINOIS
DEPARTMENT OF TRANSPORTATION

CROSS SECTIONS
US ROUTE 30

SCALE: 1"=10' | SHEET 23 OF 39 SHEETS | STA. 143+00.00 TO STA. 146+00.00

F.A.U. RTE.	SECTION	COUNTY	TOTAL SHEETS	SHEET NO.
573	30-N(13)	KANE	219	190

CONTRACT NO. 60X70

ILLINOIS FED. AID PROJECT

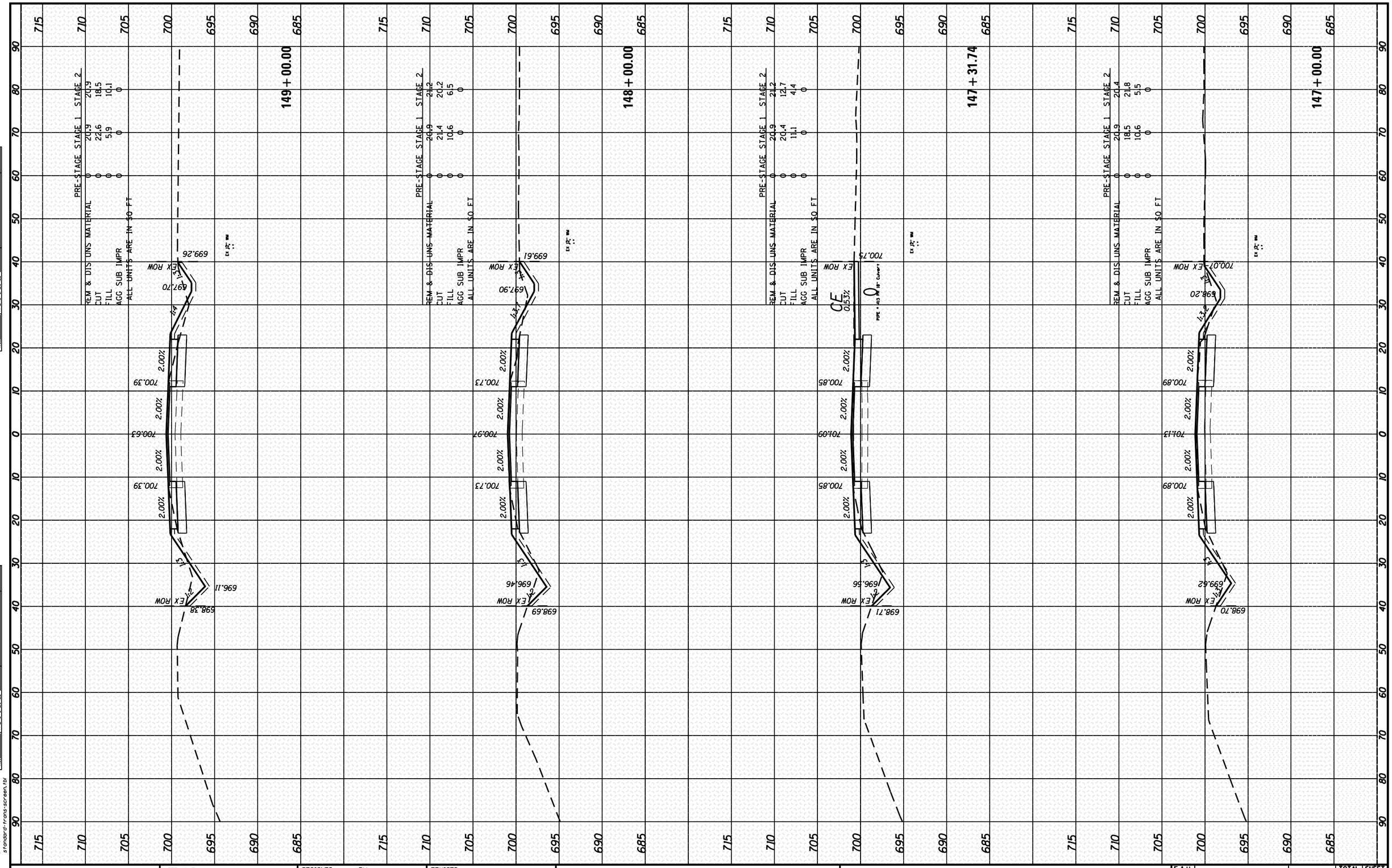

FINAL SURVEY	BY	DATE
SURVEYED		
PLOTTED		
TEMPLATE		
AREAS		
AREAS CHECKED		
NOTE BOOK		
NO.		

ORIGINAL SURVEY	BY	DATE
SURVEYED		
PLOTTED		
TEMPLATE		
AREAS		
AREAS CHECKED		
NOTE BOOK		
NO.		

COMPANY NAME:
PROJECT CONTACT:
CLIENT:
DATE PLOTTED: 10/16/2014 8:13:07 AM
FILE NAME: P9120113-sht-xsc-US30.dgn
PLOT DRIVER: pdf.plt
PEN TABLE: standard-trans-screen.tbl

HRGreen.com
Illinois Professional Design Firm
184-001322

USER NAME = dstancz	DESIGNED - JRM	REVISED -	
FILE NAME = P9120113-sht-xsc-US30.dgn	DRAWN - DS	REVISED -	
PLOT SCALE = 1"=10'	CHECKED - TH	REVISED -	
PLOT DATE = 10/16/2014	DATE - 10/16/14	REVISED -	

STATE OF ILLINOIS
DEPARTMENT OF TRANSPORTATION

CROSS SECTIONS
US ROUTE 30

SCALE: 1"=10' | SHEET 24 OF 39 SHEETS | STA. 147+00.00 TO STA. 149+00.00

F.A.U. RTE.	SECTION	COUNTY	TOTAL SHEETS	SHEET NO.
573	30-N(13)	KANE	219	191

CONTRACT NO. 60X70

ILLINOIS FED. AID PROJECT

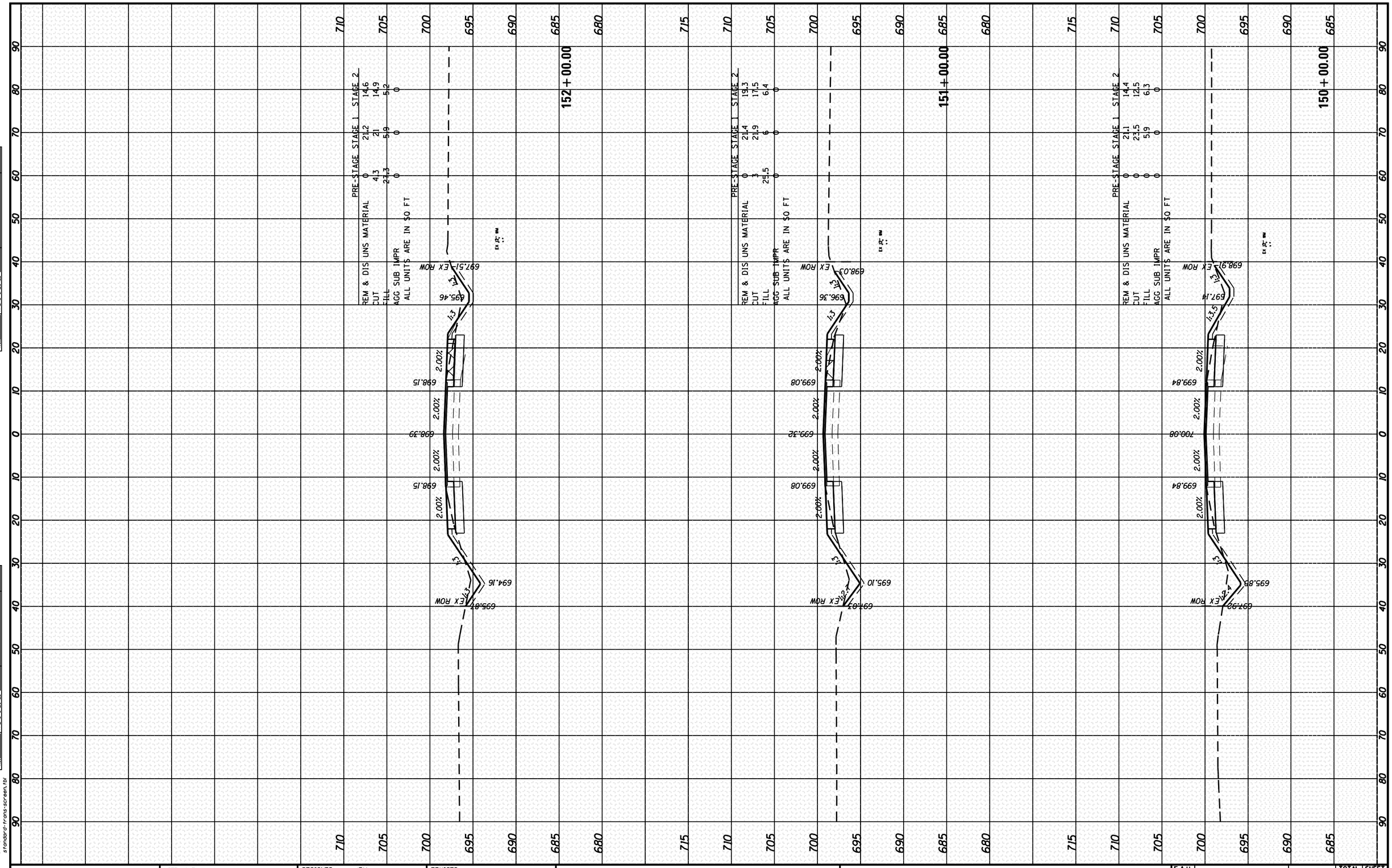

FINAL SURVEY	BY	DATE
SURVEYED		
PLOTTED		
TEMPLATE		
AREAS		
AREAS CHECKED		
NOTE BOOK NO.		

ORIGINAL SURVEY	BY	DATE
SURVEYED		
PLOTTED		
TEMPLATE		
AREAS		
AREAS CHECKED		
NOTE BOOK NO.		

COMPANY NAME:
PROJECT CONTACT:
CLIENT:
DATE PLOTTED: 10/16/2014 8:33:18 AM
FILE NAME: P9120113-sht-xsc-US30.dgn
PLOT DRIVER: pdf.plt
PEN TABLE: standard-trans-screen.tbl

HRGreen.com
Illinois Professional Design Firm
184-001322

USER NAME = dstancz	DESIGNED - JRM	REVISED -
FILE NAME = P9120113-sht-xsc-US30.dgn	DRAWN - DS	REVISED -
PLOT SCALE = 1"=10'	CHECKED - TH	REVISED -
PLOT DATE = 10/16/2014	DATE - 10/16/14	REVISED -

STATE OF ILLINOIS
DEPARTMENT OF TRANSPORTATION

CROSS SECTIONS
US ROUTE 30

SCALE: 1"=10' | SHEET 25 OF 39 SHEETS | STA. 150+00.00 TO STA. 152+00.00

F.A.U. RTE.	SECTION	COUNTY	TOTAL SHEETS	SHEET NO.
573	30-N(13)	KANE	219	192

CONTRACT NO. 60X70

ILLINOIS FED. AID PROJECT

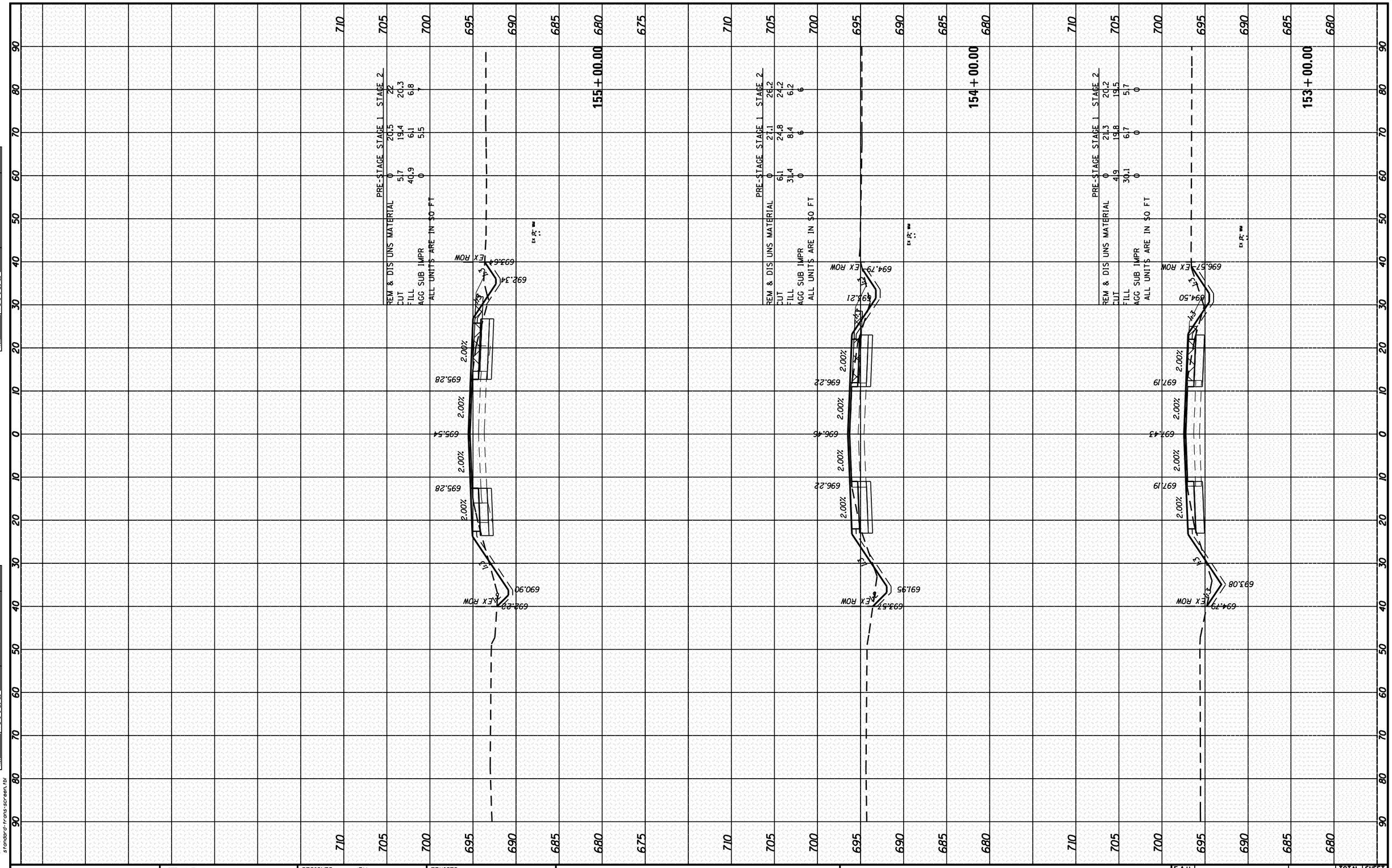

FINAL SURVEY	BY	DATE
SURVEYED		
PLOTTED		
TEMPLATE		
AREAS		
AREAS CHECKED		
NOTE BOOK NO.		

ORIGINAL SURVEY	BY	DATE
SURVEYED		
PLOTTED		
TEMPLATE		
AREAS		
AREAS CHECKED		
NOTE BOOK NO.		

COMPANY NAME:
PROJECT CONTACT:
CLIENT:
DATE PLOTTED: 10/16/2014 8:33:28 AM
FILE NAME: P9120113-sht-xsc-US30.dgn
PLOT DRIVER: pdf.plt
PEN TABLE: standard-trans-screen.tbl

HRGreen.com
Illinois Professional Design Firm
184-001322

USER NAME = dstancz	DESIGNED - JRM	REVISED -	
FILE NAME = P9120113-sht-xsc-US30.dgn	DRAWN - DS	REVISED -	
PLOT SCALE = 1"=10'	CHECKED - TH	REVISED -	
PLOT DATE = 10/16/2014	DATE - 10/16/14	REVISED -	

STATE OF ILLINOIS
DEPARTMENT OF TRANSPORTATION

CROSS SECTIONS
US ROUTE 30

SCALE: 1"=10' | SHEET 26 OF 39 SHEETS | STA. 153+00.00 TO STA. 155+00.00

F.A.U. RTE.	SECTION	COUNTY	TOTAL SHEETS	SHEET NO.
573	30-N(13)	KANE	219	193

CONTRACT NO. 60X70

ILLINOIS FED. AID PROJECT

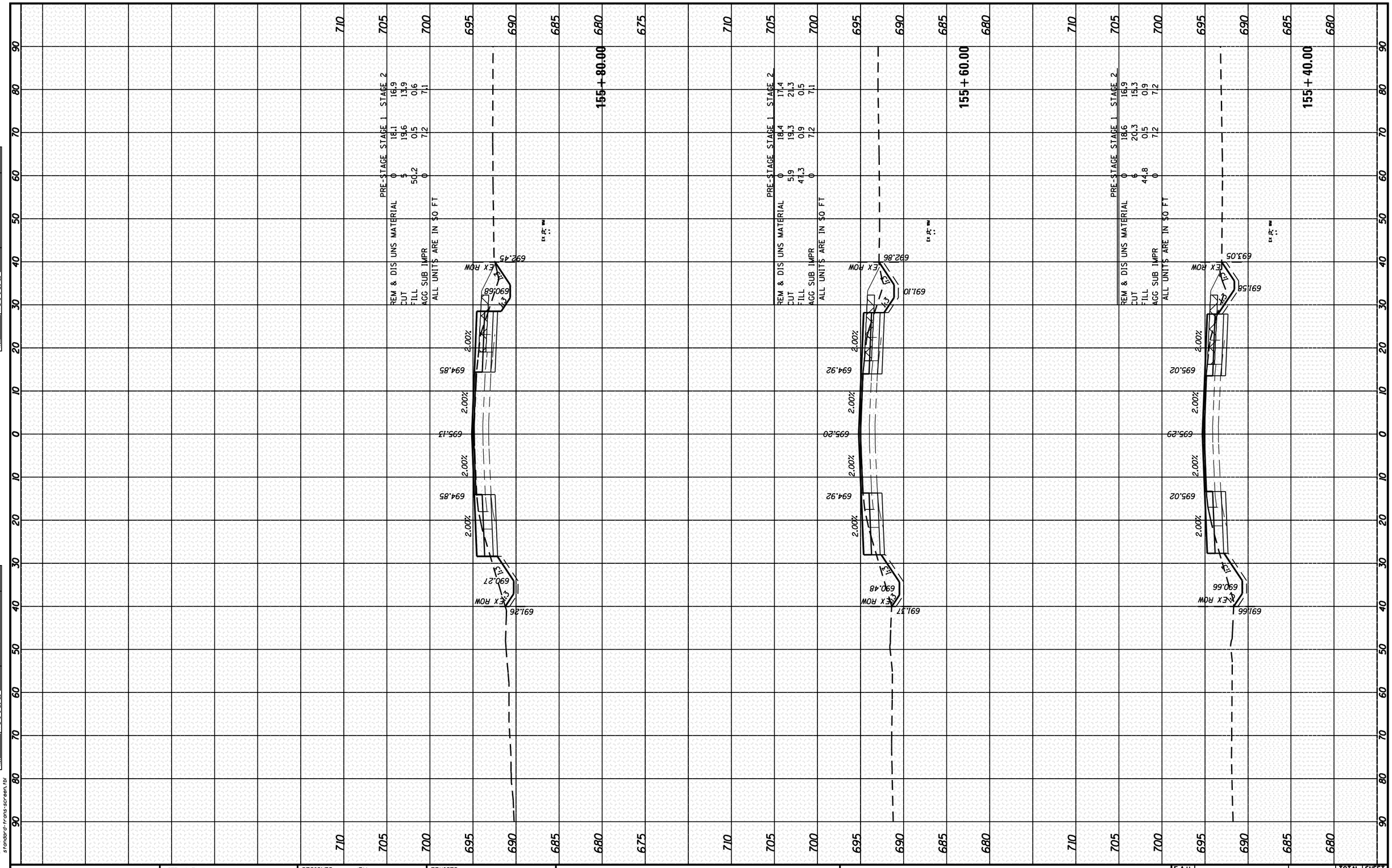

FINAL SURVEY	BY	DATE
SURVEYED		
PLOTTED		
TEMPLATE		
AREAS		
AREAS CHECKED		
NOTE BOOK		
NO.		

ORIGINAL SURVEY	BY	DATE
SURVEYED		
PLOTTED		
TEMPLATE		
AREAS		
AREAS CHECKED		
NOTE BOOK		
NO.		

COMPANY NAME:
PROJECT CONTACT:
CLIENT:
DATE PLOTTED: 10/16/2014 8:33:38 AM
FILE NAME: P9120113-sht-xsc-US30.dgn
PLOT DRIVER: pdf.plt
PEN TABLE: standard-trans-screen.tbl

HRGreen.com
Illinois Professional Design Firm
184-001322

USER NAME = dstencz	DESIGNED - JRM	REVISED -
FILE NAME = P9120113-sht-xsc-US30.dgn	DRAWN - DS	REVISED -
PLOT SCALE = 1"=10'	CHECKED - TH	REVISED -
PLOT DATE = 10/16/2014	DATE - 10/16/14	REVISED -

STATE OF ILLINOIS
DEPARTMENT OF TRANSPORTATION

CROSS SECTIONS
US ROUTE 30

SCALE: 1"=10' | SHEET 27 OF 39 SHEETS | STA. 155+40.00 TO STA. 155+80.00

F.A.U. RTE.	SECTION	COUNTY	TOTAL SHEETS	SHEET NO.
573	30-N(13)	KANE	219	194

CONTRACT NO. 60X70

ILLINOIS FED. AID PROJECT

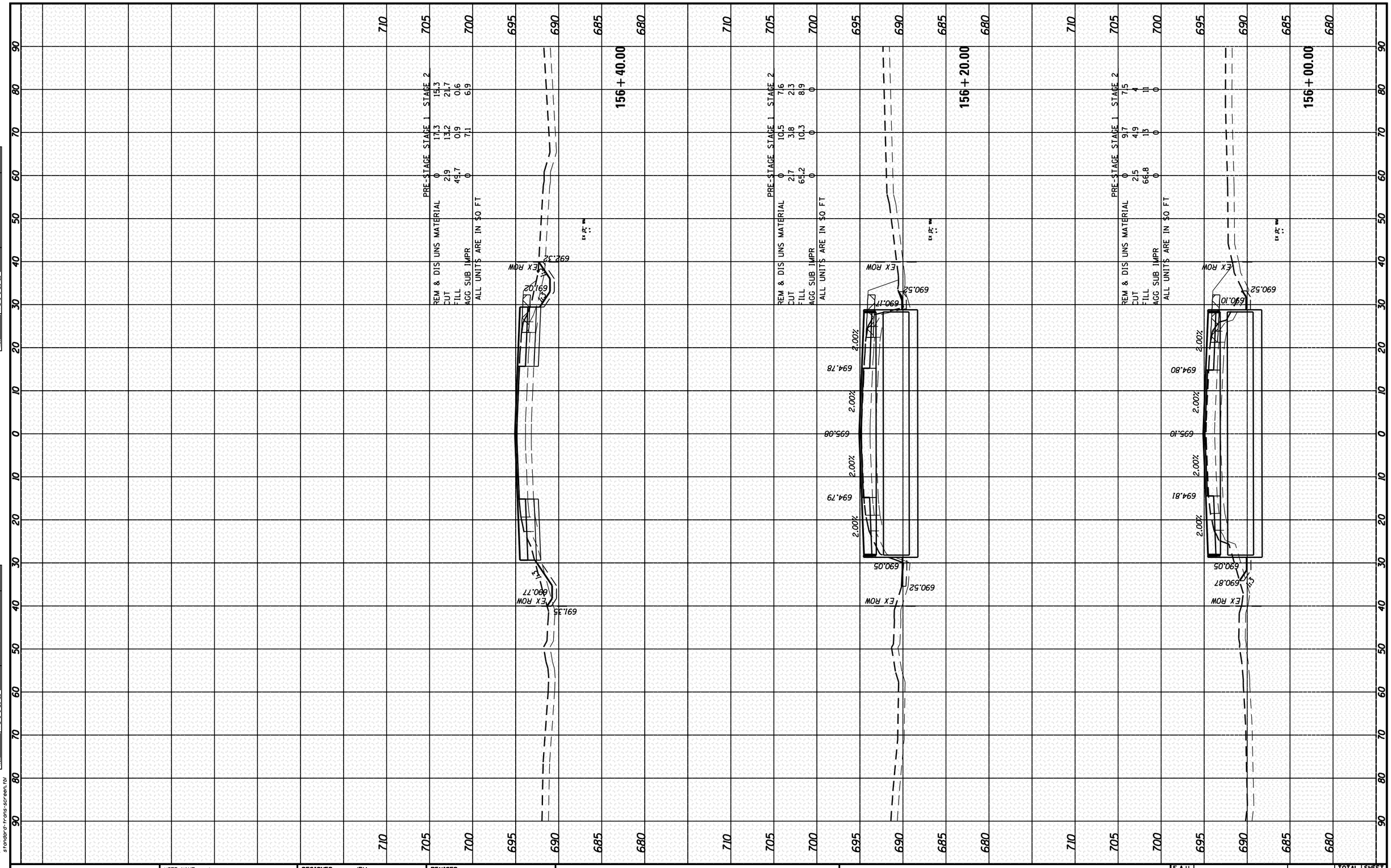

FINAL SURVEY	BY	DATE
SURVEYED		
PLOTTED		
TEMPLATE		
AREAS		
AREAS CHECKED		
NOTE BOOK		
NO.		

ORIGINAL SURVEY	BY	DATE
SURVEYED		
PLOTTED		
TEMPLATE		
AREAS		
AREAS CHECKED		
NOTE BOOK		
NO.		

COMPANY NAME:
PROJECT CONTACT:
CLIENT:
DATE PLOTTED: 10/16/2014 8:31:48 AM
FILE NAME: P9120113-sht-xsc-US30.dgn
PLOT DRIVER: pdf.plt
PEN TABLE: standard-trans-screen.tbl

HRGreen.com
Illinois Professional Design Firm
184-001322

USER NAME = dstancz	DESIGNED - JRM	REVISED -
FILE NAME = P9120113-sht-xsc-US30.dgn	DRAWN - DS	REVISED -
PLOT SCALE = 1"=10'	CHECKED - TH	REVISED -
PLOT DATE = 10/16/2014	DATE - 10/16/14	REVISED -

STATE OF ILLINOIS
DEPARTMENT OF TRANSPORTATION

CROSS SECTIONS
US ROUTE 30

SCALE: 1"=10' | SHEET 28 OF 39 SHEETS | STA. 156+00.00 TO STA. 156+40.00

F.A.U. RTE.	SECTION	COUNTY	TOTAL SHEETS	SHEET NO.
573	30-N(13)	KANE	219	195

CONTRACT NO. 60X70

ILLINOIS FED. AID PROJECT

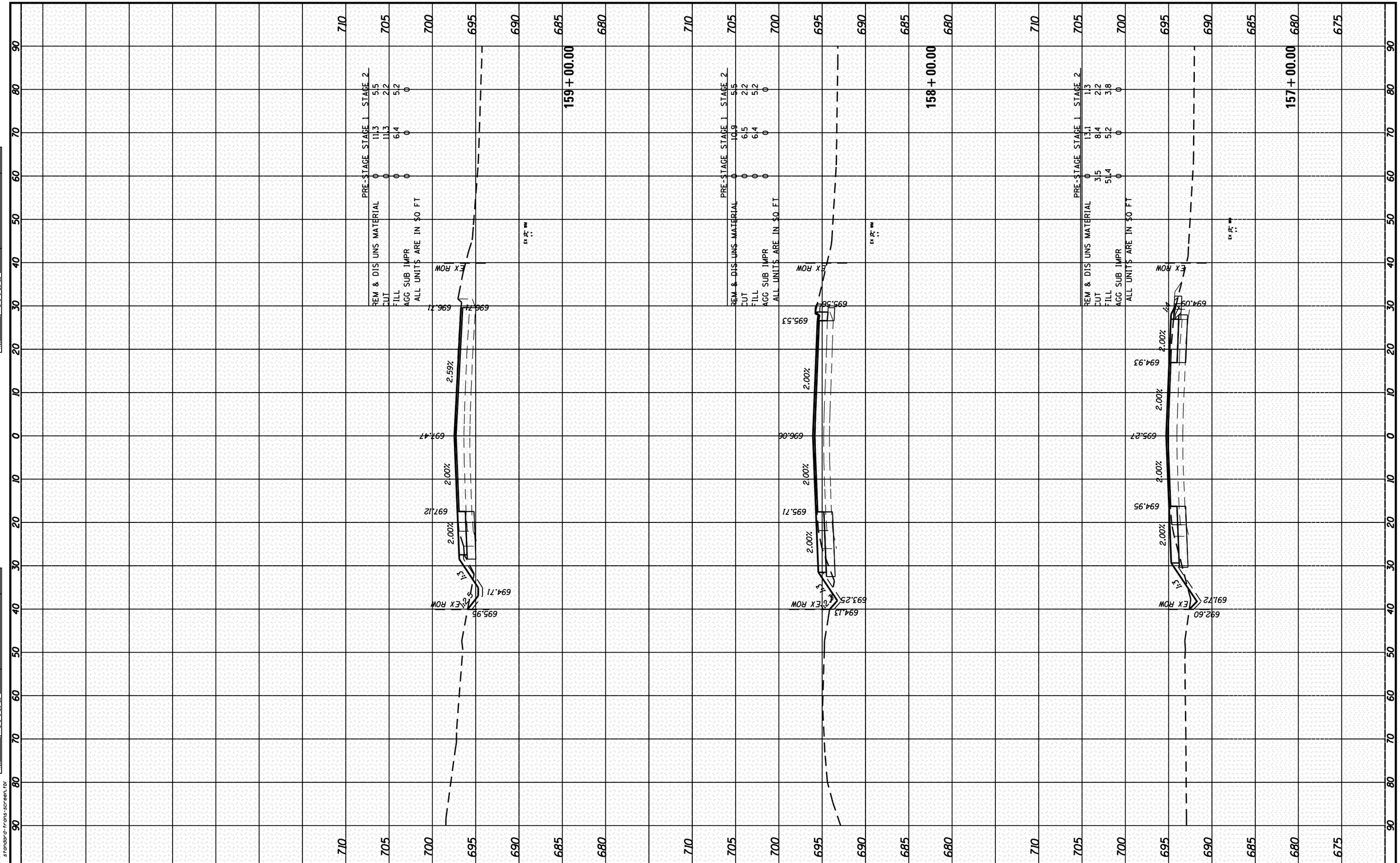

FINAL SURVEY		BY	DATE
NOTE BOOK	SURVEYED		
	PLOTTED		
	TEMPLATE		
	AREAS		
NO.	AREAS CHECKED		

ORIGINAL SURVEY		BY	DATE
NOTE BOOK	SURVEYED		
	PLOTTED		
	TEMPLATE		
	AREAS		
NO.	AREAS CHECKED		

COMPANY NAME:
PROJECT CONTACT:
DATE & TIME: 10/16/2014 8:33:58 AM
DATE PLOTTED: P9120113-sht-xsc-US30.dgn
FILE NAME: P9120113-sht-xsc-US30.dgn
PLOT DRIVER: pdf.plt
PEN TABLE: standard-trans-screen.tbl

HRGreen.com
Illinois Professional Design Firm
184-001322

USER NAME = dstencz	DESIGNED - JRM	REVISED -
FILE NAME = P9120113-sht-xsc-US30.dgn	DRAWN - DS	REVISED -
PLOT SCALE = 1"=10'	CHECKED - TH	REVISED -
PLOT DATE = 10/16/2014	DATE - 10/16/14	REVISED -

STATE OF ILLINOIS
DEPARTMENT OF TRANSPORTATION

CROSS SECTIONS
US ROUTE 30

SCALE: 1"=10' | SHEET 29 OF 39 SHEETS | STA. 157+00.00 TO STA. 159+00.00

F.A.U. RTE.	SECTION	COUNTY	TOTAL SHEETS	SHEET NO.
573	30-N(13)	KANE	219	196

CONTRACT NO. 60X70

ILLINOIS FED. AID PROJECT

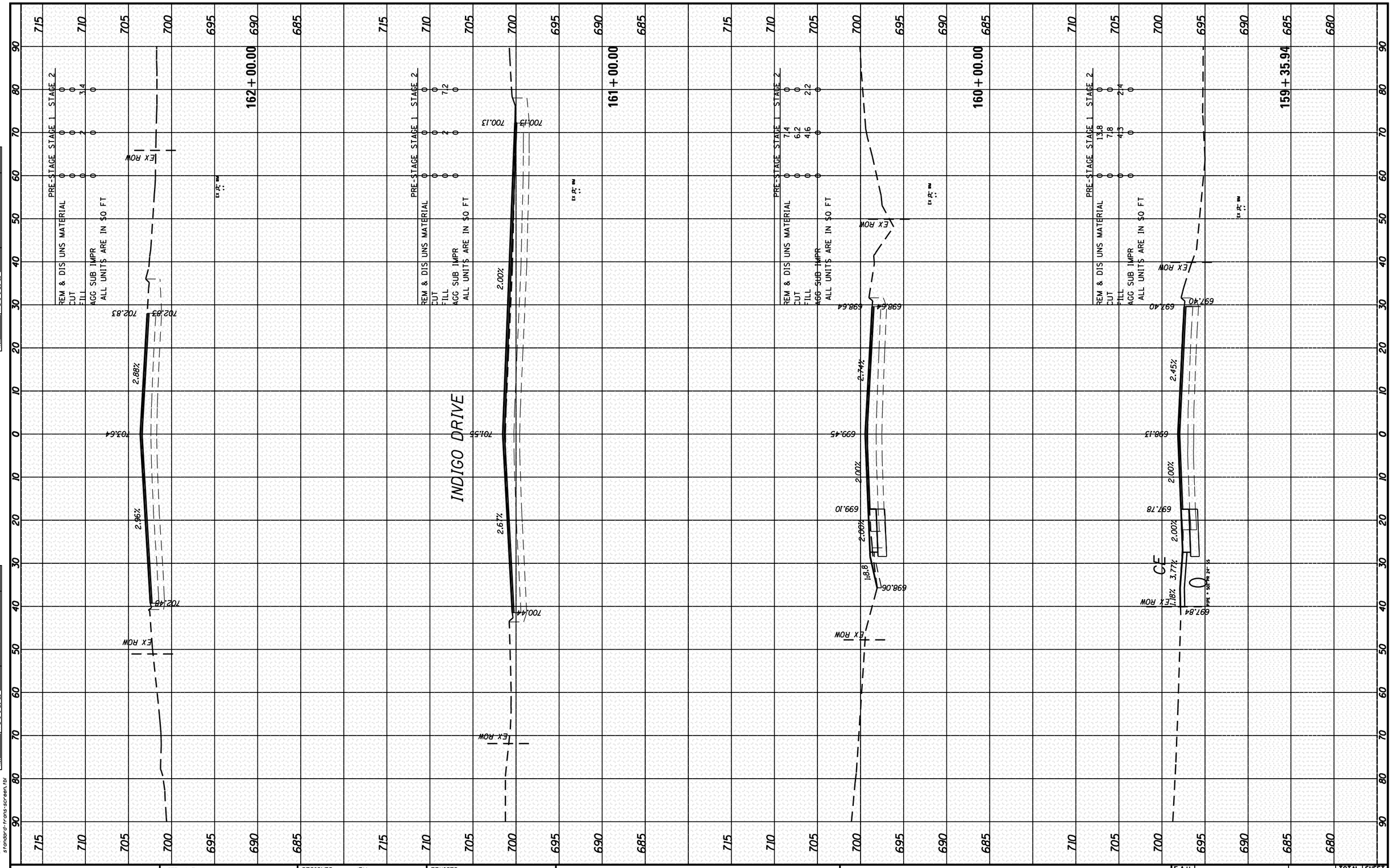

FINAL SURVEY	BY	DATE
SURVEYED		
PLOTTED		
TEMPLATE		
AREAS		
AREAS CHECKED		
NOTE BOOK NO.		

ORIGINAL SURVEY	BY	DATE
SURVEYED		
PLOTTED		
TEMPLATE		
AREAS		
AREAS CHECKED		
NOTE BOOK NO.		

COMPANY NAME:
PROJECT CONTACT:
CLIENT:
DATE PLOTTED: 10/16/2014 8:34:08 AM
FILE NAME: P9120113-sht-xsc-US30.dgn
PLOT DRIVER: pdf.pltr
PEN TABLE: standard-trans-screen.tbl

HRGreen.com
Illinois Professional Design Firm
184-001322

USER NAME = dstancz	DESIGNED - JRM	REVISED -	
FILE NAME = P9120113-sht-xsc-US30.dgn	DRAWN - DS	REVISED -	
PLOT SCALE = 1"=10'	CHECKED - TH	REVISED -	
PLOT DATE = 10/16/2014	DATE - 10/16/14	REVISED -	

STATE OF ILLINOIS
DEPARTMENT OF TRANSPORTATION

CROSS SECTIONS
US ROUTE 30

SCALE: 1"=10' | SHEET 30 OF 39 SHEETS | STA. 159+35.94 TO STA. 162+00.00

F.A.U. RTE.	SECTION	COUNTY	TOTAL SHEETS	SHEET NO.
573	30-N(13)	KANE	219	197

CONTRACT NO. 60X70

ILLINOIS FED. AID PROJECT

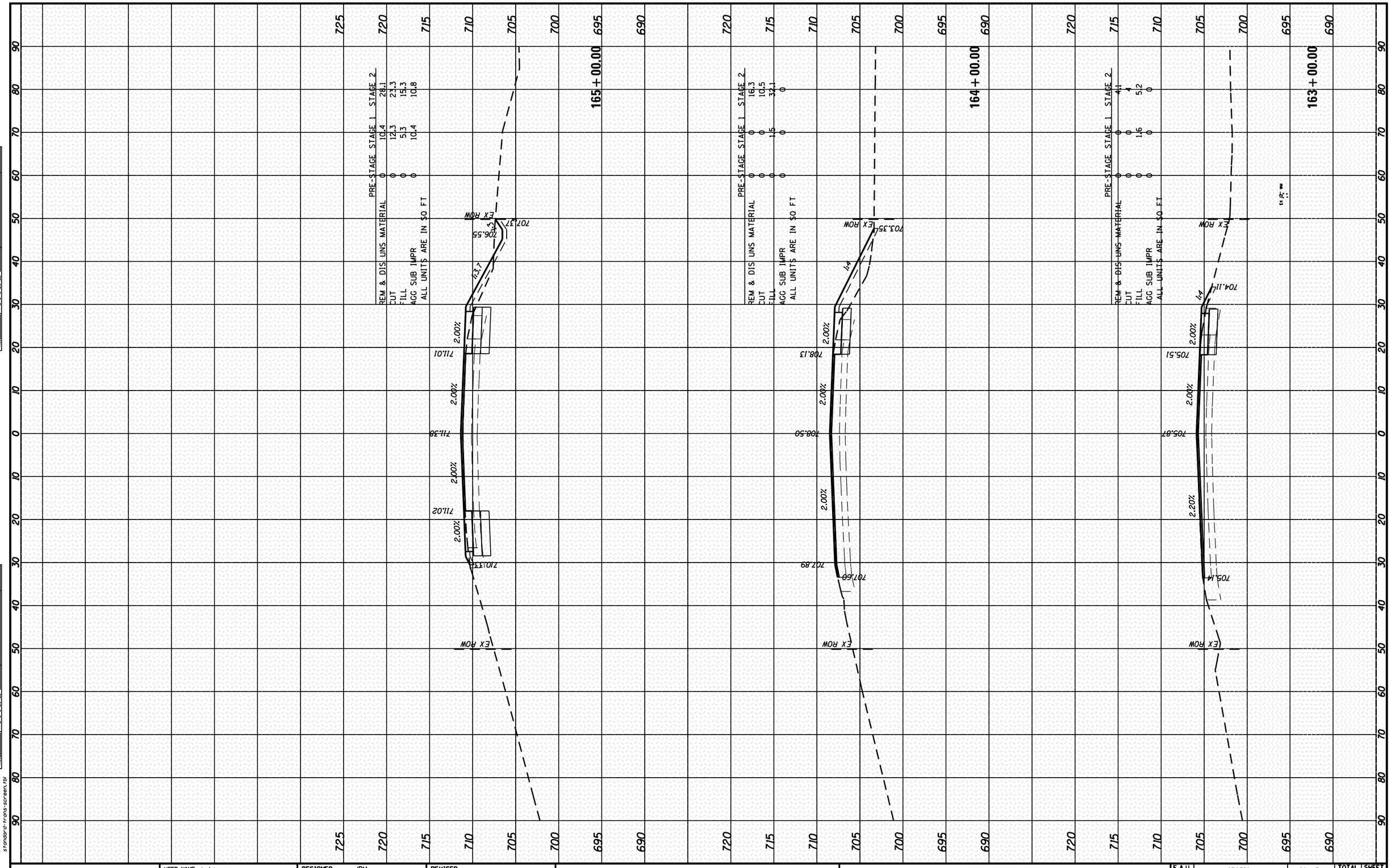

FINAL SURVEY	BY	DATE
SURVEYED		
PLOTTED		
TEMPLATE		
AREAS		
AREAS CHECKED		
NOTE BOOK		
NO.		

ORIGINAL SURVEY	BY	DATE
SURVEYED		
PLOTTED		
TEMPLATE		
AREAS		
AREAS CHECKED		
NOTE BOOK		
NO.		

COMPANY NAME:
PROJECT CONTACT:
DATE:
DATE PLOTTED: 10/16/2014 8:34:18 AM
FILE NAME: P91201113-sht-xsc-US30.dgn
PLOT DRIVER: pdf.plt
PEN TABLE: standard-trans-screen.tbl

HRGreen.com
Illinois Professional Design Firm
184-001322

USER NAME = dstancz	DESIGNED - JRM	REVISED -
FILE NAME = P91201113-sht-xsc-US30.dgn	DRAWN - DS	REVISED -
PLOT SCALE = 1"=10'	CHECKED - TH	REVISED -
PLOT DATE = 10/16/2014	DATE - 10/16/14	REVISED -

STATE OF ILLINOIS
DEPARTMENT OF TRANSPORTATION

CROSS SECTIONS
US ROUTE 30

SCALE: 1"=10' | SHEET 31 OF 39 SHEETS | STA. 163+00.00 TO STA. 165+00.00

F.A.U. RTE.	SECTION	COUNTY	TOTAL SHEETS	SHEET NO.
573	30-N(13)	KANE	219	198

CONTRACT NO. 60X70

ILLINOIS FED. AID PROJECT

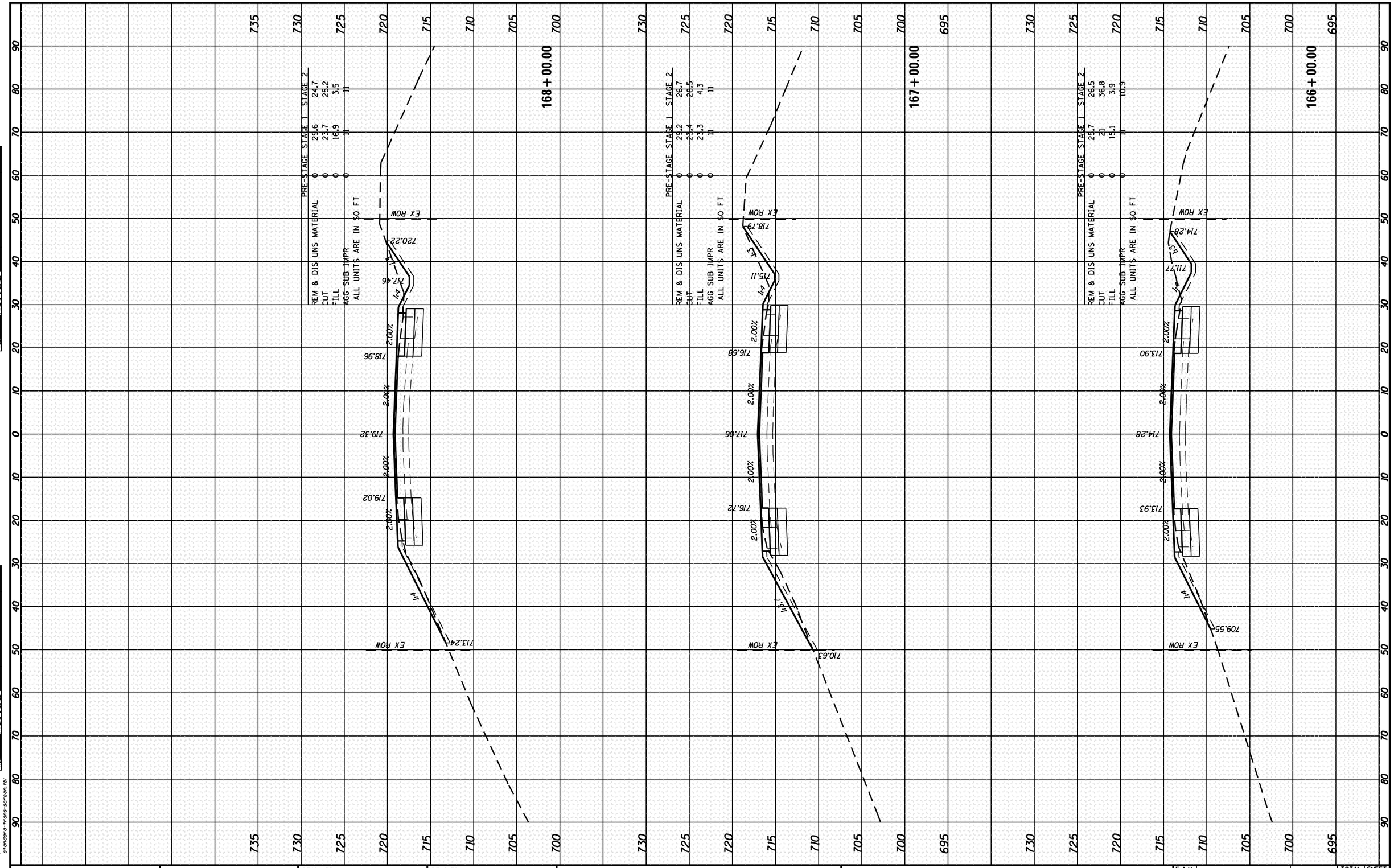

FINAL SURVEY	BY	DATE
SURVEYED		
PLOTTED		
TEMPLATE		
AREAS		
AREAS CHECKED		
NOTE BOOK NO.		

ORIGINAL SURVEY	BY	DATE
SURVEYED		
PLOTTED		
TEMPLATE		
AREAS		
AREAS CHECKED		
NOTE BOOK NO.		

COMPANY NAME:
PROJECT CONTACT:
DATE & TIME: 10/16/2014 8:34:28 AM
DATE PLOTTED: P9120113-sht-xsc-US30.dgn
FILE NAME: pdf.pit
PLOT DRIVER: standard-trans-screen.tbl
PEN TABLE:

HRGreen.com
Illinois Professional Design Firm
184-001322

USER NAME = dstencz	DESIGNED - JRM	REVISED -
FILE NAME = P9120113-sht-xsc-US30.dgn	DRAWN - DS	REVISED -
PLOT SCALE = 1"=10'	CHECKED - TH	REVISED -
PLOT DATE = 10/16/2014	DATE - 10/16/14	REVISED -

STATE OF ILLINOIS
DEPARTMENT OF TRANSPORTATION

CROSS SECTIONS
US ROUTE 30

SCALE: 1"=10' | SHEET 32 OF 39 SHEETS | STA. 166+00.00 TO STA. 168+00.00

F.A.U. RTE.	SECTION	COUNTY	TOTAL SHEETS	SHEET NO.
573	30-N(13)	KANE	219	199

CONTRACT NO. 60X70

ILLINOIS FED. AID PROJECT

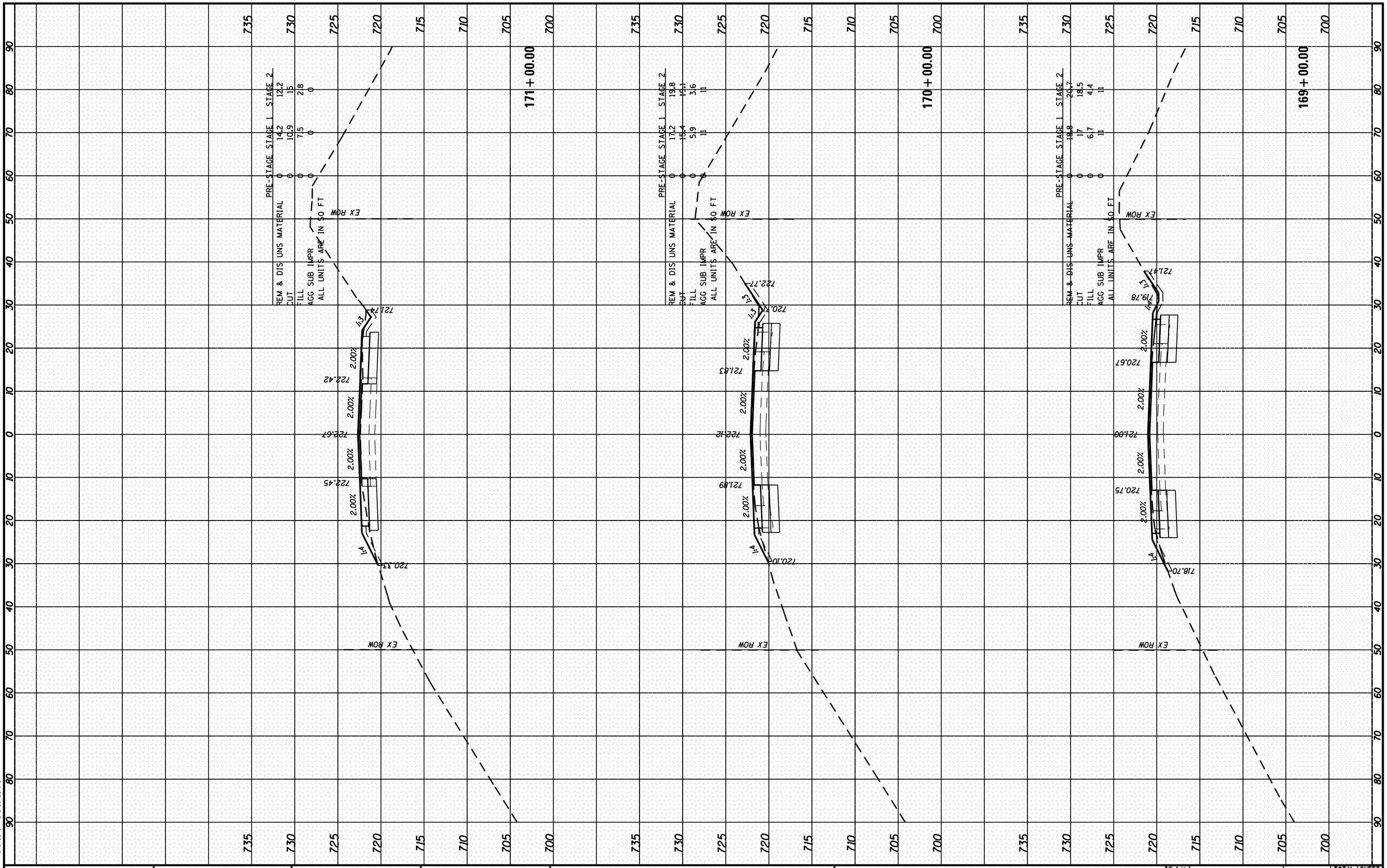

ORIGINAL SURVEY	BY	DATE
SURVEYED		
PLOTTED		
TEMPLATE		
AREAS		
AREAS CHECKED		
NOTE BOOK NO.		

FINAL SURVEY	BY	DATE
SURVEYED		
PLOTTED		
TEMPLATE		
AREAS		
AREAS CHECKED		
NOTE BOOK NO.		

COMPANY NAME: HRGreen
PROJECT CONTACT: Chris Ellis
DATE PLOTTED: 10/16/2014 8:34:39 AM
FILE NAME: P9120113-sht-xsc-US30.dgn
PLOT DRIVER: pdf.pltr
PEN TABLE: standard-trans-screen.tbl

HRGreen.com
Illinois Professional Design Firm
184-001322

USER NAME = dstancz	DESIGNED - JRM	REVISED -
FILE NAME = P9120113-sht-xsc-US30.dgn	DRAWN - DS	REVISED -
PLOT SCALE = 1"=10'	CHECKED - TH	REVISED -
PLOT DATE = 10/16/2014	DATE - 10/16/14	REVISED -

STATE OF ILLINOIS
DEPARTMENT OF TRANSPORTATION

CROSS SECTIONS
US ROUTE 30

SCALE: 1"=10' | SHEET 33 OF 39 SHEETS | STA. 169+00.00 TO STA. 171+00.00

F.A.U. RTE.	SECTION	COUNTY	TOTAL SHEETS	SHEET NO.
573	30-N(13)	KANE	219	200

CONTRACT NO. 60X70

ILLINOIS FED. AID PROJECT

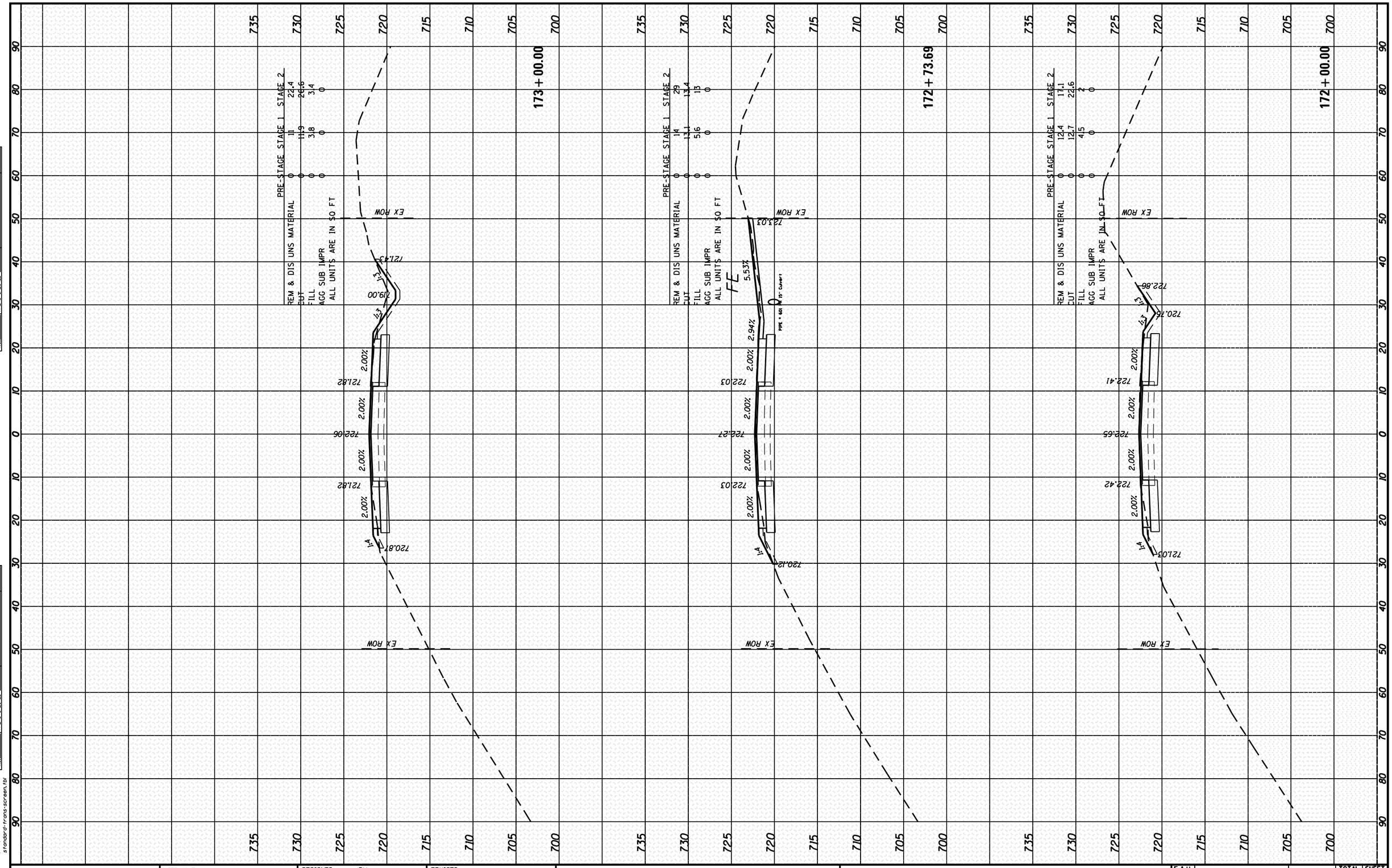

FINAL SURVEY		BY	DATE
NOTE BOOK	SURVEYED		
	PLOTTED		
	TEMPLATE		
	AREAS		
	AREAS CHECKED		
NO.			

ORIGINAL SURVEY		BY	DATE
NOTE BOOK	SURVEYED		
	PLOTTED		
	TEMPLATE		
	AREAS		
	AREAS CHECKED		
NO.			

COMPANY NAME:
PROJECT CONTACT:
CLIENT:
DATE PLOTTED: 10/16/2014 8:34:50 AM
FILE NAME: P9120113-sht-xsc-US30.dgn
PLOT DRIVER: pdf.plt
PEN TABLE: standard-trans-screen.tbl

HRGreen.com
Illinois Professional Design Firm
184-001322

USER NAME = dstancz	DESIGNED - JRM	REVISED -	
FILE NAME = P9120113-sht-xsc-US30.dgn	DRAWN - DS	REVISED -	
PLOT SCALE = 1"=10'	CHECKED - TH	REVISED -	
PLOT DATE = 10/16/2014	DATE - 10/16/14	REVISED -	

STATE OF ILLINOIS
DEPARTMENT OF TRANSPORTATION

CROSS SECTIONS
US ROUTE 30

SCALE: 1"=10' | SHEET 34 OF 39 SHEETS | STA. 172+00.00 TO STA. 173+00.00

F.A.U. RTE.	SECTION	COUNTY	TOTAL SHEETS	SHEET NO.
573	30-N(13)	KANE	219	201

CONTRACT NO. 60X70

ILLINOIS FED. AID PROJECT

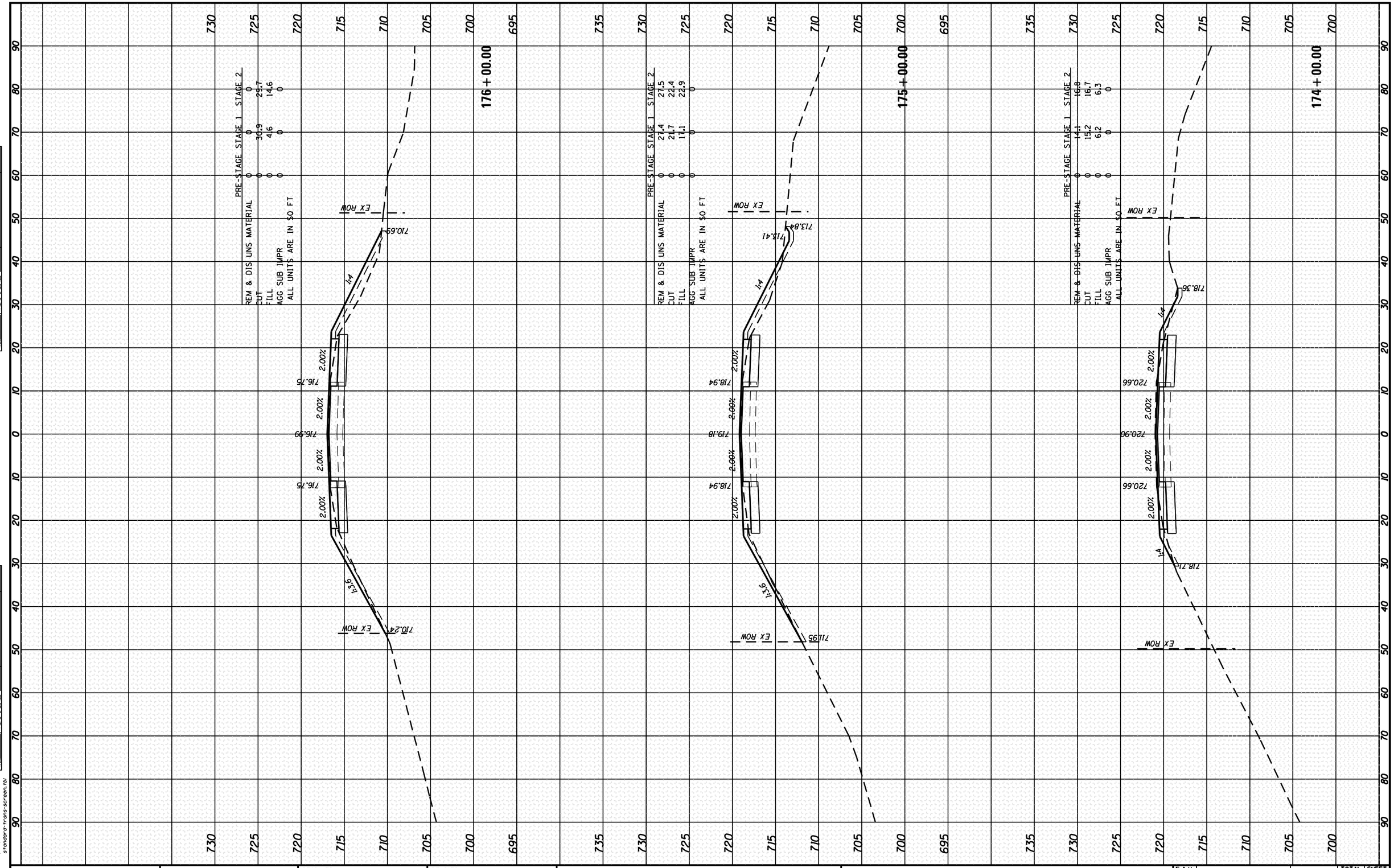

FINAL SURVEY	BY	DATE
SURVEYED		
PLOTTED		
TEMPLATE		
AREAS		
AREAS CHECKED		
NOTE BOOK		
NO.		

ORIGINAL SURVEY	BY	DATE
SURVEYED		
PLOTTED		
TEMPLATE		
AREAS		
AREAS CHECKED		
NOTE BOOK		
NO.		

COMPANY NAME:
PROJECT CONTACT:
CONTACT:
DATE PLOTTED: 10/16/2014 8:35:00 AM
FILE NAME: P9120113-sht-xsc-US30.dgn
PLOT DRIVER: pdf.pltr
PEN TABLE: standard-trans-screen.tbl

HRGreen.com
Illinois Professional Design Firm
184-001322

USER NAME = datenez	DESIGNED - JRM	REVISED -
FILE NAME = P9120113-sht-xsc-US30.dgn	DRAWN - DS	REVISED -
PLOT SCALE = 1"=10'	CHECKED - TH	REVISED -
PLOT DATE = 10/16/2014	DATE - 10/16/14	REVISED -

STATE OF ILLINOIS
DEPARTMENT OF TRANSPORTATION

CROSS SECTIONS
US ROUTE 30

SCALE: 1"=10' | SHEET 35 OF 39 SHEETS | STA. 174+00.00 TO STA. 176+00.00

F.A.U. RTE.	SECTION	COUNTY	TOTAL SHEETS	SHEET NO.
573	30-N(13)	KANE	219	202

CONTRACT NO. 60X70

ILLINOIS FED. AID PROJECT

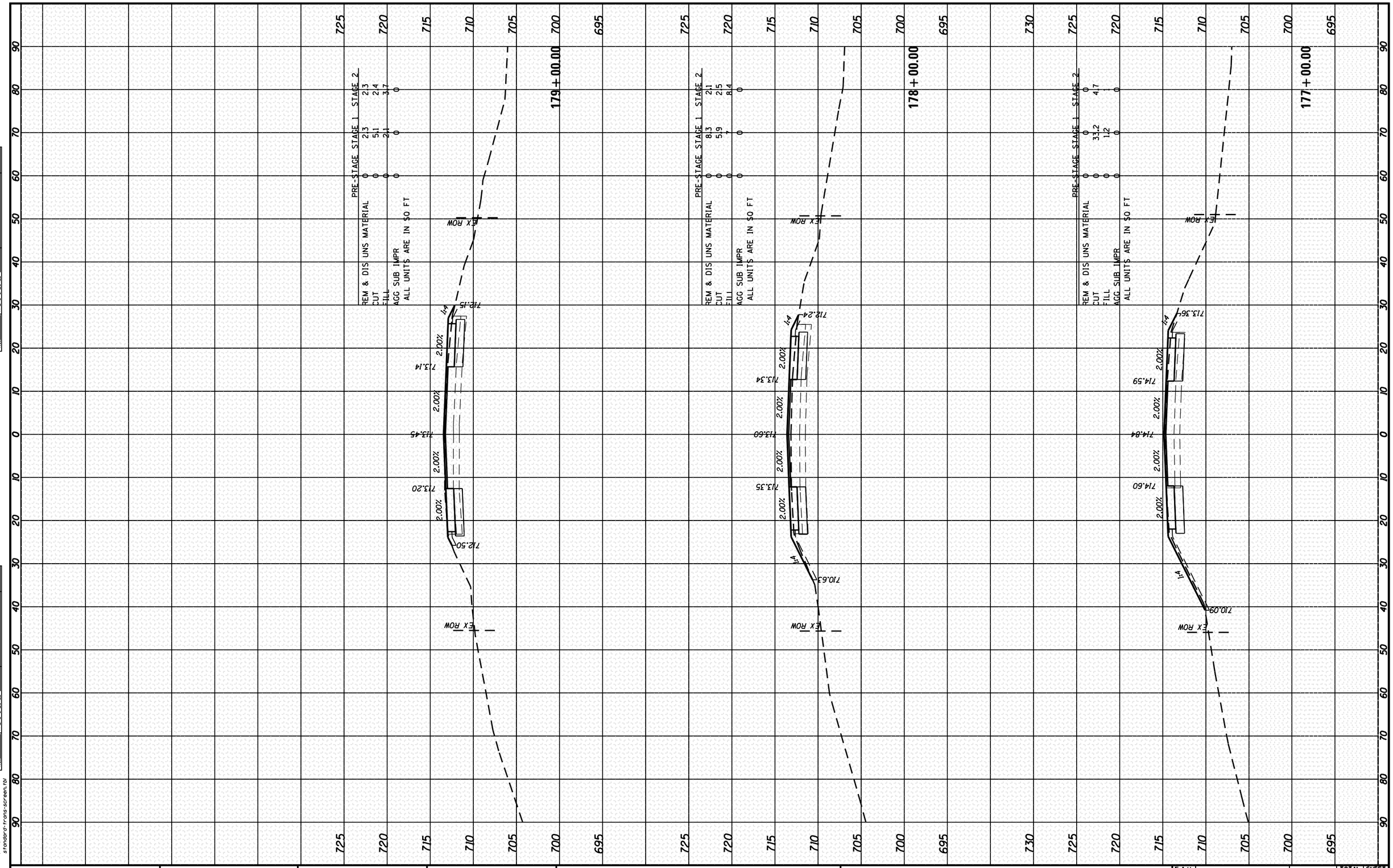

FINAL SURVEY	BY	DATE
SURVEYED		
PLOTTED		
TEMPLATE		
AREAS		
AREAS CHECKED		
NOTE BOOK NO.		

ORIGINAL SURVEY	BY	DATE
SURVEYED		
PLOTTED		
TEMPLATE		
AREAS		
AREAS CHECKED		
NOTE BOOK NO.		

COMPANY NAME: HRGreen
PROJECT CONTACT: Chris Ellis
DATE PLOTTED: 10/16/2014 8:35:09 AM
FILE NAME: P9120113-sht-xsc-US30.dgn
PLOT DRIVER: pdf.pltr
PEN TABLE: standard-trans-screen.tbl

HRGreen.com
Illinois Professional Design Firm
184-001322

USER NAME = dstancz	DESIGNED - JRM	REVISED -
FILE NAME = P9120113-sht-xsc-US30.dgn	DRAWN - DS	REVISED -
PLOT SCALE = 1"=10'	CHECKED - TH	REVISED -
PLOT DATE = 10/16/2014	DATE - 10/16/14	REVISED -

STATE OF ILLINOIS
DEPARTMENT OF TRANSPORTATION

CROSS SECTIONS
US ROUTE 30

SCALE: 1"=10' | SHEET 36 OF 39 SHEETS | STA. 177+00.00 TO STA. 179+00.00

F.A.U. RTE.	SECTION	COUNTY	TOTAL SHEETS	SHEET NO.
573	30-N(13)	KANE	219	203

CONTRACT NO. 60X70

ILLINOIS FED. AID PROJECT

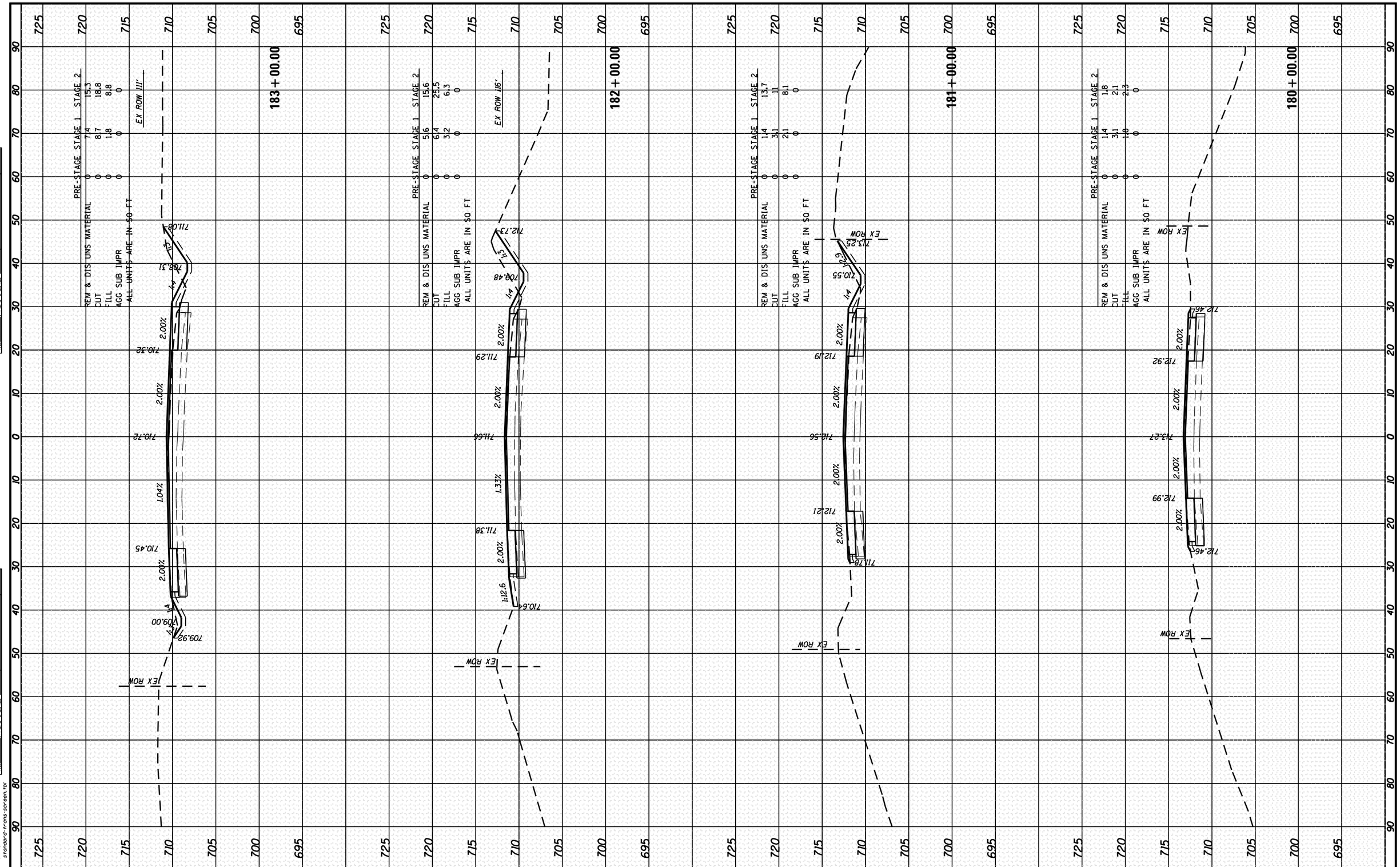

FINAL SURVEY	BY	DATE
SURVEYED		
PLOTTED		
TEMPLATE		
AREAS		
AREAS CHECKED		
NOTE BOOK		
NO.		

ORIGINAL SURVEY	BY	DATE
SURVEYED		
PLOTTED		
TEMPLATE		
AREAS		
AREAS CHECKED		
NOTE BOOK		
NO.		

COMPANY NAME: HRGreen
PROJECT CONTACT: Chris Ott
DATE PLOTTED: 10/16/2014 8:35:20 AM
FILE NAME: P9120113-sht-xsc-US30.dgn
PLOT DRIVER: pdf.plt
PEN TABLE: standard-trans-screen.tbl

HRGreen.com
Illinois Professional Design Firm
184-001322

USER NAME = dstancz	DESIGNED - JRM	REVISED -
FILE NAME = P9120113-sht-xsc-US30.dgn	DRAWN - DS	REVISED -
PLOT SCALE = 1"=10'	CHECKED - TH	REVISED -
PLOT DATE = 10/16/2014	DATE - 10/16/14	REVISED -

STATE OF ILLINOIS
DEPARTMENT OF TRANSPORTATION

CROSS SECTIONS
US ROUTE 30

SCALE: 1"=10' | SHEET 37 OF 39 SHEETS | STA. 180+00.00 TO STA. 183+00.00

F.A.U. RTE.	SECTION	COUNTY	TOTAL SHEETS	SHEET NO.
573	30-N(13)	KANE	219	204

CONTRACT NO. 60X70

ILLINOIS FED. AID PROJECT

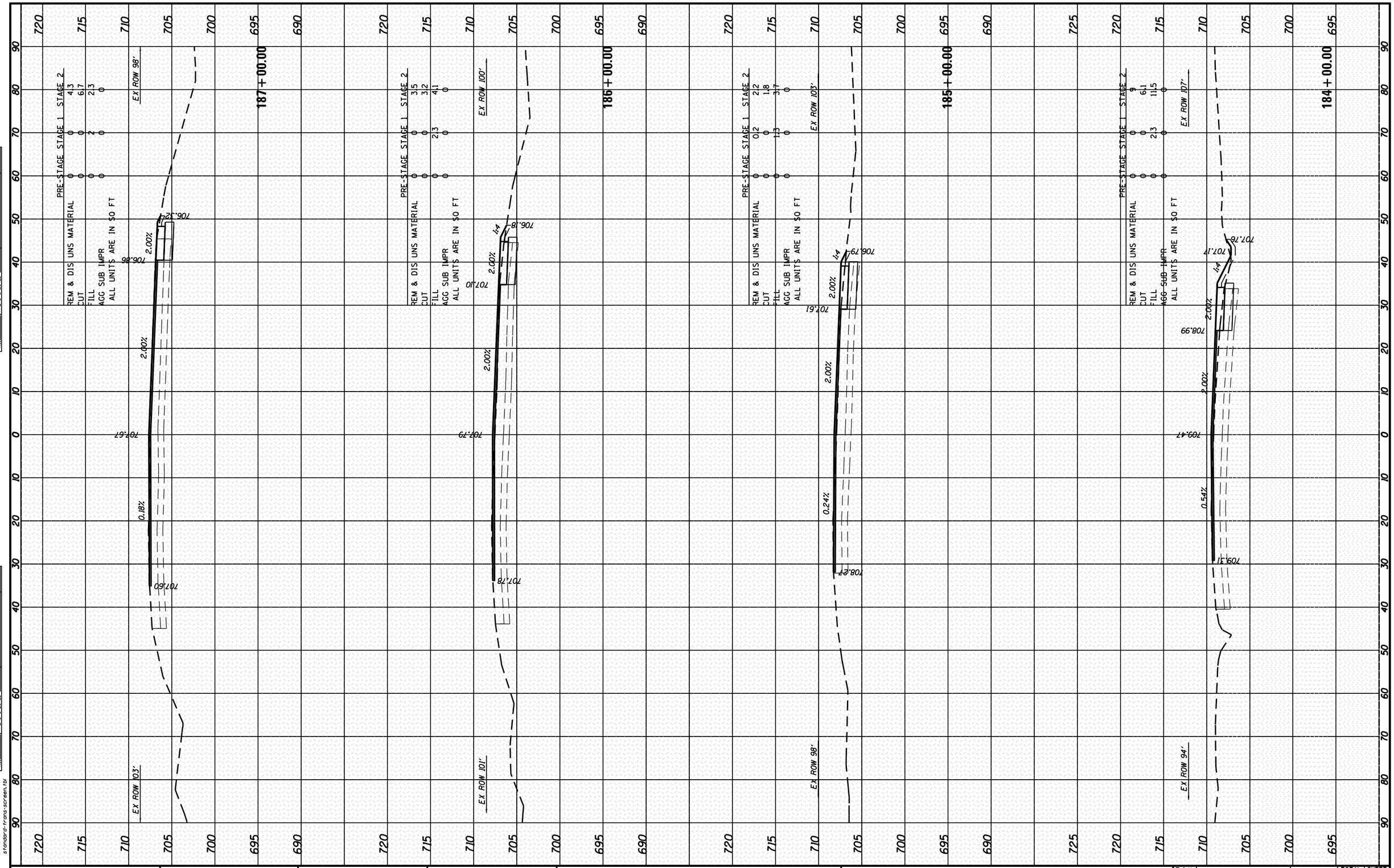

FINAL SURVEY	BY	DATE
SURVEYED		
PLOTTED		
TEMPLATE		
AREAS		
AREAS CHECKED		
NOTE BOOK NO.		

ORIGINAL SURVEY	BY	DATE
SURVEYED		
PLOTTED		
TEMPLATE		
AREAS		
AREAS CHECKED		
NOTE BOOK NO.		

COMPANY NAME:
PROJECT CONTACT:
CLIENT:
DATE PLOTTED: 10/16/2014 8:35:29 AM
FILE NAME: P9120113-sht-xsc-US30.dgn
PLOT DRIVER: pdf.plt
PEN TABLE: standard-trans-screen.tbl

HRGreen.com
Illinois Professional Design Firm
184-001322

USER NAME = dstencz	DESIGNED - JRM	REVISED -
FILE NAME = P9120113-sht-xsc-US30.dgn	DRAWN - DS	REVISED -
PLOT SCALE = 1"=10'	CHECKED - TH	REVISED -
PLOT DATE = 10/16/2014	DATE - 10/16/14	REVISED -

STATE OF ILLINOIS
DEPARTMENT OF TRANSPORTATION

CROSS SECTIONS
US ROUTE 30

SCALE: 1"=10' | SHEET 38 OF 39 SHEETS | STA. 184+00.00 TO STA. 187+00.00

F.A.U. RTE.	SECTION	COUNTY	TOTAL SHEETS	SHEET NO.
573	30-N(13)	KANE	219	205

CONTRACT NO. 60X70

ILLINOIS FED. AID PROJECT

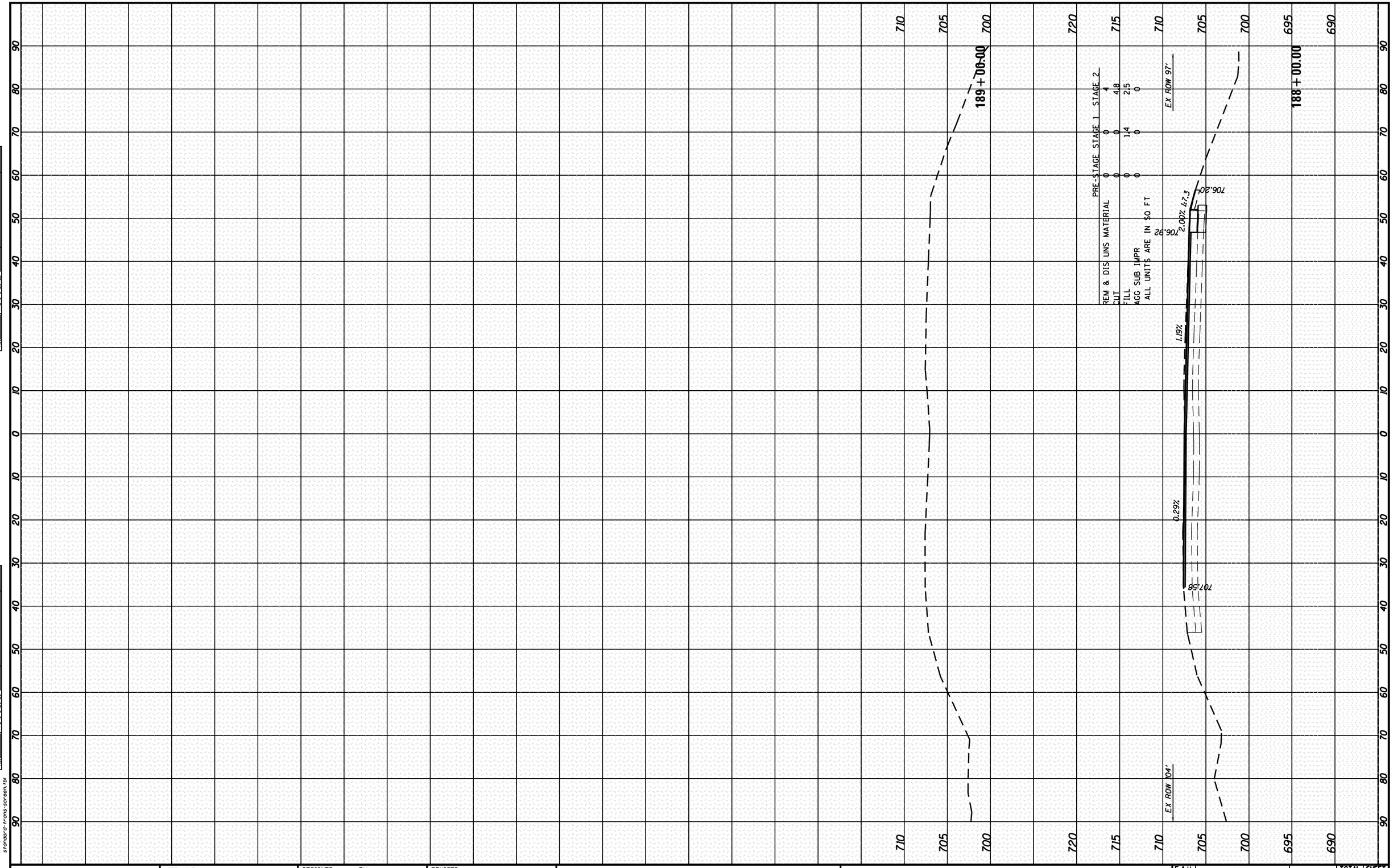

FINAL SURVEY		BY	DATE
NOTE BOOK	SURVEYED		
	PLOTTED		
	TEMPLATE		
	AREAS		
NO.	AREAS CHECKED		

ORIGINAL SURVEY		BY	DATE
NOTE BOOK	SURVEYED		
	PLOTTED		
	TEMPLATE		
	AREAS		
NO.	AREAS CHECKED		

COMPANY NAME:
PROJECT CONTACT:
CLIENT:
DATE PLOTTED: 10/16/2014 8:35:39 AM
FILE NAME: P9120113-sht-xsc-US30.dgn
PLOT DRIVER: pdf.plt
PEN TABLE: standard-trans-screen.tbl

HRGreen.com
Illinois Professional Design Firm
184-001322

USER NAME = dstencz	DESIGNED - JRM	REVISED -
FILE NAME = P9120113-sht-xsc-US30.dgn	DRAWN - DS	REVISED -
PLOT SCALE = 1"=10'	CHECKED - TH	REVISED -
PLOT DATE = 10/16/2014	DATE - 10/16/14	REVISED -

STATE OF ILLINOIS
DEPARTMENT OF TRANSPORTATION

CROSS SECTIONS
US ROUTE 30

SCALE: 1"=10' | SHEET 39 OF 39 SHEETS | STA. 188+00.00 TO STA. 189+00.00

F.A.U. RTE.	SECTION	COUNTY	TOTAL SHEETS	SHEET NO.
573	30-N(13)	KANE	219	206

CONTRACT NO. 60X70

ILLINOIS FED. AID PROJECT

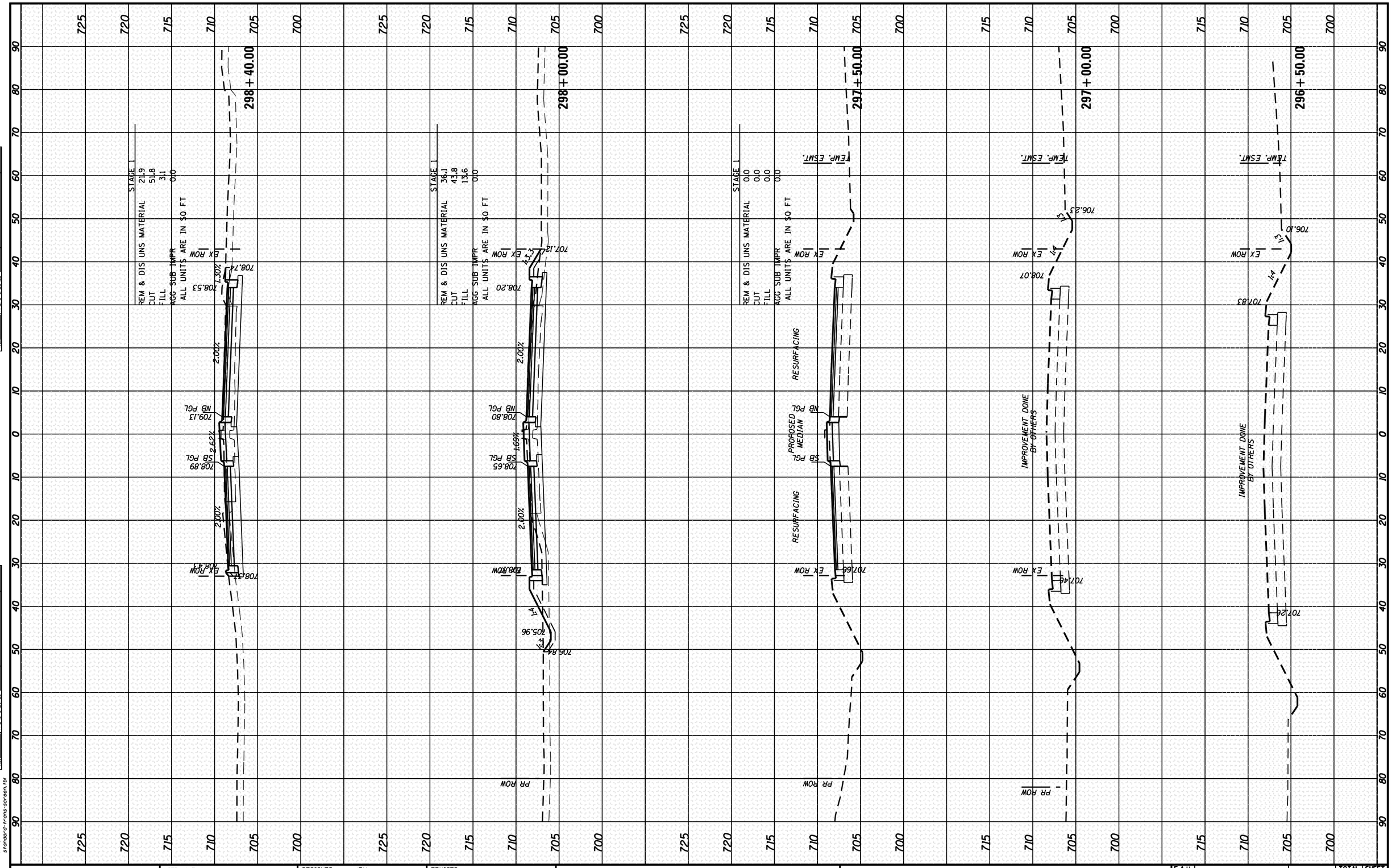

FINAL SURVEY	BY	DATE
SURVEYED		
PLOTTED		
TEMPLATE		
AREAS		
AREAS CHECKED		
NOTE BOOK NO.		

ORIGINAL SURVEY	BY	DATE
SURVEYED		
PLOTTED		
TEMPLATE		
AREAS		
AREAS CHECKED		
NOTE BOOK NO.		

COMPANY NAME:
PROJECT CONTACT:
CLIENT:
DATE PLOTTED: 10/16/2014 8:35:52 AM
FILE NAME: P9120113-sht-xsc-DUGANSTH.dgn
PLOT DRIVER: pdf.plt
PEN TABLE: standard-trans-screen.tbl

HRGreen.com
Illinois Professional Design Firm
184-001322

USER NAME = dstencz	DESIGNED - JRM	REVISED -
FILE NAME = P9120113-sht-xsc-DUGANSTH.dgn	DRAWN - DS	REVISED -
PLOT SCALE = 1"=10'	CHECKED - TH	REVISED -
PLOT DATE = 10/16/2014	DATE - 10/16/14	REVISED -

STATE OF ILLINOIS
DEPARTMENT OF TRANSPORTATION

CROSS SECTIONS
DUGAN ROAD SOUTH

SCALE: 1"=10' | SHEET 1 OF 5 SHEETS | STA. 296+50.00 TO STA. 298+40.00

F.A.U. RTE.	SECTION	COUNTY	TOTAL SHEETS	SHEET NO.
573	30-N(13)	KANE	219	207

CONTRACT NO. 60X70

ILLINOIS FED. AID PROJECT

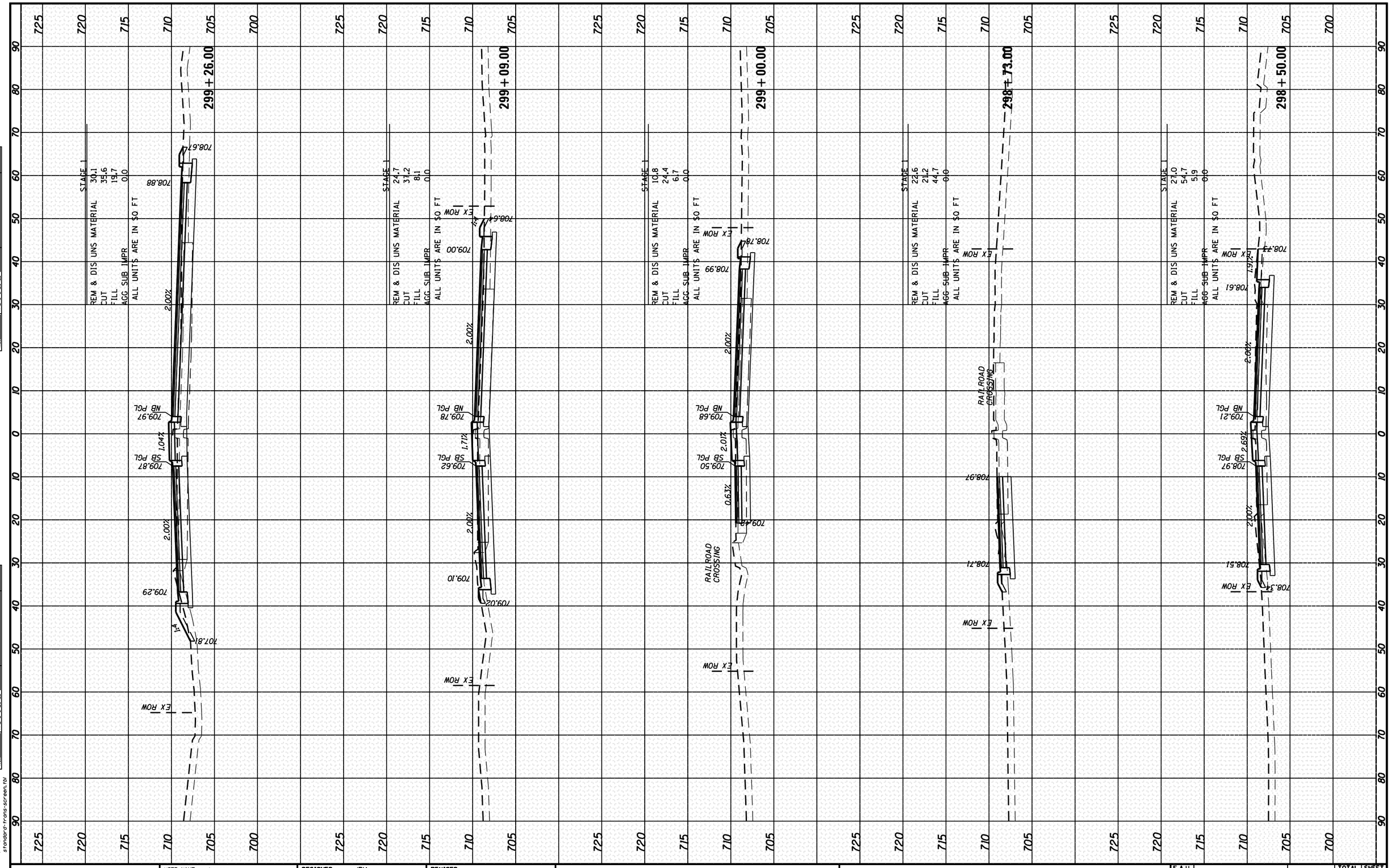

FINAL SURVEY	BY	DATE
SURVEYED		
PLOTTED		
TEMPLATE		
AREAS		
AREAS CHECKED		
NOTE BOOK NO.		

ORIGINAL SURVEY	BY	DATE
SURVEYED		
PLOTTED		
TEMPLATE		
AREAS		
AREAS CHECKED		
NOTE BOOK NO.		

COMPANY NAME:
PROJECT CONTACT:
CLIENT:
DATE PLOTTED: 10/16/2014 8:36:03 AM
FILE NAME: P9120113-sht-xsc-DUGANSTH.dgn
PLOT DRIVER: pdf.plt
PEN TABLE: standard-trans-screen.tbl

HRGreen.com
Illinois Professional Design Firm
184-001322

USER NAME = dstancz	DESIGNED - JRM	REVISED -
FILE NAME = P9120113-sht-xsc-DUGANSTH.dgn	DRAWN - DS	REVISED -
PLOT SCALE = 1"=10'	CHECKED - TH	REVISED -
PLOT DATE = 10/16/2014	DATE - 10/16/14	REVISED -

STATE OF ILLINOIS
DEPARTMENT OF TRANSPORTATION

CROSS SECTIONS
DUGAN ROAD SOUTH

SCALE: 1"=10' | SHEET 2 OF 5 SHEETS | STA. 298+50.00 TO STA. 299+26.00

F.A.U. RTE.	SECTION	COUNTY	TOTAL SHEETS	SHEET NO.
573	30-N(13)	KANE	219	208

CONTRACT NO. 60X70

ILLINOIS FED. AID PROJECT

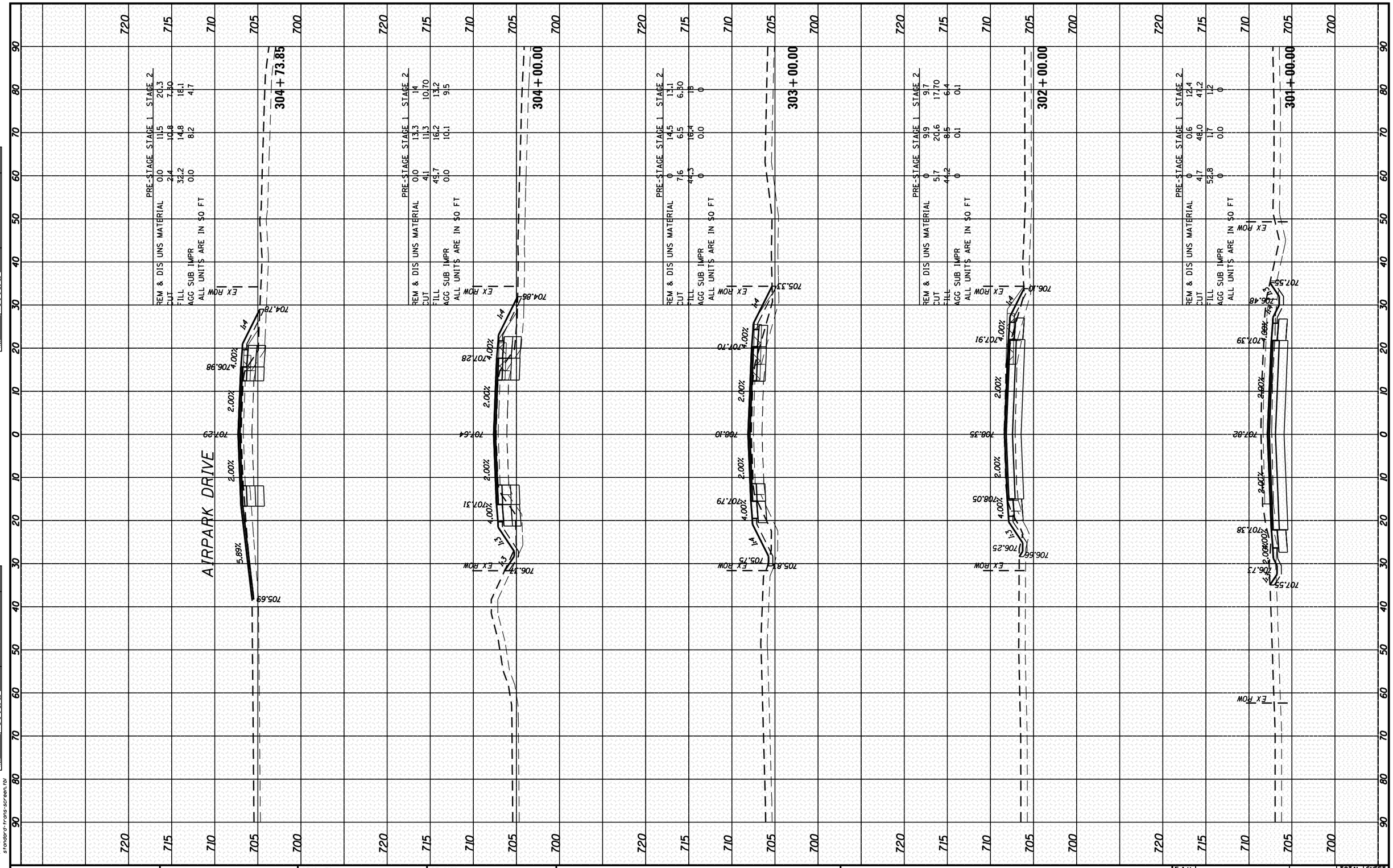

FINAL SURVEY	BY	DATE
SURVEYED		
PLOTTED		
TEMPLATE		
AREAS		
AREAS CHECKED		
NOTE BOOK		
NO.		

ORIGINAL SURVEY	BY	DATE
SURVEYED		
PLOTTED		
TEMPLATE		
AREAS		
AREAS CHECKED		
NOTE BOOK		
NO.		

COMPANY NAME:
PROJECT CONTACT:
CREATED:
DATE PLOTTED: 10/16/2014 8:36:16 AM
FILE NAME: P9120113-sht-xsc-DUGANNTH.dgn
PLOT DRIVER: pdf.plt
PEN TABLE: standard-trans-screen.tbl

HRGreen.com
Illinois Professional Design Firm
184-001322

USER NAME = datencz	DESIGNED - JRM	REVISED -
FILE NAME = P9120113-sht-xsc-DUGANNTH.dgn	DRAWN - DS	REVISED -
PLOT SCALE = 1"=10'	CHECKED - TH	REVISED -
PLOT DATE = 10/16/2014	DATE - 10/16/14	REVISED -

STATE OF ILLINOIS
DEPARTMENT OF TRANSPORTATION

CROSS SECTIONS
DUGAN ROAD NORTH

SCALE: 1"=10' | SHEET 3 OF 5 SHEETS | STA. 301+00.00 TO STA. 304+73.85

F.A.U. RTE.	SECTION	COUNTY	TOTAL SHEETS	SHEET NO.
573	30-N(13)	KANE	219	209

CONTRACT NO. 60X70

ILLINOIS FED. AID PROJECT

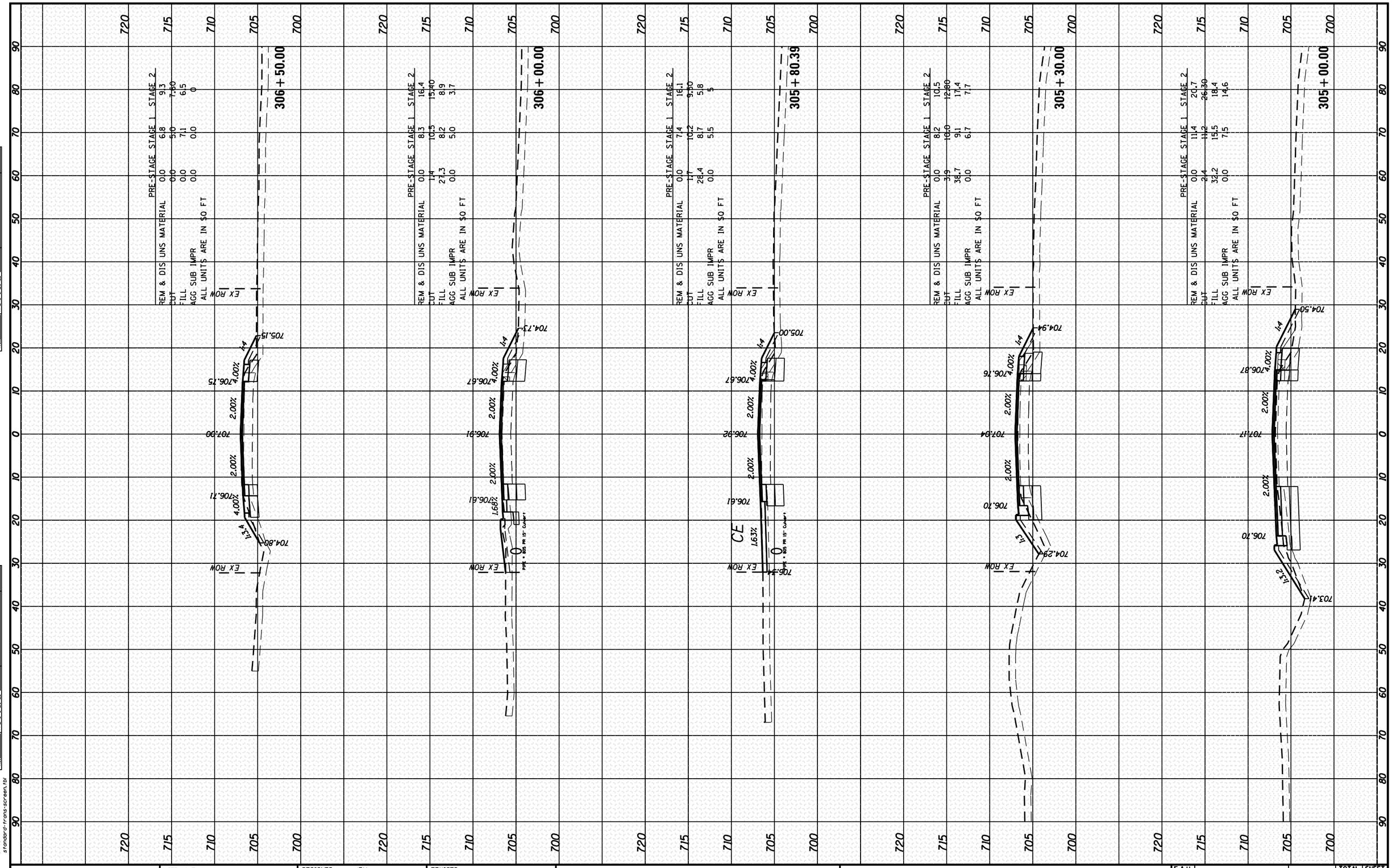

FINAL SURVEY	BY	DATE
SURVEYED		
PLOTTED		
TEMPLATE		
AREAS		
AREAS CHECKED		
NOTE BOOK		
NO.		

ORIGINAL SURVEY	BY	DATE
SURVEYED		
PLOTTED		
TEMPLATE		
AREAS		
AREAS CHECKED		
NOTE BOOK		
NO.		

COMPANY NAME:
PROJECT CONTACT:
CLIENT:
DATE PLOTTED: 10/16/2014 8:36:28 AM
FILE NAME: P9120113-sht-xsc-DUGANNTH.dgn
PLOT DRIVER: pdf.plt
PEN TABLE: standard-trans-screen.tbl

HRGreen.com
Illinois Professional Design Firm
184-001322

USER NAME = dstencz	DESIGNED - JRM	REVISED -
FILE NAME = P9120113-sht-xsc-DUGANNTH.dgn	DRAWN - DS	REVISED -
PLOT SCALE = 1"=10'	CHECKED - TH	REVISED -
PLOT DATE = 10/16/2014	DATE - 10/16/14	REVISED -

STATE OF ILLINOIS
DEPARTMENT OF TRANSPORTATION

CROSS SECTIONS
DUGAN ROAD NORTH

SCALE: 1"=10' | SHEET 4 OF 5 SHEETS | STA. 305+00.00 TO STA. 306+50.00

F.A.U. RTE.	SECTION	COUNTY	TOTAL SHEETS	SHEET NO.
573	30-N(13)	KANE	219	210

CONTRACT NO. 60X70

ILLINOIS FED. AID PROJECT

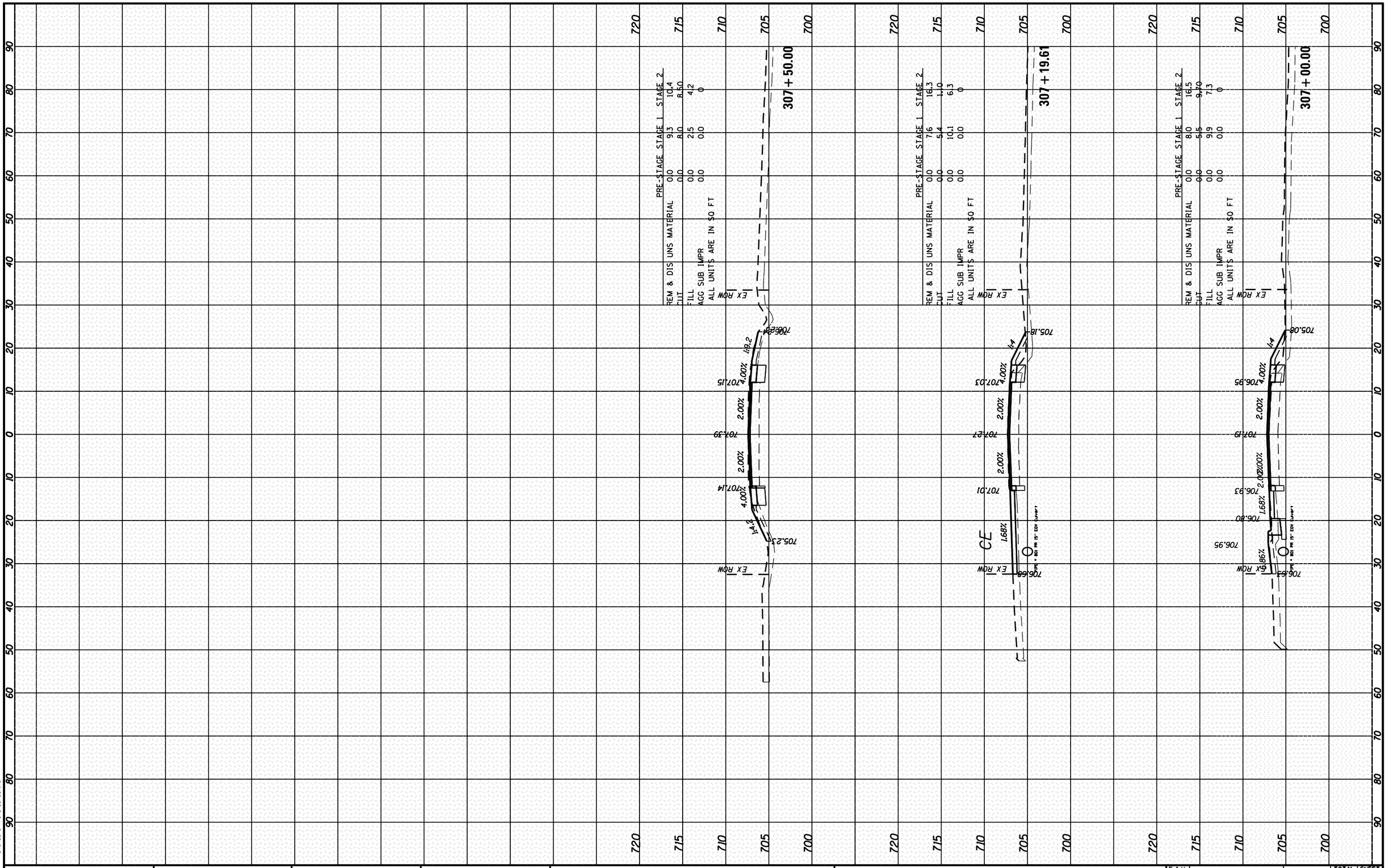

FINAL SURVEY		BY	DATE
NOTE BOOK	SURVEYED		
	PLOTTED		
	TEMPLATE		
	AREAS		
NO.	AREAS CHECKED		

ORIGINAL SURVEY		BY	DATE
NOTE BOOK	SURVEYED		
	PLOTTED		
	TEMPLATE		
	AREAS		
NO.	AREAS CHECKED		

COMPANY NAME:
PROJECT CONTACT:
CREATED:
DATE PLOTTED: 10/16/2014 8:36:38 AM
FILE NAME: P9120113-sht-xsc-DUGANNTH.dgn
PLOT DRIVER: pdf.plt
PEN TABLE: standard-trans-screen.tbl

HRGreen.com
Illinois Professional Design Firm
184-001322

USER NAME = datencz	DESIGNED - JRM	REVISED -
FILE NAME = P9120113-sht-xsc-DUGANNTH.dgn	DRAWN - DS	REVISED -
PLOT SCALE = 1"=10'	CHECKED - TH	REVISED -
PLOT DATE = 10/16/2014	DATE - 10/16/14	REVISED -

STATE OF ILLINOIS
DEPARTMENT OF TRANSPORTATION

CROSS SECTIONS
DUGAN ROAD NORTH

SCALE: 1"=10' | SHEET 5 OF 5 SHEETS | STA. 307+00.00 TO STA. 307+50.00

F.A.U. RTE.	SECTION	COUNTY	TOTAL SHEETS	SHEET NO.
573	30-N(13)	KANE	219	211

CONTRACT NO. 60X70

ILLINOIS FED. AID PROJECT

STATE OF ILLINOIS
DEPARTMENT OF TRANSPORTATION
DIVISION OF HIGHWAYS

PLAT OF HIGHWAYS

ROUTE: FAP 573 US ROUTE 30
SECTION:
COUNTY: KANE
LIMITS: AT DUGAN ROAD
JOB NO.: R–91–004–14

PARCEL NUMBER	OWNER	SHEET NUMBER	PROPERTY ACQUIRED BY
1KX0001	OLD SECOND BANK TRUST NUMBER 7360	2	
1KX0002	GARY & JUDITH HATTERSLEY TRUST	5	
1KX0003 1KX0003TE	SCOT INDUSTRIES, INC.	3 & 4	
1KX0004 1KX0004TE	HOORELBEK INVESTMENTS, LLC. AN ILLINOIS LIMITED LIABILITY COMPANY	6	
1KX0005 1KX0005TE	ADVANCED INSTALLATION CONCEPTS, INC. AN ILLINOIS CORPORATION	6	
1KX0006 1KX0006TE	RICHARD F. COWEN & GAIL A. COWEN, HUSBAND & WIFE, AS JOINT TENANTS	7	
1KX0007 1KX0007TE	J.T. COMMERCIAL ENTERPRISES, L.L.C.	7	
1KX0008 1KX0008TE	RNSL PROPERTIES, LLC, AN ILLINOIS LIMITED LIABILITY COMPANY	8	
1KX0009 1KX0009TE	JOANNE M. ABEL AND ROBERT TROY COZAD, AS JOINT TENANTS	8	

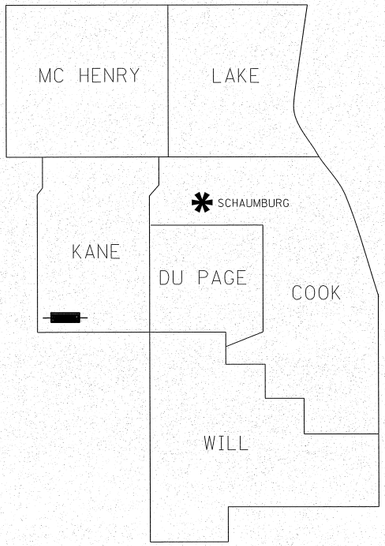

DISTRICT HEADQUARTERS: –
LOCATION OF SECTION INDICATED THUS: –

PRINTED BY THE AUTHORITY OF THE STATE OF ILLINOIS

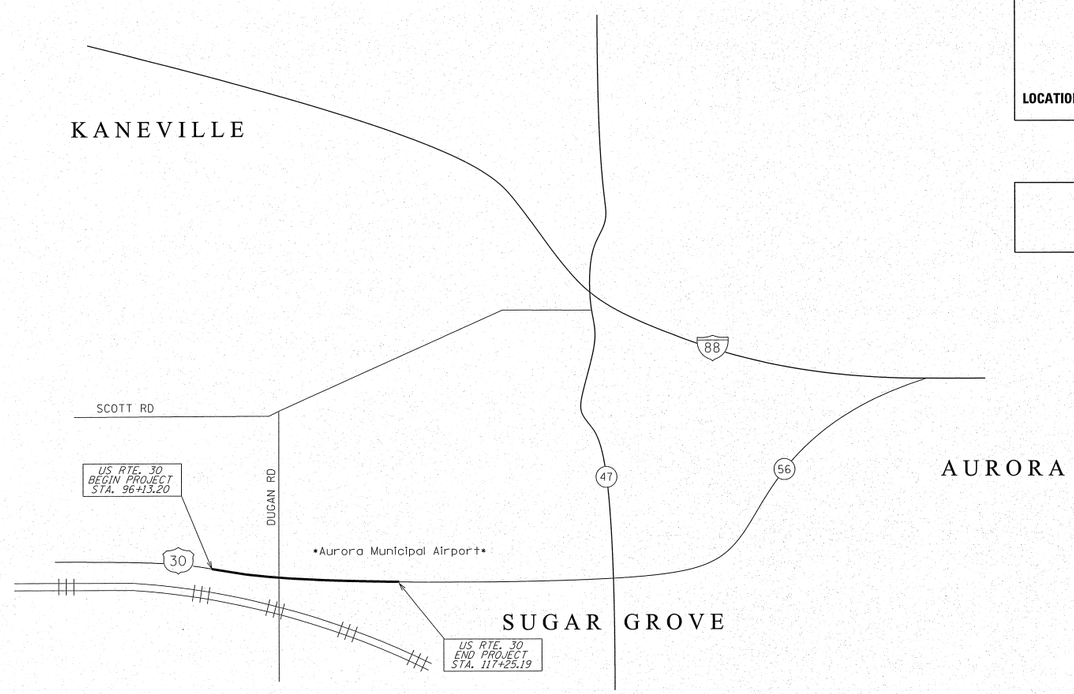

LOCATION MAP

GROSS LENGTH = 2111.99 FT. = 0.400 MILE

Ruettiger, Tonelli & Associates, Inc.
Surveyors • Engineers • Planners • Landscape Architects • G.I.S. Consultants
129 CAPISTA DRIVE - SHOREWOOD, ILLINOIS 60404
PH. (815) 744-6600 FAX (815) 744-0101
website: www.ruettigertonelli.com

R.T. & A. Dwg. No.: 2013-1130

IDOT USE ONLY
SS
RECEIVED
FEB 04 2014
PLATS & LEGALS

PART OF THE NE.1/4 OF SECTION 24 AND THE SE.1/4 OF SECTION 13, TWP. 38 N., R. 6 E. OF THE 3RD. P.M., IN KANE COUNTY, ILLINOIS.

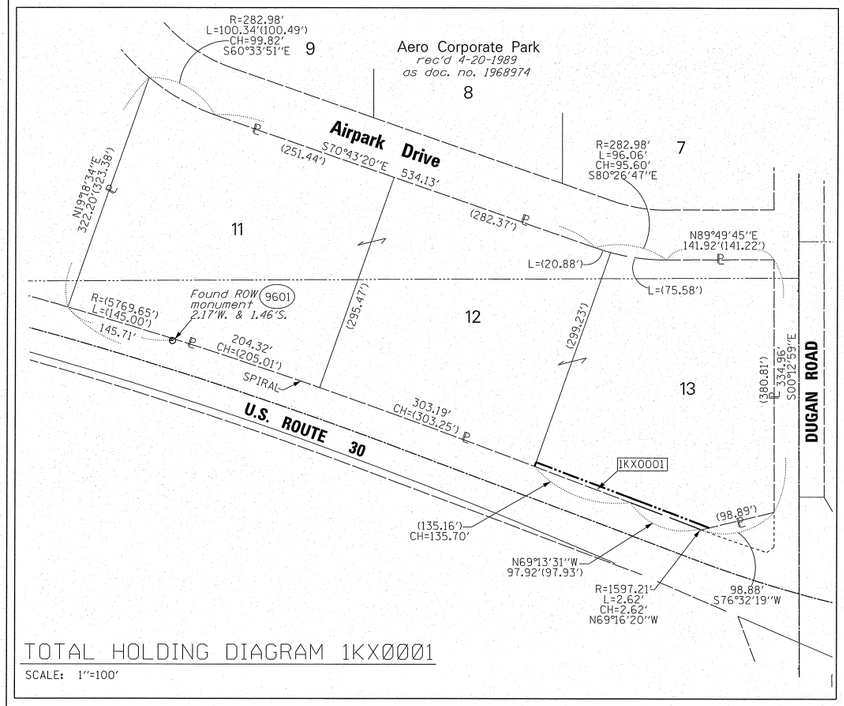

TOTAL HOLDING DIAGRAM 1KX0001

SCALE: 1"=100'

NOTES:

1. ALL DIMENSIONS ARE MEASURED UNLESS OTHERWISE SPECIFIED.

2. BEARINGS AND DISTANCES SHOWN HEREON REFERENCE THE ILLINOIS STATE PLANE COORDINATE SYSTEM EAST ZONE, NORTH AMERICAN DATUM OF 1983 (2007 ADJUSTMENT) "GRID".

3. ALL MEASURED AND CALCULATED DISTANCES ARE "GRID" NOT "GROUND". TO OBTAIN GROUND DISTANCES, DIVIDE GRID DISTANCES SHOWN BY THE COMBINATION FACTOR OF 0.9999432656.

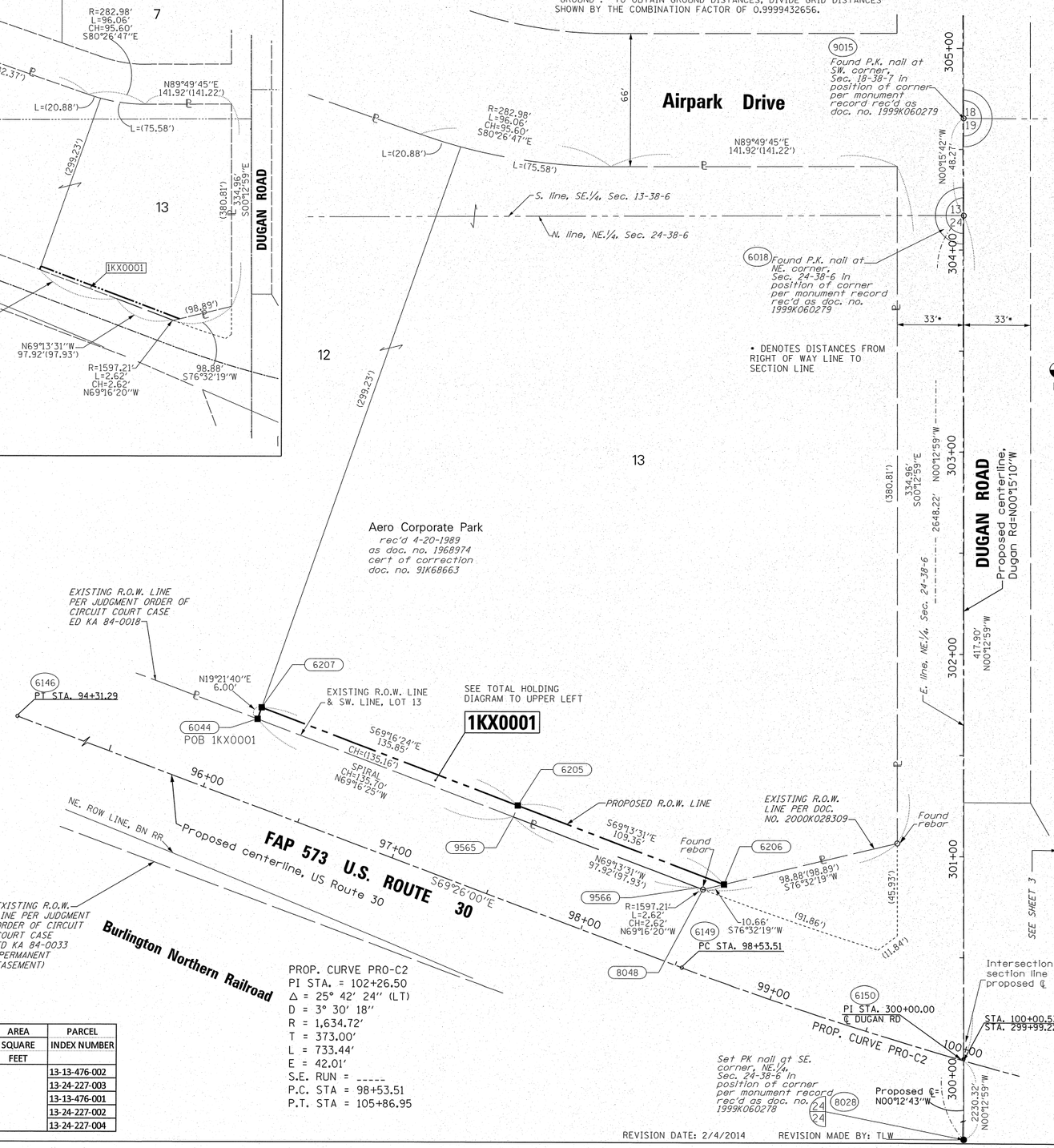

PROP. CURVE PRO-C2
PI STA. = 102+26.50
Δ = 25° 42' 24" (LT)
D = 3° 30' 18"
R = 1,634.72'
T = 373.00'
L = 733.44'
E = 42.01'
S.E. RUN = -----
P.C. STA = 98+53.51
P.T. STA = 105+86.95

PROJECT COORDINATES					
Illinois State Plane, East Zone, NAD 83 (2007)					
US 30					
Pt. Number	Station	Offset		Northing	Easting
6044	96+13.33	40.67	LT.	1856680.128	941401.154
6146	94+31.29	0.00	RT.	1856706.003	941216.436
6149	98+53.51	0.00	RT.	1856557.680	941611.740
6205	97+49.05	46.29	LT.	1856637.713	941530.199
6206	98+58.55	45.88	LT.	1856598.923	941632.450
6207	96+13.20	46.67	LT.	1856685.791	941403.144
6289	100+00.53	0.00	RT.	1856512.285	941751.533
6290	100+00.66	0.00	RT.	1856512.253	941751.650
8048	98+49.57	39.92	LT.	1856596.442	941622.082
9565	97+49.03	40.29	LT.	1856632.103	941528.071
9566	98+46.95	39.93	LT.	1856597.370	941619.628
DUGAN ROAD					
Pt. Number	Station	Offset		Northing	Easting
6018	304+17.10	0.38	RT.	1856930.156	941750.071
6150	300+00.00	0.00	RT.	1856513.062	941751.530
6289	299+99.22	0.00	RT.	1856512.285	941751.533
8028				1854281.953	941760.074
9015	304+65.37	0.37	RT.	1856978.426	941749.851

PARCEL NUMBER	TOTAL HOLDING ACRES	PART TAKEN ACRES	AREA IN EXISTING R.O.W. ACRES	REMAINDER AREA ACRES	EASEMENT ACRES	AREA SQUARE FEET	PARCEL INDEX NUMBER
1KX0001	6.550	0.033	0.000	6.517			13-13-476-002
							13-24-227-003
							13-13-476-001
							13-24-227-002
							13-24-227-004

LEGEND

SECTION CORNER

QUARTER SECTION CORNER

GRAPHIC SCALE FEET

SCALE: 1"= 30'

SECTION / QUARTER SECTION LINE
PLATTED LOT LINES
PROPERTY (DEED) LINE
APPARENT PROPERTY LINE
EXISTING CENTERLINE
PROPOSED CENTERLINE
EXISTING RIGHT OF WAY LINE
PROPOSED RIGHT OF WAY LINE
EXISTING EASEMENT
PROPOSED EASEMENT
EXISTING ACCESS CONTROL LINE
PROPOSED ACCESS CONTROL LINE
MEASURED DIMENSION
COMPUTED DIMENSION
RECORDED DIMENSION
EXISTING BUILDING

IRON PIPE OR ROD FOUND
CUT CROSS FOUND OR SET
"MAG" NAIL SET
5 / 8" REBAR SET

STAKING OF PROPOSED RIGHT OF WAY. SET DIVISION OF HIGHWAYS SURVEY MARKER TO MONUMENT THE POSITION SHOWN. IDENTIFIED BY INSCRIPTION DATA AND SURVEYORS REGISTRATION NUMBER.

STAKING OF PROPOSED RIGHT OF WAY IN CULTIVATED AREAS. BURIED 5/8 INCH METAL ROD 20 INCHES BELOW GROUND TO MARK FUTURE SURVEY MARKER POSITION IDENTIFIED BY COLORED PLASTIC CAP BEARING SURVEYORS REGISTRATION NUMBER.

PERMANENT SURVEY MARKER, I.D.O.T. STANDARD 2135 (TO BE SET BY OTHERS)

RIGHT OF WAY STAKING PROPOSED TO BE SET

STATE OF ILLINOIS)
)SS
COUNTY OF WILL)

THIS IS TO CERTIFY THAT I, KENNETH J. PESAVENTO, AN ILLINOIS PROFESSIONAL LAND SURVEYOR, (WE, RUETTIGER, TONELLI & ASSOCIATES AN ILLINOIS PROFESSIONAL DESIGN FIRM LAND SURVEYING CORPORATION, NUMBER 184-001251,) HAVE SURVEYED THE PLAT OF HIGHWAYS SHOWN HEREON IN SECTIONS 13 & 24, TOWNSHIP 38 NORTH, RANGE 6 EAST OF THE THIRD PRINCIPAL MERIDIAN, KANE COUNTY, THAT THE SURVEY IS TRUE AND COMPLETE AS SHOWN TO THE BEST OF MY KNOWLEDGE AND BELIEF, THAT THE PLAT CORRECTLY REPRESENTS SAID SURVEY, THAT ALL MONUMENTS FOUND AND ESTABLISHED ARE OF PERMANENT QUALITY AND OCCUPY THE POSITIONS SHOWN THEREON AND THAT THE MONUMENTS ARE SUFFICIENT TO ENABLE THE SURVEY TO BE RETRACED, MADE FOR THE DEPARTMENT OF TRANSPORTATION, STATE OF ILLINOIS.

DATED AT_____, ILLINOIS THIS __ DAY OF_____ 20 __ A.D.

_____
ILLINOIS PROFESSIONAL LAND SURVEYOR NO. 3425
LICENSE EXPIRATION DATE: 11-30-2014

THIS PROFESSIONAL SERVICE CONFORMS TO THE CURRENT ILLINOIS MINIMUM STANDARDS FOR A BOUNDARY SURVEY.

Ruettiger, Tonelli & Associates, Inc.
Surveyors • Engineers • Planners • Landscape Architects • G.I.S. Consultants
129 CAPISTA DRIVE - SHOREWOOD, ILLINOIS 60404
PH. (815) 744-6600 FAX (815) 744-0101
website: www.ruettigertonelli.com

R.T. & A. Dwg. No.: 2013-1130

PLAT OF HIGHWAYS

STATE OF ILLINOIS
DEPARTMENT OF TRANSPORTATION
FAP 573 U.S. ROUTE 30

LIMITS: AT DUGAN RD. COUNTY: KANE
SECTION: JOB NO.: R-91-004-14
STA. 95+50 TO STA. 100+00
SCALE: 1"=30' SHEET 2 OF 8 SHEETS

IDOT USE ONLY
SS
RECEIVED
FEB 0 4 2014
PLATS & LEGALS

BUREAU OF LAND ACQUISITION
201 WEST CENTER COURT
SCHAUMBURG, ILLINOIS 60196

REVISION DATE: 2/4/2014 REVISION MADE BY: TLW

PART OF THE SW.1/4 OF SECTION 18 AND THE NW.1/4 OF SECTION 19, TWP. 38 N., R. 7 E. OF THE 3RD. P.M., IN KANE COUNTY, ILLINOIS.

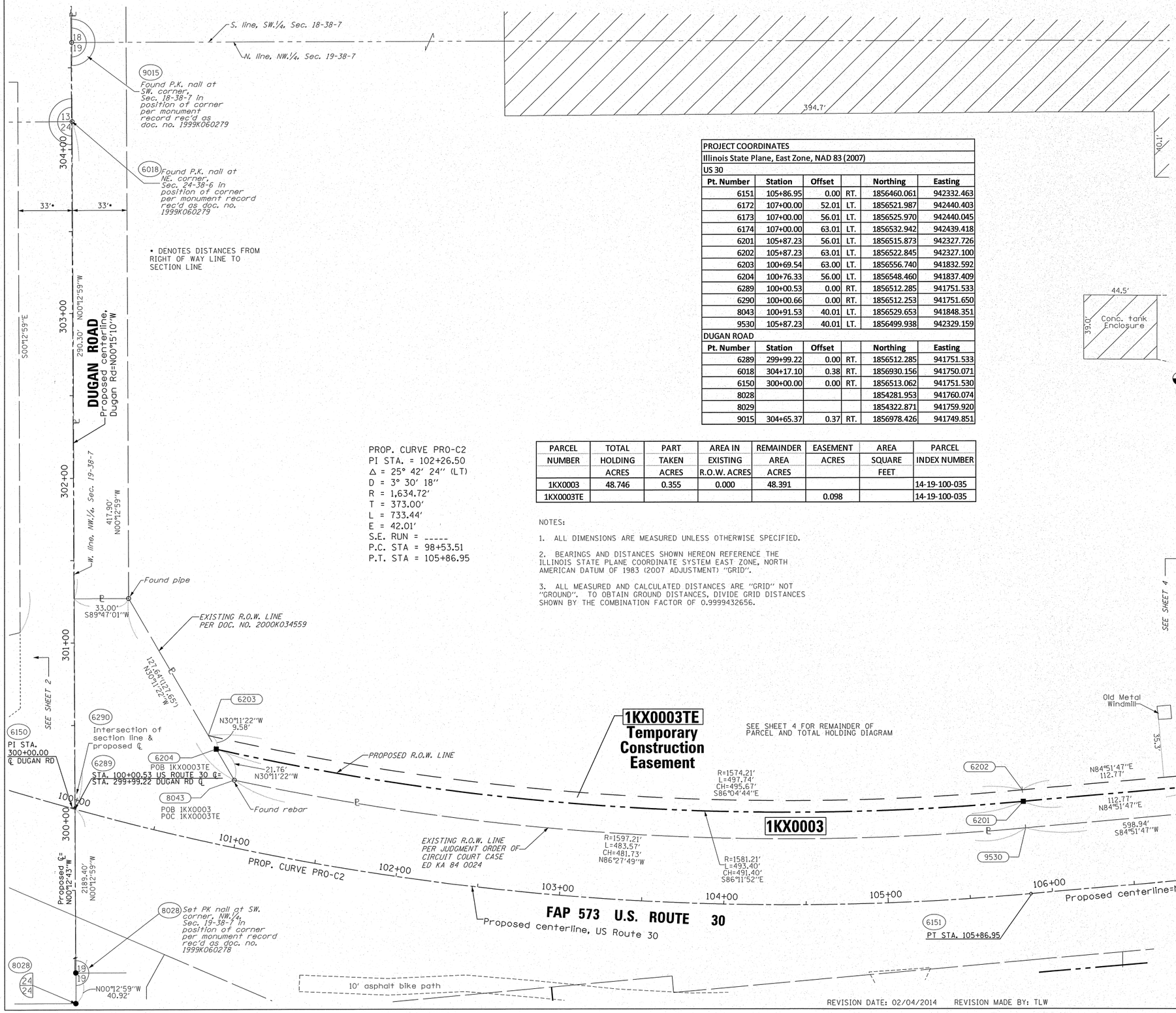

LEGEND

SECTION CORNER

QUARTER SECTION CORNER

SECTION / QUARTER SECTION LINE
PLATTED LOT LINES
PROPERTY (DEED) LINE
APL APPARENT PROPERTY LINE
EXISTING CENTERLINE
PROPOSED CENTERLINE
EXISTING RIGHT OF WAY LINE
PROPOSED RIGHT OF WAY LINE
EXISTING EASEMENT
PROPOSED EASEMENT
AC EXISTING ACCESS CONTROL LINE
AC PROPOSED ACCESS CONTROL LINE
129.32' MEASURED DIMENSION
129.32' (COMP) COMPUTED DIMENSION
(129.32') RECORDED DIMENSION
EXISTING BUILDING

N

GRAPHIC SCALE FEET
0 30
SCALE: 1"= 30'

○ IRON PIPE OR ROD FOUND
⊕ "MAG" NAIL SET
+ CUT CROSS FOUND OR SET
● 5 / 8" REBAR SET
■ STAKING OF PROPOSED RIGHT OF WAY. SET DIVISION OF HIGHWAYS SURVEY MARKER TO MONUMENT THE POSITION SHOWN. IDENTIFIED BY INSCRIPTION DATA AND SURVEYORS REGISTRATION NUMBER.
■ M STAKING OF PROPOSED RIGHT OF WAY IN CULTIVATED AREAS. BURIED 5/8 INCH METAL ROD 20 INCHES BELOW GROUND TO MARK FUTURE SURVEY MARKER POSITION IDENTIFIED BY COLORED PLASTIC CAP BEARING SURVEYORS REGISTRATION NUMBER.
PERMANENT SURVEY MARKER, I.D.O.T. STANDARD 2135 (TO BE SET BY OTHERS)
□ RIGHT OF WAY STAKING PROPOSED TO BE SET

PROJECT COORDINATES					
Illinois State Plane, East Zone, NAD 83 (2007)					
US 30					
Pt. Number	Station	Offset		Northing	Easting
6151	105+86.95	0.00	RT.	1856460.061	942332.463
6172	107+00.00	52.01	LT.	1856521.987	942440.403
6173	107+00.00	56.01	LT.	1856525.970	942440.045
6174	107+00.00	63.01	LT.	1856532.942	942439.418
6201	105+87.23	56.01	LT.	1856515.873	942327.726
6202	105+87.23	63.01	LT.	1856522.845	942327.100
6203	100+69.54	63.00	LT.	1856556.740	941832.592
6204	100+76.33	56.00	LT.	1856548.460	941837.409
6289	100+00.53	0.00	RT.	1856512.285	941751.533
6290	100+00.66	0.00	RT.	1856512.253	941751.650
8043	100+91.53	40.01	LT.	1856529.653	941848.351
9530	105+87.23	40.01	LT.	1856499.938	942329.159
DUGAN ROAD					
Pt. Number	Station	Offset		Northing	Easting
6289	299+99.22	0.00	RT.	1856512.285	941751.533
6018	304+17.10	0.38	RT.	1856930.156	941750.071
6150	300+00.00	0.00	RT.	1856513.062	941751.530
8028				1854281.953	941760.074
8029				1854322.871	941759.920
9015	304+65.37	0.37	RT.	1856978.426	941749.851

PROP. CURVE PRO-C2
PI STA. = 102+26.50
Δ = 25° 42' 24" (LT)
D = 3° 30' 18"
R = 1,634.72'
T = 373.00'
L = 733.44'
E = 42.01'
S.E. RUN = -----
P.C. STA = 98+53.51
P.T. STA = 105+86.95

PARCEL NUMBER	TOTAL HOLDING ACRES	PART TAKEN ACRES	AREA IN EXISTING R.O.W. ACRES	REMAINDER AREA ACRES	EASEMENT ACRES	AREA SQUARE FEET	PARCEL INDEX NUMBER
1KX0003	48.746	0.355	0.000	48.391			14-19-100-035
1KX0003TE					0.098		14-19-100-035

NOTES:

1. ALL DIMENSIONS ARE MEASURED UNLESS OTHERWISE SPECIFIED.

2. BEARINGS AND DISTANCES SHOWN HEREON REFERENCE THE ILLINOIS STATE PLANE COORDINATE SYSTEM EAST ZONE, NORTH AMERICAN DATUM OF 1983 (2007 ADJUSTMENT) "GRID".

3. ALL MEASURED AND CALCULATED DISTANCES ARE "GRID" NOT "GROUND". TO OBTAIN GROUND DISTANCES, DIVIDE GRID DISTANCES SHOWN BY THE COMBINATION FACTOR OF 0.9999432656.

STATE OF ILLINOIS)
)SS
COUNTY OF WILL)

THIS IS TO CERTIFY THAT I, KENNETH J. PESAVENTO, AN ILLINOIS PROFESSIONAL LAND SURVEYOR, (WE, RUETTIGER, TONELLI & ASSOCIATES AN ILLINOIS PROFESSIONAL DESIGN FIRM LAND SURVEYING CORPORATION, NUMBER 184-001251,) HAVE SURVEYED THE PLAT OF HIGHWAYS SHOWN HEREON IN SECTIONS 18 & 19, TOWNSHIP 38 NORTH, RANGE 7 EAST OF THE THIRD PRINCIPAL MERIDIAN, KANE COUNTY, THAT THE SURVEY IS TRUE AND COMPLETE AS SHOWN TO THE BEST OF MY KNOWLEDGE AND BELIEF, THAT THE PLAT CORRECTLY REPRESENTS SAID SURVEY, THAT ALL MONUMENTS FOUND AND ESTABLISHED ARE OF PERMANENT QUALITY AND OCCUPY THE POSITIONS SHOWN THEREON AND THAT THE MONUMENTS ARE SUFFICIENT TO ENABLE THE SURVEY TO BE RETRACED, MADE FOR THE DEPARTMENT OF TRANSPORTATION, STATE OF ILLINOIS.

DATED AT _____, ILLINOIS THIS __ DAY OF _____ 20__ A.D.

ILLINOIS PROFESSIONAL LAND SURVEYOR NO. 3425
LICENSE EXPIRATION DATE: 11-30-2014

THIS PROFESSIONAL SERVICE CONFORMS TO THE CURRENT ILLINOIS MINIMUM STANDARDS FOR A BOUNDARY SURVEY.

Ruettiger, Tonelli & Associates, Inc.
Surveyors• Engineers• Planners• Landscape Architects• G.I.S. Consultants
129 CAPISTA DRIVE - SHOREWOOD, ILLINOIS 60404
PH. (815) 744-6600 FAX (815) 744-0101
website: www.ruettigertonelli.com

R.T. & A. Dwg. No.: 2013-1130

PLAT OF HIGHWAYS

STATE OF ILLINOIS
DEPARTMENT OF TRANSPORTATION
FAP 573 U.S. ROUTE 30

LIMITS: AT DUGAN RD. COUNTY: KANE
SECTION: JOB NO.: R-91-004-14
STA. 100+00 TO STA. 107+00
SCALE: 1"=30' SHEET 3 OF 8 SHEETS

IDOT USE ONLY
SS
RECEIVED
FEB 04 2014
PLATS & LEGALS

BUREAU OF LAND ACQUISITION
201 WEST CENTER COURT
SCHAUMBURG, ILLINOIS 60196

REVISION DATE: 02/04/2014 REVISION MADE BY: TLW

PART OF THE SW.1/4 OF SECTION 18 AND THE NW.1/4 OF SECTION 19, TWP. 38 N., R. 7 E. OF THE 3RD. P.M., IN KANE COUNTY, ILLINOIS.

NOTES:

1. ALL DIMENSIONS ARE MEASURED UNLESS OTHERWISE SPECIFIED.

2. BEARINGS AND DISTANCES SHOWN HEREON REFERENCE THE ILLINOIS STATE PLANE COORDINATE SYSTEM EAST ZONE, NORTH AMERICAN DATUM OF 1983 (2007 ADJUSTMENT) "GRID".

3. ALL MEASURED AND CALCULATED DISTANCES ARE "GRID" NOT "GROUND". TO OBTAIN GROUND DISTANCES, DIVIDE GRID DISTANCES SHOWN BY THE COMBINATION FACTOR OF 0.9999432656.

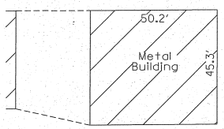

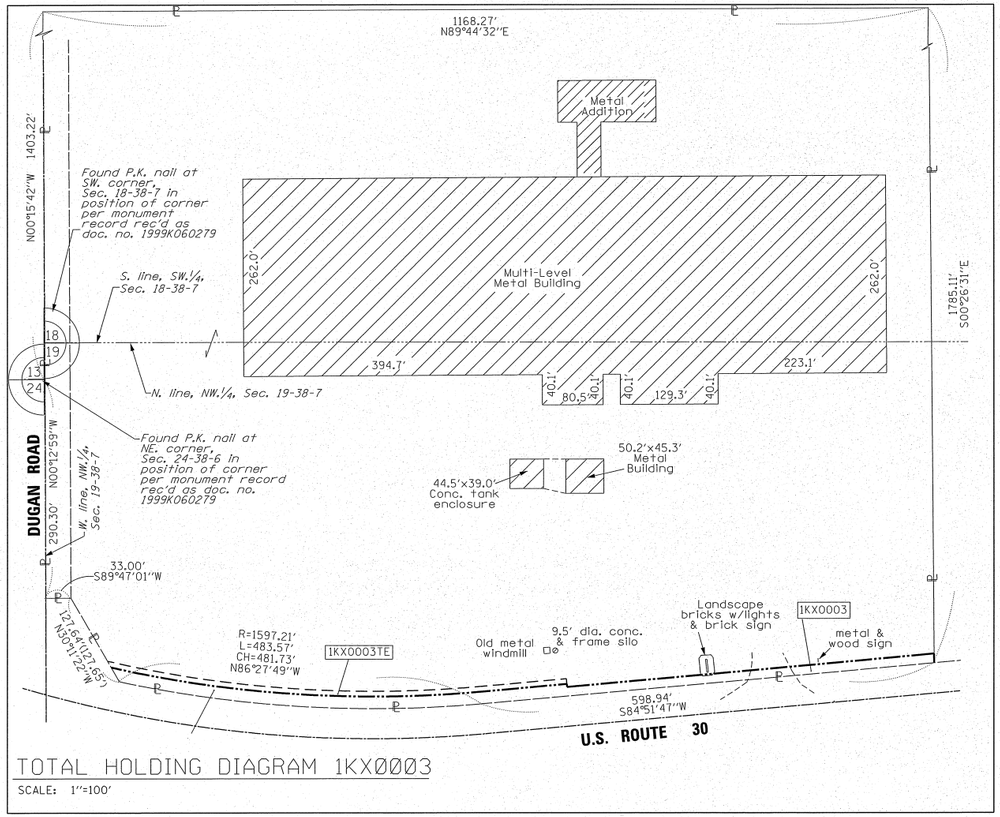

TOTAL HOLDING DIAGRAM 1KX0003

SCALE: 1"=100'

LEGEND

SECTION CORNER

16 15 QUARTER SECTION CORNER

N

GRAPHIC SCALE FEET

0 30

SCALE: 1"= 30'

- SECTION / QUARTER SECTION LINE
- PLATTED LOT LINES
- PROPERTY (DEED) LINE
- APL — APPARENT PROPERTY LINE
- EXISTING CENTERLINE
- PROPOSED CENTERLINE
- EXISTING RIGHT OF WAY LINE
- PROPOSED RIGHT OF WAY LINE
- EXISTING EASEMENT
- PROPOSED EASEMENT
- AC — EXISTING ACCESS CONTROL LINE
- AC — PROPOSED ACCESS CONTROL LINE
- 129.32' — MEASURED DIMENSION
- 129.32' (COMP) — COMPUTED DIMENSION
- (129.32') — RECORDED DIMENSION
- EXISTING BUILDING

- ○ IRON PIPE OR ROD FOUND
- + CUT CROSS FOUND OR SET
- ⊕ "MAG" NAIL SET
- ● 5 / 8" REBAR SET
- ■ STAKING OF PROPOSED RIGHT OF WAY. SET DIVISION OF HIGHWAYS SURVEY MARKER TO MONUMENT THE POSITION SHOWN. IDENTIFIED BY INSCRIPTION DATA AND SURVEYORS REGISTRATION NUMBER.
- ■ M STAKING OF PROPOSED RIGHT OF WAY IN CULTIVATED AREAS. BURIED 5/8 INCH METAL ROD 20 INCHES BELOW GROUND TO MARK FUTURE SURVEY MARKER POSITION IDENTIFIED BY COLORED PLASTIC CAP BEARING SURVEYORS REGISTRATION NUMBER.
- ◐ PERMANENT SURVEY MARKER, I.D.O.T. STANDARD 2135 (TO BE SET BY OTHERS)
- □ RIGHT OF WAY STAKING PROPOSED TO BE SET

PROJECT COORDINATES					
Illinois State Plane, East Zone, NAD 83 (2007)					
Pt. Number	Station	Offset		Northing	Easting
US 30					
6172	107+00.00	52.01	LT.	1856521.987	942440.403
6173	107+00.00	56.01	LT.	1856525.970	942440.045
6285	111+86.17	39.98	LT.	1856553.564	942925.695
6286	111+87.16	51.98	LT.	1856565.605	942925.602

PARCEL NUMBER	TOTAL HOLDING ACRES	PART TAKEN ACRES	AREA IN EXISTING R.O.W. ACRES	REMAINDER AREA ACRES	EASEMENT ACRES	AREA SQUARE FEET	PARCEL INDEX NUMBER
1KX0003	48.746	0.355	0.000	48.391			14-19-100-035
1KX0003TE					0.098		14-19-100-035

SEE SHEET 3

SEE SHEET 3 FOR REMAINDER OF PARCEL SEE TO RIGHT FOR TOTAL HOLDING DIAGRAM.

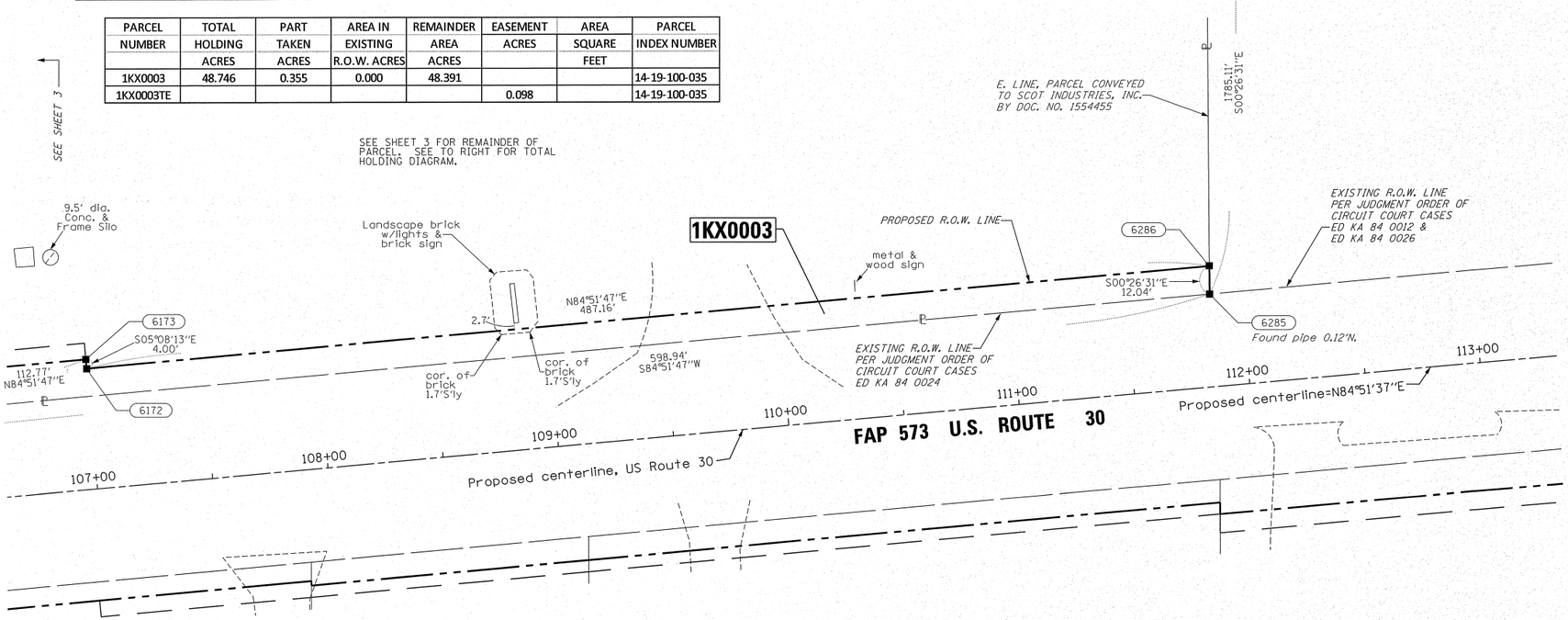

STATE OF ILLINOIS)
)SS
COUNTY OF WILL)

THIS IS TO CERTIFY THAT I, KENNETH J. PESAVENTO, AN ILLINOIS PROFESSIONAL LAND SURVEYOR, (WE, RUETTIGER, TONELLI & ASSOCIATES AN ILLINOIS PROFESSIONAL DESIGN FIRM LAND SURVEYING CORPORATION, NUMBER 184-001251,) HAVE SURVEYED THE PLAT OF HIGHWAYS SHOWN HEREON IN SECTIONS 18 & 19, TOWNSHIP 38 NORTH, RANGE 7 EAST OF THE THIRD PRINCIPAL MERIDIAN, KANE COUNTY, THAT THE SURVEY IS TRUE AND COMPLETE AS SHOWN TO THE BEST OF MY KNOWLEDGE AND BELIEF, THAT THE PLAT CORRECTLY REPRESENTS SAID SURVEY, THAT ALL MONUMENTS FOUND AND ESTABLISHED ARE OF PERMANENT QUALITY AND OCCUPY THE POSITIONS SHOWN THEREON AND THAT THE MONUMENTS ARE SUFFICIENT TO ENABLE THE SURVEY TO BE RETRACED, MADE FOR THE DEPARTMENT OF TRANSPORTATION, STATE OF ILLINOIS.

DATED AT_____, ILLINOIS THIS __ DAY OF_____ 20 __ A.D.

_____

ILLINOIS PROFESSIONAL LAND SURVEYOR NO. 3425
LICENSE EXPIRATION DATE: 11-30-2014

THIS PROFESSIONAL SERVICE CONFORMS TO THE CURRENT ILLINOIS MINIMUM STANDARDS FOR A BOUNDARY SURVEY.

R T & A
Ruettiger, Tonelli & Associates, Inc.
Surveyors • Engineers • Planners • Landscape Architects • G.I.S. Consultants
129 CAPISTA DRIVE - SHOREWOOD, ILLINOIS 60404
PH. (815) 744-6600 FAX (815) 744-0101
website: www.ruettigertonelli.com

R.T. & A. Dwg. No.: 2013-1130

PLAT OF HIGHWAYS

STATE OF ILLINOIS
DEPARTMENT OF TRANSPORTATION
FAP 573 U.S. ROUTE 30

LIMITS: AT DUGAN RD. COUNTY: KANE
SECTION: JOB NO.: R-91-004-14
STA. 107+00 TO STA. 113+00
SCALE: 1"=30' SHEET 4 OF 8 SHEETS

IDOT USE ONLY
SS
RECEIVED
FEB 04 2014
PLATS & LEGALS

BUREAU OF LAND ACQUISITION
201 WEST CENTER COURT
SCHAUMBURG, ILLINOIS 60196

REVISION DATE: 02/04/2014 REVISION MADE BY: TLW

PART OF THE NW.1/4 OF SECTION 19, TWP. 38 N., R. 7 E. OF THE 3RD. P.M., IN KANE COUNTY, ILLINOIS.

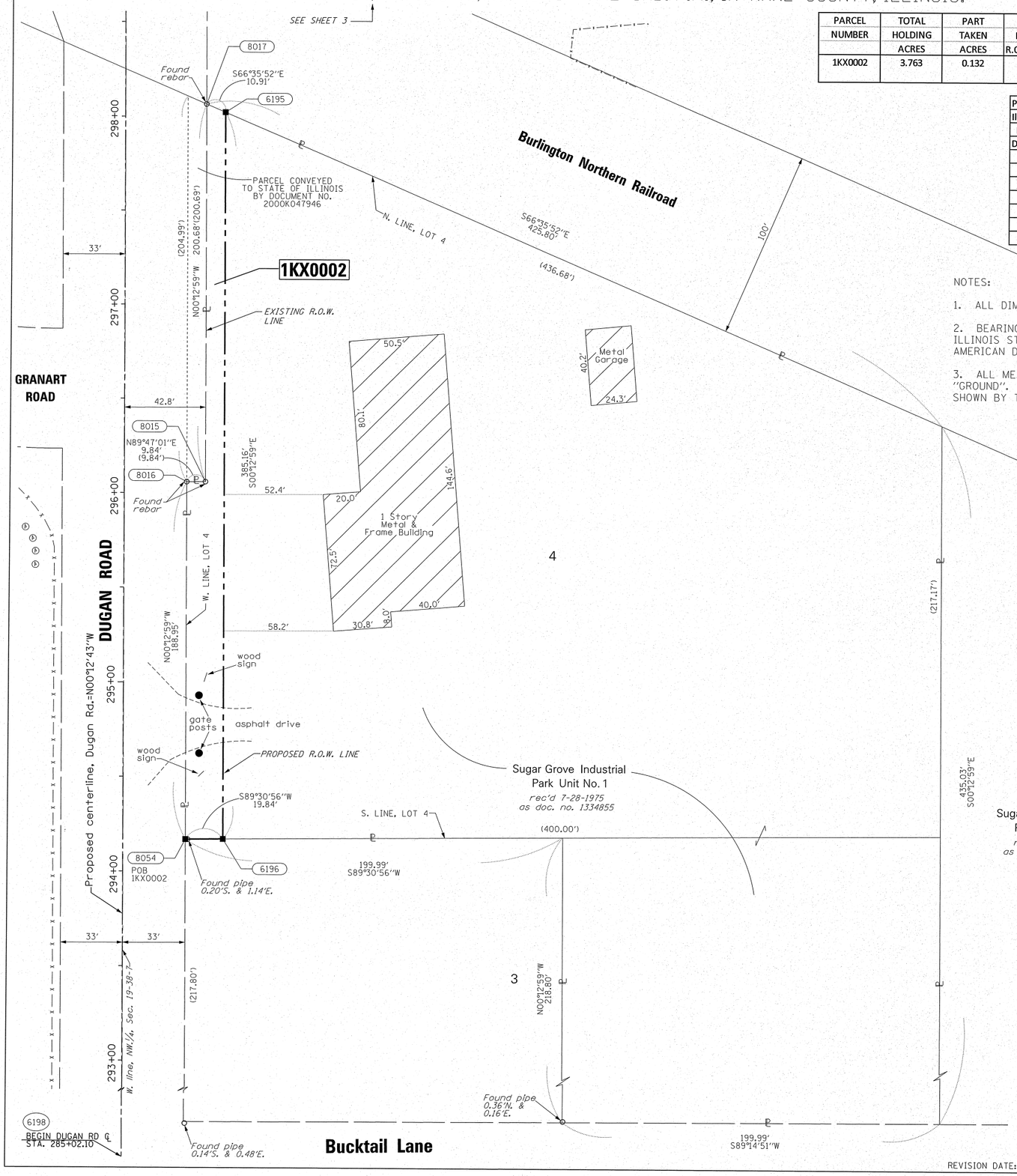

PARCEL NUMBER	TOTAL HOLDING ACRES	PART TAKEN ACRES	AREA IN EXISTING R.O.W. ACRES	REMAINDER AREA ACRES	EASEMENT ACRES	AREA SQUARE FEET	PARCEL INDEX NUMBER
1KX0002	3.763	0.132	0.000	3.631			14-19-101-005
							14-19-101-004

PROJECT COORDINATES					
Illinois State Plane, East Zone, NAD 83 (2007)					
Pt. Number	Station	Offset		Northing	Easting
DUGAN ROAD					
6195	298+02.11	52.97	RT.	1856315.374	941805.233
6196	294+16.96	53.00	RT.	1855930.219	941806.687
6198	285+02.10	0.00	RT.	1855015.167	941757.073
8015	296+05.81	42.99	RT.	1856119.034	941795.974
8016	296+05.81	33.14	RT.	1856118.997	941786.133
8017	298+06.49	42.97	RT.	1856319.709	941795.216
8054	294+16.86	33.16	RT.	1855930.051	941786.847

NOTES:

1. ALL DIMENSIONS ARE MEASURED UNLESS OTHERWISE SPECIFIED.

2. BEARINGS AND DISTANCES SHOWN HEREON REFERENCE THE ILLINOIS STATE PLANE COORDINATE SYSTEM EAST ZONE, NORTH AMERICAN DATUM OF 1983 (2007 ADJUSTMENT) "GRID".

3. ALL MEASURED AND CALCULATED DISTANCES ARE "GRID" NOT "GROUND". TO OBTAIN GROUND DISTANCES, DIVIDE GRID DISTANCES SHOWN BY THE COMBINATION FACTOR OF 0.9999432656.

LEGEND

SECTION CORNER

QUARTER SECTION CORNER

GRAPHIC SCALE FEET

SCALE: 1"= 30'

SECTION / QUARTER SECTION LINE
PLATTED LOT LINES
PROPERTY (DEED) LINE
APPARENT PROPERTY LINE
EXISTING CENTERLINE
PROPOSED CENTERLINE
EXISTING RIGHT OF WAY LINE
PROPOSED RIGHT OF WAY LINE
EXISTING EASEMENT
PROPOSED EASEMENT
EXISTING ACCESS CONTROL LINE
PROPOSED ACCESS CONTROL LINE
MEASURED DIMENSION
COMPUTED DIMENSION
RECORDED DIMENSION
EXISTING BUILDING

IRON PIPE OR ROD FOUND
CUT CROSS FOUND OR SET
"MAG" NAIL SET
5 / 8" REBAR SET

STAKING OF PROPOSED RIGHT OF WAY. SET DIVISION OF HIGHWAYS SURVEY MARKER TO MONUMENT THE POSITION SHOWN. IDENTIFIED BY INSCRIPTION DATA AND SURVEYORS REGISTRATION NUMBER.

STAKING OF PROPOSED RIGHT OF WAY IN CULTIVATED AREAS. BURIED 5/8 INCH METAL ROD 20 INCHES BELOW GROUND TO MARK FUTURE SURVEY MARKER POSITION IDENTIFIED BY COLORED PLASTIC CAP BEARING SURVEYORS REGISTRATION NUMBER.

PERMANENT SURVEY MARKER, I.D.O.T. STANDARD 2135 (TO BE SET BY OTHERS)

RIGHT OF WAY STAKING PROPOSED TO BE SET

STATE OF ILLINOIS)
)SS
COUNTY OF WILL)

THIS IS TO CERTIFY THAT I, KENNETH J. PESAVENTO, AN ILLINOIS PROFESSIONAL LAND SURVEYOR, (WE, RUETTIGER, TONELLI & ASSOCIATES AN ILLINOIS PROFESSIONAL DESIGN FIRM LAND SURVEYING CORPORATION, NUMBER 184-001251,) HAVE SURVEYED THE PLAT OF HIGHWAYS SHOWN HEREON IN SECTION 19, TOWNSHIP 38 NORTH, RANGE 7 EAST OF THE THIRD PRINCIPAL MERIDIAN, KANE COUNTY, THAT THE SURVEY IS TRUE AND COMPLETE AS SHOWN TO THE BEST OF MY KNOWLEDGE AND BELIEF, THAT THE PLAT CORRECTLY REPRESENTS SAID SURVEY, THAT ALL MONUMENTS FOUND AND ESTABLISHED ARE OF PERMANENT QUALITY AND OCCUPY THE POSITIONS SHOWN THEREON AND THAT THE MONUMENTS ARE SUFFICIENT TO ENABLE THE SURVEY TO BE RETRACED, MADE FOR THE DEPARTMENT OF TRANSPORTATION, STATE OF ILLINOIS.

DATED AT _____, ILLINOIS THIS __ DAY OF _____ 20 __ A.D.

ILLINOIS PROFESSIONAL LAND SURVEYOR NO. 3425
LICENSE EXPIRATION DATE: 11-30-2014

THIS PROFESSIONAL SERVICE CONFORMS TO THE CURRENT ILLINOIS MINIMUM STANDARDS FOR A BOUNDARY SURVEY.

Ruettiger, Tonelli & Associates, Inc.
Surveyors • Engineers • Planners • Landscape Architects • G.I.S. Consultants
129 CAPISTA DRIVE - SHOREWOOD, ILLINOIS 60404
PH. (815) 744-6600 FAX (815) 744-0101
website: www.ruettigertonelli.com

R.T. & A. Dwg. No.: 2013-1130

PLAT OF HIGHWAYS

STATE OF ILLINOIS
DEPARTMENT OF TRANSPORTATION
FAP 573 U.S. ROUTE 30

LIMITS: AT DUGAN RD. COUNTY: KANE
SECTION: JOB NO.: R-91-004-14
STA. 293+00 TO STA. 298+50
SCALE: 1"=30' SHEET 5 OF 8 SHEETS

IDOT USE ONLY
SS
RECEIVED
FEB 0 4 2014
PLATS & LEGALS

BUREAU OF LAND ACQUISITION
201 WEST CENTER COURT
SCHAUMBURG, ILLINOIS 60196

REVISION DATE: 02/04/2014 REVISED BY: TLW

PART OF THE THE NW.1/4 OF SECTION 19, TWP. 38 N., R. 7 E. OF THE 3RD. P.M., IN KANE COUNTY, ILLINOIS.

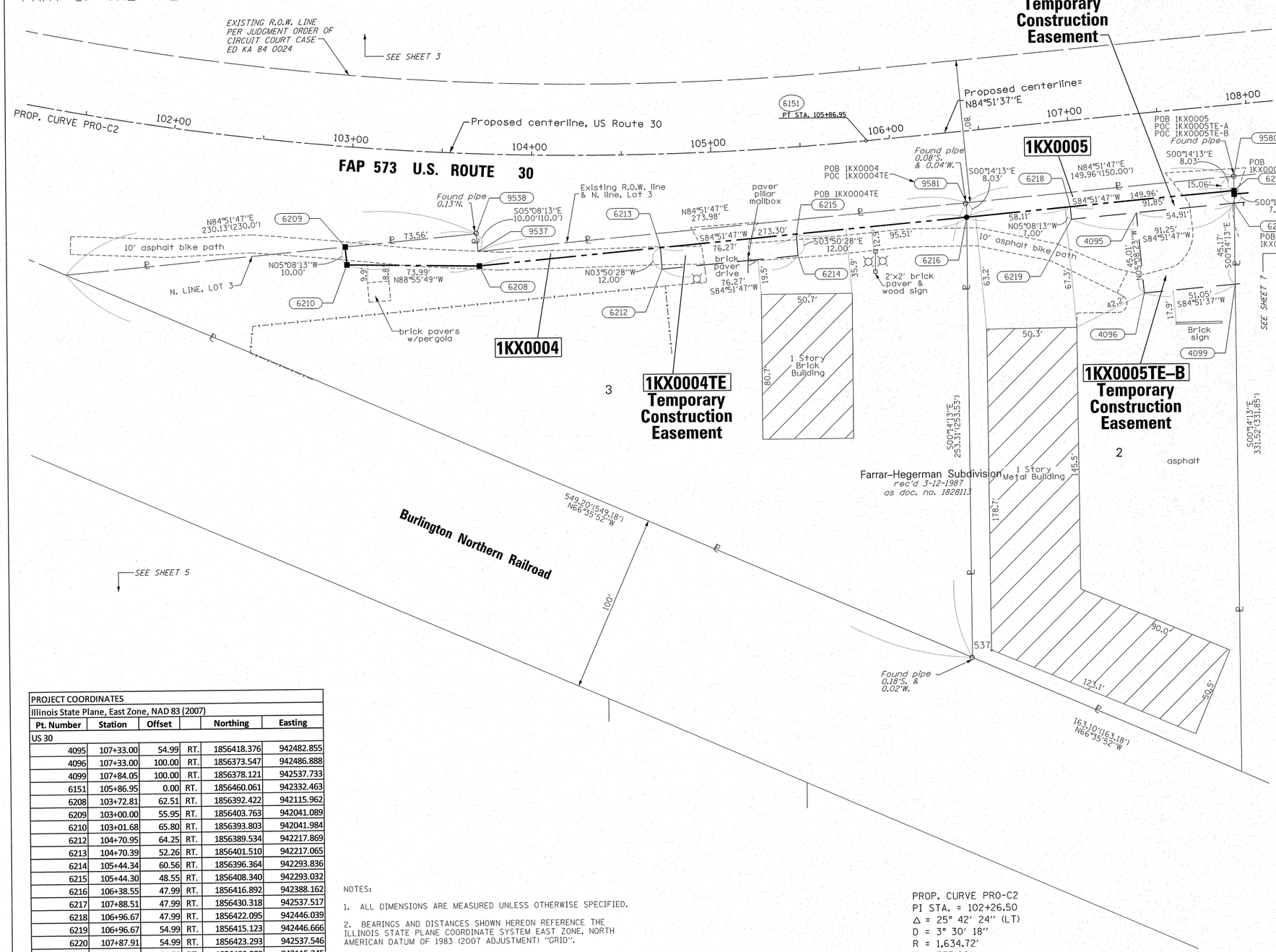

LEGEND

SECTION CORNER

QUARTER SECTION CORNER

GRAPHIC SCALE FEET

SCALE: 1"= 30'

SECTION / QUARTER SECTION LINE
PLATTED LOT LINES
PROPERTY (DEED) LINE
APPARENT PROPERTY LINE
EXISTING CENTERLINE
PROPOSED CENTERLINE
EXISTING RIGHT OF WAY LINE
PROPOSED RIGHT OF WAY LINE
EXISTING EASEMENT
PROPOSED EASEMENT
EXISTING ACCESS CONTROL LINE
PROPOSED ACCESS CONTROL LINE
MEASURED DIMENSION
COMPUTED DIMENSION
RECORDED DIMENSION
EXISTING BUILDING

129.32'
129.32' (COMP)
(129.32')

IRON PIPE OR ROD FOUND
CUT CROSS FOUND OR SET
"MAG" NAIL SET
5 / 8" REBAR SET

STAKING OF PROPOSED RIGHT OF WAY. SET DIVISION OF HIGHWAYS SURVEY MARKER TO MONUMENT THE POSITION SHOWN. IDENTIFIED BY INSCRIPTION DATA AND SURVEYORS REGISTRATION NUMBER.

STAKING OF PROPOSED RIGHT OF WAY IN CULTIVATED AREAS. BURIED 5/8 INCH METAL ROD 20 INCHES BELOW GROUND TO MARK FUTURE SURVEY MARKER POSITION IDENTIFIED BY COLORED PLASTIC CAP BEARING SURVEYORS REGISTRATION NUMBER.

PERMANENT SURVEY MARKER. I.D.O.T. STANDARD 2135 (TO BE SET BY OTHERS)

RIGHT OF WAY STAKING PROPOSED TO BE SET

PROJECT COORDINATES					
Illinois State Plane, East Zone, NAD 83 (2007)					
Pt. Number	Station	Offset		Northing	Easting
US 30					
4095	107+33.00	54.99	RT.	1856418.376	942482.855
4096	107+33.00	100.00	RT.	1856373.547	942486.888
4099	107+84.05	100.00	RT.	1856378.121	942537.733
6151	105+86.95	0.00	RT.	1856460.061	942332.463
6208	103+72.81	62.51	RT.	1856392.422	942115.962
6209	103+00.00	55.95	RT.	1856403.763	942041.089
6210	103+01.68	65.80	RT.	1856393.803	942041.984
6212	104+70.95	64.25	RT.	1856389.534	942217.869
6213	104+70.39	52.26	RT.	1856401.510	942217.065
6214	105+44.34	60.56	RT.	1856396.364	942293.836
6215	105+44.30	48.55	RT.	1856408.340	942293.032
6216	106+38.55	47.99	RT.	1856416.892	942388.162
6217	107+88.51	47.99	RT.	1856430.318	942537.517
6218	106+96.67	47.99	RT.	1856422.095	942446.039
6219	106+96.67	54.99	RT.	1856415.123	942446.666
6220	107+87.91	54.99	RT.	1856423.293	942537.546
9537	103+71.80	54.58	RT.	1856400.389	942115.245
9538	103+70.52	44.67	RT.	1856410.349	942114.350
9580	107+89.20	39.99	RT.	1856438.347	942537.484
9581	106+39.24	39.99	RT.	1856424.921	942388.128

NOTES:

1. ALL DIMENSIONS ARE MEASURED UNLESS OTHERWISE SPECIFIED.

2. BEARINGS AND DISTANCES SHOWN HEREON REFERENCE THE ILLINOIS STATE PLANE COORDINATE SYSTEM EAST ZONE, NORTH AMERICAN DATUM OF 1983 (2007 ADJUSTMENT) "GRID".

3. ALL MEASURED AND CALCULATED DISTANCES ARE "GRID" NOT "GROUND". TO OBTAIN GROUND DISTANCES, DIVIDE GRID DISTANCES SHOWN BY THE COMBINATION FACTOR OF 0.9999432656.

PROP. CURVE PRO-C2
PI STA. = 102+26.50
Δ = 25° 42' 24" (LT)
D = 3° 30' 18"
R = 1,634.72'
T = 373.00'
L = 733.44'
E = 42.01'
S.E. RUN = -----
P.C. STA = 98+53.51
P.T. STA = 105+86.95

PARCEL NUMBER	TOTAL HOLDING ACRES	PART TAKEN ACRES	AREA IN EXISTING R.O.W. ACRES	REMAINDER AREA ACRES	EASEMENT ACRES	AREA SQUARE FEET	PARCEL INDEX NUMBER
1KX0004	1.458	0.074	0.000	1.384			14-19-105-003
1KX0004TE					0.021		14-19-105-003
1KX0005	1.003	0.028	0.000	0.975			14-19-105-002
1KX0005TE-A					0.015		14-19-105-002
1KX0005TE-B					0.055		

REVISION DATE: 05/23/2014 REVISION MADE BY: TLW
REVISION DATE: 02/04/2014 REVISION MADE BY: TLW

STATE OF ILLINOIS)
)SS
COUNTY OF WILL)

THIS IS TO CERTIFY THAT I, KENNETH J. PESAVENTO, AN ILLINOIS PROFESSIONAL LAND SURVEYOR, (WE, RUETTIGER, TONELLI & ASSOCIATES AN ILLINOIS PROFESSIONAL DESIGN FIRM LAND SURVEYING CORPORATION, NUMBER 184-001251,) HAVE SURVEYED THE PLAT OF HIGHWAYS SHOWN HEREON IN SECTIONS 18 & 19, TOWNSHIP 38 NORTH, RANGE 7 EAST OF THE THIRD PRINCIPAL MERIDIAN, KANE COUNTY, THAT THE SURVEY IS TRUE AND COMPLETE AS SHOWN TO THE BEST OF MY KNOWLEDGE AND BELIEF, THAT THE PLAT CORRECTLY REPRESENTS SAID SURVEY, THAT ALL MONUMENTS FOUND AND ESTABLISHED ARE OF PERMANENT QUALITY AND OCCUPY THE POSITIONS SHOWN THEREON AND THAT THE MONUMENTS ARE SUFFICIENT TO ENABLE THE SURVEY TO BE RETRACED, MADE FOR THE DEPARTMENT OF TRANSPORTATION, STATE OF ILLINOIS.

DATED AT _____, ILLINOIS THIS __ DAY OF _____ 20 __ A.D.

ILLINOIS PROFESSIONAL LAND SURVEYOR NO. 3425
LICENSE EXPIRATION DATE: 11-30-2014

THIS PROFESSIONAL SERVICE CONFORMS TO THE CURRENT ILLINOIS MINIMUM STANDARDS FOR A BOUNDARY SURVEY.

Ruettiger, Tonelli & Associates, Inc.
Surveyors • Engineers • Planners • Landscape Architects • G.I.S. Consultants
129 CAPISTA DRIVE • SHOREWOOD, ILLINOIS 60404
PH. (815) 744-6600 FAX (815) 744-0101
website: www.ruettigertonelli.com

R.T. & A. Dwg. No.: 2013-1130

PLAT OF HIGHWAYS

STATE OF ILLINOIS
DEPARTMENT OF TRANSPORTATION
FAP 573 U.S. ROUTE 30

LIMITS: AT DUGAN RD. COUNTY: KANE
SECTION: JOB NO.: R-91-004-14
STA. 100+00 TO STA. 107+00
SCALE: 1"=30' SHEET 6 OF 8 SHEETS

IDOT USE ONLY
SS
RECEIVED
MAY 28 2014
PLATS & LEGALS

BUREAU OF LAND ACQUISITION
201 WEST CENTER COURT
SCHAUMBURG, ILLINOIS 60196

PART OF THE THE NW.1/4 OF SECTION 19, TWP. 38 N., R. 7 E. OF THE 3RD. P.M., IN KANE COUNTY, ILLINOIS.

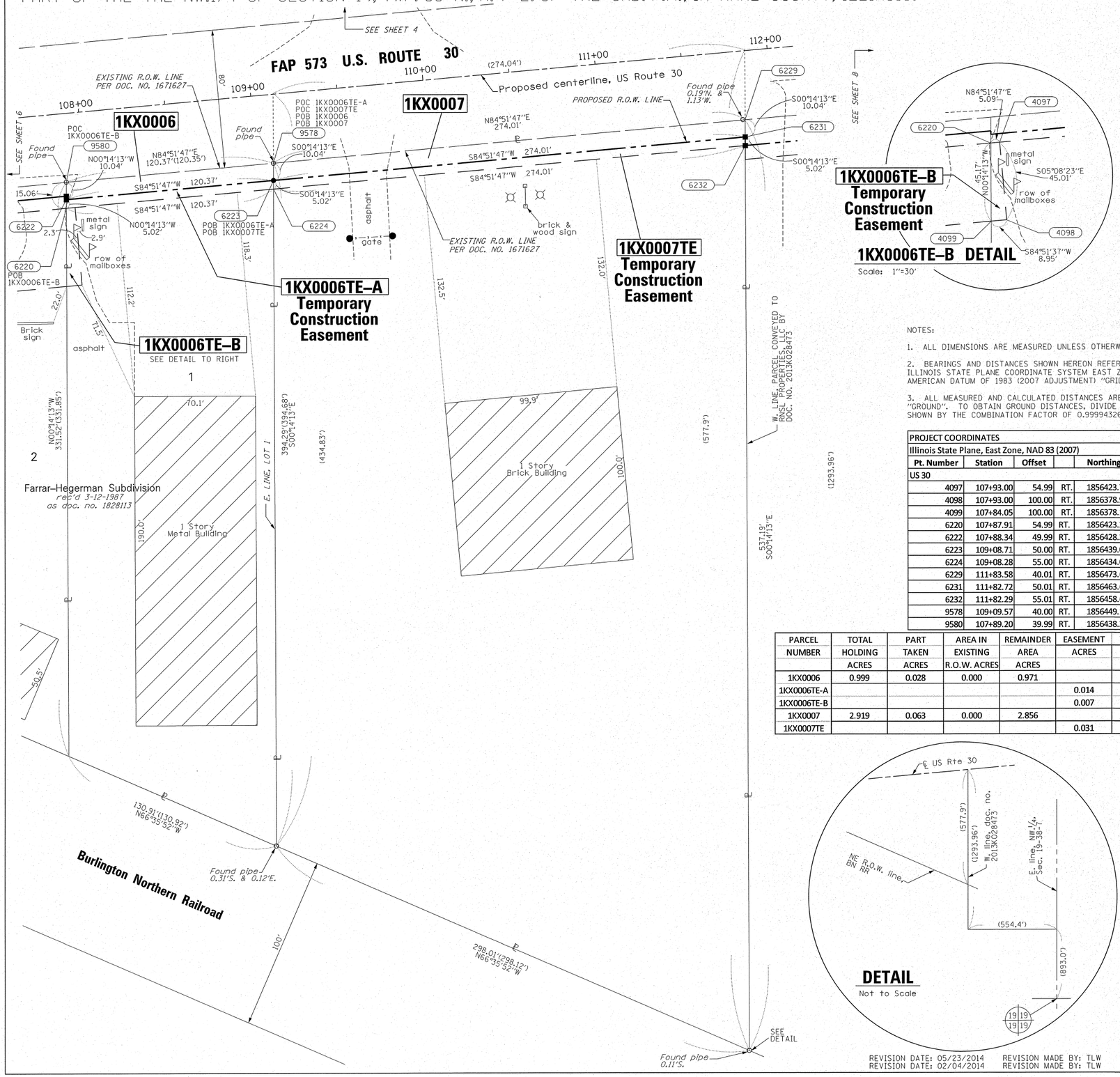

1KX0006TE–B DETAIL

Scale: 1"=30'

LEGEND

SECTION CORNER

QUARTER SECTION CORNER

GRAPHIC SCALE FEET — SCALE: 1"= 30'

SECTION / QUARTER SECTION LINE
PLATTED LOT LINES
PROPERTY (DEED) LINE
APPARENT PROPERTY LINE
EXISTING CENTERLINE
PROPOSED CENTERLINE
EXISTING RIGHT OF WAY LINE
PROPOSED RIGHT OF WAY LINE
EXISTING EASEMENT
PROPOSED EASEMENT
EXISTING ACCESS CONTROL LINE
PROPOSED ACCESS CONTROL LINE
129.32' MEASURED DIMENSION
129.32' (COMP) COMPUTED DIMENSION
(129.32') RECORDED DIMENSION
EXISTING BUILDING

IRON PIPE OR ROD FOUND
CUT CROSS FOUND OR SET
"MAG" NAIL SET
5 / 8" REBAR SET

STAKING OF PROPOSED RIGHT OF WAY. SET DIVISION OF HIGHWAYS SURVEY MARKER TO MONUMENT THE POSITION SHOWN. IDENTIFIED BY INSCRIPTION DATA AND SURVEYORS REGISTRATION NUMBER.

STAKING OF PROPOSED RIGHT OF WAY IN CULTIVATED AREAS. BURIED 5/8 INCH METAL ROD 20 INCHES BELOW GROUND TO MARK FUTURE SURVEY MARKER POSITION IDENTIFIED BY COLORED PLASTIC CAP BEARING SURVEYORS REGISTRATION NUMBER.

PERMANENT SURVEY MARKER, I.D.O.T. STANDARD 2135 (TO BE SET BY OTHERS)

RIGHT OF WAY STAKING PROPOSED TO BE SET

NOTES:

1. ALL DIMENSIONS ARE MEASURED UNLESS OTHERWISE SPECIFIED.

2. BEARINGS AND DISTANCES SHOWN HEREON REFERENCE THE ILLINOIS STATE PLANE COORDINATE SYSTEM EAST ZONE, NORTH AMERICAN DATUM OF 1983 (2007 ADJUSTMENT) "GRID".

3. ALL MEASURED AND CALCULATED DISTANCES ARE "GRID" NOT "GROUND". TO OBTAIN GROUND DISTANCES, DIVIDE GRID DISTANCES SHOWN BY THE COMBINATION FACTOR OF 0.9999432656.

PROJECT COORDINATES					
Illinois State Plane, East Zone, NAD 83 (2007)					
Pt. Number	Station	Offset		Northing	Easting
US 30					
4097	107+93.00	54.99	RT.	1856423.748	942542.614
4098	107+93.00	100.00	RT.	1856378.922	942546.646
4099	107+84.05	100.00	RT.	1856378.121	942537.733
6220	107+87.91	54.99	RT.	1856423.293	942537.546
6222	107+88.34	49.99	RT.	1856428.311	942537.526
6223	109+08.71	50.00	RT.	1856439.088	942657.412
6224	109+08.28	55.00	RT.	1856434.070	942657.432
6229	111+83.58	40.01	RT.	1856473.658	942930.277
6231	111+82.72	50.01	RT.	1856463.622	942930.319
6232	111+82.29	55.01	RT.	1856458.603	942930.340
9578	109+09.57	40.00	RT.	1856449.125	942657.370
9580	107+89.20	39.99	RT.	1856438.347	942537.484

PARCEL NUMBER	TOTAL HOLDING ACRES	PART TAKEN ACRES	AREA IN EXISTING R.O.W. ACRES	REMAINDER AREA ACRES	EASEMENT ACRES	AREA SQUARE FEET	PARCEL INDEX NUMBER
1KX0006	0.999	0.028	0.000	0.971			14-19-105-001
1KX0006TE-A					0.014		14-19-105-001
1KX0006TE-B					0.007	316	
1KX0007	2.919	0.063	0.000	2.856			14-19-100-028
1KX0007TE					0.031		14-19-100-028

DETAIL

Not to Scale

REVISION DATE: 05/23/2014 REVISION MADE BY: TLW
REVISION DATE: 02/04/2014 REVISION MADE BY: TLW

STATE OF ILLINOIS)
)SS
COUNTY OF WILL)

THIS IS TO CERTIFY THAT I, KENNETH J. PESAVENTO, AN ILLINOIS PROFESSIONAL LAND SURVEYOR, (WE, RUETTIGER, TONELLI & ASSOCIATES AN ILLINOIS PROFESSIONAL DESIGN FIRM LAND SURVEYING CORPORATION, NUMBER 184-001251,) HAVE SURVEYED THE PLAT OF HIGHWAYS SHOWN HEREON IN SECTIONS 18 & 19, TOWNSHIP 38 NORTH, RANGE 7 EAST OF THE THIRD PRINCIPAL MERIDIAN, KANE COUNTY, THAT THE SURVEY IS TRUE AND COMPLETE AS SHOWN TO THE BEST OF MY KNOWLEDGE AND BELIEF, THAT THE PLAT CORRECTLY REPRESENTS SAID SURVEY, THAT ALL MONUMENTS FOUND AND ESTABLISHED ARE OF PERMANENT QUALITY AND OCCUPY THE POSITIONS SHOWN THEREON AND THAT THE MONUMENTS ARE SUFFICIENT TO ENABLE THE SURVEY TO BE RETRACED, MADE FOR THE DEPARTMENT OF TRANSPORTATION, STATE OF ILLINOIS.

DATED AT_____, ILLINOIS THIS __ DAY OF_____20 __ A.D.

ILLINOIS PROFESSIONAL LAND SURVEYOR NO. 3425
LICENSE EXPIRATION DATE: 11-30-2014

THIS PROFESSIONAL SERVICE CONFORMS TO THE CURRENT ILLINOIS MINIMUM STANDARDS FOR A BOUNDARY SURVEY.

Ruettiger, Tonelli & Associates, Inc.
Surveyors• Engineers• Planners• Landscape Architects• G.I.S. Consultants
129 CAPISTA DRIVE - SHOREWOOD, ILLINOIS 60404
PH. (815) 744-6600 FAX (815) 744-0101
website: www.ruettigertonelli.com

R.T. & A. Dwg. No.: 2013-1130

PLAT OF HIGHWAYS

STATE OF ILLINOIS
DEPARTMENT OF TRANSPORTATION
FAP 573 U.S. ROUTE 30

LIMITS: AT DUGAN RD. COUNTY: KANE
SECTION: JOB NO.: R-91-004-14
STA. 107+50 TO STA. 112+00
SCALE: 1"=30' SHEET 7 OF 8 SHEETS

IDOT USE ONLY
RECEIVED
MAY 28 2014
PLATS & LEGALS

BUREAU OF LAND ACQUISITION
201 WEST CENTER COURT
SCHAUMBURG, ILLINOIS 60196

PART OF THE THE NW.1/4 OF SECTION 19, TWP. 38 N., R. 7 E. OF THE 3RD. P.M., IN KANE COUNTY, ILLINOIS.

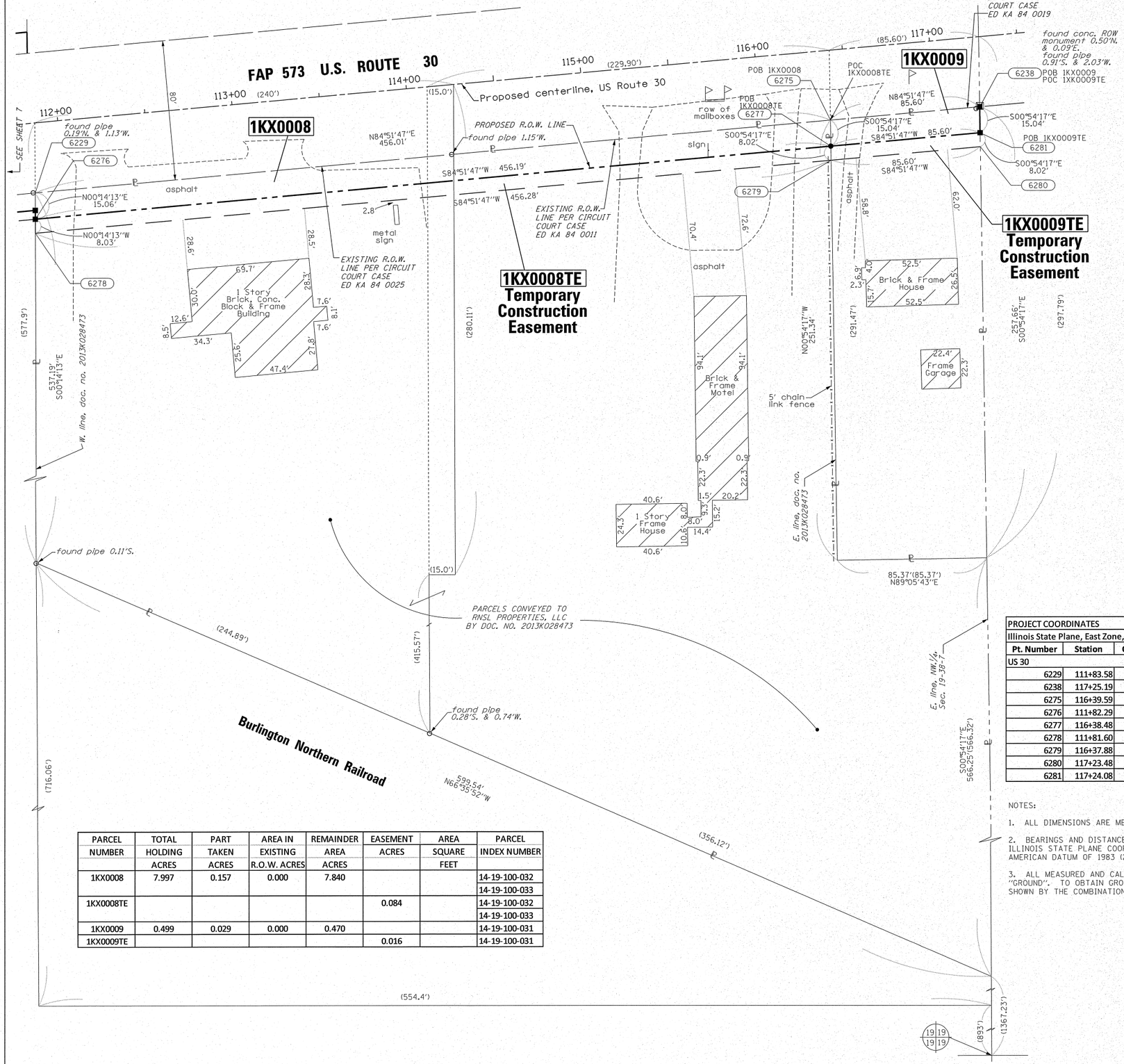

PARCEL NUMBER	TOTAL HOLDING ACRES	PART TAKEN ACRES	AREA IN EXISTING R.O.W. ACRES	REMAINDER AREA ACRES	EASEMENT ACRES	AREA SQUARE FEET	PARCEL INDEX NUMBER
1KX0008	7.997	0.157	0.000	7.840			14-19-100-032
							14-19-100-033
1KX0008TE					0.084		14-19-100-032
							14-19-100-033
1KX0009	0.499	0.029	0.000	0.470			14-19-100-031
1KX0009TE					0.016		14-19-100-031

PROJECT COORDINATES					
Illinois State Plane, East Zone, NAD 83 (2007)					
Pt. Number	Station	Offset		Northing	Easting
US 30					
6229	111+83.58	40.01	RT.	1856473.658	942930.277
6238	117+25.19	40.04	RT.	1856522.152	943469.713
6275	116+39.59	40.04	RT.	1856514.488	943384.457
6276	111+82.29	55.01	RT.	1856458.603	942930.340
6277	116+38.48	55.04	RT.	1856499.449	943384.694
6278	111+81.60	63.01	RT.	1856450.574	942930.373
6279	116+37.88	63.04	RT.	1856491.428	943384.821
6280	117+23.48	63.04	RT.	1856499.092	943470.077
6281	117+24.08	55.04	RT.	1856507.113	943469.951

NOTES:

1. ALL DIMENSIONS ARE MEASURED UNLESS OTHERWISE SPECIFIED.

2. BEARINGS AND DISTANCES SHOWN HEREON REFERENCE THE ILLINOIS STATE PLANE COORDINATE SYSTEM EAST ZONE, NORTH AMERICAN DATUM OF 1983 (2007 ADJUSTMENT) "GRID".

3. ALL MEASURED AND CALCULATED DISTANCES ARE "GRID" NOT "GROUND". TO OBTAIN GROUND DISTANCES, DIVIDE GRID DISTANCES SHOWN BY THE COMBINATION FACTOR OF 0.9999432656.

LEGEND

SECTION CORNER (9 10 16 15)

QUARTER SECTION CORNER (16 15)

GRAPHIC SCALE FEET 0 30

SCALE: 1"= 30'

- SECTION / QUARTER SECTION LINE
- PLATTED LOT LINES
- PROPERTY (DEED) LINE
- APL — APPARENT PROPERTY LINE
- EXISTING CENTERLINE
- PROPOSED CENTERLINE
- EXISTING RIGHT OF WAY LINE
- PROPOSED RIGHT OF WAY LINE
- EXISTING EASEMENT
- PROPOSED EASEMENT
- AC — EXISTING ACCESS CONTROL LINE
- AC — PROPOSED ACCESS CONTROL LINE
- 129.32' MEASURED DIMENSION
- 129.32' (COMP) COMPUTED DIMENSION
- (129.32') RECORDED DIMENSION
- EXISTING BUILDING

- ○ IRON PIPE OR ROD FOUND
- ⊕ "MAG" NAIL SET
- + CUT CROSS FOUND OR SET
- ● 5 / 8" REBAR SET
- ■ STAKING OF PROPOSED RIGHT OF WAY. SET DIVISION OF HIGHWAYS SURVEY MARKER TO MONUMENT THE POSITION SHOWN. IDENTIFIED BY INSCRIPTION DATA AND SURVEYORS REGISTRATION NUMBER.
- ■ M STAKING OF PROPOSED RIGHT OF WAY IN CULTIVATED AREAS. BURIED 5/8 INCH METAL ROD 20 INCHES BELOW GROUND TO MARK FUTURE SURVEY MARKER POSITION IDENTIFIED BY COLORED PLASTIC CAP BEARING SURVEYORS REGISTRATION NUMBER.
- PERMANENT SURVEY MARKER, I.D.O.T. STANDARD 2135 (TO BE SET BY OTHERS)
- □ RIGHT OF WAY STAKING PROPOSED TO BE SET

STATE OF ILLINOIS)
)SS
COUNTY OF WILL)

THIS IS TO CERTIFY THAT I, KENNETH J. PESAVENTO, AN ILLINOIS PROFESSIONAL LAND SURVEYOR, (WE, RUETTIGER, TONELLI & ASSOCIATES AN ILLINOIS PROFESSIONAL DESIGN FIRM LAND SURVEYING CORPORATION, NUMBER 184-001251,) HAVE SURVEYED THE PLAT OF HIGHWAYS SHOWN HEREON IN SECTIONS 18 & 19, TOWNSHIP 38 NORTH, RANGE 7 EAST OF THE THIRD PRINCIPAL MERIDIAN, KANE COUNTY, THAT THE SURVEY IS TRUE AND COMPLETE AS SHOWN TO THE BEST OF MY KNOWLEDGE AND BELIEF, THAT THE PLAT CORRECTLY REPRESENTS SAID SURVEY, THAT ALL MONUMENTS FOUND AND ESTABLISHED ARE OF PERMANENT QUALITY AND OCCUPY THE POSITIONS SHOWN THEREON AND THAT THE MONUMENTS ARE SUFFICIENT TO ENABLE THE SURVEY TO BE RETRACED, MADE FOR THE DEPARTMENT OF TRANSPORTATION, STATE OF ILLINOIS.

DATED AT _____, ILLINOIS THIS __ DAY OF _____ 20 __ A.D.

_____
ILLINOIS PROFESSIONAL LAND SURVEYOR NO. 3425
LICENSE EXPIRATION DATE: 11-30-2014

THIS PROFESSIONAL SERVICE CONFORMS TO THE CURRENT ILLINOIS MINIMUM STANDARDS FOR A BOUNDARY SURVEY.

R T & A
Ruettiger, Tonelli & Associates, Inc.
Surveyors • Engineers • Planners • Landscape Architects • G.I.S. Consultants
129 CAPISTA DRIVE - SHOREWOOD, ILLINOIS 60404
PH. (815) 744-6600 FAX (815) 744-0101
website: www.ruettigertonelli.com

R.T. & A. Dwg. No.: 2013-1130

PLAT OF HIGHWAYS

STATE OF ILLINOIS
DEPARTMENT OF TRANSPORTATION
FAP 573 U.S. ROUTE 30

LIMITS: AT DUGAN RD. COUNTY: KANE
SECTION: JOB NO.: R-91-004-14
STA. 112+00 TO STA. 117+50
SCALE: 1"=30' SHEET 8 OF 8 SHEETS

BUREAU OF LAND ACQUISITION
201 WEST CENTER COURT
SCHAUMBURG, ILLINOIS 60196

REVISION DATE: 02/04/2014 REVISION MADE BY: TLW