01-30-15 LETTING ITEM 024

F.A.P. RTE.	SECTION	COUNTY	TOTAL SHEETS	SHEET NO.
332	(3)BR	IROQUOIS	100	1
	ILLINOIS	CONTRACT NO. 66736		

STATE OF ILLINOIS
DEPARTMENT OF TRANSPORTATION
DIVISION OF HIGHWAYS

PROPOSED HIGHWAY PLANS

F.A.P. 332 (IL ROUTE 1)
SECTION (3)BR
PROJECT: ACNHPP-0332(122)
STRUCTURE REPLACEMENT
IROQUOIS COUNTY

C-93-010-08

D-93-048-06 P-93-045-05

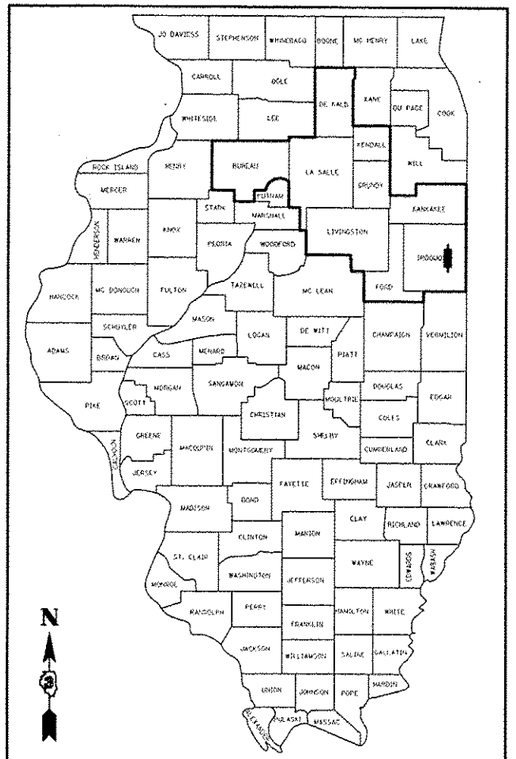

LOCATION OF SECTION INDICATED THUS:-

FUNCTIONAL CLASSIFICATION
RURAL OTHER PRINCIPAL ARTERIAL
2011 ADT = 3300
2029 ADT = 5800
P.V. = 91% S.U. = 3.5% M.U. = 6.5%

INDEX OF SHEETS

1	COVER SHEET
2	HIGHWAY STANDARDS, GENERAL NOTES AND COMMITMENTS
3-7	SUMMARY OF QUANTITIES
8-12	TYPICAL SECTIONS
13-15	SCHEDULE OF QUANTITIES
16	ALIGNMENT AND BENCHMARKS
17	SURVEY TIES
18-23	PLAN & PROFILE SHEETS
24-30	STAGE CONSTRUCTION
31	EROSION CONTROL PLAN
32-65	BRIDGE PLANS S.N. 038-0219 (PR.)/ 038-0021 (EX.)
66-68	DETAILS
69-100	CROSS SECTIONS

FOR LIST OF STANDARDS, SEE SHEET NO. 2

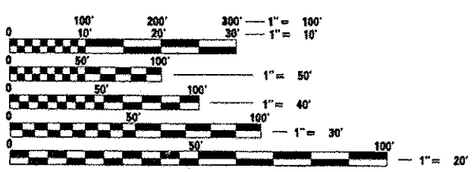

FULL SIZE PLANS HAVE BEEN PREPARED USING STANDARD ENGINEERING SCALES. REDUCED SIZED PLANS WILL NOT CONFORM TO STANDARD SCALES. IN MAKING MEASUREMENTS ON REDUCED PLANS, THE ABOVE SCALES MAY BE USED.

J.U.L.I.E.
JOINT UTILITY LOCATION INFORMATION FOR EXCAVATION
1-800-892-0123
OR 811

DISTRICT 3 NO. (815) 434-6131
PROJECT ENGINEER: JOE KANNEL, PE
UNIT CHIEF: MICHELE LINDEMANN, PE
CONTRACT NO. 66736

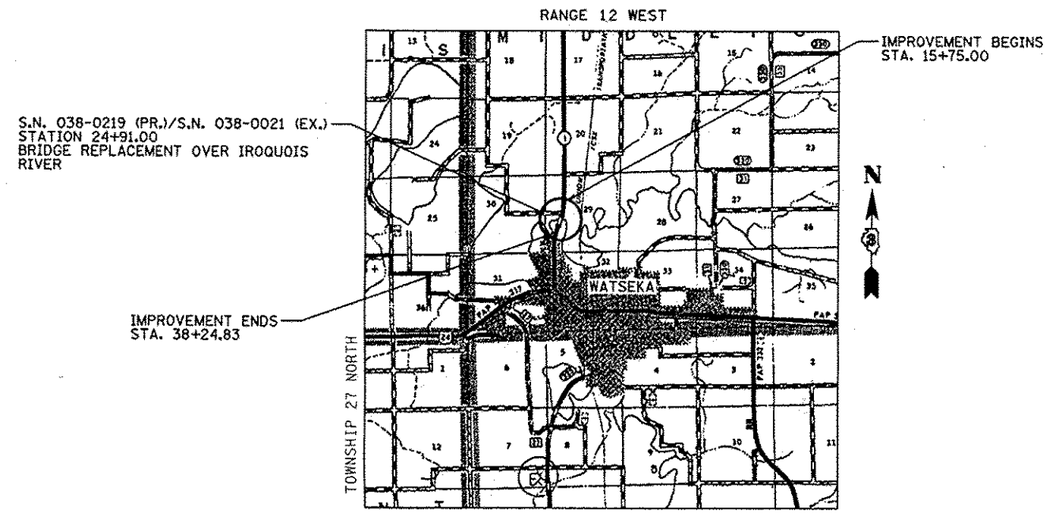

LOCATION MAP

3 2 1 0 1 2 3 MILES
APPROXIMATE SCALE

Farnsworth GROUP, INC.
2709 McGraw Drive
Bloomington, Illinois 61704
309/663-8435, 309/663-1571 fax

GROSS LENGTH = 2246.74 FT. = 0.426 MILE
NET LENGTH = 2246.74 FT. = ~~0.246~~ MILE 0.426

MARK S. WYLIE 043716 REGISTERED PROFESSIONAL ENGINEER OF ILLINOIS

Mark S. Wylie Date 4/10/14
MARK S. WYLIE
ILLINOIS PROFESSIONAL ENGINEER
NO. 062-043716
EXPIRATION 11/30/15

STATE OF ILLINOIS
DEPARTMENT OF TRANSPORTATION
DIVISION OF HIGHWAYS

SUBMITTED 9-30 2014
Paul Loftus
DEPUTY DIRECTOR OF HIGHWAYS, REGION ENGINEER
Dec 18 2014
John D. Baranzelli P.E. for
acting ENGINEER OF DESIGN AND ENVIRONMENT
Dec 18 2014
Omer Osman P.E. for
DIRECTOR OF HIGHWAYS, CHIEF ENGINEER

PRINTED BY THE AUTHORITY OF THE STATE OF ILLINOIS

DATE: 04/10/14 24-8052

HIGHWAY STANDARDS

000001-06	STANDARD SYMBOLS, ABBREVATIONS AND PATTERNS
001001-02	AREAS OF REINFORCEMENT BARS
001006	DECIMAL OF AN INCH AND OF A FOOT
280001-07	TEMPORARY EROSION CONTROL SYSTEMS
406201-01	MAILBOX TURNOUT
420401-11	BRIDGE APPROACH PAVEMENT CONNECTOR
515001-03	NAME PLATE FOR BRIDGES
542301-03	PRECAST REINFORCED CONCRETE FLARED END SECTION
542401-01	METAL END SECTION FOR PIPE CULVERTS
601101-01	CONCRETE HEADWALL FOR PIPE DRAIN
~~609006-05~~	~~BRIDGE APPROACH PAVEMENT (DRAIN DETAIL)~~
630001-10	STEEL PLATE BEAM GUARDRAIL
630201-06	PCC/HMA STABILIZATION AT STEEL PLATE BEAM GUARDRAIL
630301-06	SHOULDER WIDENING FOR TYPE 1 (SPECIAL) GUARDRAIL TERMINALS
631031-13	TRAFFIC BARRIER TERMINAL, TYPE 6
635006-03	REFLECTOR AND TERMINAL MARKER PLACEMENT
635011-02	REFLECTOR MARKER AND MOUNTING DETAILS
701001-02	OFF-RD OPERATIONS, 2L, 2W, MORE THAN 4.5m (15') AWAY
701006-05	OFF-RD OPERATIONS, 2L, 2W, 4.5 m (15') TO 600 m (24") FROM PAVEMENT EDGE
701011-04	OFF-RD MOVING OPERATIONS, 2L, 2W, DAY ONLY≥
701201-04	LANE CLOSURE, 2L, 2W, DAY ONLY FOR SPEEDS 45 MPH
701301-04	LANE CLOSURE, 2L, 2W, SHORT TIME OPERATIONS ≥
701306-03	LANE CLOSURE, 2L, 2W, SLOW MOVING OPERATIONS DAY ONLY, FOR SPEEDS 45 MPH
701311-03	LANE CLOSURE 2L, 2W MOVING OPERATIONS-DAY ONLY
701321-13	LANE CLOSURE, 2L, 2W, BRIDGE REPAIR WITH BARRIER ≥
701326-04	LANE CLOSURE, 2L, 2W, PAVEMENT WIDENING, FOR SPEEDS 45 MPH
701901-04	TRAFFIC CONTROL DEVICES
704001-08	TEMPORARY CONCRETE BARRIER
780001-05	TYPICAL PAVEMENT MARKINGS
781001-03	TYPICAL APPLICATIONS RAISED REFLECTIVE PAVEMENT MARKERS

COMMITMENTS

NONE

GENERAL NOTES

THE THICKNESS OF HMA SHOWN ON THE PLANS IS THE NOMINAL THICKNESS. DEVIATIONS FROM THE NOMINAL THICKNESS WILL BE PERMITTED WHEN SUCH DEVIATIONS OCCUR DUE TO IRREGULARITIES IN THE EXISTING SURFACE OR BASE ON WHICH THE HMA IS PLACED.

STUMP REMOVAL SHALL BE INCLUDED IN THE EARTH EXCAVATION QUANTITY.

THE HMA SURFACE OF ALL MAILBOX TURNOUTS, PRIVATE ENTRANCES, COMMERCIAL ENTRANCES, AND SIDE ROADS SHALL BE MADE NEATLY, IN A WORKMANLIKE MANNER, AND SHALL ACCURATELY CONFORM TO THE SHAPES AND DIMENSIONS AS SHOWN ON THE PLAN DETAILS. IF REQUIRED BY THE ENGINEER, THE CONTRACTOR SHALL BE REQUIRED TO SAW CUT THE HMA SURFACE TO CONFORM TO THE SHAPES AND DIMENSIONS SHOWN ON THE PLAN DETAILS. THIS WORK SHALL BE INCLUDED IN THE COST OF THE HMA SURFACE.

EXCEPT AS NOTED ON THE PLANS, PAVEMENT GRADES SHOWN ARE AT THE TOP OF PAVEMENT SURFACES.

BEFORE ORDERING PIPE CULVERTS OR PIPE DRAINS, THE CONTRACTOR SHALL CONSULT THE ENGINEER FOR EXACT LENGTHS.

THE ENGINEER WILL BE THE SOLE JUDGE CONCERNING CURING TIME FOR THE VARIOUS HMA LIFTS.

FOR STABILIZATION, ALL TYPE III BARRICADES SHALL REQUIRE A MINIMUM OF FOUR SAND BAGS PER BARRICADE.

SEEDING SHALL NOT BE PERMITTED AT ANY TIME WHEN THE GROUND IS FROZEN, WET, OR IN AN UNTILLABLE CONDITION. LOCATIONS TO BE SEEDED WILL BE DETERMINED BY THE ENGINEER.

WHERE SECTION OR SUBSECTION MONUMENTS ARE ENCOUNTERED, THE ENGINEER SHALL BE NOTIFIED BEFORE SUCH MONUMENTS ARE REMOVED. THE CONTRACTOR SHALL PROTECT AND CAREFULLY PRESERVE ALL MONUMENTS UNTIL AN AUTHORIZED SURVEYOR OR AGENT HAS WITNESSED OR OTHERWISE REFERENCED THEIR LOCATION. THE CONTRACTOR SHALL BE RESPONSIBLE FOR HAVING AN AUTHORIZED SURVEYOR REESTABLISH ANY SECTION OR SUBSECTION MONUMENTS DESTROYED BY HIS OPERATIONS.

ONLY THOSE TREES DESIGNATED BY THE ENGINEER OR LISTED IN THE TREE REMOVAL SCHEDULE SHALL BE REMOVED. THE CONTRACTOR SHALL PROTECT ALL REMAINING TREES FROM DAMAGE DUE TO HIS OPERATIONS.

THE FINISHED EARTHWORK SHALL HAVE A VEGETATION SUSTAINING SOIL COVERING THE TOP FOUR INCHES IN AREAS TO BE SEEDED OR SODDED. THE VEGETATION SUSTAINING SOIL REQUIRED WILL NOT BE PAID FOR SEPARATELY BUT SHALL BE INCLUDED IN THE COST OF "FURNISHED EXCAVATION".

ON EXISTING PAVEMENT WHICH MAY BE SUPERELEVATED, THE NEW HMA PAVEMENT SHALL BE BUILT WITH THE SAME SUPERELEVATION UNLESS NEW SUPERELEVATION RATES ARE GIVEN ON THE PLANS.

ALL ELEVATIONS REFER TO U.S.G.S. MEAN SEA LEVEL DATUM.

ABANDONED UNDERGROUND UTILITIES THAT CONFLICT WITH CONSTRUCTION SHALL BE DISPOSED OF OUTSIDE THE LIMITS OF THE RIGHT OF WAY ACCORDING TO ARTICLE 202.03 OF THE STANDARD SPECIFICATIONS AND AS DIRECTED BY THE ENGINEER. THIS WORK WILL NOT BE PAID FOR SEPARATELY, BUT SHALL BE INCLUDED IN THE COST OF EARTH EXCAVATION.

ANY REFERENCE TO A STANDARD IN THESE PLANS SHALL BE INTERPRETED TO MEAN THE EDITION AS INDICATED BY THE SUBNUMBER SHOWN IN THE LIST OF STANDARDS INCLUDED IN THESE PLANS.

THE FOLLOWING RATES OF APPLICATION HAVE BEEN USED IN CALCULATING PLAN QUANTITIES:

GRANULAR MATERIALS	2.05	TONS / CU YD
HMA RESURFACING	112	LBS / SQ YD / IN
SHORT TERM PAVEMENT MARKING	10	FT /100 FT OF APPLICATION
MIX FOR CRACKS, JTS & FLGWYS	0.0003	TONS / SQ YD
LEVEL BINDER (HAND METHOD)	0.0005	TONS / SQ YD
SUPPLEMENTAL WATERING	3	GAL / SQ YD / APPLICATION
CALCIUM CHLORIDE	2	LB / SQ YD / APPLICATION
AGGREGATE DITCH CHECKS	5	TONS AGGREGATE

THE CONTRACTOR SHALL CONTACT JULIE AT LEAST 48 HOURS PRIOR TO EXCAVATION TO DETERMINE WHICH UTILITIES ARE IN THE AREA.

MEMBERS OF JULIE KNOWN TO BE WITHIN THE LIMITS OF IMPROVEMENTS ARE:
- AT&T
- EASTERN ILLINI ELECTRIC COOPERATIVE

STATE OF ILLINOIS
DEPARTMENT OF TRANSPORTATION
DISTRICT THREE

REVIEWED BY: _____ DISTRICT STUDIES & PLANS ENGINEER

DATE: 9-30-14

EXAMINED BY: _____ DISTRICT CONSTRUCTION ENGINEER

_____ DISTRICT MATERIALS ENGINEER

_____ DISTRICT OPERATIONS ENGINEER

	CODE NO.	ITEM	UNIT	TOTAL QUANTITY	CONSTRUCTION CODE: ROADWAY 0004 RURAL	CONSTRUCTION CODE: BRIDGE 0011 S. N. 038-0219
	20100110	TREE REMOVAL (6 TO 15 UNITS DIAMETER)	UNIT	59	59	
	20100210	TREE REMOVAL (OVER 15 UNITS DIAMETER)	UNIT	24	24	
	20101000	TEMPORARY FENCE	FOOT	2, 325	2, 325	
	20200100	EARTH EXCAVATION	CU YD	2, 010	2, 010	
	20300100	CHANNEL EXCAVATION	CU YD	1, 930	1, 930	
	20400800	FURNISHED EXCAVATION	CU YD	10, 225	10, 225	
	20800150	TRENCH BACKFILL	CU YD	188	188	
*	25000300	SEEDING, CLASS 3	ACRE	4	4	
*	25000400	NITROGEN FERTILIZER NUTRIENT	POUND	361	361	
*	25000500	PHOSPHORUS FERTILIZER NUTRIENT	POUND	361	361	
*	25000600	POTASSIUM FERTILIZER NUTRIENT	POUND	361	361	
*	25100635	HEAVY DUTY EROSION CONTROL BLANKET	SQ YD	19, 359	19, 359	
*	28000250	TEMPORARY EROSION CONTROL SEEDING	POUND	1, 200	1, 200	
	28000305	TEMPORARY DITCH CHECKS	FOOT	250	250	
	28000400	PERIMETER EROSION BARRIER	FOOT	4, 785	4, 785	
	28000500	INLET AND PIPE PROTECTION	EACH	2	2	
	28100107	STONE RIPRAP, CLASS A4	SQ YD	2, 313		2, 313
	28200200	FILTER FABRIC	SQ YD	2, 313		2, 313
	31100910	SUBBASE GRANULAR MATERIAL, TYPE A 12"	SQ YD	2, 846	2, 846	
	35100900	AGGREGATE BASE COURSE, TYPE A 10"	SQ YD	1, 177	1, 177	
	35501320	HOT-MIX ASPHALT BASE COURSE, 9"	SQ YD	335	335	

21

* SPECIALTY ITEM

CODE NO.	ITEM	UNIT	TOTAL QUANTITY	CONSTRUCTION CODE: ROADWAY 0004 RURAL	CONSTRUCTION CODE: BRIDGE 0011 S.N. 038-0219
35600712	HOT-MIX ASPHALT BASE COURSE WIDENING, 9"	SQ YD	639	639	
40200900	AGGREGATE SURFACE COURSE, TYPE B	CU YD	55	55	
40600275	BITUMINOUS MATERIALS (PRIME COAT)	POUND	17,805	17,805	
40600625	LEVELING BINDER (MACHINE METHOD), N50	TON	42	42	
40600982	HOT-MIX ASPHALT SURFACE REMOVAL - BUTT JOINT	SQ YD	408	408	
40600990	TEMPORARY RAMP	SQ YD	200	200	
40603082	HOT-MIX ASPHALT BINDER COURSE, IL-19.0 FG, N50	TON	2,135	2,135	
40603310	HOT-MIX ASPHALT SURFACE COURSE, MIX "C", N50	TON	743	743	
42001430	BRIDGE APPROACH PAVEMENT CONNECTOR (FLEXIBLE)	SQ YD	55	55	
44000100	PAVEMENT REMOVAL	SQ YD	1,520	1,520	
44000158	HOT-MIX ASPHALT SURFACE REMOVAL, 2 1/4"	SQ YD	1,000	1,000	
44004000	PAVED DITCH REMOVAL	FOOT	270	270	
44004250	PAVED SHOULDER REMOVAL	SQ YD	510	510	
48101500	AGGREGATE SHOULDERS, TYPE B 6"	SQ YD	385	385	
48203023	HOT-MIX ASPHALT SHOULDERS, 6 1/2"	SQ YD	1,715	1,715	
48203033	HOT-MIX ASPHALT SHOULDERS, 9"	SQ YD	1,970	1,970	
48203100	HOT-MIX ASPHALT SHOULDERS	TON	25	25	
50100100	REMOVAL OF EXISTING STRUCTURES	EACH	1		1
50105220	PIPE CULVERT REMOVAL	FOOT	266	266	
50200100	STRUCTURE EXCAVATION	CU YD	430		430
50200300	COFFERDAM EXCAVATION	CU YD	563		563
50201121	COFFERDAM (TYPE 2) (LOCATION - 1)	EACH	1		1

22

* SPECIALTY ITEM

CODE NO.	ITEM	UNIT	TOTAL QUANTITY	CONSTRUCTION CODE: ROADWAY 0004 RURAL	CONSTRUCTION CODE: BRIDGE 0011 S. N. 038-0219
50201122	COFFERDAM (TYPE 2) (LOCATION - 2)	EACH	1		1
50300100	FLOOR DRAINS	EACH	44		44
50300225	CONCRETE STRUCTURES	CU YD	593.7		593.7
50300255	CONCRETE SUPERSTRUCTURE	CU YD	679		679
50300260	BRIDGE DECK GROOVING	SQ YD	1,718		1,718
50300265	SEAL COAT CONCRETE	CU YD	122.6		122.6
50300280	CONCRETE ENCASEMENT	CU YD	9.8		9.8
50300300	PROTECTIVE COAT	SQ YD	2,128		2,128
50401005	FURNISHING AND ERECTING PRECAST PRESTRESSED CONCRETE I-BEAMS, 48 IN.	FOOT	2,047		2,047
50800205	REINFORCEMENT BARS, EPOXY COATED	POUND	233,900		233,900
50800515	BAR SPLICERS	EACH	1,654		1,654
50800530	MECHANICAL SPLICERS	EACH	522		522
51201900	FURNISHING STEEL PILES HP14X89	FOOT	6,211		6,211
51202305	DRIVING PILES	FOOT	6,211		6,211
51203900	TEST PILE STEEL HP14X89	EACH	2		2
51500100	NAME PLATES	EACH	1		1
542A1903	PIPE CULVERTS, CLASS A, TYPE 3 18"	FOOT	214	214	
54213663	PRECAST REINFORCED CONCRETE FLARED END SECTIONS 18"	EACH	4	4	
59100100	GEOCOMPOSITE WALL DRAIN	SQ YD	96		96
* 63000001	STEEL PLATE BEAM GUARDRAIL, TYPE A, 6 FOOT POSTS	FOOT	2,212.5	2,212.5	
* 63100085	TRAFFIC BARRIER TERMINAL, TYPE 6	EACH	4	4	

2.1

* SPECIALTY ITEM

	CODE NO.	ITEM	UNIT	TOTAL QUANTITY	CONSTRUCTION CODE: ROADWAY 0004 RURAL	CONSTRUCTION CODE: BRIDGE 0011 S. N. 038-0219
*	63100167	TRAFFIC BARRIER TERMINAL, TYPE 1 (SPECIAL) TANGENT	EACH	4	4	
	63200310	GUARDRAIL REMOVAL	FOOT	2,520	2,520	
*	66900200	NON-SPECIAL WASTE DISPOSAL	CU YD	215	215	
	66700205	PERMANENT SURVEY MARKERS, TYPE I	EACH	2	2	
*	66900450	SPECIAL WASTE PLANS AND REPORTS	L SUM	1	1	
	67000400	ENGINEER'S FIELD OFFICE, TYPE A	CAL MO	6	6	
*	66900530	SOIL DISPOSAL ANALYSIS	EACH	1	1	
	67100100	MOBILIZATION	L SUM	1	1	
	70100405	TRAFFIC CONTROL AND PROTECTION, STANDARD 701321	EACH	1	1	
	70100450	TRAFFIC CONTROL AND PROTECTION, STANDARD 701201	L SUM	1	1	
	70100460	TRAFFIC CONTROL AND PROTECTION, STANDARD 701306	L SUM	1	1	
	70100500	TRAFFIC CONTROL AND PROTECTION, STANDARD 701326	L SUM	1	1	
	70103815	TRAFFIC CONTROL SURVEILLANCE	CAL DA	184	184	
	70106500	TEMPORARY BRIDGE TRAFFIC SIGNALS	EACH	1	1	
	70300100	SHORT TERM PAVEMENT MARKING	FOOT	680	680	
	70300220	TEMPORARY PAVEMENT MARKING - LINE 4"	FOOT	4,950	4,950	
	70300240	TEMPORARY PAVEMENT MARKING - LINE 6"	FOOT	640	640	
	70301000	WORK ZONE PAVEMENT MARKING REMOVAL	SQ FT	4,606	4,606	
	70400100	TEMPORARY CONCRETE BARRIER	FOOT	1,987.5	1,987.5	
	70400200	RELOCATE TEMPORARY CONCRETE BARRIER	FOOT	1,987.5	1,987.5	
	70600250	IMPACT ATTENUATORS, TEMPORARY (NON- REDIRECTIVE), TEST LEVEL 3	EACH	4	4	
	70600350	IMPACT ATTENUATORS, RELOCATE (NON- REDIRECTIVE), TEST LEVEL 3	EACH	4	4	
*	78005110	EPOXY PAVEMENT MARKING - LINE 4"	FOOT	4,950	4,950	
*	78005130	EPOXY PAVEMENT MARKING - LINE 6"	FOOT	640	640	

* SPECIALTY ITEM

Rev.

Farnsworth GROUP, INC.
2160 McGraw Drive
Bloomington, Illinois 61704
309/663-8435, 309/663-1571 fax

DESIGNED - NAS/JJO	REVISED -		
DRAWN - JJO/DRR	REVISED -		
CHECKED - MSW	REVISED -		
DATE - 04/10/14	REVISED -		

STATE OF ILLINOIS
DEPARTMENT OF TRANSPORTATION

SUMMARY OF QUANTITIES

SCALE: | SHEET OF SHEETS | STA. TO STA.

F.A.P RTE.	SECTION	COUNTY	TOTAL SHEETS	SHEET NO.
332	(31BR	IROQUOIS	100	6

CONTRACT NO. 66736

ILLINOIS FED. AID PROJECT

24-8052

	CODE NO.	ITEM	UNIT	TOTAL QUANTITY	CONSTRUCTION CODE: ROADWAY 0004 RURAL	CONSTRUCTION CODE: BRIDGE 0011 S. N. 038-0219
*	78100100	RAISED REFLECTIVE PAVEMENT MARKER	EACH	30	30	
*	78200410	GUARDRAIL MARKERS, TYPE A	EACH	38	38	
*	78201000	TERMINAL MARKER - DIRECT APPLIED	EACH	4	4	
	78300200	RAISED REFLECTIVE PAVEMENT MARKER REMOVAL	EACH	30	30	
	X2130010	EXPLORATION TRENCH, SPECIAL	FOOT	200	200	
	X4400110	TEMPORARY PAVEMENT REMOVAL	SQ YD	1,513	1,513	
	X4401198	HOT-MIX ASPHALT SURFACE REMOVAL, VARIABLE DEPTH	SQ YD	1,963	1,963	
	X5860110	GRANULAR BACKFILL FOR STRUCTURES	CU YD	192		192
	Z0013798	CONSTRUCTION LAYOUT	L SUM	1	1	
	Z0026407	TEMPORARY SHEET PILING	SQ FT	866		866
	Z0030850	TEMPORARY INFORMATION SIGNING	SQ FT	42	42	
	Z0046304	PIPE UNDERDRAINS FOR STRUCTURES 4"	FOOT	176		176
	Z0062456	TEMPORARY PAVEMENT	SQ YD	848	848	

* SPECIALTY ITEM

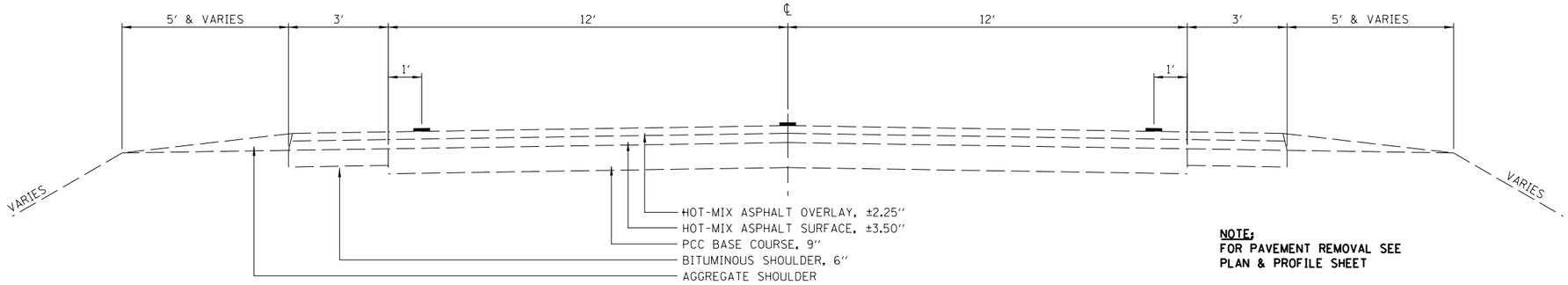

NOTE:
FOR PAVEMENT REMOVAL SEE
PLAN & PROFILE SHEET

EXISTING TYPICAL CROSS SECTION

F.A.P. 332 (IL 1)

STA 15+75 TO STA 23+19.71±

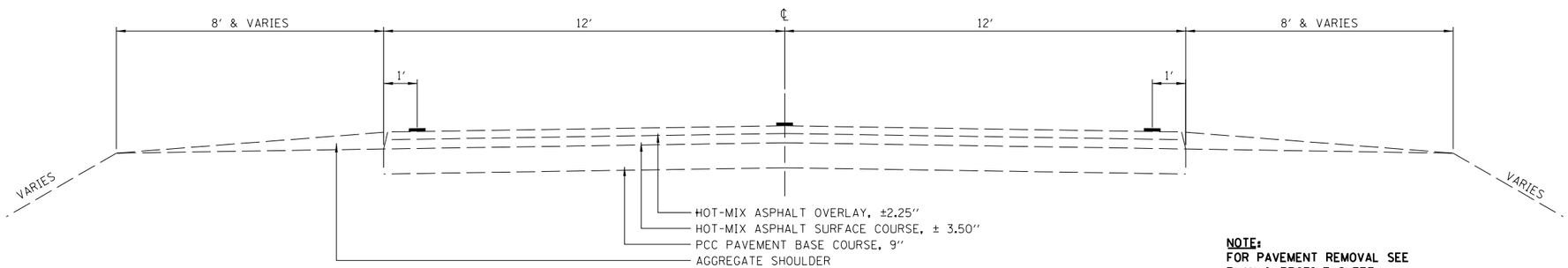

NOTE:
FOR PAVEMENT REMOVAL SEE
PLAN & PROFILE SHEET

EXISTING TYPICAL CROSS SECTION

F.A.P. 332 (IL 1)

STA 27+06.29± TO STA 38+21.74

MIXTURES TABLE

	HMA BINDER/BASE COURSE	HMA SURFACE	HMA LEVEL BINDER	HMA TEMP	HMA SHOULDERS
PG GRADE	PG64-22	PG64-22	PG64-22	PG64-22	PG64-22
DESIGN AIR VOIDS	4.0% @ N50	4.0% @ N50	4.0% @ N50	4.0% @ N50	4.0% @ N50
MIXTURE COMPOSITION	IL-19.0 FG	IL 9.5	IL 9.5	IL 9.5	IL-19.0 FG
FRICTION AGGREGATE	-	MIXTURE C	-	-	-
DENSITY CONTROL METHOD	QCP CORES	QCP CORES	SATISFACTION OF THE ENGINEER	CORES	CORES

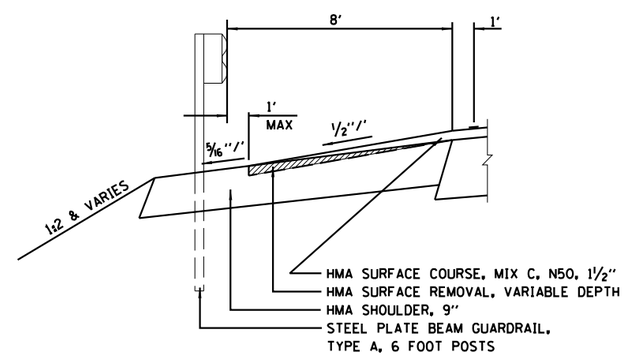

DETAIL AT GUARDRAIL

F.A.P. 332 (IL 1)

STA 21+23.50 LT TO STA 22+92.25 LT
STA 26+66.75 LT TO STA 37+85.50 LT

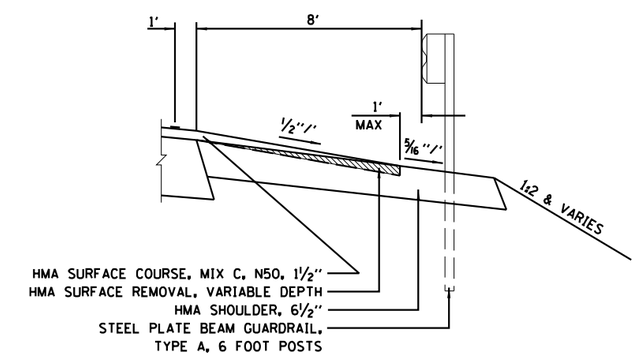

DETAIL AT GUARDRAIL

F.A.P. 332 (IL 1)

STA 21+21.50 RT TO STA 23+15.25 RT
STA 26+89.75 RT TO STA 37+96.00 RT

Farnsworth GROUP, INC.
2709 McGraw Drive
Bloomington, Illinois 61704
309/663-8435, 309/663-1571 fax

DESIGNED - NAS/JJO	REVISED -	STATE OF ILLINOIS DEPARTMENT OF TRANSPORTATION	TYPICAL SECTIONS
DRAWN - JJO/DRR	REVISED -		
CHECKED - MSW	REVISED -		
DATE - 04/10/14	REVISED -		

SCALE: SHEET OF SHEETS STA. TO STA.

F.A.P RTE.	SECTION	COUNTY	TOTAL SHEETS	SHEET NO.
332	(3)BR	IROQUOIS	100	8

CONTRACT NO. 66736

ILLINOIS FED. AID PROJECT

24-8052

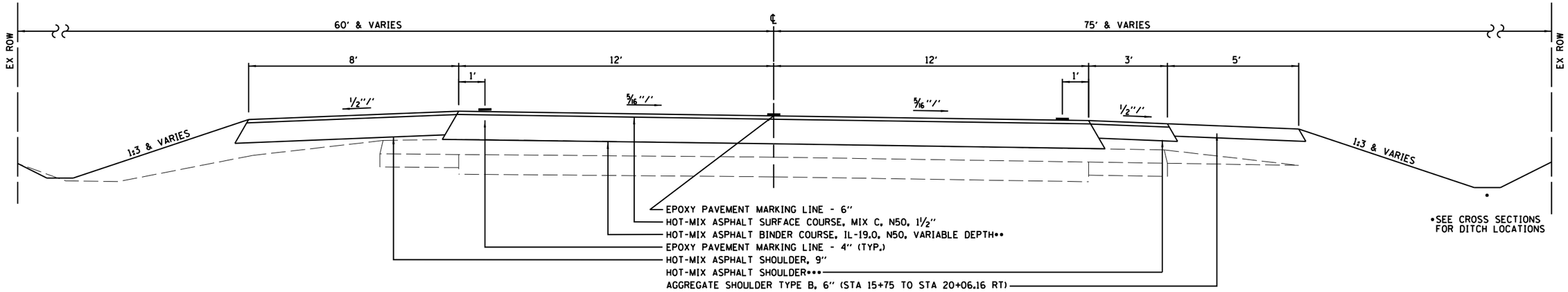

PROPOSED TYPICAL CROSS SECTION (1)

F.A.P. 332 (IL 1)

STA 15+75 TO STA 18+20

••VARIABLE DEPTH FROM 2 1/4" AT STA 16+68 TO 11 1/4" AT STA 18+20
•••VARIABLE DEPTH FROM 2 1/4" AT STA 15+75, RT TO 6 1/2" AT STA 17+40, RT
6 1/2" STA 17+40, RT TO STA 20+06.16, RT

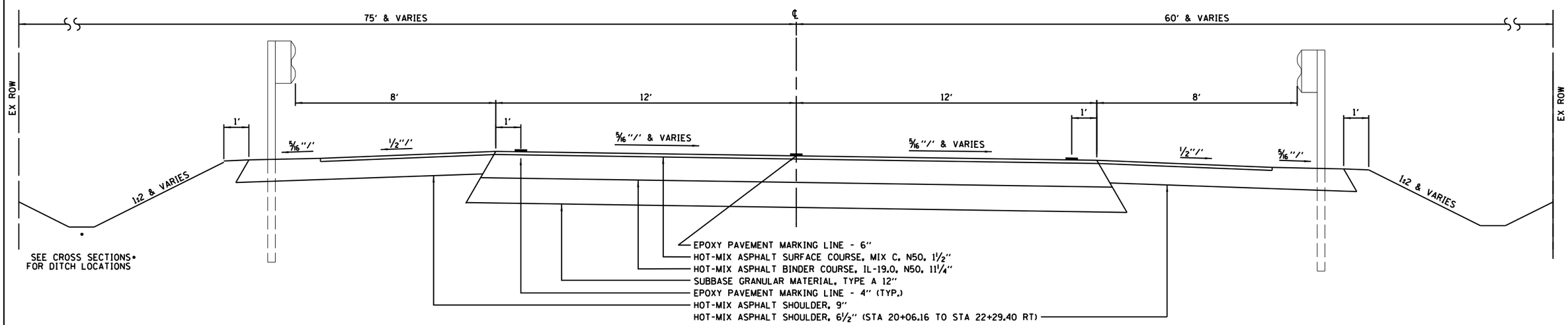

PROPOSED S.E. TRANSITION DATA	
FULL S.E. (MATCH EX)	STA 15+75.00 TO STA 19+99.40
S.E. RUNOFF	STA 19+99.40 TO STA 21+89.40
TAN RUNOFF	STA 21+89.40 TO STA 22+29.40

PROPOSED TYPICAL CROSS SECTION (2)

F.A.P. 332 (IL 1)

STA 18+20 TO STA 22+29.40

Farnsworth GROUP, INC.
2709 McGraw Drive
Bloomington, Illinois 61704
309/663-8435, 309/663-1571 fax

DESIGNED - NAS/JJO	REVISED -	STATE OF ILLINOIS DEPARTMENT OF TRANSPORTATION	TYPICAL SECTIONS
DRAWN - JJO/DRR	REVISED -		
CHECKED - MSW	REVISED -		
DATE - 04/10/14	REVISED -		

SCALE: SHEET OF SHEETS STA. TO STA.

F.A.P RTE.	SECTION	COUNTY	TOTAL SHEETS	SHEET NO.
332	(3)BR	IROQUOIS	100	9

CONTRACT NO. 66736

ILLINOIS FED. AID PROJECT

24-8052

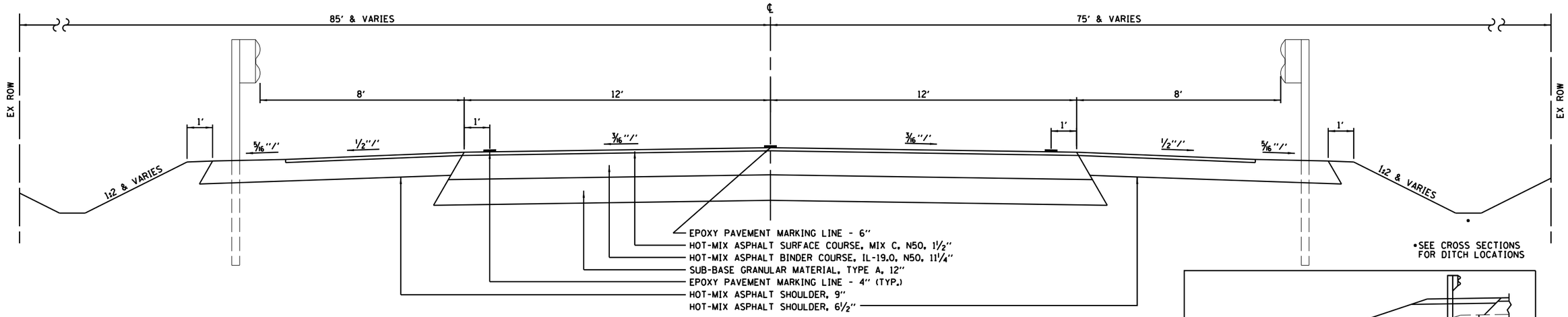

PROPOSED TYPICAL CROSS SECTION (3)

F.A.P. 332 (IL 1)

STA 22+29.40 TO STA 22+88.00
STA 26+94.00 TO STA 29+06.60

SEE STATE STANDARD 420401
BRIDGE APPROACH PAVEMENT CONNECTOR
STA 22+82.00 TO STA 22+88.00
STA 26+94.00 TO STA 27+00.00

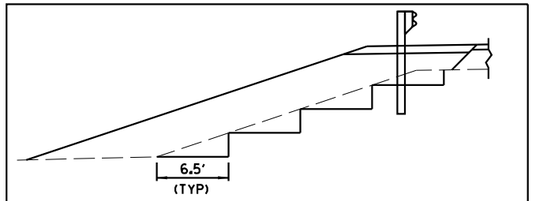

DETAIL OF SLOPE BENCHING••

••PRIOR TO CONSTRUCTING EMBANKMENT, THE EXISTING GROUND SHALL BE PREPARED AS SPECIFIED IN ARTICLE 205.04 OF THE STANDARD SPECIFICATIONS. IN ADDITION, THE CONTRACTOR SHALL CUT STEPS INTO THE EXISTING SLOPES BEFORE CONSTRUCTION OF THE EMBANKMENT IS STARTED. THE COST OF CUTTING THE STEPS WILL NOT BE PAID FOR SEPARATELY BUT WILL BE INCLUDED IN THE COST OF EMBANKMENT.

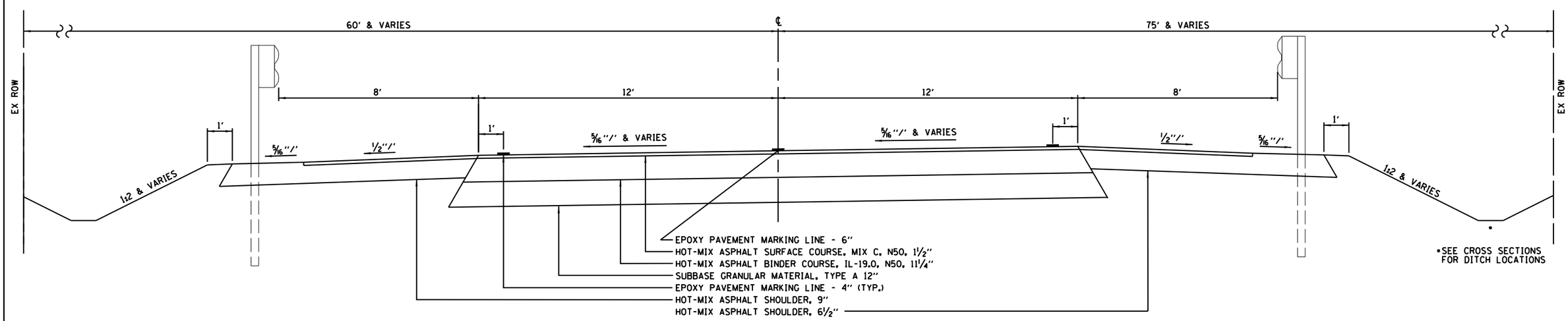

PROPOSED TYPICAL CROSS SECTION (4)

F.A.P. 332 (IL 1)

STA 29+06.60 TO STA 31+70.00

PROPOSED S.E. TRANSITION DATA	
TAN RUNOFF	STA 29+06.60 TO STA 29+46.60
S.E. RUNOFF	STA 29+46.60 TO STA 31+36.60
FULL S.E. (MATCH EX)	STA 31+36.60 TO STA 34+50.00

Farnsworth GROUP, INC.
2709 McGraw Drive
Bloomington, Illinois 61704
309/663-8435, 309/663-1571 fax

DESIGNED - NAS/JJO	REVISED -		
DRAWN - JJO/DRR	REVISED -		
CHECKED - MSW	REVISED -		
DATE - 04/10/14	REVISED -		

STATE OF ILLINOIS
DEPARTMENT OF TRANSPORTATION

TYPICAL SECTIONS

SCALE: | SHEET OF SHEETS | STA. TO STA.

F.A.P RTE.	SECTION	COUNTY	TOTAL SHEETS	SHEET NO.
332	(3)BR	IROQUOIS	100	10

CONTRACT NO. 66736

ILLINOIS FED. AID PROJECT

24-8052

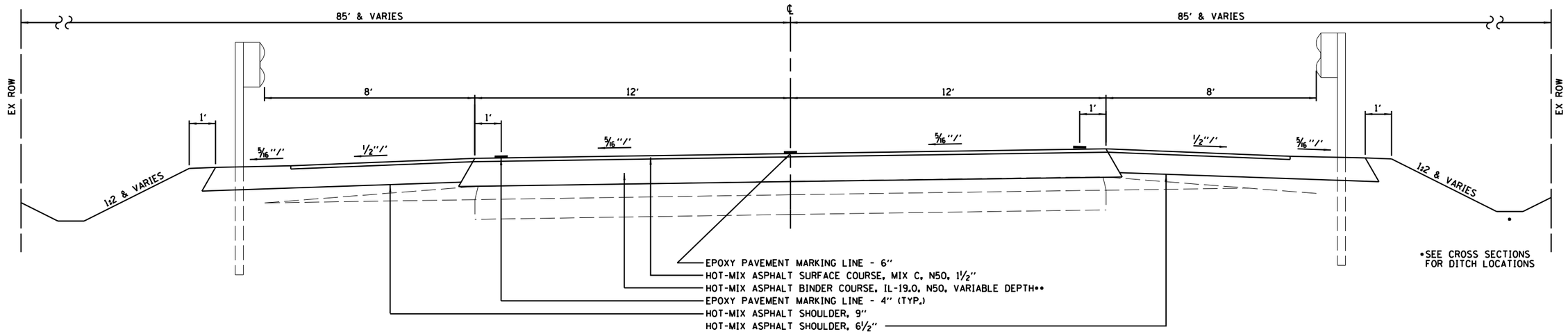

PROPOSED TYPICAL CROSS SECTION (5)

F.A.P. 332 (IL 1)

STA 31+70.00 TO STA 34+50.00

••VARIABLE DEPTH FROM 11 1/4" AT STA 31+70 TO 2 1/4" AT STA 33+60

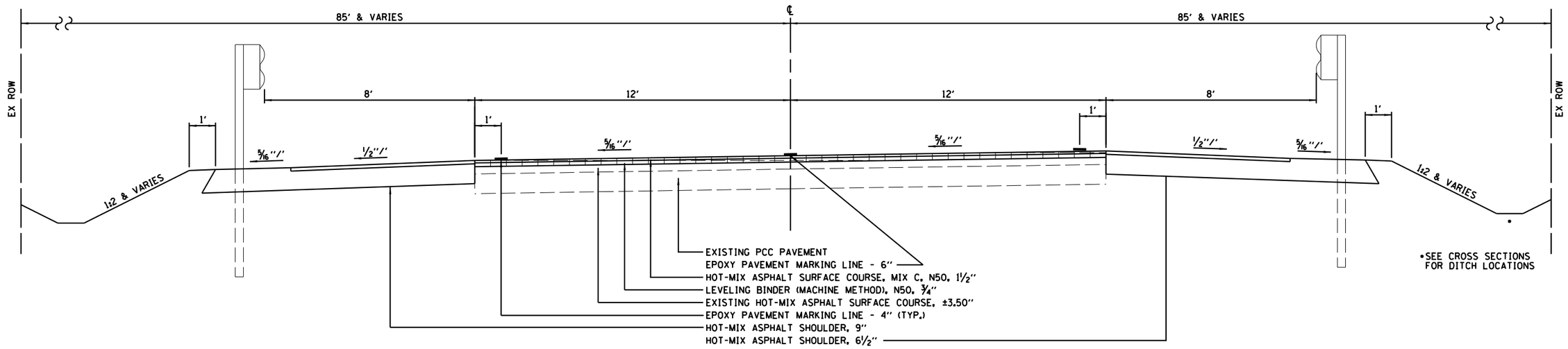

HOT-MIX ASPHALT SURFACE REMOVAL, 2 1/4"

PROPOSED TYPICAL CROSS SECTION (6)

F.A.P. 332 (IL 1)

STA 34+50.00 TO STA 38+24.83

Farnsworth GROUP, INC.
2709 McGraw Drive
Bloomington, Illinois 61704
309/663-8435, 309/663-1571 fax

DESIGNED - NAS/JJO	REVISED -	STATE OF ILLINOIS DEPARTMENT OF TRANSPORTATION	TYPICAL SECTIONS
DRAWN - JJO/DRR	REVISED -		
CHECKED - MSW	REVISED -		
DATE - 04/10/14	REVISED -		

SCALE: SHEET OF SHEETS STA. TO STA.

F.A.P RTE.	SECTION	COUNTY	TOTAL SHEETS	SHEET NO.
332	(3)BR	IROQUOIS	100	11

CONTRACT NO. 66736

ILLINOIS FED. AID PROJECT

24-8052

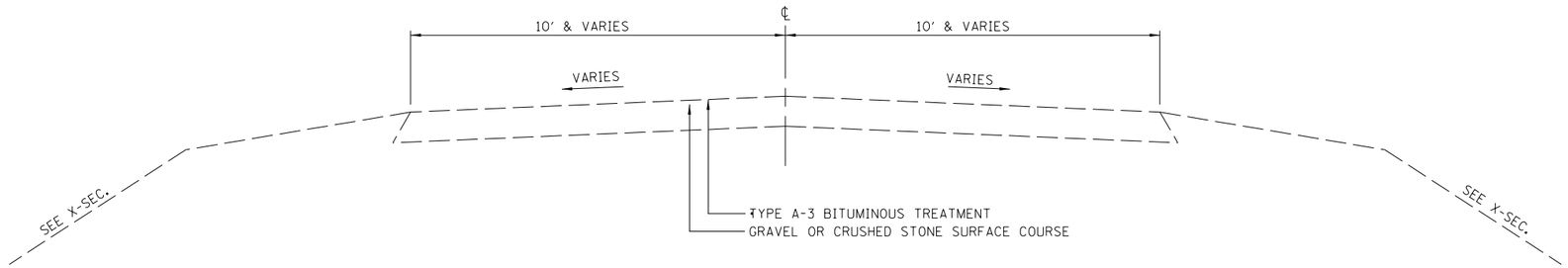

EXISTING TYPICAL CROSS SECTION

(T.R. 1950E)

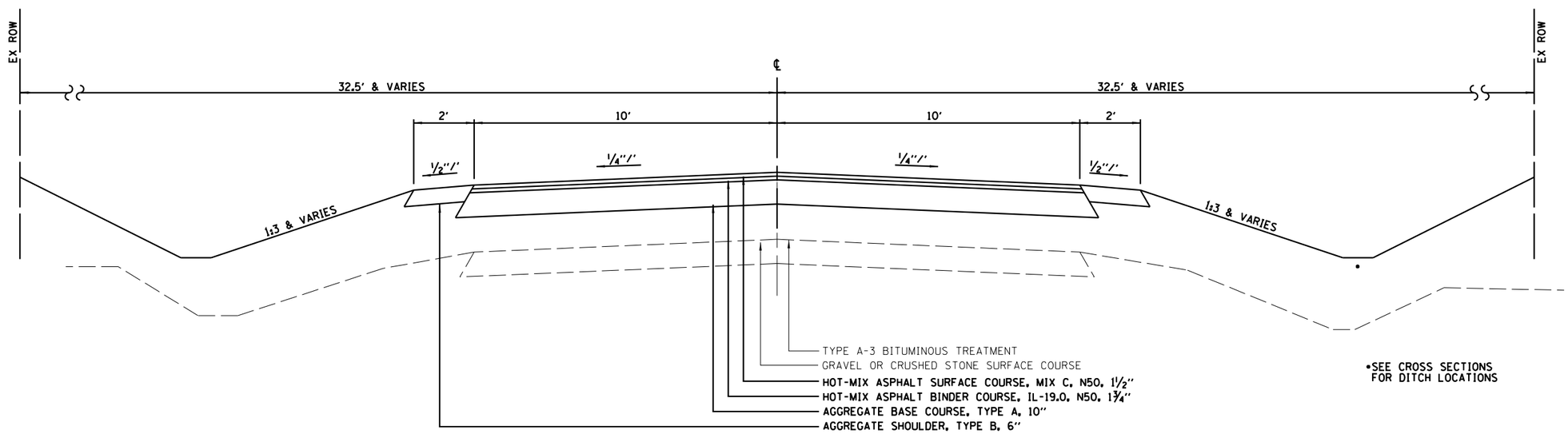

PROPOSED TYPICAL CROSS SECTION

(T.R. 1950E)

Farnsworth GROUP, INC.
2709 McGraw Drive
Bloomington, Illinois 61704
309/663-8435, 309/663-1571 fax

DESIGNED - NAS/JJO	REVISED -	STATE OF ILLINOIS DEPARTMENT OF TRANSPORTATION	TYPICAL SECTIONS
DRAWN - JJO/DRR	REVISED -		
CHECKED - MSW	REVISED -		
DATE - 04/10/14	REVISED -		SCALE: SHEET OF SHEETS STA. TO STA.

F.A.P RTE.	SECTION	COUNTY	TOTAL SHEETS	SHEET NO.
332	(3)BR	IROQUOIS	100	12
		CONTRACT NO. 66736		
	ILLINOIS	FED. AID PROJECT		

24-8052

TREE REMOVAL		
LOCATION	TREE REM 6 TO 15 UNITS DIA	TREE REM OVER 15 UNITS DIA
	UNIT	UNIT
STA 24+18 RT	14	
STA 24+27 RT	6	
STA 33+67 LT	10	
STA 147+41 LT		24
STA 147+50 LT	9	
STA 147+90 LT	6	
STA 148+29 LT	14	
TOTAL	59	24

LOCATION	EARTH EXCAVATION	TOTAL EXCAVATION ADJUSTED FOR 25% SHRINKAGE	EMBANKMENT	BALANCE WASTE (+) SHORTAGE(-)
	CU YD	CU YD	CU YD	CU YD
STA 15+75.00 TO STA 38+24.83 STA 146+62.50 TO STA 150+00.00	2,010	1,510	11,735	-10,225

CHANNEL EXCAVATION	
LOCATION	CU YD
STRUCTURE NO. 038-0219	1,930
TOTAL	1,930

TRENCH BACKFILL	
LOCATION	CU YD
STA 19+92.00, 54' RT TO 54' LT	77
STA 21+02.48, 53' RT TO 53' LT	72
STA 21+96.50, 47' LT TO 48' RT	39
TOTAL	188

TEMPORARY FENCE	
LOCATION	FOOT
STA 24+75 TO STA 34+50 LT	975
STA 25+20 TO STA 38+25 RT	1,350
TOTAL	2,325

PERMANENT SURVEY MARKERS, TYPE I	
LOCATION	EACH
STA 20+62.40	1
STA 30+73.60	1
TOTAL	2

SEEDING / FERTILIZING						
LOCATION	SEEDING CLASS 3	NITROGEN FERTILIZER NUTRIENT	PHOSPHORUS FERTILIZER NUTRIENT	POTASSIUM FERTILIZER NUTRIENT	HEAVY DUTY EROSION CONTROL BLANKET	TEMP EROSION CONTROL SEED
	ACRE	POUND	POUND	POUND	SQ YD	POUND
STA 15+50 TO STA 20+00 RT	0.51	46	46	46	2,468	153
STA 15+75 TO STA 20+13 LT	0.38	34	34	34	1,839	114
STA 20+50 TO STA 23+25 LT	0.23	21	21	21	1,113	69
STA 21+00 TO STA 23+25 RT	0.18	16	16	16	871	54
STA 26+64 TO STA 38+25 LT	1.12	101	101	101	5,421	336
STA 27+00 TO STA 38+25 RT	1.05	95	95	95	5,082	315
STA 146+00 TO STA 149+50 LT	0.3	27	27	27	1,452	90
STA 146+62 TO STA 149+50 RT	0.23	21	21	21	1,113	69
TOTAL	4	361	361	361	19,359	1,200

DRAINAGE			
LOCATION	PIPE CULVERT REM	PIPE CULVERTS, CLASS A, T-3 18"	PRECAST REINF CONC FLARED END SECTIONS 18"
	FOOT	FOOT	EACH
STA 19+92.27 LT & RT	92	108	2
STA 21+02.48 LT & RT	94	106	2
STA 22+16.17 LT & RT	80		
TOTAL	266	214	4

PAVING MATERIALS														
LOCATION	SUBBASE GRAN MATL T-A 12"	AGG BASE CSE T-A 10"	HMA BASE CSE 9"	HMA BASE CSE WIDENING 9"	AGG SURF CSE T-B	BIT MATLS PRM CT	LEVEL BIND MACH METH N50	HMA BIND CSE IL-19.0 FG N50	HMA SURF CSE MIX "C" N50	BRIDGE APPROACH PVMT CONNECTOR (FLEXIBLE)	AGGREGATE SHLDS T-B 6"	HMA SHLDS 6 1/2"	HMA SHLDS 9"	HMA SHLDS
	SQ YD	SQ YD	SQ YD	SQ YD	CU YD	POUND	TON	TON	TON	SQ YD	SQ YD	SQ YD	SQ YD	TON
STA 14+45.00 TO STA 15+75.00 LT				58		13								
STA 14+45.00 TO STA 18+45.90 RT				134		30								
STA 15+75.00 TO STA 17+40.00 RT						12								25
STA 15+75.00 TO STA 19+99.00 LT						84							375	
STA 15+75.00 TO STA 20+06.16 RT											242			
STA 15+75.00 TO STA 22+88.00 LT & RT						1269			237					
STA 16+68.00 TO STA 18+20.00 LT & RT						1139		160						
STA 17+40.00 TO STA 20+24.88 RT						22						97		
STA 18+20.00 TO STA 22+88.00 LT & RT	1,411					3,537		825						
STA 18+45.90 TO STA 22+47.50 LT & RT			335			75								
STA 20+79.70 TO STA 23+30.03 RT						59						262		
STA 20+87.00 TO STA 23+05.54 LT						52							230	
STA 22+47.50 TO STA 23+47.00 RT				29		7								
STA 22+82.00 TO STA 22+88.00 LT & RT						74				27.5				
STA 26+51.41 TO STA 38+24.83 LT						307							1,365	
STA 26+76.40 TO STA 38+24.83 RT						305						1,356		
STA 26+93.00 TO STA 37+14.00 RT				418		94								
STA 26+94.00 TO STA 27+00.00 LT & RT						74				27.5				
STA 26+94.00 TO STA 31+70.00 LT & RT	1,435					3599		840						
STA 26+94.00 TO STA 34+50.00 LT & RT						1487			331					
STA 31+70.00 TO STA 33+60.00 LT & RT						1426		200						
STA 34+50.00 TO STA 38+24.83 LT & RT						736	42		84					
STA 146+62.50 TO STA 149+87.24 LT & RT		871				2610		85	70		143			
COMMERCIAL ENTRANCE STA 20+22 LT		306			55	794		25	21					
TOTAL	2,846	1,177	335	639	55	17,805	42	2,135	743	55	385	1,715	1,970	25

Farnsworth GROUP, INC.
2709 McGraw Drive
Bloomington, Illinois 61704
309/663-8435, 309/663-1571 fax

DESIGNED - NAS/JJO	REVISED -		
DRAWN - JJO/DRR	REVISED -		
CHECKED - MSW	REVISED -		
DATE - 04/10/14	REVISED -		

STATE OF ILLINOIS
DEPARTMENT OF TRANSPORTATION

SCHEDULE OF QUANTITIES

SCALE: SHEET OF SHEETS STA. TO STA.

F.A.P RTE.	SECTION	COUNTY	TOTAL SHEETS	SHEET NO.
332	(3)BR	IROQUOIS	100	13

CONTRACT NO. 66736

ILLINOIS FED. AID PROJECT

24-8052

REMOVAL OF PAVING MATERIALS						
LOCATION	HMA SURF REM BUTT JT	PVMT REM	HMA SURF REM 2 1/4"	PAVED DITCH REM	PAVED SHLD REM	HMA SURF REM VARIABLE DEPTH
	SQ YD	SQ YD	SQ YD	FOOT	SQ YD	SQ YD
STA 15+75.00 TO STA 16+31.00 LT & RT	168					
STA 15+75.00 TO STA 23+40.00 LT & RT					510	
STA 18+20.00 TO STA 18+45.90 LT & RT		69				
STA 18+45.90 TO STA 21+20.00 LT & RT		731				
STA 19+20.00 TO STA 20+84.00 RT		160				
STA 21+07 TO STA 22+75 RT				167		
STA 21+21.50 TO STA 22+99.50 RT						138
STA 21+23.50 TO STA 22+76.25 LT						119
STA 21+70 TO STA 22+71 LT				103		
STA 26+82.25 TO STA 37+85.50 LT						858
STA 27+05.75 TO STA 37+96.00 RT						848
STA 29+60.00 TO STA 31+70.00 LT & RT		560				
STA 33+60.00 TO STA 34+50.00 LT & RT	240					
STA 34+50.00 TO STA 38+24.83 LT & RT			1,000			
TOTAL	408	1,520	1,000	270	510	1,963

GUARDRAIL				
LOCATION	SPBGR T-A 6 FT POSTS	TRAFFIC BARRIER TERMINAL T-6	TRAFFIC BARRIER TERMINAL T-1 SPL TANGENT	GUARDRAIL REM
	FOOT	EACH	EACH	FOOT
STA 21+21.50 TO STA 21+71.50 RT			1	
STA 21+23.50 TO STA 21+73.50 LT			1	
STA 21+71.50 TO STA 22+71.50 RT	100			
STA 21+73.50 TO STA 22+48.50 LT	75			
STA 21+84 TO STA 23+49 RT				165
STA 21+97 TO STA 23+33 LT				135
STA 22+48.50 TO STA 22+92.25 LT		1		
STA 22+71.50 TO STA 23+15.25 RT		1		
STA 26+66.75 TO STA 27+10.50 LT		1		
STA 26+78 TO STA 37+45 LT				1,120
STA 26+89.75 TO STA 27+33.50 RT		1		
STA 26+93 TO STA 37+92 RT				1,100
STA 27+10.50 TO STA 37+35.50 LT	1,025			
STA 27+33.50 TO STA 37+46.00 RT	1,012.5			
STA 37+35.50 TO STA 37+85.50 LT			1	
STA 37+46.00 TO STA 37+96.00 RT			1	
TOTAL	2,212.5	4	4	2,520

TEMPORARY PAVING MATERIALS			
LOCATION	TEMP RAMP	TEMP PVMT	TEMP PVMT REMOVAL
	SQ YD	SQ YD	SQ YD
STA 14+45.00 TO STA 21+20.00 RT			362
STA 19+20.00 TO STA 20+84.00 RT	160		
STA 29+60.00 TO STA 37+14.00 RT			251
STA 34+50.00 TO STA 34+57.50 LT & RT	20		
STA 38+17.33 TO STA 38+24.83 LT & RT	20		
STA 145+62.50 TO STA 149+87.24 LT		410	410
STA 145+52.50 TO STA 149+87.24 RT		438	438
COMMERCIAL ENTRANCE STA 20+22 LT			52
TOTAL	200	848	1,513

EROSION CONTROL			
LOCATION	TEMP DITCH CHECKS	PERIMETER EROSION BARRIER	INLET & PIPE PROTECTION
	FOOT	FOOT	EACH
STA 15+70 LT & RT		75	
STA 15+70 TO STA 19+50 LT & RT		762	
STA 16+50 LT & RT	20		
STA 18+00 LT & RT	20		
STA 19+50 LT & RT	20		
STA 19+50 TO STA 20+02.64 LT		60	
STA 19+50 TO STA 149+13 LT		72	
STA 19+92.27 60' LT			1
STA 20+51.86 TO STA 21+00 LT		54	
STA 21+00 TO STA 23+25 LT		227	
STA 21+02.48 58' LT			1
STA 21+25 LT & RT	20		
STA 21+50 TO STA 23+50 RT		202	
STA 22+00 LT & RT	20		
STA 22+75 LT & RT	20		
STA 24+75 TO STA 34+50 LT		975	
STA 25+20 TO STA 27+00 RT		188	
STA 26+75 LT	10		
STA 27+00 TO STA 38+25 RT		1,138	
STA 27+50 LT	10		
STA 29+00 LT	10		
STA 30+50 LT	10		
STA 32+00 LT	10		
STA 32+75 LT	10		
STA 33+50 LT	10		
STA 34+25 LT	10		
STA 34+50 TO STA 38+25 LT		370	
STA 38+25 LT & RT		30	
STA 145+70 TO STA 149+13 LT		339	
STA 146+00 LT	10		
STA 146+55 RT		18	
STA 146+55 TO STA 148+73.34 RT		219	
STA 147+50 LT	10		
STA 148+25 RT	10		
STA 148+73.34 TO STA 21+50 RT		56	
STA 149+00 LT & RT	20		
TOTAL	250	4,785	2

Farnsworth GROUP, INC.
2709 McGraw Drive
Bloomington, Illinois 61704
309/663-8435, 309/663-1571 fax

DESIGNED - NAS/JJO	REVISED -		
DRAWN - JJO/DRR	REVISED -		
CHECKED - MSW	REVISED -		
DATE - 04/10/14	REVISED -		

STATE OF ILLINOIS
DEPARTMENT OF TRANSPORTATION

SCHEDULE OF QUANTITIES

SCALE: SHEET OF SHEETS STA. TO STA.

F.A.P RTE.	SECTION	COUNTY	TOTAL SHEETS	SHEET NO.
332	(3)BR	IROQUOIS	100	14

CONTRACT NO. 66736

ILLINOIS FED. AID PROJECT

24-8052

PAVEMENT MARKING					
LOCATION	SHORT TERM PM	TEMP PM - LINE 4"	TEMP PM - LINE 6"	EPOXY PM - LINE 4"	EPOXY PM - LINE 6"
	FOOT	FOOT	FOOT	FOOT	FOOT
STA 13+00 TO STA 38+24.83 CL	512		640		640
STA 13+00 TO STA 38+24.83 LT		2,525		2,525	
STA 13+00 TO STA 20+00 RT		700		700	
STA 15+75 TO STA 19+75 LT	40				
STA 21+00 TO STA 38+24.83 LT	64				
STA 21+00 TO STA 38+24.83 RT	64	1725		1,725	
TOTAL	680	4,950	640	4,950	640

REFLECTORS / MARKERS				
LOCATION	RAISED REF PVMT MARKER	GUARDRAIL MARKER T-A	TERMINAL MARKER - DIRECT APPLIED	RAISED REF PVMT MARKER REM
	EACH	EACH	EACH	EACH
STA 15+75 TO STA 38+24.83	30			30
STA 21+21.50 RT			1	
STA 21+21.50 TO STA 23+15.25 RT		4		
STA 21+23.50 LT			1	
STA 21+23.50 TO STA 22+92.25 LT		4		
STA 26+66.75 LT			1	
STA 26+66.75 TO STA 37+85.50 LT		15		
STA 26+89.75 RT			1	
STA 26+89.75 TO STA 37+96.00 RT		15		
TOTAL	30	38	4	30

WORK ZONE PAVEMENT MARKING REMOVAL	
LOCATION	SQ FT
IL ROUTE 1, STAGE I	
STA 13+58 TO STA 18+20 LT & RT	154
STA 14+45 TO STA 18+20 RT	125
STA 31+70 TO STA 37+14 RT	181
STA 31+70 TO STA 37+23 LT & RT	184
IL ROUTE 1, STAGE II	
STA 12+14.69 RT	24
STA 13+06 TO STA 19+79 LT & RT	224
STA 14+45 TO STA 19+79 LT	178
STA 20+94 TO STA 36+78 LT & RT	528
STA 21+82 TO STA 35+72 LT	463
STA 37+32.50 LT	24
IL ROUTE 1, STAGE III	
STA 13+00 TO STA 38+25 CL	491
STA 13+00 TO STA 38+25 LT	842
STA 13+00 TO STA 20+00 RT	233
STA 15+75 TO STA 19+75 LT	13
STA 21+00 TO STA 38+25 LT	21
STA 21+00 TO STA 38+25 RT	596
T.R. 1950E, STAGE I	
STA 145+40 TO STA 149+65 LT & RT	142
STA 149+49 RT	20
T.R. 1950E, STAGE II	
STA 145+40 TO STA 149+68 LT & RT	143
STA 149+64 LT	20
TOTAL	4,606

TRAFFIC CONTROL BARRIERS		
LOCATION	TEMPORARY CONCRETE BARRIER	RELOCATE TEMPORARY CONCRETE BARRIER
	FOOT	FOOT
IL ROUTE 1, STAGE I		
STA 14+61 LT TO STA 15+49 RT	87.5	
STA 15+49 TO STA 19+79 RT	425	
STA 20+94 TO STA 34+74 RT	1387.5	
STA 34+74 RT TO STA 35+63 LT	87.5	
IL ROUTE 1, STAGE II		
STA 14+61 RT TO STA 15+49 LT		87.5
STA 15+49 LT TO STA 19+79 LT		425
STA 20+94 LT TO STA 34+74 LT		1387.5
STA 34+74 LT TO STA 35+63 RT		87.5
TOTAL	1,987.5	1,987.5

IMPACT ATTENUATORS		
LOCATION	IMPACT ATTENUATORS, TEMPORARY (NON-REDIRECTIVE), TEST LEVEL 3	IMPACT ATTENUATORS, RELOCATE (NON- REDIRECTIVE), TEST LEVEL 3
	EACH	EACH
IL ROUTE 1, STAGE I		
STA 14+61 LT	1	
STA 19+79 RT	1	
STA 20+94 RT	1	
STA 35+63 LT	1	
IL ROUTE 1, STAGE II		
STA 14+61 RT		1
STA 19+79 LT		1
STA 20+94 LT		1
STA 35+63 RT		1
TOTAL	4	4

Farnsworth GROUP, INC.
2709 McGraw Drive
Bloomington, Illinois 61704
309/663-8435, 309/663-1571 fax

DESIGNED - NAS/JJO	REVISED -		
DRAWN - JJO/DRR	REVISED -		
CHECKED - MSW	REVISED -		
DATE - 04/10/14	REVISED -		

STATE OF ILLINOIS
DEPARTMENT OF TRANSPORTATION

SCHEDULE OF QUANTITIES

SCALE: | SHEET OF SHEETS | STA. TO STA.

F.A.P RTE.	SECTION	COUNTY	TOTAL SHEETS	SHEET NO.
332	(3)BR	IROQUOIS	100	15

CONTRACT NO. 66736

ILLINOIS FED. AID PROJECT

24-8052

PROPOSED S.E. TRANSITION DATA	
FULL S.E.: (MATCH EX)	STA 15+75.00 TO STA 19+99.40
S.E. RUNOFF:	STA 19+99.40 TO STA 21+89.40
TAN RUNOUT:	STA 21+89.40 TO STA 22+29.40

PROP. CURVE RT1CL-1
PI STA. = 15+00.23
Δ = 16° 59′ 24″ (RT)
D = 1° 30′ 00″
R = 3,819.83′
T = 570.54′
L = 1,132.70′
E = 42.37′
e = 2.6%
T.R. = 40.0′
S.E. RUN = 190′
P.C. STA = 9+29.70
P.T. STA = 20+62.40

PROP. CURVE RT1CL-2
PI STA. = 36+83.01
Δ = 18° 07′ 45″ (LT)
D = 1° 30′ 00″
R = 3,819.83′
T = 609.42′
L = 1,208.65′
E = 48.31′
e = 2.6%
T.R. = 40′
S.E. RUN = 190′
P.C. STA = 30+73.60
P.T. STA = 42+82.25

PROPOSED S.E. TRANSITION DATA	
TAN RUNOUT:	STA 29+06.60 TO STA 29+46.60
S.E. RUNOFF:	STA 29+46.60 TO STA 31+36.60
FULL S.E.: (MATCH EX)	STA 31+36.60 TO STA 34+50.00

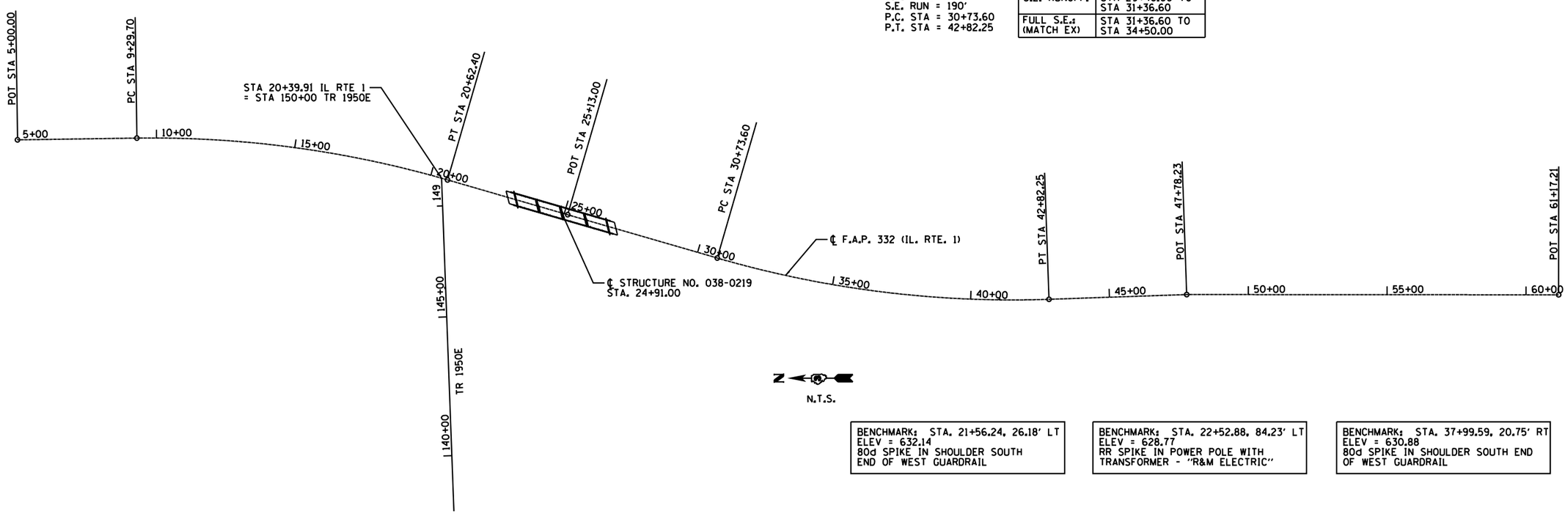

BENCHMARK: STA. 21+56.24, 26.18′ LT
ELEV = 632.14
80d SPIKE IN SHOULDER SOUTH
END OF WEST GUARDRAIL

BENCHMARK: STA. 22+52.88, 84.23′ LT
ELEV = 628.77
RR SPIKE IN POWER POLE WITH
TRANSFORMER - "R&M ELECTRIC"

BENCHMARK: STA. 37+99.59, 20.75′ RT
ELEV = 630.88
80d SPIKE IN SHOULDER SOUTH END
OF WEST GUARDRAIL

Farnsworth GROUP, INC.
2709 McGraw Drive
Bloomington, Illinois 61704
309/663-8435, 309/663-1571 fax

DESIGNED - NAS/JJO	REVISED -		
DRAWN - JJO/DRR	REVISED -		
CHECKED - MSW	REVISED -		
DATE - 04/10/14	REVISED -		

STATE OF ILLINOIS
DEPARTMENT OF TRANSPORTATION

ALIGNMENT AND BENCHMARKS

SCALE: | SHEET OF SHEETS | STA. TO STA.

F.A.P RTE.	SECTION	COUNTY	TOTAL SHEETS	SHEET NO.
332	(3)BR	IROQUOIS	100	16

CONTRACT NO. 66736

ILLINOIS FED. AID PROJECT

24-8052

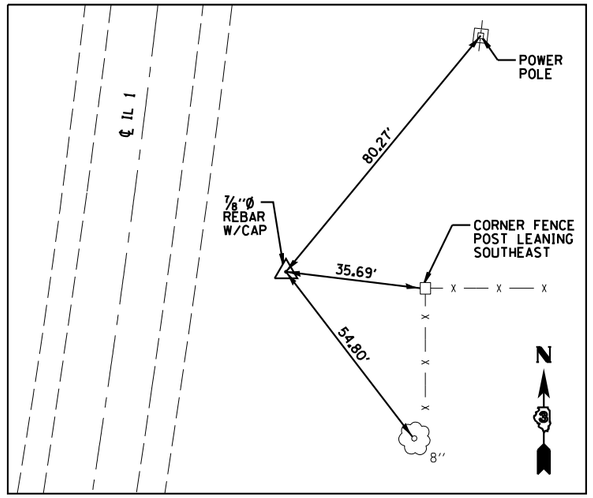

IL 1
P.I. CURVE #1
STA. 15+00.23, 42.37' RT
N=1504464.966
E=1147467.567

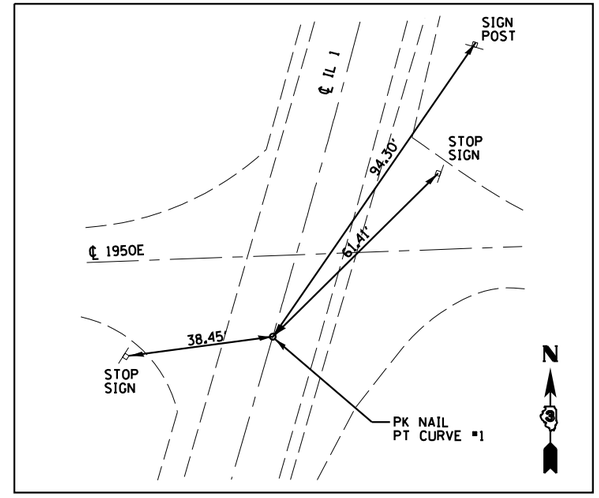

IL 1
P.T. CURVE #1
STA. 20+62.40, 0.00' LT
N=1503916.963
E=1147308.807

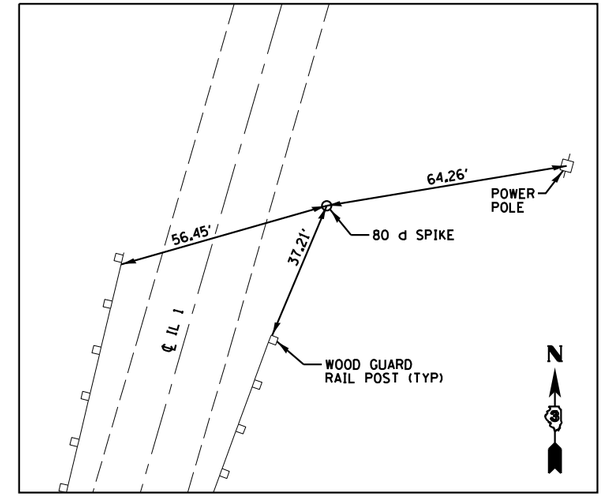

IL 1
BENCHMARK
STA. 21+56.24, 26.18' LT
N=1503819.523
E=1147307.860

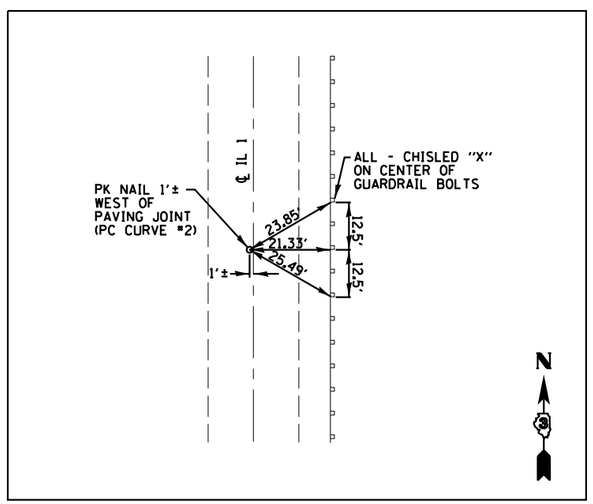

IL 1
P.C. CURVE #2
STA. 30+73.60, 1'± LT
N=1502945.702
E=1147027.426

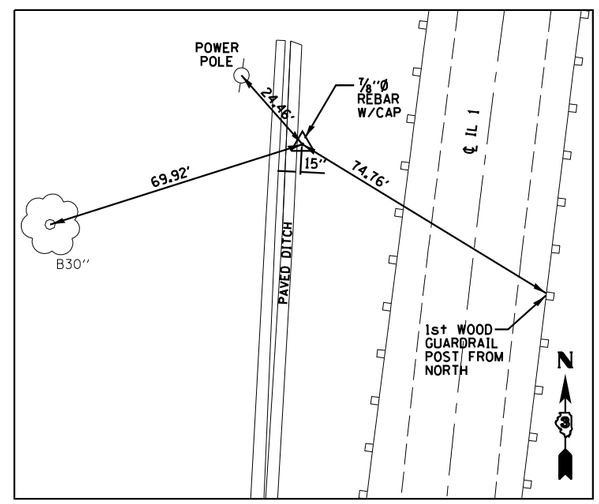

IL 1
P.I. CURVE #2
STA. 36+83.01, 48.31' LT
N=1502360.352
E=1146857.846

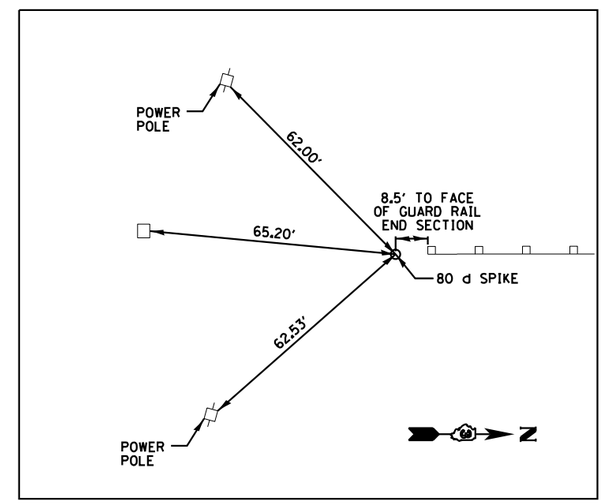

IL 1
BENCHMARK
STA. 37+99.59, 20.75' RT
N=1502235.331
E=1146872.031

Farnsworth GROUP, INC.
2709 McGraw Drive
Bloomington, Illinois 61704
309/663-8435, 309/663-1571 fax

DESIGNED - NAS/JJO	REVISED -		
DRAWN - JJO/DRR	REVISED -		
CHECKED - MSW	REVISED -		
DATE - 04/10/14	REVISED -		

STATE OF ILLINOIS
DEPARTMENT OF TRANSPORTATION

SURVEY TIES

SCALE: | SHEET OF SHEETS | STA. TO STA.

F.A.P RTE.	SECTION	COUNTY	TOTAL SHEETS	SHEET NO.
332	(3)BR	IROQUOIS	100	17

CONTRACT NO. 66736

ILLINOIS FED. AID PROJECT

24-8052

SEE EROSION CONTROL PLANS FOR WETLAND AREAS

LAWRENCE S. McCULLOUGH, INC.

+26.00
60.00' LT

+86.00
45.00' LT

13+25

EX ROW

CONSTRUCTION LIMITS

IMPROVEMENT BEGINS
STA 15+75.00

AGG
ASPH

12 13 14 15+00 16

12' EX
12' EX

12'
12'

F.A.P. 332
IL. RTE. 1

HMA SURFACE REMOVAL - BUTT JOINT
STA 15+75 TO STA 16+35

MATCH LINE 17+00

+00.00
60.00' RT

+00.00
75.00' RT

CORA MALLON

HMA SURFACE REMOVAL - BUTT JOINT

PAVEMENT REMOVAL

NOTE:
ALL EXISTING SIGNS SHALL BE LOGGED IN AND RE-ERECTED IN SUITABLE LOCATIONS AS DETERMINED BY THE ENGINEER.

20 0 20
SCALE IN FEET

SEC 29 T27N R12W

PLAN		BY	DATE
NOTE BOOK NO. ____	SURVEYED		
	PLOTTED		
	ALIGNMENT CHECKED		
	RT. OF WAY CHECKED		
	CADD FILE NAME		

PROFILE		BY	DATE
NOTE BOOK NO. ____	SURVEYED		
	PLOTTED		
	GRADES CHECKED		
	B.M. NOTED		
	STRUCTURE NOTAT'NS CH'KD		

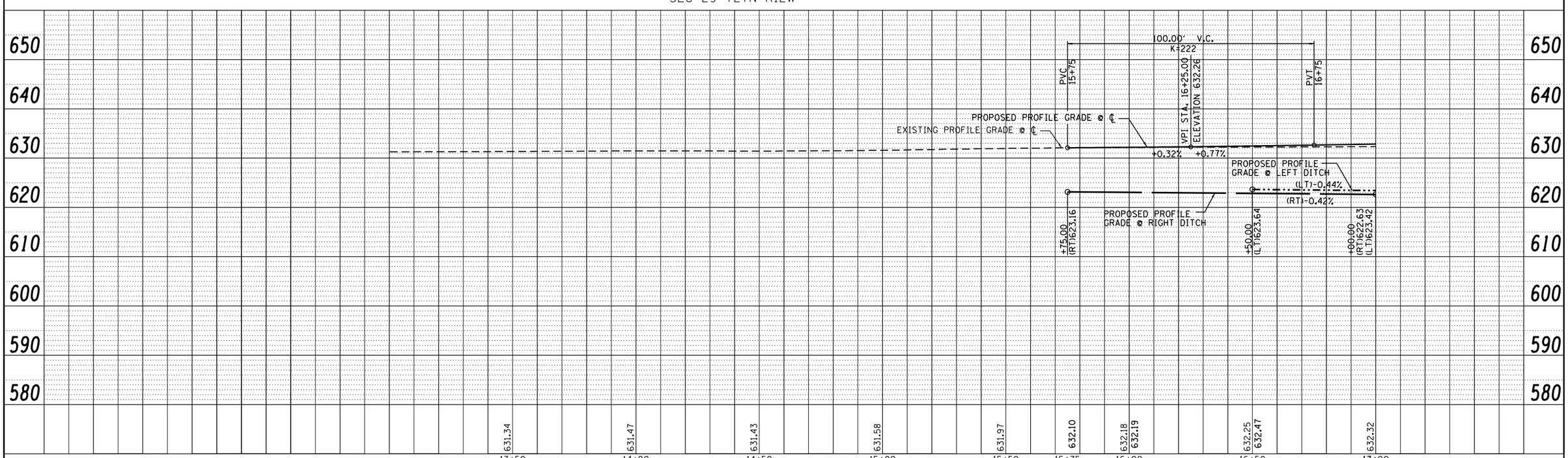

Farnsworth GROUP, INC.
2709 McGraw Drive
Bloomington, Illinois 61704
309/663-8435, 309/663-1571 fax

DESIGNED - JJO	REVISED -		
DRAWN - JJO	REVISED -		
CHECKED - MSW	REVISED -		
DATE - 04/10/14	REVISED -		

STATE OF ILLINOIS
DEPARTMENT OF TRANSPORTATION

IL ROUTE 1
PLAN & PROFILE

SCALE: | SHEET NO. OF SHEETS | STA. 13+50 TO STA. 17+00

F.A.P. RTE.	SECTION	COUNTY	TOTAL SHEETS	SHEET NO.
332	(3)BR	IROQUOIS	100	18

CONTRACT NO. 66736

ILLINOIS FED. AID PROJECT

24-8052

SEE EROSION CONTROL PLANS FOR WETLAND AREAS

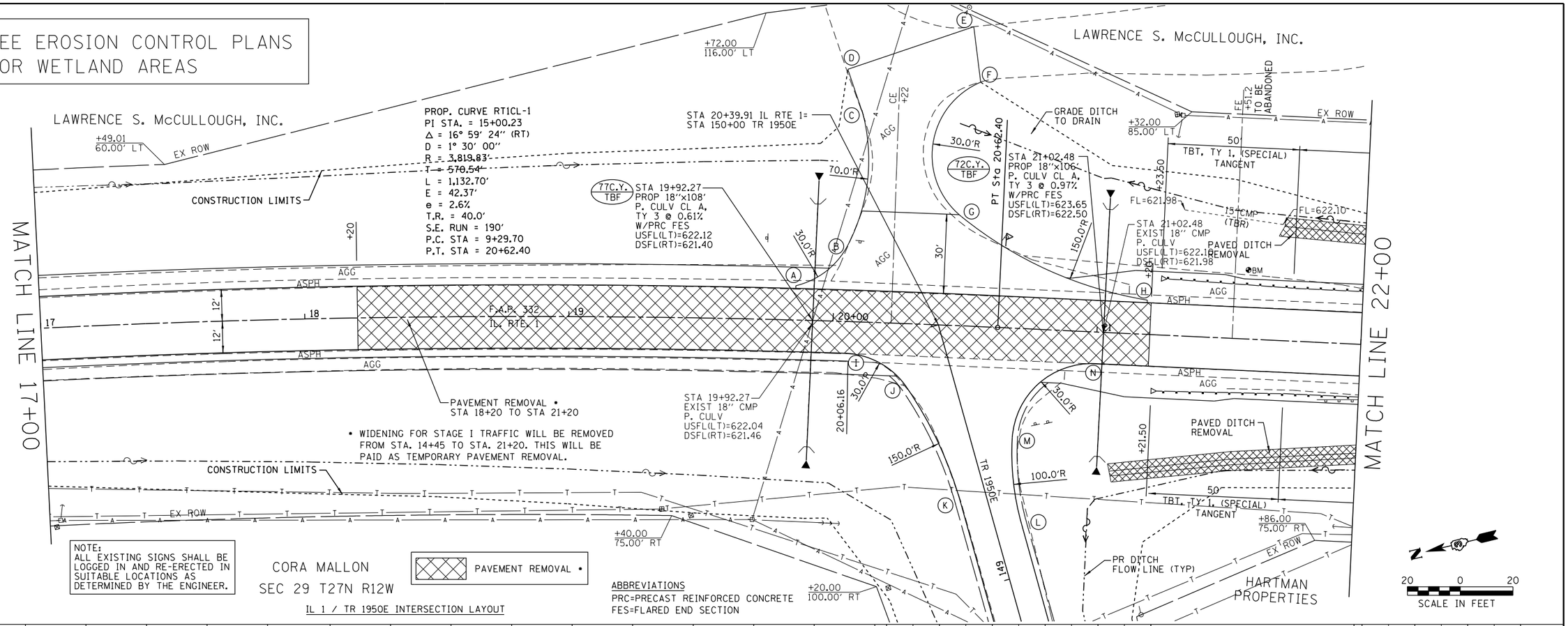

NOTE:
ALL EXISTING SIGNS SHALL BE LOGGED IN AND RE-ERECTED IN SUITABLE LOCATIONS AS DETERMINED BY THE ENGINEER.

CORA MALLON
SEC 29 T27N R12W

PAVEMENT REMOVAL •

IL 1 / TR 1950E INTERSECTION LAYOUT

ABBREVIATIONS
PRC=PRECAST REINFORCED CONCRETE
FES=FLARED END SECTION

POINT	A	B	C	D	E	F	G	H	I	J	K	L	M	N
STA (IL 1)	19+85.58	20+04.69	20+08.34	20+02.64	20+48.45	20+51.86	20+46.70	21+18.25	20+04.53					20+98.27
STA (TR 1950E)										149+80.24	149+32.37	149+18.75	149+51.26	
OFFSET	13' LT	28.89' LT	80.21' LT	95.48' LT	113.40' LT	92.52' LT	41.28' LT	13.41' LT	12' RT	17.84' LT	10' LT	10' RT	15.43' RT	12' RT

BENCHMARK: STA. 21+56.24, 26.18' LT
ELEV = 632.14
80d SPIKE IN SHOULDER SOUTH END OF WEST GUARDRAIL

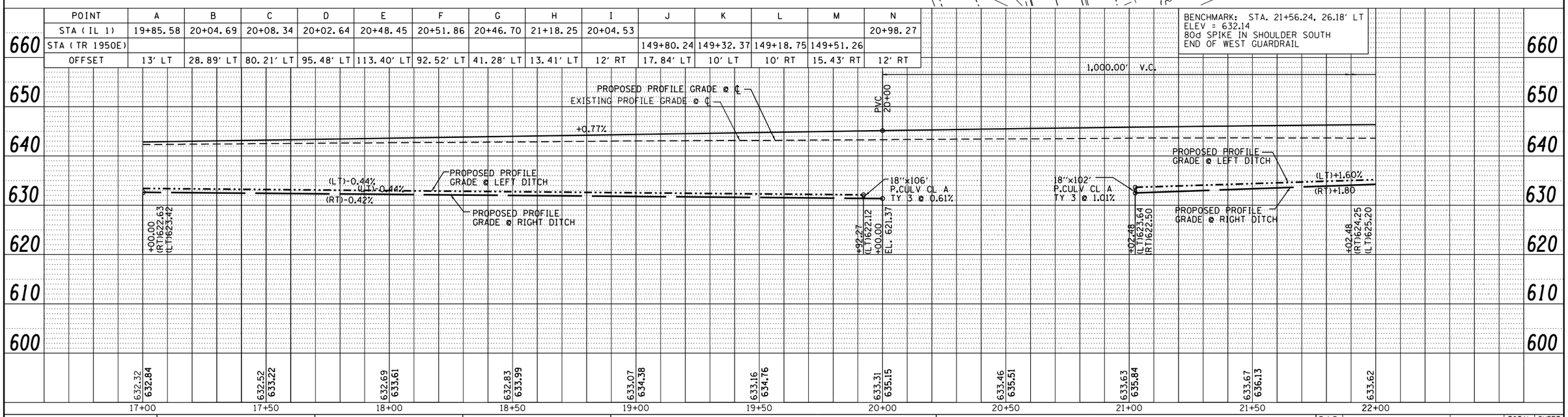

DESIGNED - JJO	REVISED -		
DRAWN - JJO	REVISED -		
CHECKED - MSW	REVISED -		
DATE - 04/10/14	REVISED -		

Farnsworth GROUP, INC.
2709 McGraw Drive
Bloomington, Illinois 61704
309/663-8435, 309/663-1571 fax

STATE OF ILLINOIS
DEPARTMENT OF TRANSPORTATION

IL ROUTE 1
PLAN & PROFILE

SCALE: | SHEET NO. OF SHEETS | STA. 17+00 TO STA. 22+00

F.A.P. RTE.	SECTION	COUNTY	TOTAL SHEETS	SHEET NO.
332	(3)BR	IROQUOIS	100	19

CONTRACT NO. 66736
ILLINOIS FED. AID PROJECT

24-8052

PLAN: SURVEYED / PLOTTED / ALIGNMENT CHECKED / RT. OF WAY CHECKED / CADD FILE NAME / NOTE BOOK NO. / BY / DATE

PROFILE: SURVEYED / PLOTTED / GRADES CHECKED / B.M. NOTED / STRUCTURE NOTAT'NS CHK'D / NOTE BOOK NO. / BY / DATE

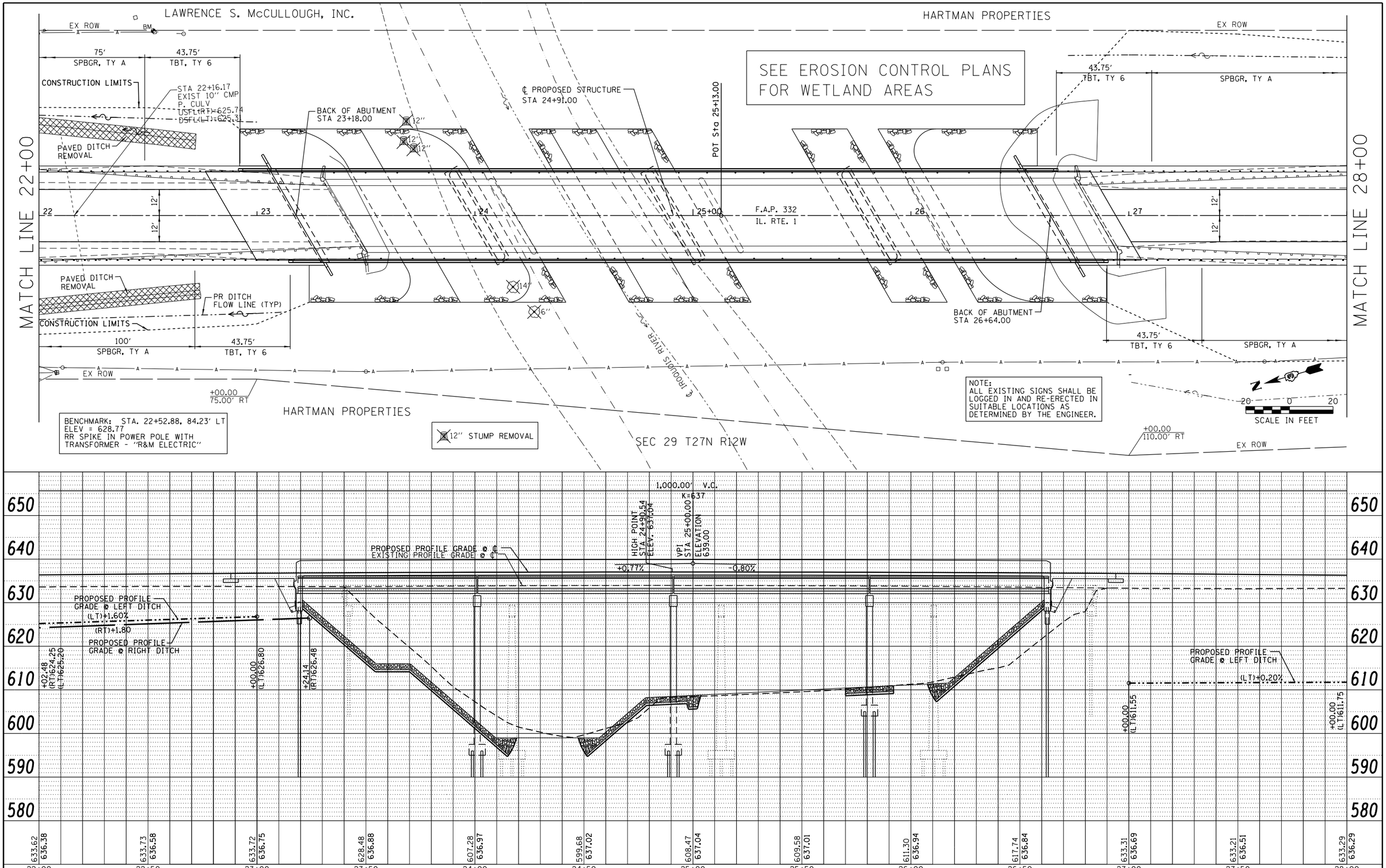

Farnsworth GROUP, INC.
2709 McGraw Drive
Bloomington, Illinois 61704
309/663-8435, 309/663-1571 fax

DESIGNED - JJO	REVISED -		
DRAWN - JJO	REVISED -		
CHECKED - MSW	REVISED -		
DATE - 04/10/14	REVISED -		

STATE OF ILLINOIS
DEPARTMENT OF TRANSPORTATION

IL ROUTE 1
PLAN & PROFILE

SCALE: | SHEET NO. OF SHEETS | STA. 22+00 TO STA. 28+00

F.A.P. RTE.	SECTION	COUNTY	TOTAL SHEETS	SHEET NO.
332	(3)BR	IROQUOIS	100	20

CONTRACT NO. 66736

ILLINOIS FED. AID PROJECT

24-8052

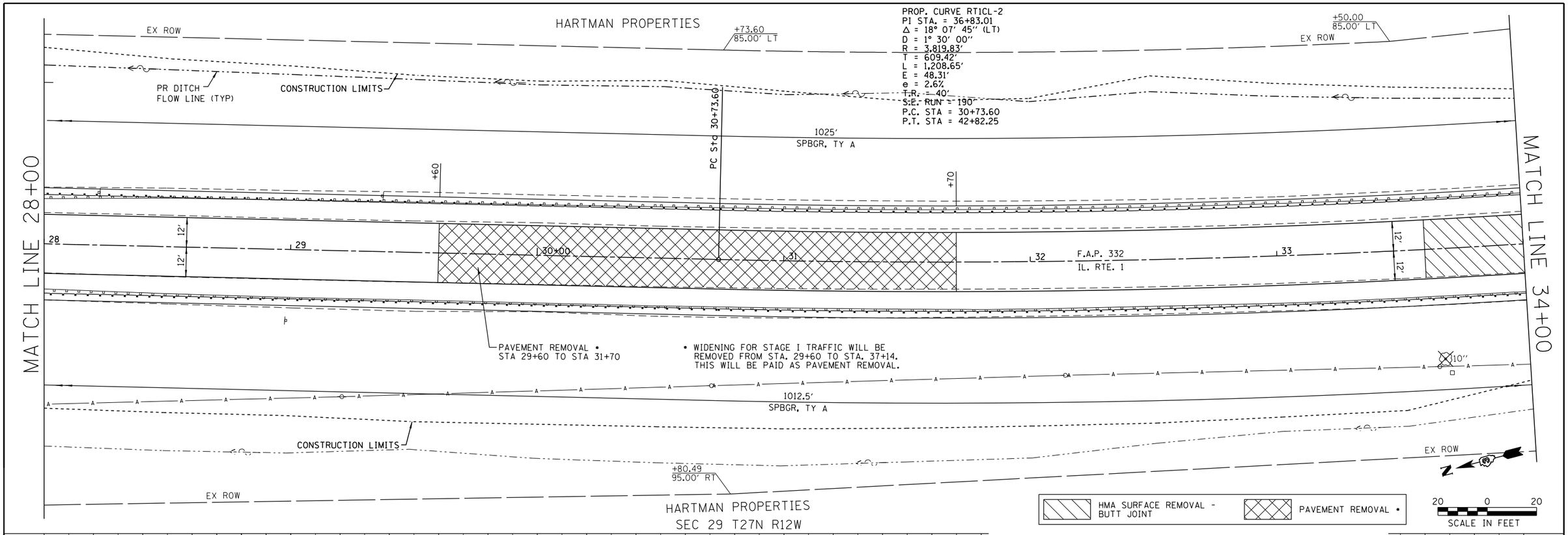

PLAN
SURVEYED
PLOTTED
ALIGNMENT CHECKED
RT. OF WAY CHECKED
CADD FILE NAME
NOTE BOOK
NO.
BY
DATE

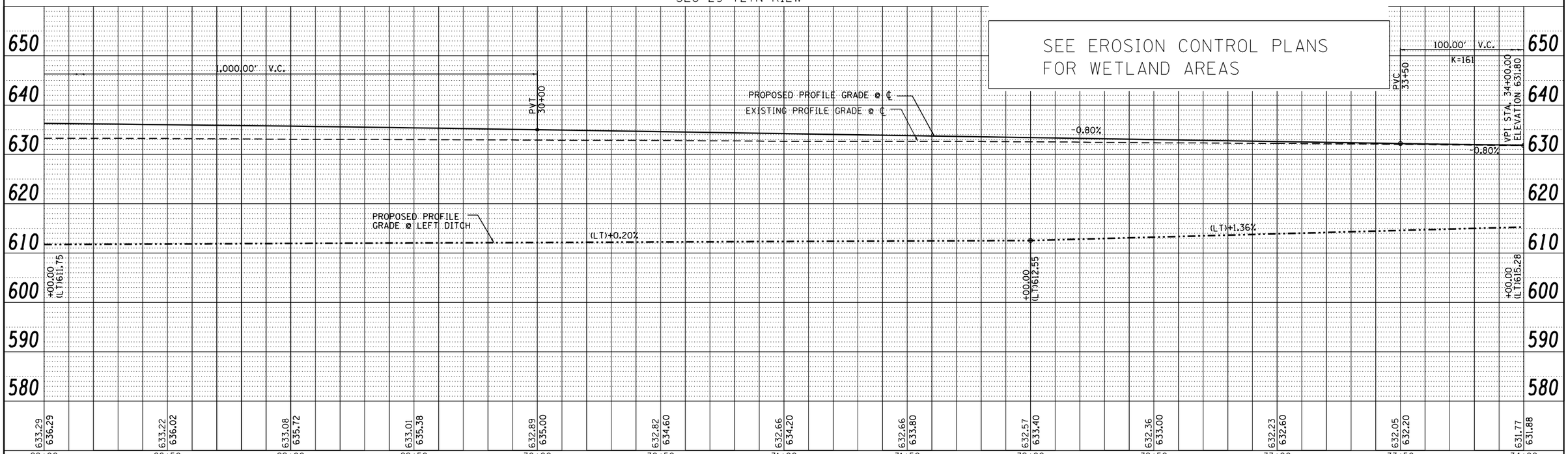

SEE EROSION CONTROL PLANS
FOR WETLAND AREAS

PROFILE
SURVEYED
PLOTTED
GRADES CHECKED
BM. NOTED
STRUCTURE NOTATNS CHKD
NOTE BOOK
NO.
BY
DATE

Farnsworth
GROUP, INC.
2709 McGraw Drive
Bloomington, Illinois 61704
309/663-8435, 309/663-1571 fax

DESIGNED - JJO	REVISED -		
DRAWN - JJO	REVISED -		
CHECKED - MSW	REVISED -		
DATE - 04/10/14	REVISED -		

STATE OF ILLINOIS
DEPARTMENT OF TRANSPORTATION

IL ROUTE 1
PLAN & PROFILE

SCALE: | SHEET NO. OF SHEETS | STA. 28+00 TO STA. 34+00

F.A.P. RTE.	SECTION	COUNTY	TOTAL SHEETS	SHEET NO.
332	(3)BR	IROQUOIS	100	21

CONTRACT NO. 66736

ILLINOIS FED. AID PROJECT

24-8052

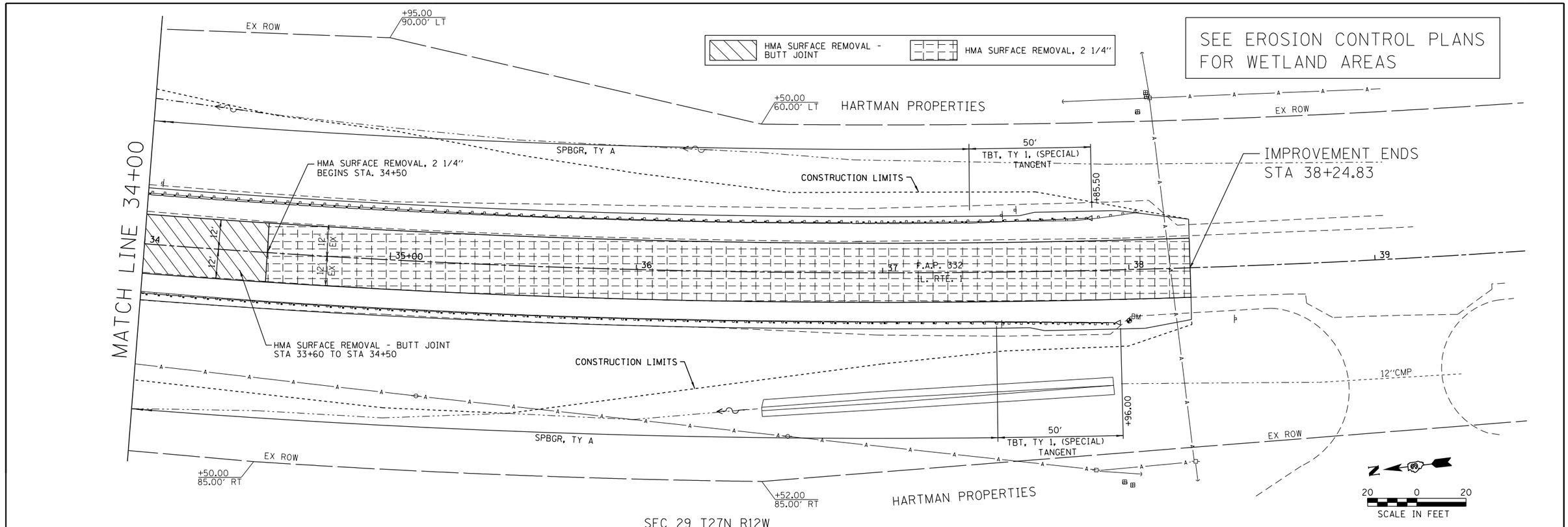

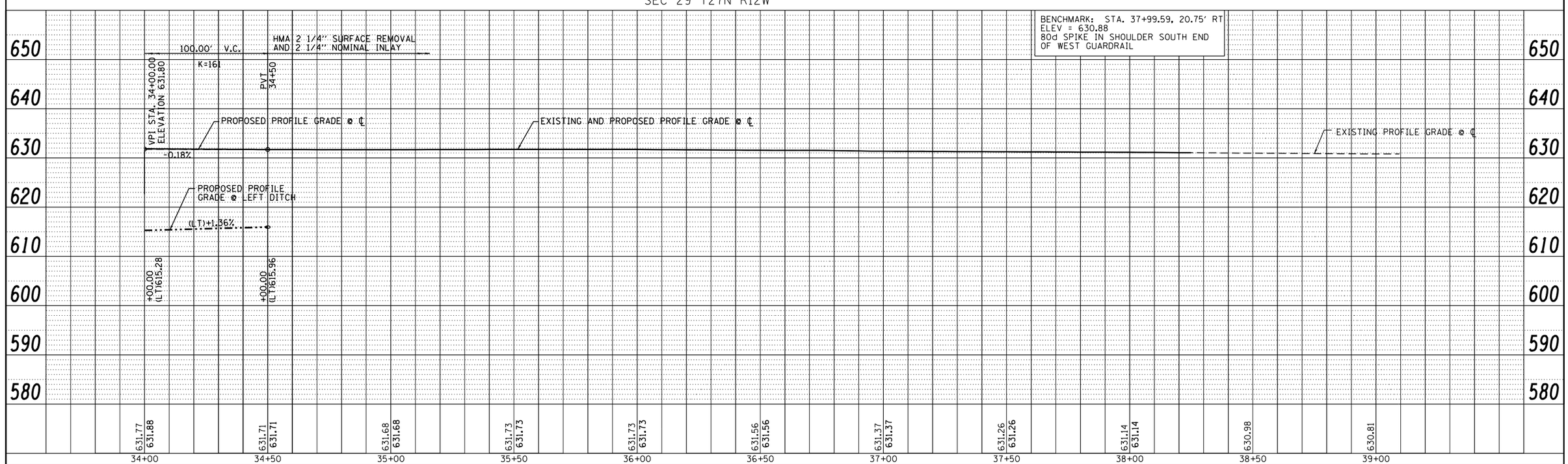

PLAN		BY	DATE
SURVEYED			
PLOTTED			
ALIGNMENT CHECKED			
RT. OF WAY CHECKED			
CADD FILE NAME			
NOTE BOOK NO.			

PROFILE		BY	DATE
SURVEYED			
PLOTTED			
GRADES CHECKED			
B.M. NOTED			
STRUCTURE NOTATNS CHKD			
NOTE BOOK NO.			

Farnsworth GROUP, INC.
2709 McGraw Drive
Bloomington, Illinois 61704
309/663-8435, 309/663-1571 fax

DESIGNED - JJO	REVISED -	
DRAWN - JJO	REVISED -	
CHECKED - MSW	REVISED -	
DATE - 04/10/14	REVISED -	

STATE OF ILLINOIS
DEPARTMENT OF TRANSPORTATION

IL ROUTE 1
PLAN & PROFILE

SCALE: | SHEET NO. OF SHEETS | STA. 34+00 TO STA. 39+00

F.A.P. RTE.	SECTION	COUNTY	TOTAL SHEETS	SHEET NO.
332	(3)BR	IROQUOIS	100	22

CONTRACT NO. 66736

ILLINOIS FED. AID PROJECT

24-8052

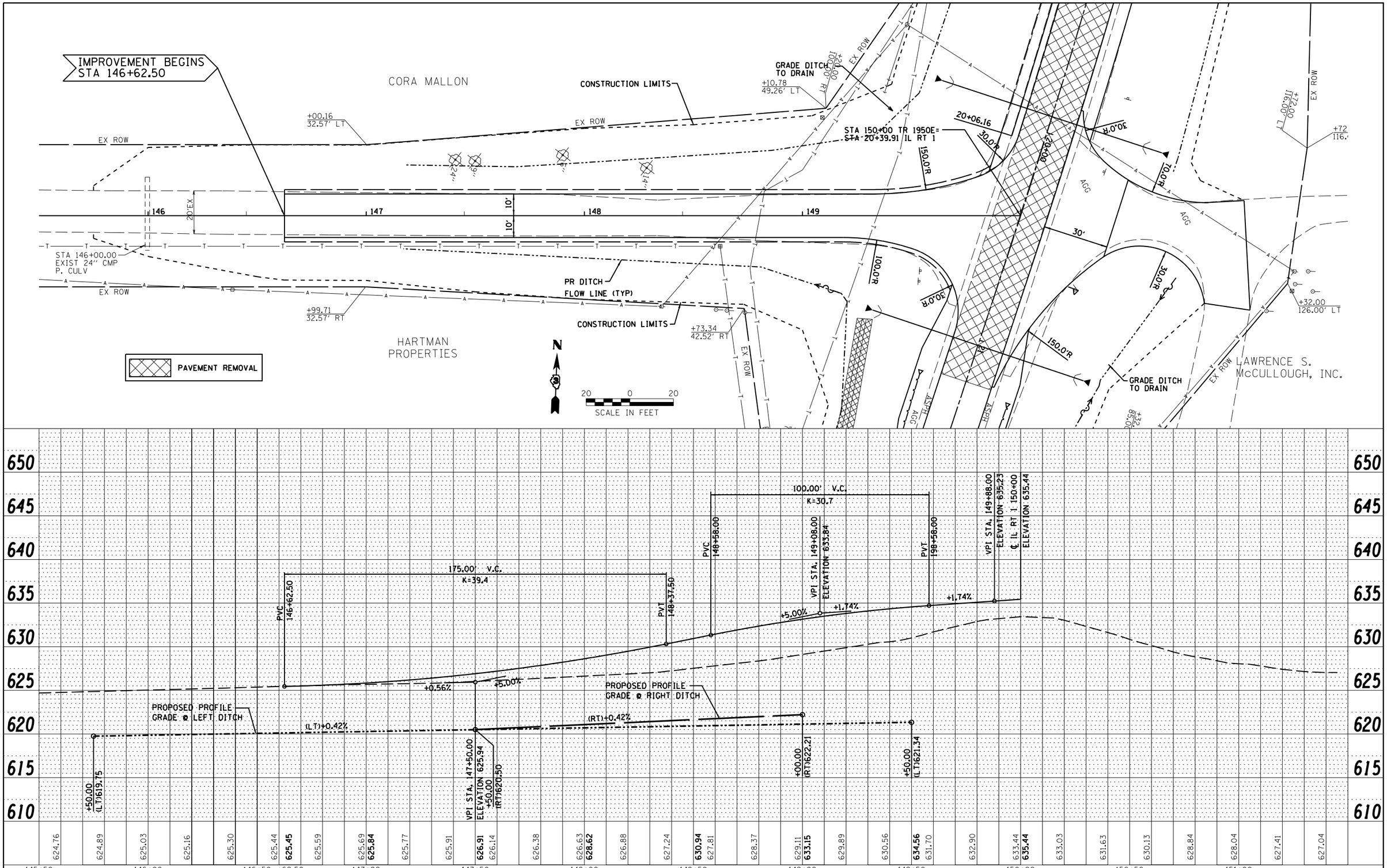

PLAN	BY	DATE
SURVEYED		
PLOTTED		
ALIGNMENT CHECKED		
RT. OF WAY CHECKED		
CADD FILE NAME		
NOTE BOOK NO.		

PROFILE	BY	DATE
SURVEYED		
PLOTTED		
GRADES CHECKED		
BM. NOTED		
STRUCTURE NOTATNS CHKD		
NOTE BOOK NO.		

Farnsworth GROUP, INC.
2709 McGraw Drive
Bloomington, Illinois 61704
309/663-8435, 309/663-1571 fax

DESIGNED - JJO	REVISED -		
DRAWN - JJO	REVISED -		
CHECKED - MSW	REVISED -		
DATE - 04/10/14	REVISED -		

STATE OF ILLINOIS
DEPARTMENT OF TRANSPORTATION

TR 1950E
PLAN & PROFILE

SCALE: SHEET NO. OF SHEETS STA. 145+50 TO STA. 151+50

F.A.P. RTE.	SECTION	COUNTY	TOTAL SHEETS	SHEET NO.
332	(3)BR	IROQUOIS	100	23

CONTRACT NO. 66736

ILLINOIS FED. AID PROJECT

24-8052

PRE-STAGE

1. PERFORM PIPE CULVERT REMOVAL AND REPLACEMENT AT STA 19+90.90 AND STA 21+02.50 UNDER TRAFFIC CONTROL AND PROTECTION STANDARD 701201 ONE LANE AT A TIME. COMPLETELY BACK FILL PIPE CULVERT TRENCHES AND PATCH WITH CLASS D PATCHES, TYPE III, 14 INCHES AT THE END OF WORK DAY AND OPEN TRAFFIC TO BOTH LANES.

2. PERFORM BASE COURSE WIDENING ON THE RIGHT SIDE OF IL RTE 1 FROM STA 14+45 TO STA 37+14 AND TEMPORARY WIDENING ON THE SOUTH SIDE OF TR 1950E STAGE I UNDER TRAFFIC CONTROL AND PROTECTION STANDARD 701326 PRIOR TO STAGE I MAINLINE.

STAGE I, IA, IB & IC

1. INSTALL TEMPORARY SIGNALS AND TEMPORARY CONCRETE BARRIER IN ACCORDANCE WITH TRAFFIC CONTROL AND PROTECTION STANDARD 701321. LEAVE A GAP IN TEMPORARY CONCRETE BARRIER FOR THE COMMERCIAL ENTRANCE AT LT STA 20+39 AS NOTED, AND DIVERT TRAFFIC TO THE WEST SIDE.

2. COMPLETE WORK UNDER STAGE IA INCLUDING WIDENING THE COMMERCIAL ENTRANCE AT LT STA 20+39 TO THE NORTH WHILE MAINTAINING TRAFFIC TO THE ENTRANCE ON THE SOUTH HALF OF THE ENTRANCE.

3. AFTER THE STAGE I WORK ON THE BRIDGE IS COMPLETED AND ALL STAGE IA ROAD WORK BETWEEN THE BRIDGE IS COMPLETED, CONSTRUCT THE STAGE IB PORTION OF THE COMMERCIAL ENTRANCE AND STAGE IB ROADWAY TO CONNECT TO THE BRIDGE. COMPLETE THE REMAINING STAGE IB WORK AND PREPARE FOR STAGE II WORK.

4. COMMERCIAL ENTRANCE TRAFFIC DIVERTED ACROSS BRIDGE DURING STAGE IC WILL BE GUIDED AROUND EAST END OF THE IMPACT ATTENTUATOR LOCATED AT LT STA 35+63 USING FLAGMEN.

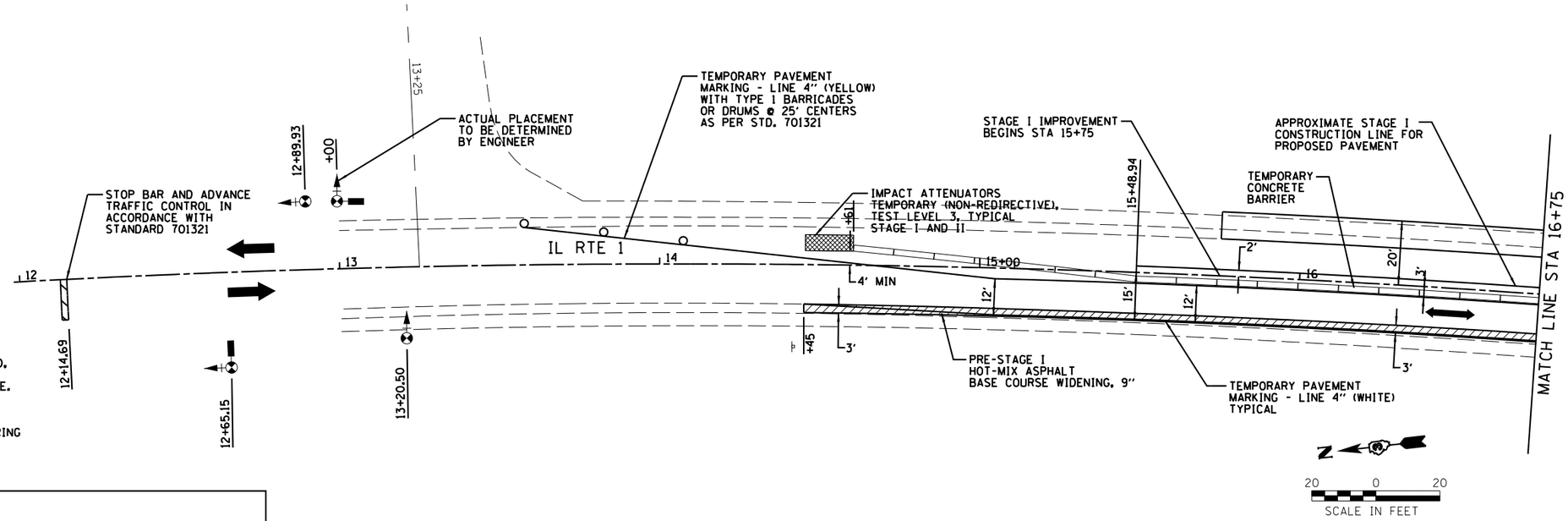

LEGEND

TEMPORARY CONCRETE BARRIER	IMPACT ATTENUATORS
TRAFFIC SIGNAL WITH SIGNAL DIRECTION INDICATOR AND BACK PLATE	DRUM WITH STEADY BURNING LIGHT
BARRICADE TYPE III	PAVEMENT REMOVAL
MAINLINE TRAFFIC	HMA BASE COURSE WIDENING, 9"
TC-26 MICROWAVE DETECTOR	HMA BASE COURSE, 9"
	AGGREGATE BASE COURSE, TYPE A, 10"

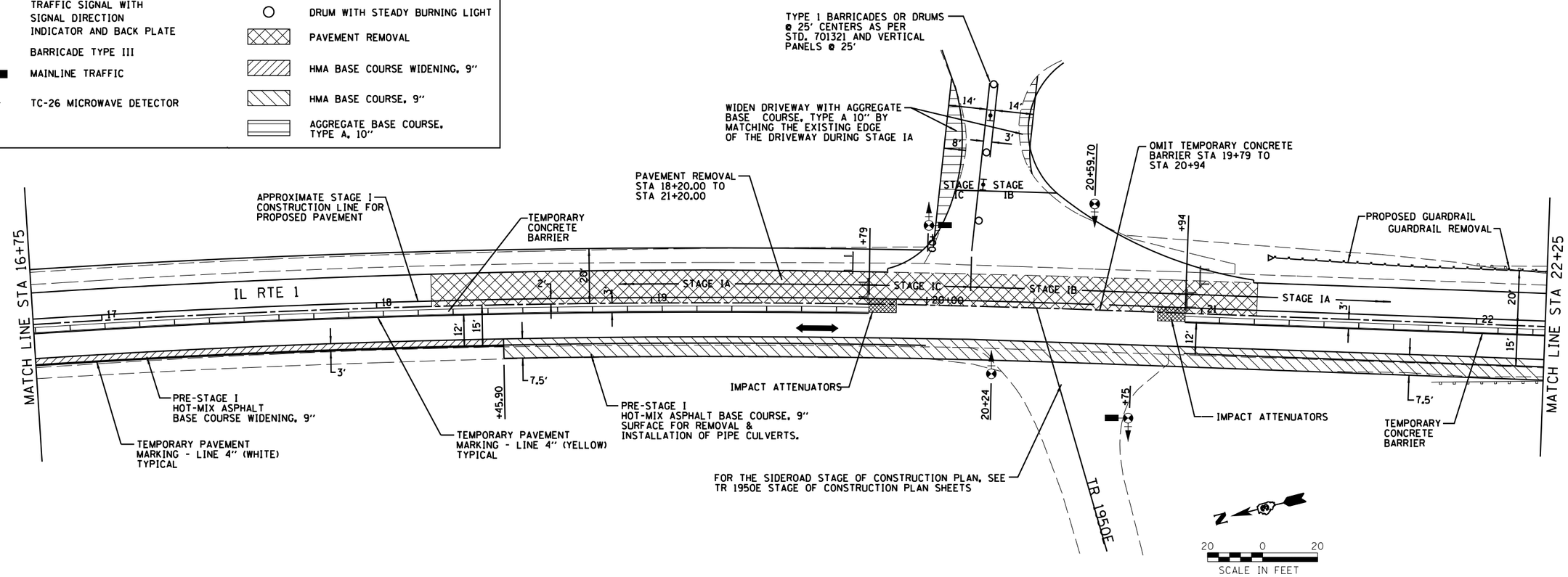

Farnsworth GROUP, INC.
2709 McGraw Drive
Bloomington, Illinois 61704
309/663-8435, 309/663-1571 fax

DESIGNED - NAS/JJO	REVISED -	STATE OF ILLINOIS DEPARTMENT OF TRANSPORTATION	IL ROUTE 1 STAGE OF CONSTRUCTION – STAGE I
DRAWN - JJO/DRR	REVISED -		
CHECKED - MSW	REVISED -		
DATE - 04/10/14	REVISED -		SCALE: SHEET OF SHEETS STA. TO STA.

F.A.P RTE.	SECTION	COUNTY	TOTAL SHEETS	SHEET NO.
332	(3)BR	IROQUOIS	100	24
		CONTRACT NO. 66736		
	ILLINOIS FED. AID PROJECT			

24-8052

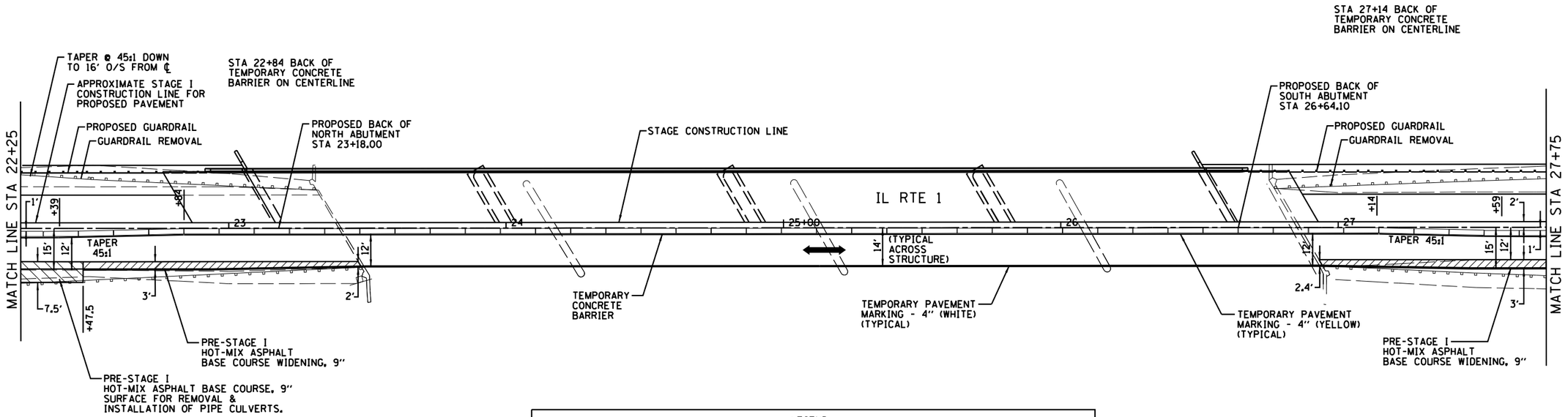

LEGEND

- TEMPORARY CONCRETE BARRIER
- TRAFFIC SIGNAL WITH SIGNAL DIRECTION INDICATOR AND BACK PLATE
- BARRICADE TYPE III
- MAINLINE TRAFFIC
- HMA BASE COURSE WIDENING, 9"
- TC-26 MICROWAVE DETECTOR
- IMPACT ATTENUATORS
- DRUM WITH STEADY BURNING LIGHT
- PAVEMENT REMOVAL
- HMA BASE COURSE, 9"

N

20 0 20
SCALE IN FEET

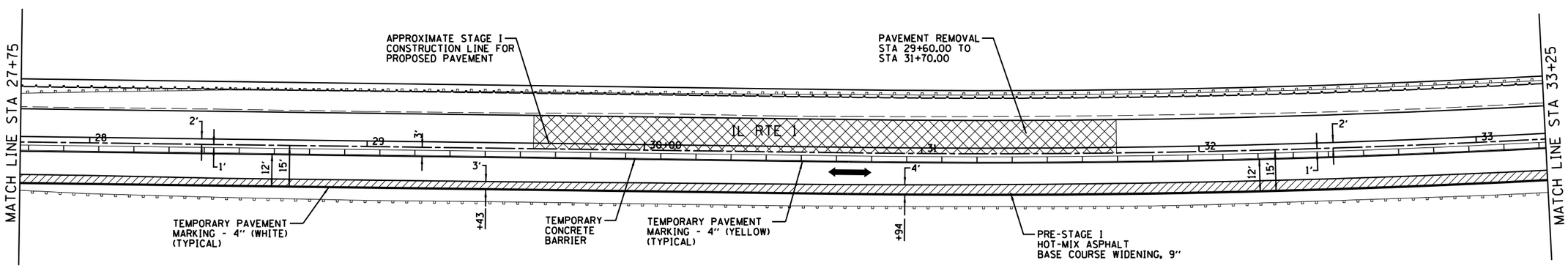

N

20 0 20
SCALE IN FEET

PRE-STAGE

1. PERFORM PIPE CULVERT REMOVAL AND REPLACEMENT AT STA 19+90.90 AND STA 21+02.50 UNDER TRAFFIC CONTROL AND PROTECTION STANDARD 701201 ONE LANE AT A TIME. COMPLETELY BACK FILL PIPE CULVERT TRENCHES AT THE END OF WORK DAY AND OPEN TRAFFIC TO BOTH LANES.
2. PERFORM BASE COURSE WIDENING ON THE RIGHT SIDE OF IL RTE 1 FROM STA 14+45 TO STA 37+14 AND TEMPORARY WIDENING ON THE SOUTH SIDE OF TR 1950E STAGE I UNDER TRAFFIC CONTROL AND PROTECTION STANDARD 701326 PRIOR TO STAGE I MAINLINE.

STAGE I, IA, IB & IC

1. INSTALL TEMPORARY SIGNALS AND TEMPORARY CONCRETE BARRIER IN ACCORDANCE WITH TRAFFIC CONTROL AND PROTECTION STANDARD 701321. LEAVE A GAP IN TEMPORARY CONCRETE BARRIER FOR THE COMMERCIAL ENTRANCE AT LT STA 20+39 AS NOTED, AND DIVERT TRAFFIC TO THE WEST SIDE.
2. COMPLETE WORK UNDER STAGE IA INCLUDING WIDENING THE COMMERCIAL ENTRANCE AT LT STA 20+39 TO THE NORTH WHILE MAINTAINING TRAFFIC TO THE ENTRANCE ON THE SOUTH HALF OF THE ENTRANCE.
3. AFTER THE STAGE I WORK ON THE BRIDGE IS COMPLETED AND ALL STAGE IA ROAD WORK BETWEEN THE BRIDGE IS COMPLETED. CONSTRUCT THE STAGE IB PORTION OF THE COMMERCIAL ENTRANCE AND STAGE IB ROADWAY TO CONNECT TO THE BRIDGE. COMPLETE THE REMAINING STAGE IB WORK AND PREPARE FOR STAGE II WORK.
4. COMMERCIAL ENTRANCE TRAFFIC DIVERTED ACROSS BRIDGE DURING STAGE IC WILL BE GUIDED AROUND EAST END OF THE IMPACT ATTENTUATOR LOCATED AT LT STA 35+63 USING FLAGMEN.

N

20 0 20
SCALE IN FEET

Farnsworth GROUP, INC.
2709 McGraw Drive
Bloomington, Illinois 61704
309/663-8435, 309/663-1571 fax

DESIGNED - NAS/JJO	REVISED -		
DRAWN - JJO/DRR	REVISED -		
CHECKED - MSW	REVISED -		
DATE - 04/10/14	REVISED -		

STATE OF ILLINOIS
DEPARTMENT OF TRANSPORTATION

IL ROUTE 1
STAGE OF CONSTRUCTION – STAGE I

SCALE: SHEET OF SHEETS STA. TO STA.

F.A.P RTE.	SECTION	COUNTY	TOTAL SHEETS	SHEET NO.
332	(3)BR	IROQUOIS	100	25

CONTRACT NO. 66736

ILLINOIS FED. AID PROJECT

24-8052

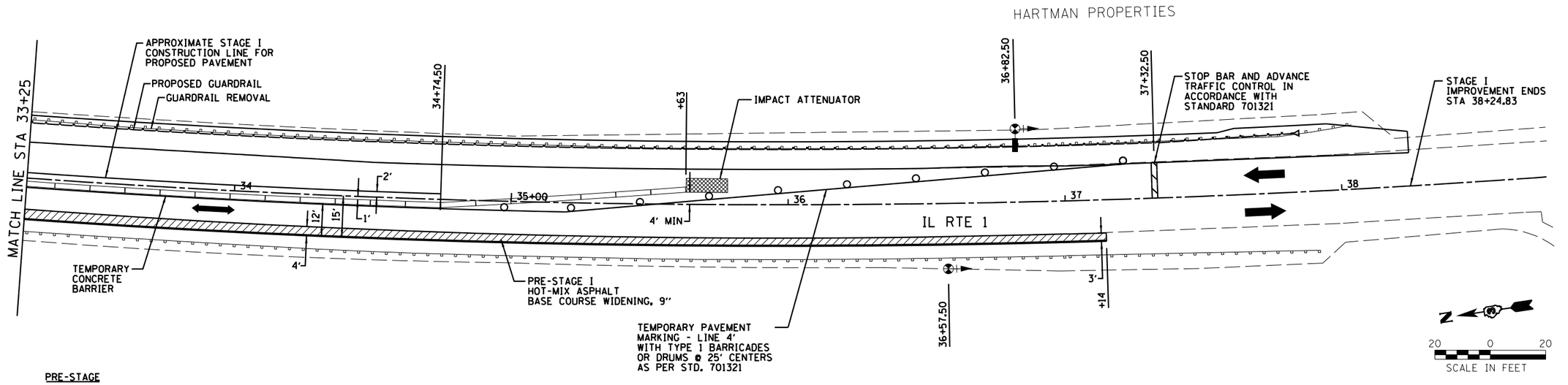

PRE-STAGE

1. PERFORM PIPE CULVERT REMOVAL AND REPLACEMENT AT STA 19+90.90 AND STA 21+02.50 UNDER TRAFFIC CONTROL AND PROTECTION STANDARD 701201 ONE LANE AT A TIME. COMPLETELY BACK FILL PIPE CULVERT TRENCHES AT THE END OF WORK DAY AND OPEN TRAFFIC TO BOTH LANES.

2. PERFORM BASE COURSE WIDENING ON THE RIGHT SIDE OF IL RTE 1 FROM STA 14+45 TO STA 37+14 AND TEMPORARY WIDENING ON THE SOUTH SIDE OF TR 1950E STAGE I UNDER TRAFFIC CONTROL AND PROTECTION STANDARD 701326 PRIOR TO STAGE I MAINLINE.

STAGE I, IA, IB & IC

1. INSTALL TEMPORARY SIGNALS AND TEMPORARY CONCRETE BARRIER IN ACCORDANCE WITH TRAFFIC CONTROL AND PROTECTION STANDARD 701321. LEAVE A GAP IN TEMPORARY CONCRETE BARRIER FOR THE COMMERCIAL ENTRANCE AT LT STA 20+39 AS NOTED, AND DIVERT TRAFFIC TO THE WEST SIDE.

2. COMPLETE WORK UNDER STAGE IA INCLUDING WIDENING THE COMMERCIAL ENTRANCE AT LT STA 20+39 TO THE NORTH WHILE MAINTAINING TRAFFIC TO THE ENTRANCE ON THE SOUTH HALF OF THE ENTRANCE.

3. AFTER THE STAGE I WORK ON THE BRIDGE IS COMPLETED AND ALL STAGE IA ROAD WORK BETWEEN THE BRIDGE IS COMPLETED, CONSTRUCT THE STAGE IB PORTION OF THE COMMERCIAL ENTRANCE AND STAGE IB ROADWAY TO CONNECT TO THE BRIDGE. COMPLETE THE REMAINING STAGE IB WORK AND PREPARE FOR STAGE II WORK.

4. COMMERCIAL ENTRANCE TRAFFIC DIVERTED ACROSS BRIDGE DURING STAGE IC WILL BE GUIDED AROUND EAST END OF THE IMPACT ATTENTUATOR LOCATED AT LT STA 35+63 USING FLAGMEN.

LEGEND

- TEMPORARY CONCRETE BARRIER
- TRAFFIC SIGNAL WITH SIGNAL DIRECTION INDICATOR AND BACK PLATE
- BARRICADE TYPE III
- MAINLINE TRAFFIC
- HMA BASE COURSE WIDENING, 9"
- TC-26 MICROWAVE DETECTOR
- IMPACT ATTENUATORS
- DRUM WITH STEADY BURNING LIGHT
- PAVEMENT REMOVAL

Farnsworth GROUP, INC.
2709 McGraw Drive
Bloomington, Illinois 61704
309/663-8435, 309/663-1571 fax

DESIGNED - NAS/JJO	REVISED -		
DRAWN - JJO/DRR	REVISED -		
CHECKED - MSW	REVISED -		
DATE - 04/10/14	REVISED -		

STATE OF ILLINOIS
DEPARTMENT OF TRANSPORTATION

IL ROUTE 1
STAGE OF CONSTRUCTION – STAGE I

SCALE: SHEET OF SHEETS STA. TO STA.

F.A.P RTE.	SECTION	COUNTY	TOTAL SHEETS	SHEET NO.
332	(3)BR	IROQUOIS	100	26

CONTRACT NO. 66736

ILLINOIS FED. AID PROJECT

24-8052

STAGE II & IIA & IIB

1. MOVE TEMPORARY CONCRETE BARRIER TO STAGE II LOCATION IN ACCORDANCE WITH TRAFFIC CONTROL AND PROTECTION STANDARD 701321. LEAVE GAP IN TRAFFIC CONTROL BARRIER FOR TR 1950E AT RT STA 20+39 AS NOTED. WITH TEMPORARY CONCRETE BARRIER IN STAGE II LOCATION, SWITCH MAINLINE TRAFFIC OVER TO THE EAST SIDE.

2. AFTER STAGING SWITCH, COMPLETE TEMPORARY RAMP CONNECTION OF TR 1950E TO EAST LANE OF MAINLINE ACCORDING TO DETAIL A (SHEET 29). DURING CONSTRUCTION OF THE TEMPORARY RAMP CONNECTION, MAINTAIN ACCESS TO TR 1950E BY DIVERTING TRAFFIC SOUTH OVER EXISTING BRIDGE AND AROUND IMPACT ATTENUATORS LOCATED AT RT STA 35+63 USING FLAGMEN.

3. ONCE THE TEMPORARY RAMP CONNECTION WORK IS COMPLETED, MAINTAIN ACCESS TO TR 1950E BY DIVERTING TR 1950E TRAFFIC OVER TO NEWLY CONSTRUCTED EAST LANE OF MAINLINE. TR 1950E TRAFFIC WILL NOW UTILIZE INSTALLED TEMPOARY TRAFFIC SIGNALS.

4. COMPLETE WORK UNDER STAGE IIA WHILE MAINTAINING TRAFFIC TO TR 1950E ALONG THE NORTH HALF OF TR 1950E.

5. AFTER STAGE II WORK ON THE BRIDGE IS COMPLETED AND ALL STAGE IIA ROAD WORK IS COMPLETED, CONSTRUCT THE STAGE IIB ROADWAY PORTION UP TO THE TR 1950E TEMPORARY RAMP CONNECTION.

6. CONTINUE STAGE IIB ROADWAY WORK BY CORING THE SOUTH HALF OF THE TEMPORARY RAMP CONNECTION AND CONSTRUCTING PROPOSED MAINLINE PAVEMENT AND SHOULDER. MAINTAIN ACCESS TO TR 1950E FROM MAINLINE USING NORTH SIDE OF TR 1950E AND FLAGMEN.

7. COMPLETE STAGE IIB ROADWAY WORK BY CORING OUT THE NORTH HALF OF THE TEMPOARY RAMP CONNECTION AND CONSTRUCTING THE PROPOSED MAINLINE PAVEMENT AND SHOULDER. MAINTAIN ACCESS TO TR 1950E FROM MAINLINE USING SOUTH SIDE OF TR 1950E AND FLAGMEN.

8. PLACE TEMPORARY PAVEMENT MARKINGS AND REMOVE TEMPORARY CONCRETE BARRIERS AND TRAFFIC CONTROL.

STAGE III

1. COMPLETE HMA SURFACE COURSE ON MAINLINE PAVEMENT ACCORDING TO PROPOSED TYPICAL SECTIONS UNDER TRAFFIC CONTROL AND PROTECTION STANDARD 701201. ACCESS SHOULD BE PROVIDED AT ALL TIMES TO TR 1950E AND THE COMMERCIAL ENTRANCE.

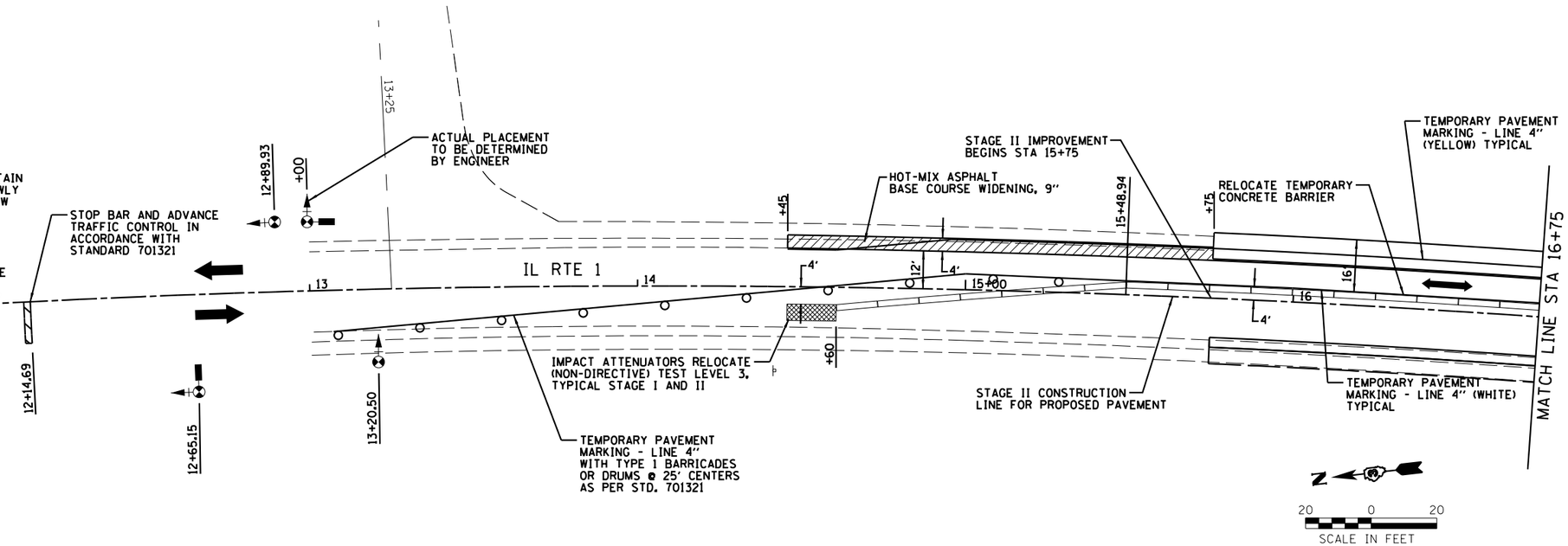

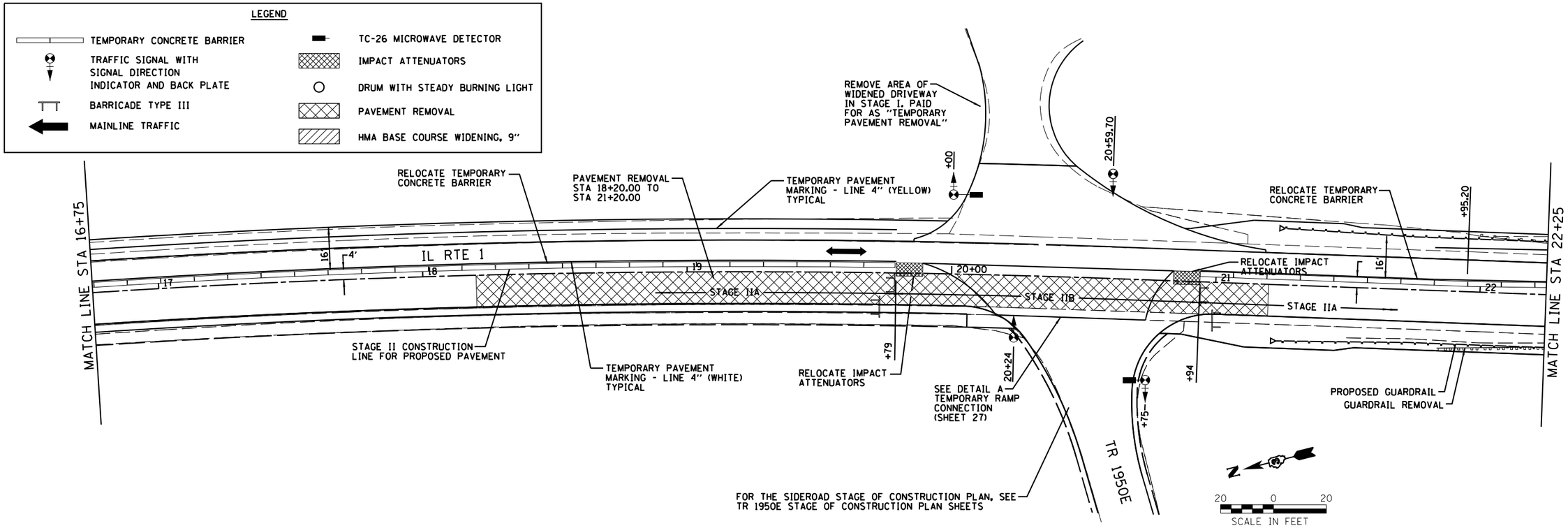

Farnsworth GROUP, INC.
2709 McGraw Drive
Bloomington, Illinois 61704
309/663-8435, 309/663-1571 fax

DESIGNED - NAS/JJO	REVISED -		
DRAWN - JJO/DRR	REVISED -		
CHECKED - MSW	REVISED -		
DATE - 04/10/14	REVISED -		

STATE OF ILLINOIS
DEPARTMENT OF TRANSPORTATION

IL ROUTE 1
STAGE OF CONSTRUCTION – STAGE II

SCALE: | SHEET OF SHEETS | STA. TO STA.

F.A.P RTE.	SECTION	COUNTY	TOTAL SHEETS	SHEET NO.
332	(3)BR	IROQUOIS	100	27

CONTRACT NO. 66736

ILLINOIS FED. AID PROJECT

24-8052

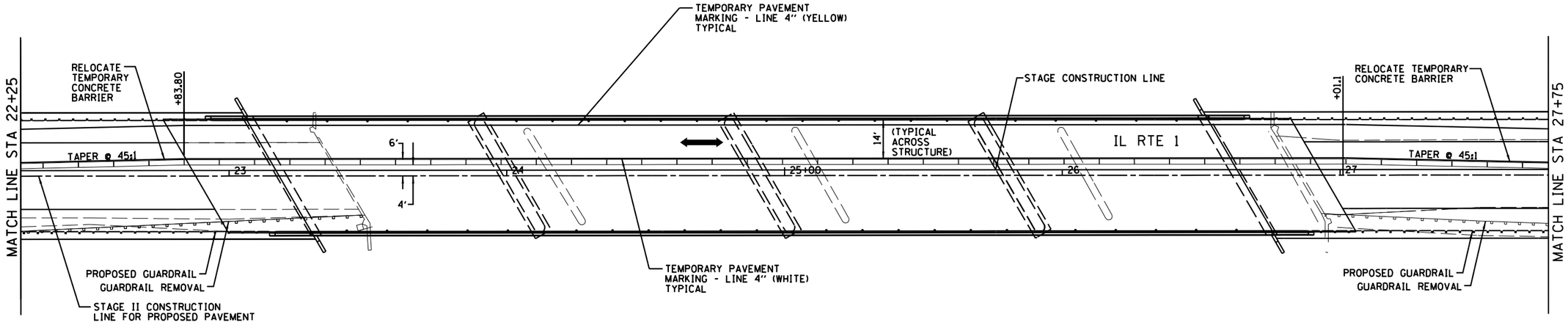

LEGEND

- TEMPORARY CONCRETE BARRIER
- TRAFFIC SIGNAL WITH SIGNAL DIRECTION INDICATOR AND BACK PLATE
- BARRICADE TYPE III
- MAINLINE TRAFFIC
- TC-26 MICROWAVE DETECTOR
- IMPACT ATTENUATORS
- DRUM WITH STEADY BURNING LIGHT
- PAVEMENT REMOVAL

20 0 20
SCALE IN FEET

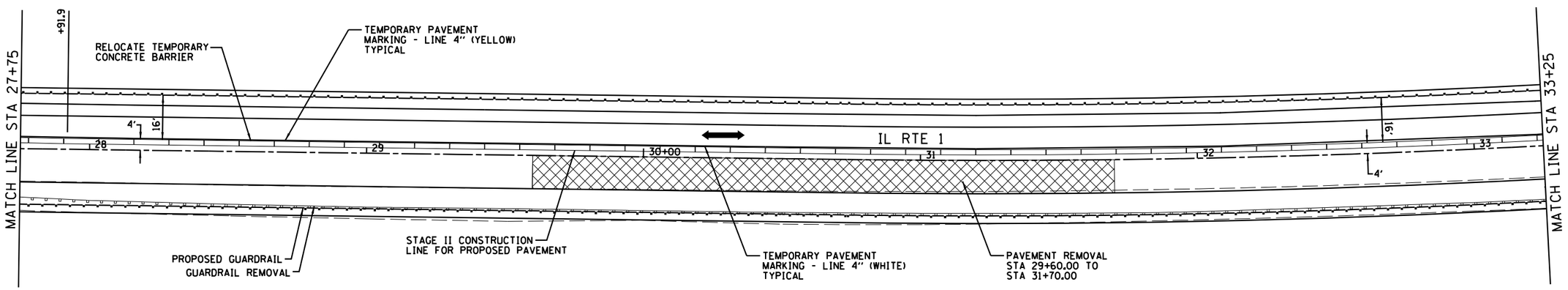

20 0 20
SCALE IN FEET

STAGE II & IIA & IIB

1. MOVE TEMPORARY CONCRETE BARRIER TO STAGE II LOCATION IN ACCORDANCE WITH TRAFFIC CONTROL AND PROTECTION STANDARD 701321. LEAVE GAP IN TRAFFIC CONTROL BARRIER FOR TR 1950E AT RT STA 20+39 AS NOTED. WITH TEMPORARY CONCRETE BARRIER IN STAGE II LOCATION, SWITCH MAINLINE TRAFFIC OVER TO THE EAST SIDE.
2. AFTER STAGING SWITCH, COMPLETE TEMPORARY RAMP CONNECTION OF TR 1950E TO EAST LANE OF MAINLINE ACCORDING TO DETAIL A (SHEET 29). DURING CONSTRUCTION OFTHE TEMPORARY RAMP CONNECTION, MAINTAIN ACCESS TO TR 1950E BY DIVERTING TRAFFIC SOUTH OVER EXISTING BRIDGE AND AROUND IMPACT ATTENUATORS LOCATED AT RT STA 35+63 USING FLAGMEN
3. ONCE THE TEMPORARY RAMP CONNECTION WORK IS COMPLETED, MAINTAIN ACCESS TO TR 1950E BY DIVERTING TR 1950E TRAFFIC OVER TO NEWLY CONSTRUCTED EAST LANE OF MAINLINE. TR 1950E TRAFFIC WILL NOW UTILIZE INSTALLED TEMPOARY TRAFFIC SIGNALS.
4. COMPLETE WORK UNDER STAGE IIA WHILE MAINTAINING TRAFFIC TO TR 1950E ALONG THE NORTH HALF OF TR 1950E.
5. AFTER STAGE II WORK ON THE BRIDGE IS COMPLETED AND ALL STAGE IIA ROAD WORK IS COMPLETED, CONSTRUCT THE STAGE IIB ROADWAY PORTION UP TO THE TR 1950E TEMPORARY RAMP CONNECTION.
6. CONTINUE STAGE IIB ROADWAY WORK BY CORING THE SOUTH HALF OF THE TEMPORARY RAMP CONNECTION AND CONSTRUCTING PROPOSED MAINLINE PAVEMENT AND SHOULDER. MAINTAIN ACCESS TO TR 1950E FROM MAINLINE USING NORTH SIDE OF TR 1950E AND FLAGMEN.
7. COMPLETE STAGE IIB ROADWAY WORK BY CORING OUT THE NORTH HALF OF THE TEMPOARY RAMP CONNECTION AND CONSTRUCTING THE PROPOSED MAINLINE PAVEMENT AND SHOULDER. MAINTAIN ACCESS TO TR 1950E FROM MAINLINE USING SOUTH SIDE OF TR 1950E AND FLAGMEN.
8. PLACE TEMPORARY PAVEMENT MARKINGS AND REMOVE TEMPORARY CONCRETE BARRIERS AND TRAFFIC CONTROL.

STAGE III

1. COMPLETE HMA SURFACE COURSE ON MAINLINE PAVEMENT ACCORDING TO PROPOSED TYPICAL SECTIONS UNDER TRAFFIC CONTROL AND PROTECTION STANDARD 701201. ACCESS SHOULD BE PROVIDED AT ALL TIMES TO TR 1950E AND THE COMMERCIAL ENTRANCE.

20 0 20
SCALE IN FEET

Farnsworth GROUP, INC.
2709 McGraw Drive
Bloomington, Illinois 61704
309/663-8435, 309/663-1571 fax

DESIGNED - NAS/JJO	REVISED -		
DRAWN - JJO/DRR	REVISED -		
CHECKED - MSW	REVISED -		
DATE - 04/10/14	REVISED -		

STATE OF ILLINOIS
DEPARTMENT OF TRANSPORTATION

IL ROUTE 1
STAGE OF CONSTRUCTION – STAGE II

SCALE: SHEET OF SHEETS STA. TO STA.

F.A.P RTE.	SECTION	COUNTY	TOTAL SHEETS	SHEET NO.
332	(3)BR	IROQUOIS	100	28

CONTRACT NO. 66736
ILLINOIS FED. AID PROJECT

24-8052

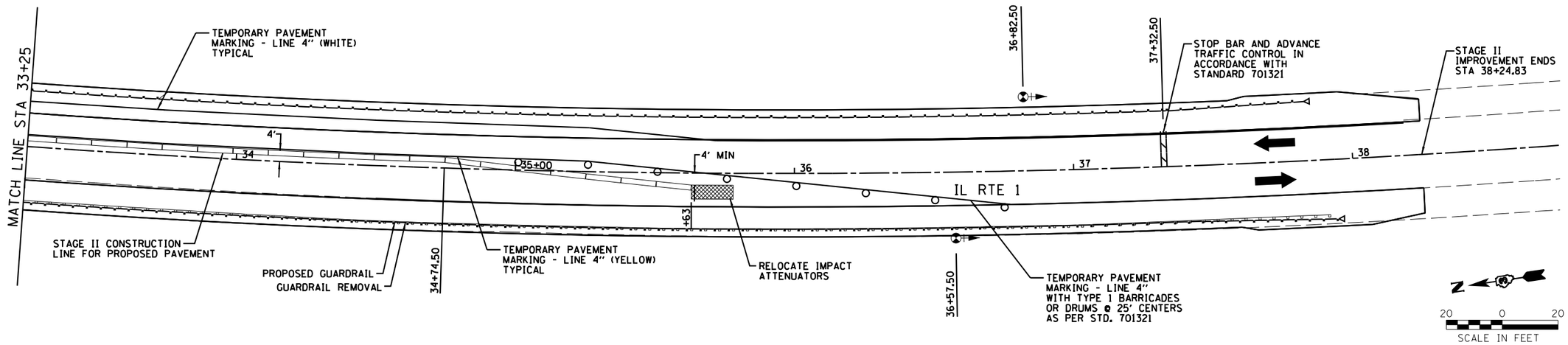

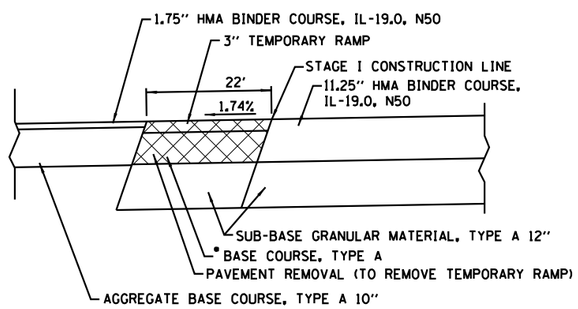

DETAIL A

TEMPORARY RAMP CONNECTION AT TR 1950E

*COST INCLUDED WITH TEMPORARY RAMP

LEGEND

- TEMPORARY CONCRETE BARRIER
- TRAFFIC SIGNAL WITH SIGNAL DIRECTION INDICATOR AND BACK PLATE
- BARRICADE TYPE III
- MAINLINE TRAFFIC
- TC-26 MICROWAVE DETECTOR
- IMPACT ATTENUATORS
- DRUM WITH STEADY BURNING LIGHT
- PAVEMENT REMOVAL

STAGE II & IIA & IIB

1. MOVE TEMPORARY CONCRETE BARRIER TO STAGE II LOCATION IN ACCORDANCE WITH TRAFFIC CONTROL AND PROTECTION STANDARD 701321. LEAVE GAP IN TRAFFIC CONTROL BARRIER FOR TR 1950E AT RT STA 20+39 AS NOTED. WITH TEMPORARY CONCRETE BARRIER IN STAGE II LOCATION, SWITCH MAINLINE TRAFFIC OVER TO THE EAST SIDE.

2. AFTER STAGING SWITCH, COMPLETE TEMPORARY RAMP CONNECTION OF TR 1950E TO EAST LANE OF MAINLINE ACCORDING TO DETAIL A. DURING CONSTRUCTION OF THE TEMPORARY RAMP CONNECTION, MAINTAIN ACCESS TO TR 1950E BY DIVERTING TRAFFIC SOUTH OVER EXISTING BRIDGE AND AROUND IMPACT ATTENUATORS LOCATED AT RT STA 35+63 USING FLAGMEN.

3. ONCE THE TEMPORARY RAMP CONNECTION WORK IS COMPLETED, MAINTAIN ACCESS TO TR 1950E BY DIVERTING TR 1950E TRAFFIC OVER TO NEWLY CONSTRUCTED EAST LANE OF MAINLINE. TR 1950E TRAFFIC WILL NOW UTILIZE INSTALLED TEMPOARY TRAFFIC SIGNALS.

4. COMPLETE WORK UNDER STAGE IIA WHILE MAINTAINING TRAFFIC TO TR 1950E ALONG THE NORTH HALF OF TR 1950E.

5. AFTER STAGE II WORK ON THE BRIDGE IS COMPLETED AND ALL STAGE IIA ROAD WORK IS COMPLETED, CONSTRUCT THE STAGE IIB ROADWAY PORTION UP TO THE TR 1950E TEMPORARY RAMP CONNECTION.

6. CONTINUE STAGE IIB ROADWAY WORK BY CORING THE SOUTH HALF OF THE TEMPORARY RAMP CONNECTION AND CONSTRUCTING PROPOSED MAINLINE PAVEMENT AND SHOULDER. MAINTAIN ACCESS TO TR 1950E FROM MAINLINE USING NORTH SIDE OF TR 1950E AND FLAGMEN.

7. COMPLETE STAGE IIB ROADWAY WORK BY CORING OUT THE NORTH HALF OF THE TEMPOARY RAMP CONNECTION AND CONSTRUCTING THE PROPOSED MAINLINE PAVEMENT AND SHOULDER. MAINTAIN ACCESS TO TR 1950E FROM MAINLINE USING SOUTH SIDE OF TR 1950E AND FLAGMEN.

8. PLACE TEMPORARY PAVEMENT MARKINGS AND REMOVE TEMPORARY CONCRETE BARRIERS AND TRAFFIC CONTROL.

STAGE III

1. COMPLETE HMA SURFACE COURSE ON MAINLINE ACCORDING TO PROPOSED TYPICAL SECTIONS UNDER TRAFFIC CONTROL AND PROTECTION STANDARD 701201. ACCESS SHOULD BE PROVIDED AT ALL TIMES TO TR 1950E AND THE COMMERCIAL ENTRANCE.

Farnsworth GROUP, INC.
2709 McGraw Drive
Bloomington, Illinois 61704
309/663-8435, 309/663-1571 fax

DESIGNED - NAS/JJO	REVISED -		
DRAWN - JJO/DRR	REVISED -		
CHECKED - MSW	REVISED -		
DATE - 04/10/14	REVISED -		

STATE OF ILLINOIS
DEPARTMENT OF TRANSPORTATION

IL ROUTE 1
STAGE OF CONSTRUCTION – STAGE II

SCALE: SHEET OF SHEETS STA. TO STA.

F.A.P RTE.	SECTION	COUNTY	TOTAL SHEETS	SHEET NO.
332	(3)BR	IROQUOIS	100	29

CONTRACT NO. 66736

ILLINOIS FED. AID PROJECT

24-8052

PRE-STAGE (ROADWAY)

1. CONSTRUCT TEMPORARY WIDENING (9" THICK) ON SOUTH SIDE OF TR 1950E, DURING THE MAINLINE PRE-STAGE.

STAGE I (TR 1950E)

1. INSTALL TRAFFIC CONTROL ACCORDING TO STAGE I PLANS AND DIVERT TRAFFIC ONTO SOUTH LANE OF TR 1950E AND TEMPORARY WIDENING.
2. CONSTRUCT PROPOSED NORTH SIDE OF PAVEMENT AND TEMPORARY WIDENING (9" THICK) AS SHOWN IN TR 1950E STAGE I CROSS SECTIONS.
3. CONSTRUCT TEMPORARY RAMP CONNECTION UP TO EAST LANE OF MAINLINE IMMEDIATELY AFTER MAINLINE TRAFFIC HAS BEEN SWITCHED TO THE EAST LANE OF MAINLINE. TEMPORARY RAMP CONNECTION PAVEMENT MUST BE COMPLETED THE SAME WORKING DAY.

STAGE II (TR 1950E)

1. MOVE TRAFFIC CONTROL TO LOCATIONS SHOWN ON STAGE II PLANS AND DIVERT TRAFFIC ONTO THE NEWLY CONSTRUCTED NORTH LANE AND TEMPORARY WIDENING. ALL WORK MUST BE PERFORMED THE SAME WORKING DAY AS COMPLETION OF TEMPORARY RAMP CONNECTION PAVEMENT.
2. REMOVE TEMPORARY WIDENING ON SOUTH SIDE OF EXISTING PAVEMENT AND CONSTRUCT THE PROPOSED SOUTH LANE OF PAVEMENT AS SHOWN IN TR 1950E STAGE II CROSS SECTIONS. REMOVAL INCLUDED IN EARTH EXCAVATION QUANTITIES.

STAGE III

1. DIVERT TRAFFIC ONTO NEWLY COMPLETED TR 1950E AFTER COMPLETION OF STAGE IIB OF MAINLINE PAVEMENT.
2. REMOVE TEMPORARY WIDENING ON NORTH SIDE OF TR 1950E AND COMPLETE FINAL GRADING AND SHOULDERS ON NORTH SIDE OF TR 1950E AS SHOWN IN TR 1950E STAGE III CROSS SECTIONS. REMOVAL INCLUDED IN EARTH EXCAVATION QUANTITIES.

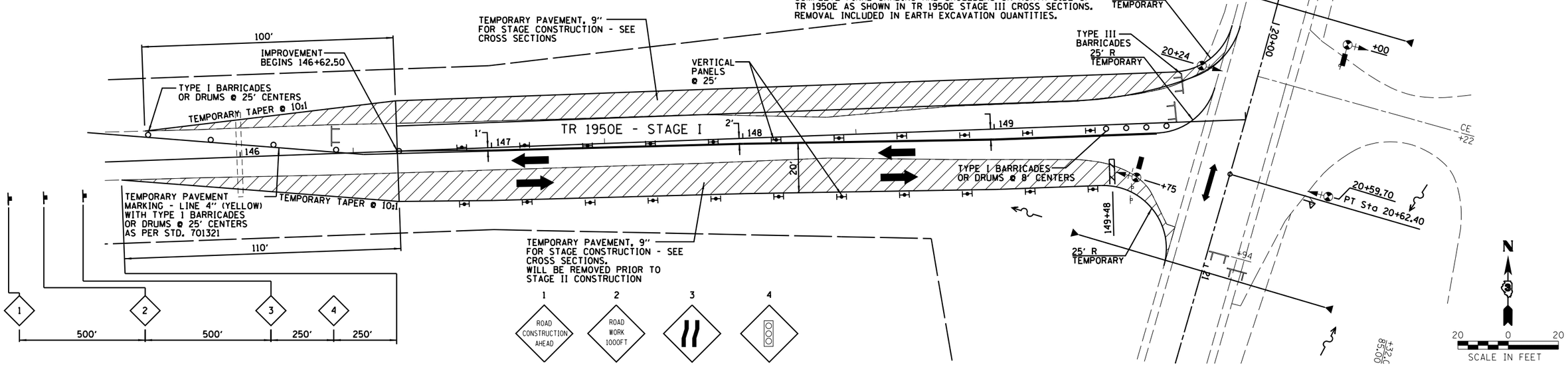

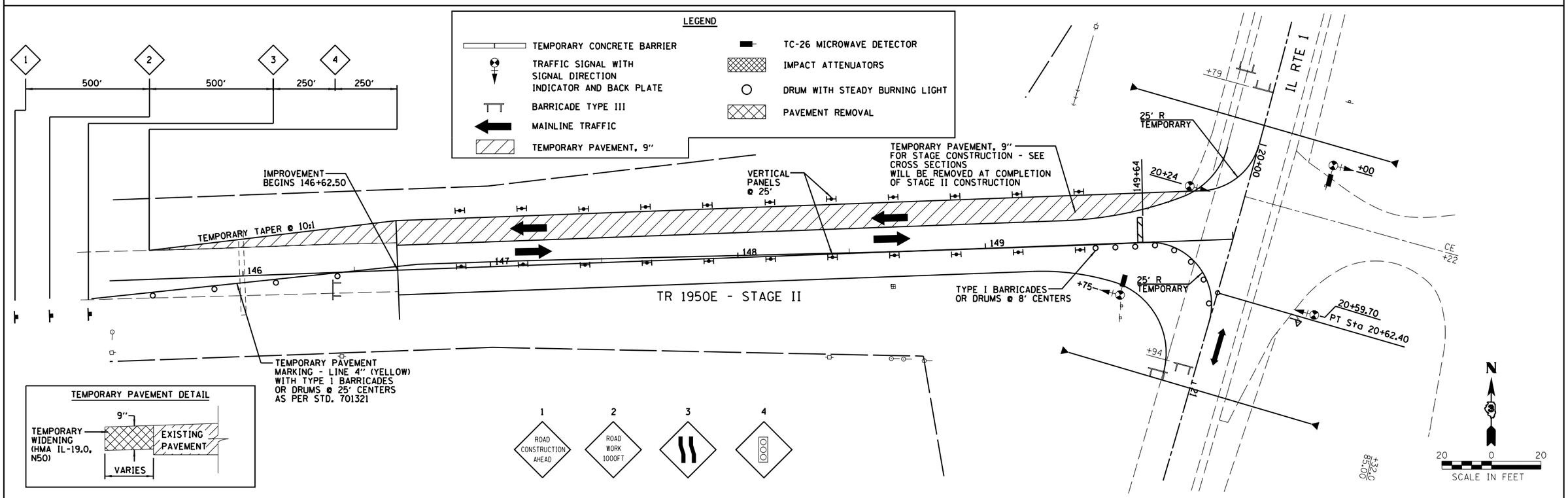

Farnsworth GROUP, INC.
2709 McGraw Drive
Bloomington, Illinois 61704
309/663-8435, 309/663-1571 fax

DESIGNED	- NAS/JJO	REVISED	-
DRAWN	- JJO/DRR	REVISED	-
CHECKED	- MSW	REVISED	-
DATE	- 04/10/14	REVISED	-

STATE OF ILLINOIS
DEPARTMENT OF TRANSPORTATION

TR 1950E
STAGE OF CONSTRUCTION – STAGE I & STAGE II

SCALE: | SHEET OF SHEETS | STA. TO STA.

F.A.P RTE.	SECTION	COUNTY	TOTAL SHEETS	SHEET NO.
332	(3)BR	IROQUOIS	100	30

CONTRACT NO. 66736

ILLINOIS FED. AID PROJECT

24-8052

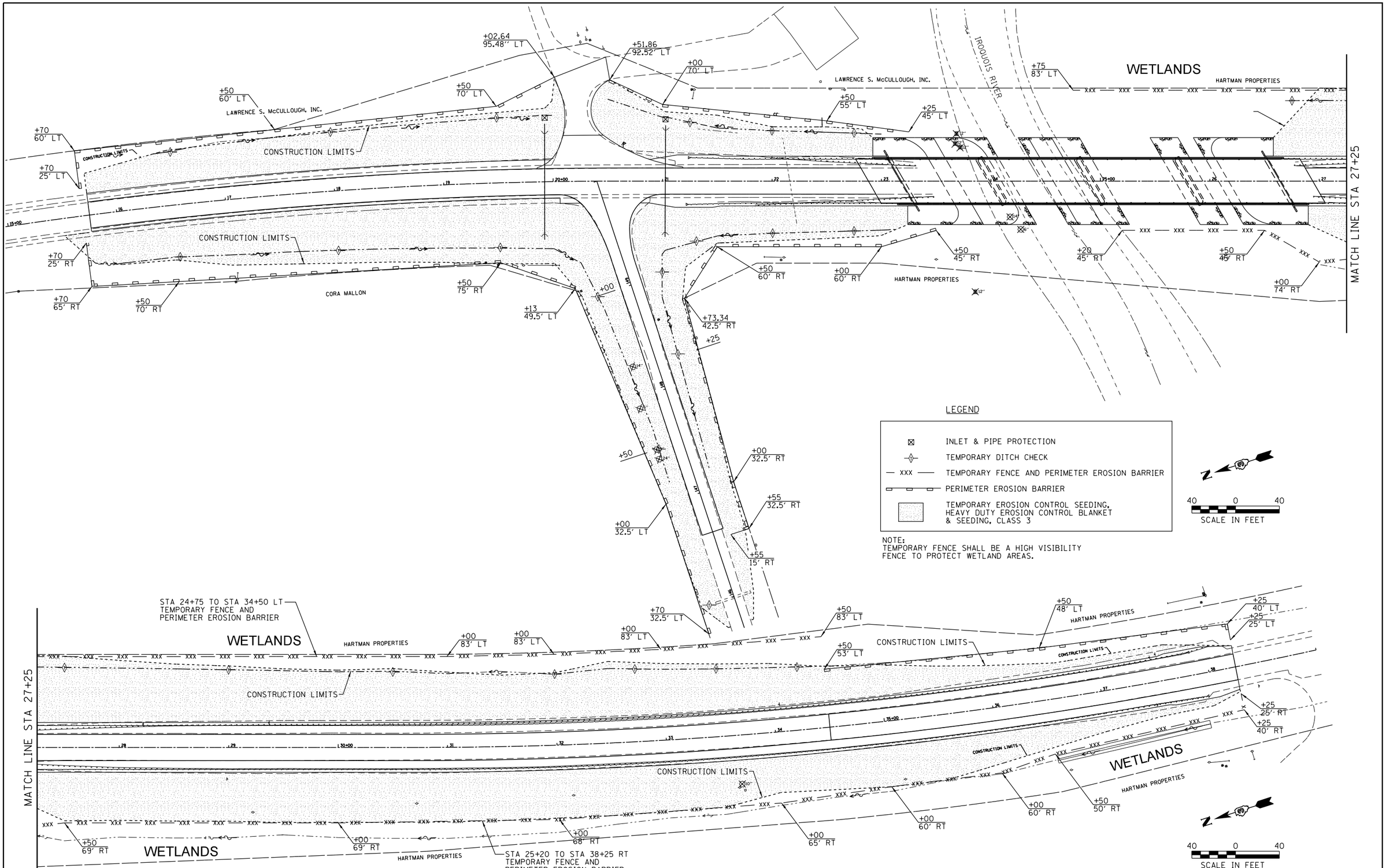

Farnsworth GROUP, INC.
2709 McGraw Drive
Bloomington, Illinois 61704
309/663-8435, 309/663-1571 fax

DESIGNED - NAS/JJO	REVISED -		
DRAWN - JJO/DRR	REVISED -		
CHECKED - MSW	REVISED -		
DATE - 04/10/14	REVISED -		

STATE OF ILLINOIS
DEPARTMENT OF TRANSPORTATION

EROSION CONTROL

SCALE: | SHEET OF SHEETS | STA. TO STA.

F.A.P RTE.	SECTION	COUNTY	TOTAL SHEETS	SHEET NO.
332	(3)BR	IROQUOIS	100	31

CONTRACT NO. 66736

ILLINOIS FED. AID PROJECT

24-8052

Benchmark: BM #2 Railroad spike in power pole, Station 22+52.88, 84.23' LT., Elevation 628.77.

Existing Structure: Structure No. 038-0021, built in 1956 as Section 3B-R & 3F-R. The superstructure consists of a continuous four span non-composite rolled steel beam bridge with a 6½" concrete slab. The substructure consists of concrete pile bent abutments supported by steel piles and concrete solid wall pile bent piers supported by untreated timber piles. The back to back of abutments dimension measures 346'-7" and the out to out dimension measures 33'-8". The span lengths are 75'-0", 96'-0", 96'-0" and 75'-0" (℄ bearing to ℄ bearing) with a 30 degree right forward skew. One lane of traffic will be maintained utilizing stage construction.

Salvage: Existing steel railing, Type 2399. See Special Provision "Salvage Existing Bridge Rail".

WATERWAY INFORMATION

Drainage Area = 739.00 Sq. Mi. — Existing Low Grade Elev. 626.60 @ Sta. 74+46; Proposed Low Grade Elev. 626.60 @ Sta. 74+46

Flood	Freq. Yr.	Q C.F.S.	Opening Sq. Ft. Exist.	Opening Sq. Ft. Prop.	Nat. H.W.E.	Head - Ft. Exist.	Head - Ft. Prop.	Headwater El. Exist.	Headwater El. Prop.
Overtop	10	6758	4117	4254	626.3	0.1	0.1	626.4	626.4
Design	50	9488	4953	5181	629.6	0.2	0.1	629.8	629.7
Base	100	10,713	4953	5533	630.8	0.1	0.1	630.9	630.9
Max. Calc.	500	13,585	4953	5691	633.4	0.1	0.0	633.5	633.4

10 year velocity through Existing Structure = 1.60 fps
10 year velocity through Proposed Structure = 1.60 fps

DESIGN SCOUR ELEVATION TABLE

	North Abut.	Pier 1	Pier 2	Pier 3	South Abut.
Design Scour Elevation (ft.)	628.20	586.10	587.10	590.10	628.19

INDEX OF SHEETS

SHEET NO.	TITLE
B1	GENERAL PLAN AND ELEVATION
B2	GENERAL DATA
B3	FOOTING LAYOUT
B4	STAGE CONSTRUCTION DETAILS
B5	TEMPORARY CONCRETE BARRIER FOR STAGE CONSTRUCTION
B6-B9	TOP OF DECK ELEVATIONS
B10	TOP OF APPROACH SLAB ELEVATIONS
B11	SUPERSTRUCTURE
B12	SUPERSTRUCTURE DETAILS
B13	DIAPHRAGM DETAILS - NORTH ABUTMENT
B14	DIAPHRAGM DETAILS - SOUTH ABUTMENT
B15	DIAPHRAGM DETAILS - PIERS
B16-B17	BRIDGE APPROACH SLAB DETAILS
B18	FRAMING PLAN
B19	48" PPC I-BEAM (SPANS 1 & 4)
B20	48" PPC I-BEAM (SPANS 2 & 3)
B21	48" PPC I-BEAM DETAILS
B22	NORTH ABUTMENT
B23	SOUTH ABUTMENT
B24	PIER NO. 1
B25	PIER NO. 2
B26	PIER NO. 3
B27	PIER DETAILS
B28	HP PILE DETAILS
B29	BAR SPLICER ASSEMBLY AND MECHANICAL SPLICER DETAILS
B30	CONCRETE PARAPET SLIPFORMING OPTION
B31-B34	SOIL BORING LOGS

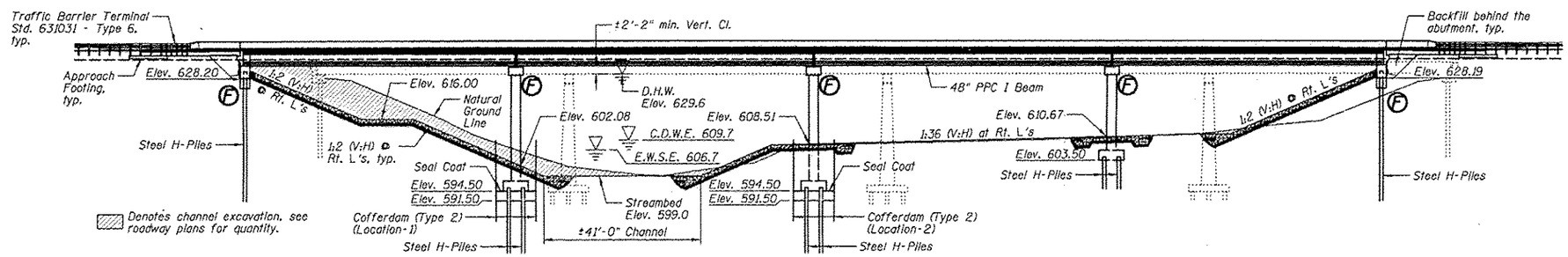

ELEVATION

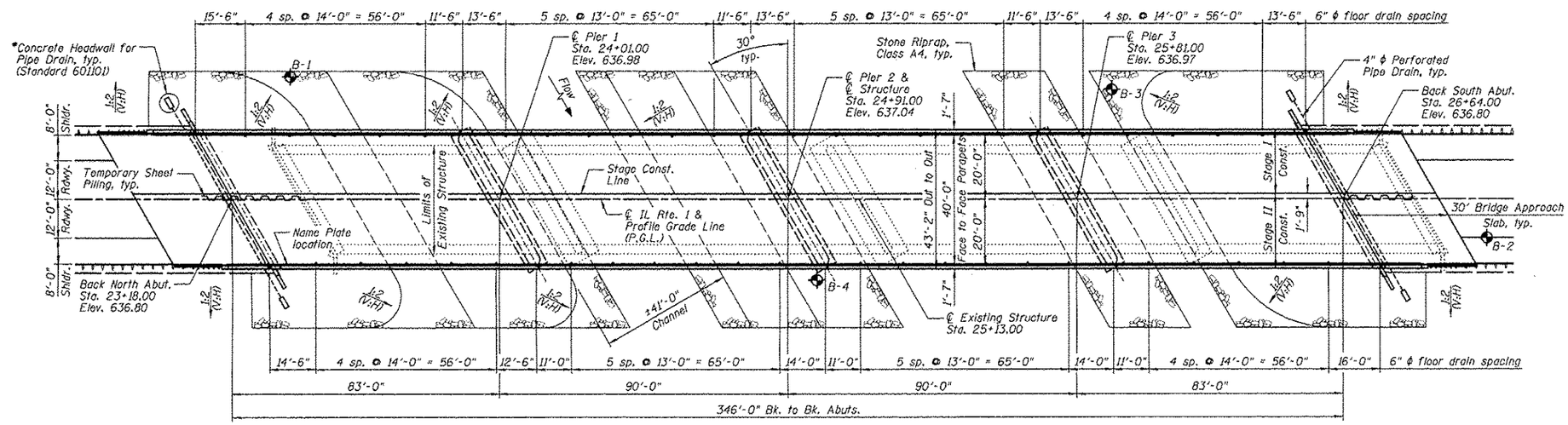

PLAN

*Included in the cost of Pipe Underdrains for Structures 4".

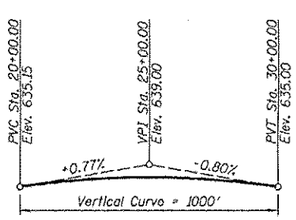

PROFILE GRADE

(Along ℄ Roadway)

STATION 24+91.00
BUILT 20__ BY
STATE OF ILLINOIS
F.A.P. RT. 332 SEC. (3)BR
LOADING HL-93
STRUCTURE NO. 038-0219

NAME PLATE

See Standard 515001

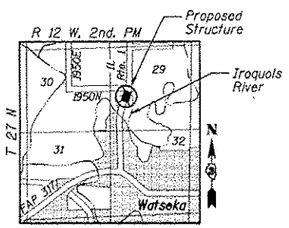

LOCATION SKETCH

DESIGN SPECIFICATIONS

2010 AASHTO LRFD Bridge Design Specifications, 5th Edition (2010 Interim Revisions)

DESIGN STRESSES

FIELD UNITS
f'c = 3,500 psi
fy = 60,000 psi (reinforcement)

PRECAST UNITS
f'c = 7,000 psi
f'ci = 6,000 psi
f's = 270,000 psi (½" dia. low lax strands)
fsi = 201,960 psi (½" dia. low lax strands)

LOADING HL-93

Allow 50#/sq. ft. for future wearing surface.

SEISMIC DATA

Seismic Performance Zone (SPZ) = 1
Design Spectral Acceleration at 1.0 sec. (SD1) = 0.108 g
Design Spectral Acceleration at 0.2 sec. (SDs) = 0.177 g
Soil Site Class = D

JOSEPH M. LOWRANCE 081-006446 LICENSED STRUCTURAL ENGINEER OF BLOOMINGTON ILLINOIS

Joseph M. Lowrance Date 04-10-14
JOSEPH M. LOWRANCE
ILLINOIS STRUCTURAL ENGINEER
NO. 081-006446
Exp. Date 11/30/14

APPROVED
For Structural Adequacy Only
D. Carl Rungay
Engineer of Bridges & Structures

GENERAL PLAN AND ELEVATION
IL ROUTE 1 OVER IROQUOIS RIVER
F.A.P. ROUTE 332 - SECTION (3)BR
IROQUOIS COUNTY
STATION 24+91.00
STRUCTURE NO. 038-0219

Farnsworth GROUP, INC.
2709 McGraw Drive
Bloomington, Illinois 61704
309/663-8435, 309/663-1571 fax

DESIGNED - JML	REVISED	
CHECKED - MSW	REVISED	
DRAWN - DJM	REVISED	
DATE - 04/10/14	CHECKED - MSW	REVISED

STATE OF ILLINOIS
DEPARTMENT OF TRANSPORTATION

GENERAL PLAN AND ELEVATION
STRUCTURE NO. 038-0219
SHEET NO. B1 OF 34 SHEETS

F.A.P. RTE.	SECTION	COUNTY	TOTAL SHEETS	SHEET NO.
332	(3)BR	IROQUOIS	100	32

CONTRACT NO. 66736
ILLINOIS FED. AID PROJECT

24-8052

TOTAL BILL OF MATERIAL

ITEM	UNIT	SUPER	SUB	TOTAL
Stone Riprap, Class A4	Sq. Yd.		2,313	2,313
Filter Fabric	Sq. Yd.		2,313	2,313
Removal of Existing Structures	Each	1		1
Structure Excavation	Cu. Yd.		430	430
Cofferdam Excavation	Cu. Yd.		563	563
Cofferdam (Type 2) (Location - 1)	Each		1	1
Cofferdam (Type 2) (Location - 2)	Each		1	1
Floor Drains	Each	44		44
Concrete Structures	Cu. Yd.		593.7	593.7
Concrete Superstructure	Cu. Yd.	679.0		679.0
Bridge Deck Grooving	Sq. Yd.	1,718		1,718
Seal Coat Concrete	Cu. Yd.		122.6	122.6
Concrete Encasement	Cu. Yd.		9.8	9.8
Protective Coat	Sq. Yd.	2,128		2,128
Furnishing and Erecting Precast Prestressed Concrete I-Beams, 48 in.	Foot	2,047		2,047
Reinforcement Bars, Epoxy Coated	Pound	178,140	55,760	233,900
Bar Splicers	Each	1,430	224	1,654
Mechanical Splicers	Each		522	522
Furnishing Steel Piles HP14x89	Foot		6,211	6,211
Driving Piles	Foot		6,211	6,211
Test Pile Steel HP14x89	Each		2	2
Name Plates	Each	1		1
Geocomposite Wall Drain	Sq. Yd.		96	96
Temporary Sheet Piling	Sq. Ft.		866	866
Pipe Underdrains For Structures 4"	Foot		176	176
Granular Backfill for Structures	Cu. Yd.		192	192

GENERAL NOTES:

1.) Reinforcement bars designated (E) shall be epoxy coated.
2.) The existing structural steel coating contains lead. The Contractor shall take appropriate precautions to deal with the presence of lead on this project.
3.) Layout of the slope protection system may be varied to suit ground conditions in the field as directed by the Engineer.
4.) Seal coat thickness design is based on the Estimated Water Surface Elevation (EWSE). Cofferdam design details and proposed changes in seal coat thickness shall be submitted to the Engineer for approval with the cofferdam design.
5.) The embankment configuration shown shall be the minimum that must be placed and compacted prior to construction of the abutments.

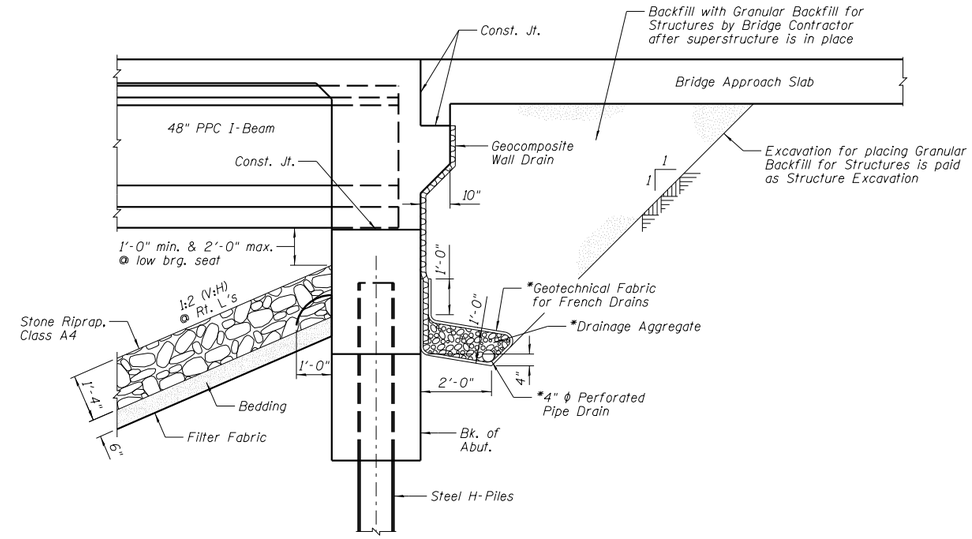

SECTION THRU SOUTH ABUTMENT

(Similar for North Abutment)

NOTES:

1.) Horizontal dimensions @ Rt. L's to Abutment.
2.) *Included in the cost of Pipe Underdrains for Structures 4".
3.) All drainage system components shall extend to 2'-0" from the end of each wingwall except an outlet pipe shall extend until intersecting with the side slopes. The pipes shall drain into concrete headwalls. (See Article 601.05 of the Standard Specifications and Highway Standard 601101).

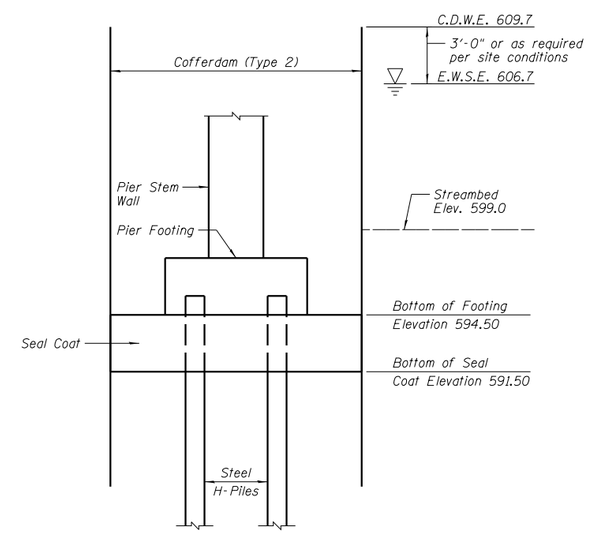

SEAL COAT SCHEMATIC

Farnsworth GROUP, INC.
2709 McGraw Drive
Bloomington, Illinois 61704
309/663-8435, 309/663-1571 fax

	DESIGNED - JML	REVISED
	CHECKED - MSW	REVISED
	DRAWN - DJM	REVISED
DATE - 04/10/14	CHECKED - MSW	REVISED

STATE OF ILLINOIS
DEPARTMENT OF TRANSPORTATION

GENERAL DATA
STRUCTURE NO. 038-0219

SHEET NO. B2 OF 34 SHEETS

F.A.P. RTE.	SECTION	COUNTY	TOTAL SHEETS	SHEET NO.
332	(3)BR	IROQUOIS	100	33

CONTRACT NO. 66736

ILLINOIS FED. AID PROJECT

24-8052

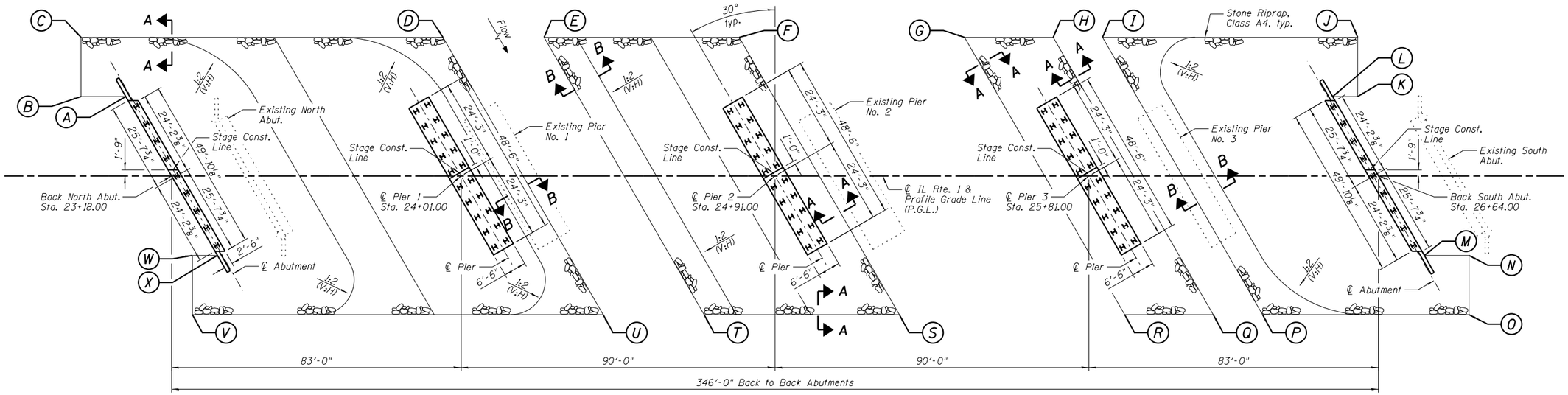

FOOTING LAYOUT PLAN

LEGEND

HP 14x89 Pile

STONE RIPRAP LOCATION

Location	Station	Offset Distance
A	23+05	23' LT.
B	22+92	23' LT.
C	22+92	40' LT.
D	23+96	40' LT.
E	24+25	40' LT.
F	24+81	40' LT.
G	25+45	40' LT.
H	25+71	40' LT.
I	25+85	40' LT.
J	26+58	40' LT.
K	26+58	23' LT.
L	26+51	23' LT.

Location	Station	Offset Distance
M	26+77	23' RT.
N	26+90	23' RT.
O	26+90	40' RT.
P	26+31	40' RT.
Q	26+17	40' RT.
R	25+91	40' RT.
S	25+27	40' RT.
T	24+71	40' RT.
U	24+42	40' RT.
V	23+24	40' RT.
W	23+24	23' RT.
X	23+31	23' RT.

Note: Stations and offsets for Stone Riprap, Class A4 are from the roadway centerline.

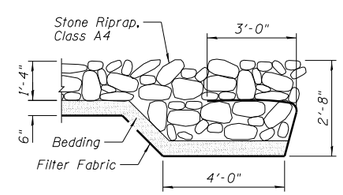

SECTION A-A

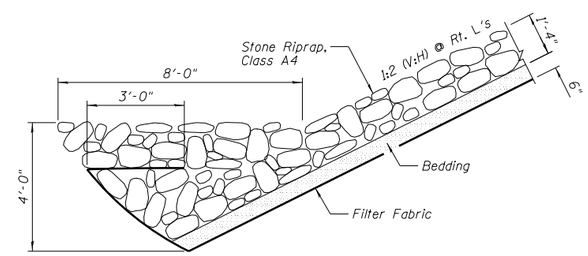

SECTION B-B

Farnsworth GROUP, INC.
2709 McGraw Drive
Bloomington, Illinois 61704
309/663-8435, 309/663-1571 fax

	DESIGNED - JML	REVISED
	CHECKED - MSW	REVISED
	DRAWN - DJM	REVISED
DATE - 04/10/14	CHECKED - MSW	REVISED

STATE OF ILLINOIS
DEPARTMENT OF TRANSPORTATION

FOOTING LAYOUT
STRUCTURE NO. 038-0219

SHEET NO. B3 OF 34 SHEETS

F.A.P. RTE.	SECTION	COUNTY	TOTAL SHEETS	SHEET NO.
332	(3)BR	IROQUOIS	100	34

CONTRACT NO. 66736

ILLINOIS FED. AID PROJECT

24-8052

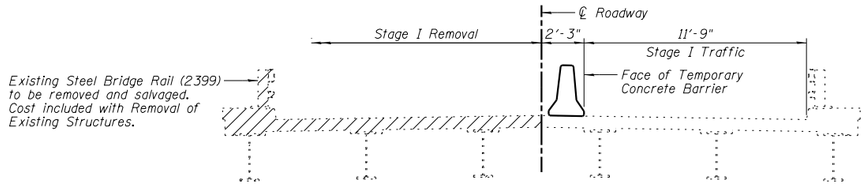

STAGE I REMOVAL

(Looking South @ ℄ of Bridge)

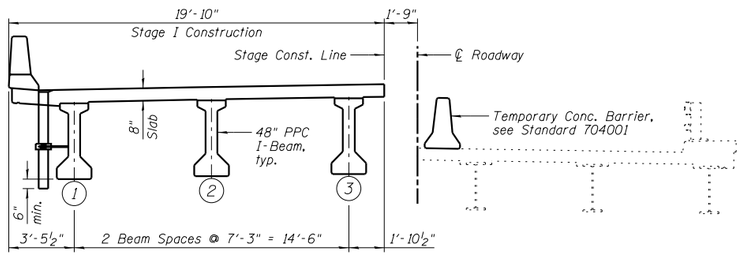

STAGE I CONSTRUCTION

(Looking South @ ℄ of Bridge)

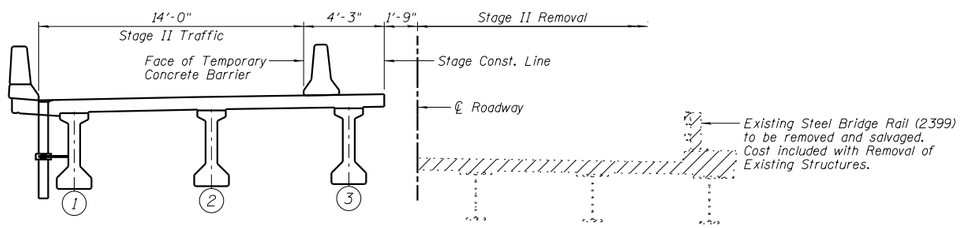

STAGE II REMOVAL

(Looking South @ ℄ of Bridge)

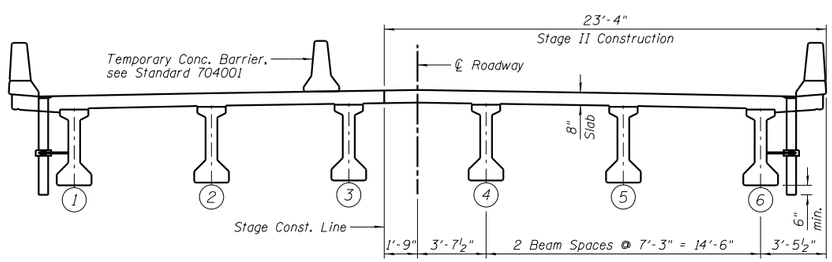

STAGE II CONSTRUCTION

(Looking South @ ℄ of Bridge)

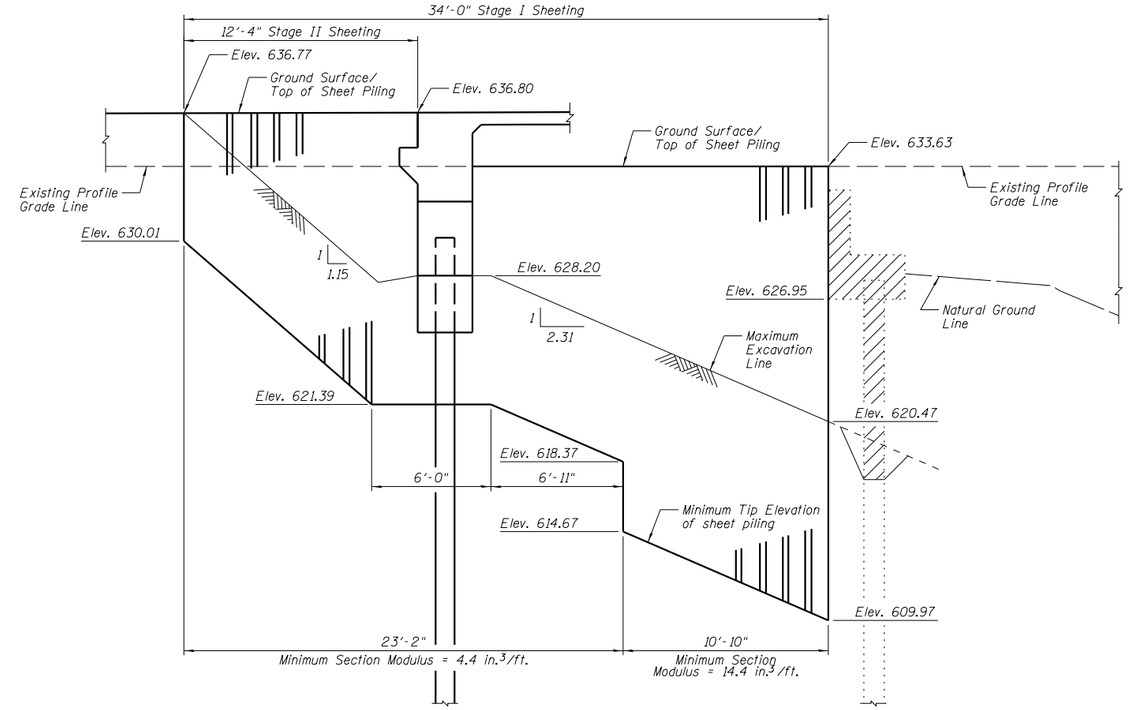

NORTH ABUTMENT TEMPORARY SHEET PILING

Note: If the Contractor chooses to alter the temporary cantilevered sheet piling design requirements shown on the plans, a design submittal including plan details and calculations will be required for review and acceptance by the Engineer.

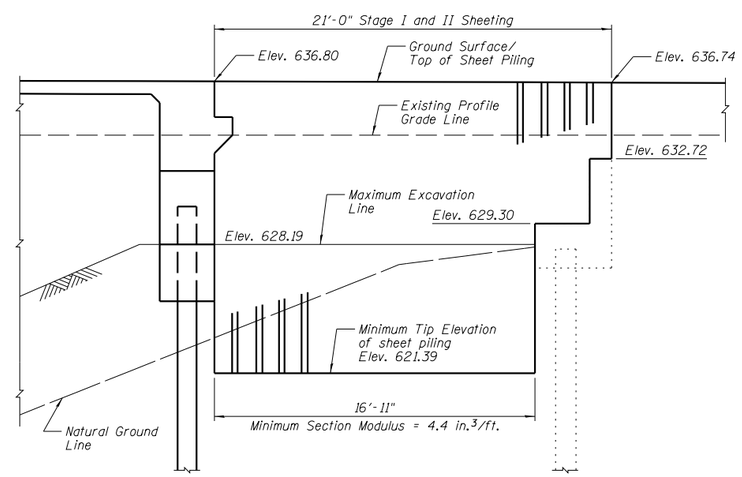

SOUTH ABUTMENT TEMPORARY SHEET PILING

Note: If the Contractor chooses to alter the temporary cantilevered sheet piling design requirements shown on the plans, a design submittal including plan details and calculations will be required for review and acceptance by the Engineer.

BILL OF MATERIAL

Item	Unit	Total
Temporary Sheet Piling	Sq. Ft.	866

NOTES:

1.) Removal of the existing bituminous wearing surface shall be included with Removal of Existing Structures.
2.) See Sheet B5 for Temporary Concrete Barrier (Standard 704001). See roadway plans for quantity.
3.) See Sheets B24-B27 for the Pier Stage Construction Line.

Farnsworth GROUP, INC.
2709 McGraw Drive
Bloomington, Illinois 61704
309/663-8435, 309/663-1571 fax

	DESIGNED - JML	REVISED
	CHECKED - MSW	REVISED
	DRAWN - DJM	REVISED
DATE - 04/10/14	CHECKED - MSW	REVISED

STATE OF ILLINOIS
DEPARTMENT OF TRANSPORTATION

STAGE CONSTRUCTION DETAILS
STRUCTURE NO. 038-0219

SHEET NO. B4 OF 34 SHEETS

F.A.P. RTE.	SECTION	COUNTY	TOTAL SHEETS	SHEET NO.
332	(3)BR	IROQUOIS	100	35

CONTRACT NO. 66736

ILLINOIS FED. AID PROJECT

24-8052

When "A" is 3'-6" or less, the temporary concrete barrier shall be anchored to the new slab according to Detail I or Detail II. No anchorage is required when "A" is greater than 3'-6".

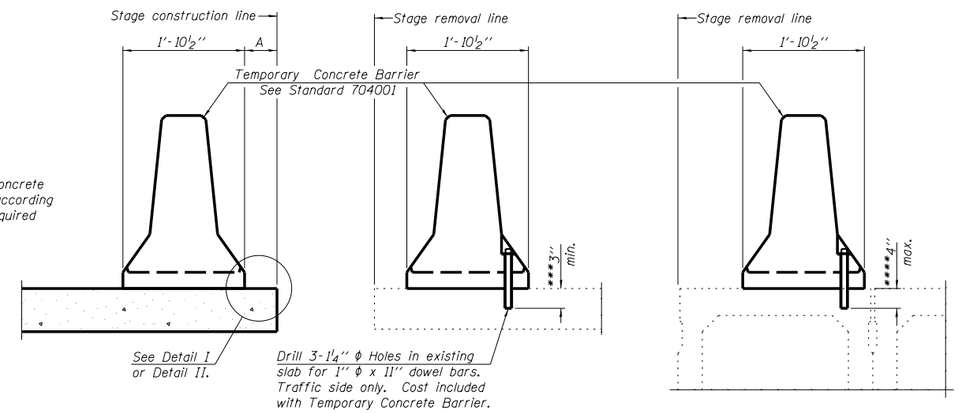

NEW SLAB **EXISTING SLAB** **EXISTING DECK BEAM**

SECTIONS THRU SLAB OR DECK BEAM

NOTES

Detail I - With Bar Splicer or Couplers:
Connect one (1) 1'' x 7'' x "W" steel ℙ to the top layer of couplers with 2-⅝'' ϕ bolts screwed to coupler at approximate ℄ of each barrier panel.

Detail II - With Extended Reinforcement Bars:
Connect one (1) 1'' x 7'' x "W" steel ℙ to the concrete slab or concrete wearing surface with 2-⅝'' ϕ Expansion Anchors or cast in place inserts spaced between the top layer of reinforcement at approximate ℄ of each barrier panel.

Cost of anchorage is included with Temporary Concrete Barrier.

The 1'' x 7'' x "W" plate shall not be removed until stage II construction forms and all reinforcement bars are in place and the concrete is ready to be placed.

*** Dimension shown is minimum required embedment into concrete. If hot-mix asphalt wearing surface is present, minimum embedment shall be in addition to wearing surface depth.

**** If existing deck beam is to remain in place after stage construction, embedment shall only be into wearing surface and not into existing deck beam concrete.

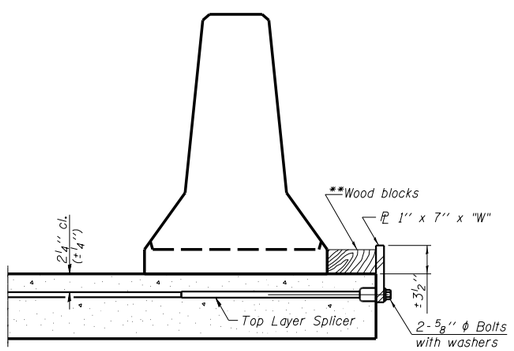

DETAIL I

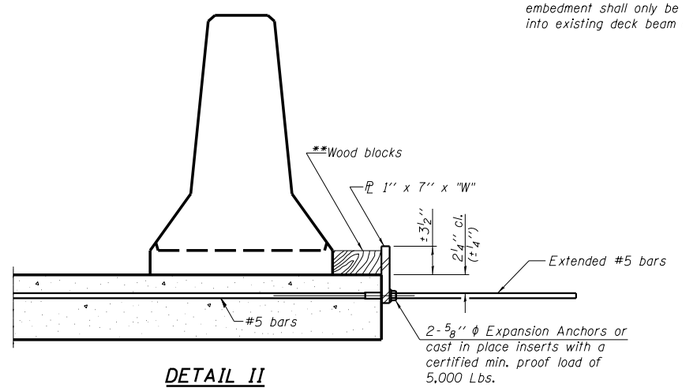

DETAIL II

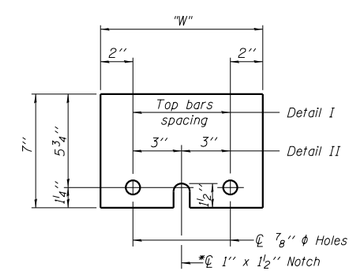

STEEL RETAINER ℙ 1'' x 7'' x "W"

* Required only with Detail II

** Wood blocks may be omitted when required to provide minimum stage traffic lane width. When the wood blocks are omitted, the concrete barrier shall be in direct contact with the steel retainer plate.

"W" = Top bars spacing + 4''

R-27 7-1-10

Farnsworth GROUP, INC. 2709 McGraw Drive Bloomington, Illinois 61704 309/663-8435, 309/663-1571 fax		DESIGNED - JML	REVISED
		CHECKED - MSW	REVISED
		DRAWN - DJM	REVISED
	DATE - 04/10/14	CHECKED - MSW	REVISED

STATE OF ILLINOIS
DEPARTMENT OF TRANSPORTATION

TEMPORARY CONCRETE BARRIER FOR STAGE CONSTRUCTION
STRUCTURE NO. 038-0219

SHEET NO. B5 OF 34 SHEETS

F.A.P. RTE.	SECTION	COUNTY	TOTAL SHEETS	SHEET NO.
332	(3)BR	IROQUOIS	100	36
		CONTRACT NO. 66736		
		ILLINOIS FED. AID PROJECT		

24-8052

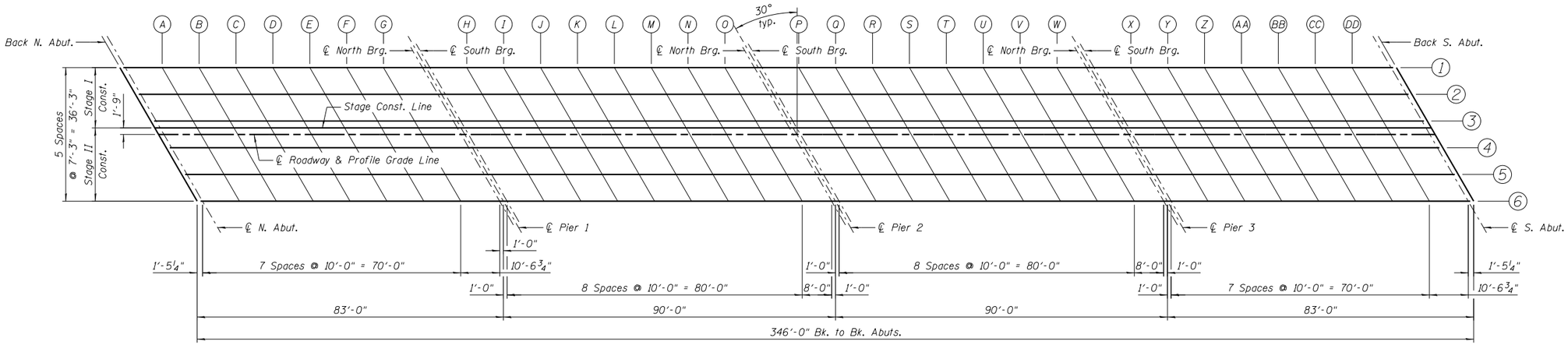

PLAN

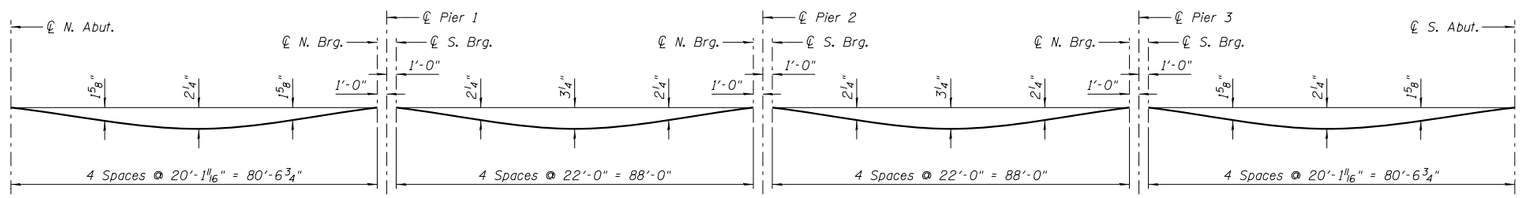

DEAD LOAD DEFLECTION DIAGRAM

(Includes weight of concrete only, excluding beam.)

Note:

The above deflections are not for use in the field if the Engineer is working from the "Theoretical Grade Elevations Adjusted for Dead Load Deflection".

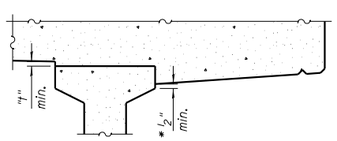

AT MINIMUM FILLET

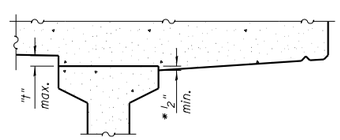

AT MAXIMUM FILLET

To determine "t": After all precast prestressed beams have been erected, elevations of the top flanges of the beams shall be taken at intervals shown above. These elevations subtracted from the "Theoretical Grade Elevations Adjusted for Dead Load Deflections", see "Top of Slab Elevation" sheets, minus slab thickness, equals the fillet heights "t" above top flanges of beams.

FILLET HEIGHTS

*Variable (not less than ½")

Farnsworth GROUP, INC.
2709 McGraw Drive
Bloomington, Illinois 61704
309/663-8435, 309/663-1571 fax

	DESIGNED - JML	REVISED
	CHECKED - MSW	REVISED
	DRAWN - DJM	REVISED
DATE - 04/10/14	CHECKED - MSW	REVISED

STATE OF ILLINOIS
DEPARTMENT OF TRANSPORTATION

TOP OF DECK ELEVATIONS
STRUCTURE NO. 038-0219

SHEET NO. B6 OF 34 SHEETS

F.A.P. RTE.	SECTION	COUNTY	TOTAL SHEETS	SHEET NO.
332	(3)BR	IROQUOIS	100	37

CONTRACT NO. 66736

ILLINOIS FED. AID PROJECT

24-8052

BEAM 1

Location	Station	Offset	Theoretical Grade Elevations	Theoretical Grade Elevations Adjusted for Dead Load Deflection
Bk. of North Abut.	23+07.54	-18.13	636.46	636.46
℄ North Abut.	23+08.97	-18.13	636.46	636.46
A	23+18.97	-18.13	636.49	636.57
B	23+28.97	-18.13	636.52	636.65
C	23+38.97	-18.13	636.54	636.72
D	23+48.97	-18.13	636.57	636.76
E	23+58.97	-18.13	636.59	636.76
F	23+68.97	-18.13	636.61	636.74
G	23+78.97	-18.13	636.63	636.70
℄ North Brg.	23+89.54	-18.13	636.64	636.64
℄ Pier No. 1	23+90.54	-18.13	636.64	636.64
℄ South Brg.	23+91.54	-18.13	636.65	636.65
H	24+01.54	-18.13	636.66	636.75
I	24+11.54	-18.13	636.67	636.84
J	24+21.54	-18.13	636.69	636.91
K	24+31.54	-18.13	636.70	636.96
L	24+41.54	-18.13	636.70	636.96
M	24+51.54	-18.13	636.71	636.94
N	24+61.54	-18.13	636.72	636.88
O	24+71.54	-18.13	636.72	636.81
℄ North Brg.	24+79.54	-18.13	636.72	636.72
℄ Pier No. 2	24+80.54	-18.13	636.72	636.72
℄ South Brg.	24+81.54	-18.13	636.72	636.72
P	24+91.54	-18.13	636.72	636.81
Q	25+01.54	-18.13	636.72	636.89
R	25+11.54	-18.13	636.72	636.95
S	25+21.54	-18.13	636.72	636.98
T	25+31.54	-18.13	636.71	636.97
U	25+41.54	-18.13	636.70	636.93
V	25+51.54	-18.13	636.69	636.86
W	25+61.54	-18.13	636.68	636.77
℄ North Brg.	25+69.54	-18.13	636.67	636.67
℄ Pier No. 3	25+70.54	-18.13	636.67	636.67
℄ South Brg.	25+71.54	-18.13	636.67	636.67
X	25+81.54	-18.13	636.66	636.72
Y	25+91.54	-18.13	636.64	636.77
Z	26+01.54	-18.13	636.63	636.80
AA	26+11.54	-18.13	636.61	636.80
BB	26+21.54	-18.13	636.59	636.77
CC	26+31.54	-18.13	636.57	636.71
DD	26+41.54	-18.13	636.54	636.63
℄ South Abut.	26+52.10	-18.13	636.52	636.52
Bk. of South Abut.	26+53.54	-18.13	636.51	636.51

BEAM 2

Location	Station	Offset	Theoretical Grade Elevations	Theoretical Grade Elevations Adjusted for Dead Load Deflection
Bk. of North Abut.	23+11.72	-10.88	636.62	636.62
℄ North Abut.	23+13.16	-10.88	636.62	636.62
A	23+23.16	-10.88	636.65	636.72
B	23+33.16	-10.88	636.67	636.81
C	23+43.16	-10.88	636.70	636.88
D	23+53.16	-10.88	636.72	636.91
E	23+63.16	-10.88	636.74	636.92
F	23+73.16	-10.88	636.76	636.90
G	23+83.16	-10.88	636.78	636.85
℄ North Brg.	23+93.72	-10.88	636.79	636.79
℄ Pier No. 1	23+94.72	-10.88	636.80	636.80
℄ South Brg.	23+95.72	-10.88	636.80	636.80
H	24+05.72	-10.88	636.81	636.90
I	24+15.72	-10.88	636.82	636.99
J	24+25.72	-10.88	636.84	637.06
K	24+35.72	-10.88	636.84	637.10
L	24+45.72	-10.88	636.85	637.11
M	24+55.72	-10.88	636.86	637.09
N	24+65.72	-10.88	636.86	637.03
O	24+75.72	-10.88	636.87	636.95
℄ North Brg.	24+83.72	-10.88	636.87	636.87
℄ Pier No. 2	24+84.72	-10.88	636.87	636.87
℄ South Brg.	24+85.72	-10.88	636.87	636.87
P	24+95.72	-10.88	636.87	636.95
Q	25+05.72	-10.88	636.87	637.03
R	25+15.72	-10.88	636.86	637.09
S	25+25.72	-10.88	636.86	637.12
T	25+35.72	-10.88	636.85	637.11
U	25+45.72	-10.88	636.84	637.07
V	25+55.72	-10.88	636.83	637.00
W	25+65.72	-10.88	636.82	636.91
℄ North Brg.	25+73.72	-10.88	636.81	636.81
℄ Pier No. 3	25+74.72	-10.88	636.81	636.81
℄ South Brg.	25+75.72	-10.88	636.81	636.81
X	25+85.72	-10.88	636.80	636.86
Y	25+95.72	-10.88	636.78	636.91
Z	26+05.72	-10.88	636.76	636.94
AA	26+15.72	-10.88	636.75	636.94
BB	26+25.72	-10.88	636.72	636.91
CC	26+35.72	-10.88	636.70	636.85
DD	26+45.72	-10.88	636.68	636.76
℄ South Abut.	26+56.28	-10.88	636.65	636.65
Bk. of South Abut.	26+57.72	-10.88	636.65	636.65

BEAM 3

Location	Station	Offset	Theoretical Grade Elevations	Theoretical Grade Elevations Adjusted for Dead Load Deflection
Bk. of North Abut.	23+15.91	-3.63	636.74	636.74
℄ North Abut.	23+17.34	-3.63	636.75	636.75
A	23+27.34	-3.63	636.77	636.85
B	23+37.34	-3.63	636.80	636.93
C	23+47.34	-3.63	636.82	637.00
D	23+57.34	-3.63	636.84	637.04
E	23+67.34	-3.63	636.86	637.04
F	23+77.34	-3.63	636.88	637.02
G	23+87.34	-3.63	636.90	636.97
℄ North Brg.	23+97.91	-3.63	636.91	636.91
℄ Pier No. 1	23+98.91	-3.63	636.92	636.92
℄ South Brg.	23+99.91	-3.63	636.92	636.92
H	24+09.91	-3.63	636.93	637.01
I	24+19.91	-3.63	636.94	637.11
J	24+29.91	-3.63	636.95	637.18
K	24+39.91	-3.63	636.96	637.22
L	24+49.91	-3.63	636.97	637.23
M	24+59.91	-3.63	636.97	637.20
N	24+69.91	-3.63	636.98	637.15
O	24+79.91	-3.63	636.98	637.07
℄ North Brg.	24+87.91	-3.63	636.98	636.98
℄ Pier No. 2	24+88.91	-3.63	636.98	636.98
℄ South Brg.	24+89.91	-3.63	636.98	636.98
P	24+99.91	-3.63	636.98	637.07
Q	25+09.91	-3.63	636.98	637.15
R	25+19.91	-3.63	636.97	637.20
S	25+29.91	-3.63	636.97	637.23
T	25+39.91	-3.63	636.96	637.22
U	25+49.91	-3.63	636.95	637.18
V	25+59.91	-3.63	636.94	637.11
W	25+69.91	-3.63	636.93	637.02
℄ North Brg.	25+77.91	-3.63	636.92	636.92
℄ Pier No. 3	25+78.91	-3.63	636.92	636.92
℄ South Brg.	25+79.91	-3.63	636.92	636.92
X	25+89.91	-3.63	636.90	636.97
Y	25+99.91	-3.63	636.89	637.02
Z	26+09.91	-3.63	636.87	637.04
AA	26+19.91	-3.63	636.85	637.04
BB	26+29.91	-3.63	636.83	637.01
CC	26+39.91	-3.63	636.81	636.95
DD	26+49.91	-3.63	636.78	636.87
℄ South Abut.	26+60.47	-3.63	636.75	636.75
Bk. of South Abut.	26+61.91	-3.63	636.75	636.75

Farnsworth GROUP, INC.
2709 McGraw Drive
Bloomington, Illinois 61704
309/663-8435, 309/663-1571 fax

	DESIGNED - JML	REVISED
	CHECKED - MSW	REVISED
	DRAWN - DJM	REVISED
DATE - 04/10/14	CHECKED - MSW	REVISED

STATE OF ILLINOIS
DEPARTMENT OF TRANSPORTATION

TOP OF DECK ELEVATIONS
STRUCTURE NO. 038-0219

SHEET NO. B7 OF 34 SHEETS

F.A.P. RTE.	SECTION	COUNTY	TOTAL SHEETS	SHEET NO.
332	(3)BR	IROQUOIS	100	38

CONTRACT NO. 66736

ILLINOIS FED. AID PROJECT

24-8052

STAGE CONSTRUCTION LINE

Location	Station	Offset	Theoretical Grade Elevations	Theoretical Grade Elevations Adjusted for Dead Load Deflection
Bk. of North Abut.	23+16.99	-1.75	636.77	636.77
℄ North Abut.	23+18.43	-1.75	636.78	636.78
A	23+28.43	-1.75	636.80	636.88
B	23+38.43	-1.75	636.83	636.97
C	23+48.43	-1.75	636.85	637.03
D	23+58.43	-1.75	636.87	637.07
E	23+68.43	-1.75	636.89	637.07
F	23+78.43	-1.75	636.91	637.05
G	23+88.43	-1.75	636.93	637.01
℄ North Brg.	23+98.99	-1.75	636.95	636.95
℄ Pier No. 1	23+99.99	-1.75	636.95	636.95
℄ South Brg.	24+00.99	-1.75	636.95	636.95
H	24+10.99	-1.75	636.96	637.05
I	24+20.99	-1.75	636.97	637.14
J	24+30.99	-1.75	636.98	637.21
K	24+40.99	-1.75	636.99	637.25
L	24+50.99	-1.75	637.00	637.26
M	24+60.99	-1.75	637.00	637.23
N	24+70.99	-1.75	637.01	637.18
O	24+80.99	-1.75	637.01	637.10
℄ North Brg.	24+88.99	-1.75	637.01	637.01
℄ Pier No. 2	24+89.99	-1.75	637.01	637.01
℄ South Brg.	24+90.99	-1.75	637.01	637.01
P	25+00.99	-1.75	637.01	637.10
Q	25+10.99	-1.75	637.01	637.18
R	25+20.99	-1.75	637.00	637.23
S	25+30.99	-1.75	637.00	637.26
T	25+40.99	-1.75	636.99	637.25
U	25+50.99	-1.75	636.98	637.21
V	25+60.99	-1.75	636.97	637.14
W	25+70.99	-1.75	636.96	637.04
℄ North Brg.	25+78.99	-1.75	636.95	636.95
℄ Pier No. 3	25+79.99	-1.75	636.95	636.95
℄ South Brg.	25+80.99	-1.75	636.95	636.95
X	25+90.99	-1.75	636.93	637.00
Y	26+00.99	-1.75	636.91	637.04
Z	26+10.99	-1.75	636.90	637.07
AA	26+20.99	-1.75	636.88	637.07
BB	26+30.99	-1.75	636.86	637.04
CC	26+40.99	-1.75	636.83	636.98
DD	26+50.99	-1.75	636.81	636.89
℄ South Abut.	26+61.55	-1.75	636.78	636.78
Bk. of South Abut.	26+62.99	-1.75	636.78	636.78

℄ ROADWAY & PROFILE GRADE LINE

Location	Station	Offset	Theoretical Grade Elevations	Theoretical Grade Elevations Adjusted for Dead Load Deflection
Bk. of North Abut.	23+18.00	0.00	636.80	636.80
℄ North Abut.	23+19.44	0.00	636.81	636.81
A	23+29.44	0.00	636.83	636.91
B	23+39.44	0.00	636.86	637.00
C	23+49.44	0.00	636.88	637.06
D	23+59.44	0.00	636.90	637.10
E	23+69.44	0.00	636.92	637.10
F	23+79.44	0.00	636.94	637.08
G	23+89.44	0.00	636.96	637.03
℄ North Brg.	24+00.00	0.00	636.97	636.97
℄ Pier No. 1	24+01.00	0.00	636.98	636.98
℄ South Brg.	24+02.00	0.00	636.98	636.98
H	24+12.00	0.00	636.99	637.07
I	24+22.00	0.00	637.00	637.17
J	24+32.00	0.00	637.01	637.24
K	24+42.00	0.00	637.02	637.28
L	24+52.00	0.00	637.03	637.29
M	24+62.00	0.00	637.03	637.26
N	24+72.00	0.00	637.04	637.20
O	24+82.00	0.00	637.04	637.12
℄ North Brg.	24+90.00	0.00	637.04	637.04
℄ Pier No. 2	24+91.00	0.00	637.04	637.04
℄ South Brg.	24+92.00	0.00	637.04	637.04
P	25+02.00	0.00	637.04	637.12
Q	25+12.00	0.00	637.03	637.20
R	25+22.00	0.00	637.03	637.26
S	25+32.00	0.00	637.02	637.28
T	25+42.00	0.00	637.02	637.28
U	25+52.00	0.00	637.01	637.24
V	25+62.00	0.00	637.00	637.17
W	25+72.00	0.00	636.99	637.07
℄ North Brg.	25+80.00	0.00	636.98	636.98
℄ Pier No. 3	25+81.00	0.00	636.97	636.97
℄ South Brg.	25+82.00	0.00	636.97	636.97
X	25+92.00	0.00	636.96	637.02
Y	26+02.00	0.00	636.94	637.07
Z	26+12.00	0.00	636.92	637.09
AA	26+22.00	0.00	636.90	637.09
BB	26+32.00	0.00	636.88	637.06
CC	26+42.00	0.00	636.86	637.00
DD	26+52.00	0.00	636.83	636.92
℄ South Abut.	26+62.56	0.00	636.81	636.81
Bk. of South Abut.	26+64.00	0.00	636.80	636.80

BEAM 4

Location	Station	Offset	Theoretical Grade Elevations	Theoretical Grade Elevations Adjusted for Dead Load Deflection
Bk. of North Abut.	23+20.09	3.63	636.75	636.75
℄ North Abut.	23+21.53	3.63	636.76	636.76
A	23+31.53	3.63	636.78	636.86
B	23+41.53	3.63	636.81	636.94
C	23+51.53	3.63	636.83	637.01
D	23+61.53	3.63	636.85	637.04
E	23+71.53	3.63	636.87	637.05
F	23+81.53	3.63	636.89	637.02
G	23+91.53	3.63	636.90	636.98
℄ North Brg.	24+02.09	3.63	636.92	636.92
℄ Pier No. 1	24+03.09	3.63	636.92	636.92
℄ South Brg.	24+04.09	3.63	636.92	636.92
H	24+14.09	3.63	636.94	637.02
I	24+24.09	3.63	636.95	637.11
J	24+34.09	3.63	636.96	637.18
K	24+44.09	3.63	636.96	637.22
L	24+54.09	3.63	636.97	637.23
M	24+64.09	3.63	636.98	637.20
N	24+74.09	3.63	636.98	637.15
O	24+84.09	3.63	636.98	637.07
℄ North Brg.	24+92.09	3.63	636.98	636.98
℄ Pier No. 2	24+93.09	3.63	636.98	636.98
℄ South Brg.	24+94.09	3.63	636.98	636.98
P	25+04.09	3.63	636.98	637.07
Q	25+14.09	3.63	636.98	637.15
R	25+24.09	3.63	636.97	637.20
S	25+34.09	3.63	636.97	637.23
T	25+44.09	3.63	636.96	637.22
U	25+54.09	3.63	636.95	637.18
V	25+64.09	3.63	636.94	637.11
W	25+74.09	3.63	636.93	637.01
℄ North Brg.	25+82.09	3.63	636.92	636.92
℄ Pier No. 3	25+83.09	3.63	636.91	636.91
℄ South Brg.	25+84.09	3.63	636.91	636.91
X	25+94.09	3.63	636.90	636.96
Y	26+04.09	3.63	636.88	637.01
Z	26+14.09	3.63	636.86	637.03
AA	26+24.09	3.63	636.84	637.03
BB	26+34.09	3.63	636.82	637.00
CC	26+44.09	3.63	636.80	636.94
DD	26+54.09	3.63	636.77	636.86
℄ South Abut.	26+64.66	3.63	636.74	636.74
Bk. of South Abut.	26+66.09	3.63	636.74	636.74

BEAM 5

Location	Station	Offset	Theoretical Grade Elevations	Theoretical Grade Elevations Adjusted for Dead Load Deflection
Bk. of North Abut.	23+24.28	10.88	636.65	636.65
℄ North Abut.	23+25.72	10.88	636.66	636.66
A	23+35.72	10.88	636.68	636.75
B	23+45.72	10.88	636.70	636.84
C	23+55.72	10.88	636.73	636.90
D	23+65.72	10.88	636.75	636.94
E	23+75.72	10.88	636.76	636.94
F	23+85.72	10.88	636.78	636.92
G	23+95.72	10.88	636.80	636.87
℄ North Brg.	24+06.28	10.88	636.81	636.81
℄ Pier No. 1	24+07.28	10.88	636.81	636.81
℄ South Brg.	24+08.28	10.88	636.82	636.82
H	24+18.28	10.88	636.83	636.91
I	24+28.28	10.88	636.84	637.00
J	24+38.28	10.88	636.85	637.07
K	24+48.28	10.88	636.85	637.11
L	24+58.28	10.88	636.86	637.12
M	24+68.28	10.88	636.86	637.09
N	24+78.28	10.88	636.87	637.04
O	24+88.28	10.88	636.87	636.95
℄ North Brg.	24+96.28	10.88	636.87	636.87
℄ Pier No. 2	24+97.28	10.88	636.87	636.87
℄ South Brg.	24+98.28	10.88	636.87	636.87
P	25+08.28	10.88	636.87	636.95
Q	25+18.28	10.88	636.86	637.03
R	25+28.28	10.88	636.86	637.09
S	25+38.28	10.88	636.85	637.11
T	25+48.28	10.88	636.84	637.10
U	25+58.28	10.88	636.83	637.06
V	25+68.28	10.88	636.82	636.99
W	25+78.28	10.88	636.81	636.89
℄ North Brg.	25+86.28	10.88	636.80	636.80
℄ Pier No. 3	25+87.28	10.88	636.79	636.79
℄ South Brg.	25+88.28	10.88	636.79	636.79
X	25+98.28	10.88	636.78	636.84
Y	26+08.28	10.88	636.76	636.89
Z	26+18.28	10.88	636.74	636.91
AA	26+28.28	10.88	636.72	636.91
BB	26+38.28	10.88	636.70	636.88
CC	26+48.28	10.88	636.67	636.82
DD	26+58.28	10.88	636.65	636.73
℄ South Abut.	26+68.84	10.88	636.62	636.62
Bk. of South Abut.	26+70.28	10.88	636.61	636.61

BEAM 6

Location	Station	Offset	Theoretical Grade Elevations	Theoretical Grade Elevations Adjusted for Dead Load Deflection
Bk. of North Abut.	23+28.46	18.13	636.52	636.52
℄ North Abut.	23+29.90	18.13	636.52	636.52
A	23+39.90	18.13	636.55	636.62
B	23+49.90	18.13	636.57	636.70
C	23+59.90	18.13	636.59	636.77
D	23+69.90	18.13	636.61	636.80
E	23+79.90	18.13	636.63	636.80
F	23+89.90	18.13	636.64	636.78
G	23+99.90	18.13	636.66	636.73
℄ North Brg.	24+10.46	18.13	636.67	636.67
℄ Pier No. 1	24+11.46	18.13	636.67	636.67
℄ South Brg.	24+12.46	18.13	636.68	636.68
H	24+22.46	18.13	636.69	636.77
I	24+32.46	18.13	636.70	636.86
J	24+42.46	18.13	636.71	636.93
K	24+52.46	18.13	636.71	636.97
L	24+62.46	18.13	636.72	636.98
M	24+72.46	18.13	636.72	636.95
N	24+82.46	18.13	636.72	636.89
O	24+92.46	18.13	636.72	636.81
℄ North Brg.	25+00.46	18.13	636.72	636.72
℄ Pier No. 2	25+01.46	18.13	636.72	636.72
℄ South Brg.	25+02.46	18.13	636.72	636.72
P	25+12.46	18.13	636.72	636.80
Q	25+22.46	18.13	636.72	636.88
R	25+32.46	18.13	636.71	636.94
S	25+42.46	18.13	636.70	636.96
T	25+52.46	18.13	636.69	636.95
U	25+62.46	18.13	636.68	636.91
V	25+72.46	18.13	636.67	636.84
W	25+82.46	18.13	636.66	636.74
℄ North Brg.	25+90.46	18.13	636.64	636.64
℄ Pier No. 3	25+91.46	18.13	636.64	636.64
℄ South Brg.	25+92.46	18.13	636.64	636.64
X	26+02.46	18.13	636.62	636.69
Y	26+12.46	18.13	636.61	636.73
Z	26+22.46	18.13	636.59	636.76
AA	26+32.46	18.13	636.56	636.76
BB	26+42.46	18.13	636.54	636.72
CC	26+52.46	18.13	636.52	636.66
DD	26+62.46	18.13	636.49	636.58
℄ South Abut.	26+73.03	18.13	636.46	636.46
Bk. of South Abut.	26+74.46	18.13	636.46	636.46

EAST CURB LINE / EAST FACE OF PARAPET

Location	Station	Offset	Theoretical Grade Elevation
N. End of North Appr.	22+76.21	-20.42	636.32
A	22+86.21	-20.42	636.35
B	22+96.45	-20.00	636.39
S. End of North Appr.	23+06.45	-20.00	636.42

EAST EDGE OF PAVEMENT

Location	Station	Offset	Theoretical Grade Elevation
N. End of North Appr.	22+81.07	-12.00	636.51
A	22+91.07	-12.00	636.54
B	23+01.07	-12.00	636.57
S. End of North Appr.	23+11.07	-12.00	636.60

STAGE CONSTRUCTION LINE

Location	Station	Offset	Theoretical Grade Elevation
N. End of North Appr.	22+86.99	-1.75	636.69
A	22+96.99	-1.75	636.72
B	23+06.99	-1.75	636.75
S. End of North Appr.	23+16.99	-1.75	636.77

℄ ROADWAY & PROFILE GRADE LINE

Location	Station	Offset	Theoretical Grade Elevation
N. End of North Appr.	22+88.00	0.00	636.72
A	22+98.00	0.00	636.75
B	23+08.00	0.00	636.78
S. End of North Appr.	23+18.00	0.00	636.80

WEST EDGE OF PAVEMENT

Location	Station	Offset	Theoretical Grade Elevation
N. End of North Appr.	22+94.93	12.00	636.55
A	23+04.93	12.00	636.58
B	23+14.93	12.00	636.61
S. End of North Appr.	23+24.93	12.00	636.64

WEST CURB LINE / WEST FACE OF PARAPET

Location	Station	Offset	Theoretical Grade Elevation
N. End of North Appr.	22+99.79	20.42	636.39
A	23+09.79	20.42	636.42
B	23+19.55	20.00	636.45
S. End of North Appr.	23+29.55	20.00	636.48

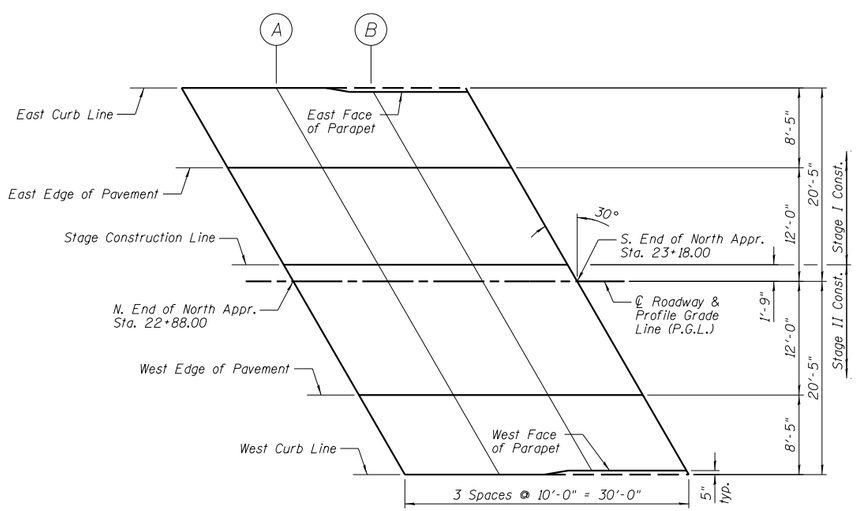

NORTH APPROACH PLAN

EAST CURB LINE / EAST FACE OF PARAPET

Location	Station	Offset	Theoretical Grade Elevation
N. End of South Appr.	26+52.45	-20.00	636.48
A	26+62.45	-20.00	636.45
B	26+72.21	-20.42	636.42
S. End of South Appr.	26+82.21	-20.42	636.39

EAST EDGE OF PAVEMENT

Location	Station	Offset	Theoretical Grade Elevation
N. End of South Appr.	26+57.07	-12.00	636.63
A	26+67.07	-12.00	636.61
B	26+77.07	-12.00	636.58
S. End of South Appr.	26+87.07	-12.00	636.55

STAGE CONSTRUCTION LINE

Location	Station	Offset	Theoretical Grade Elevation
N. End of South Appr.	26+62.99	-1.75	636.78
A	26+72.99	-1.75	636.75
B	26+82.99	-1.75	636.72
S. End of South Appr.	26+92.99	-1.75	636.69

℄ ROADWAY & PROFILE GRADE LINE

Location	Station	Offset	Theoretical Grade Elevation
N. End of South Appr.	26+64.00	0.00	636.80
A	26+74.00	0.00	636.77
B	26+84.00	0.00	636.74
S. End of South Appr.	26+94.00	0.00	636.71

WEST EDGE OF PAVEMENT

Location	Station	Offset	Theoretical Grade Elevation
N. End of South Appr.	26+70.93	12.00	636.60
A	26+80.93	12.00	636.57
B	26+90.93	12.00	636.54
S. End of South Appr.	27+00.93	12.00	636.50

WEST CURB LINE / WEST FACE OF PARAPET

Location	Station	Offset	Theoretical Grade Elevation
N. End of South Appr.	26+75.55	20.00	636.42
A	26+85.55	20.00	636.39
B	26+95.79	20.42	636.34
S. End of South Appr.	27+05.79	20.42	636.31

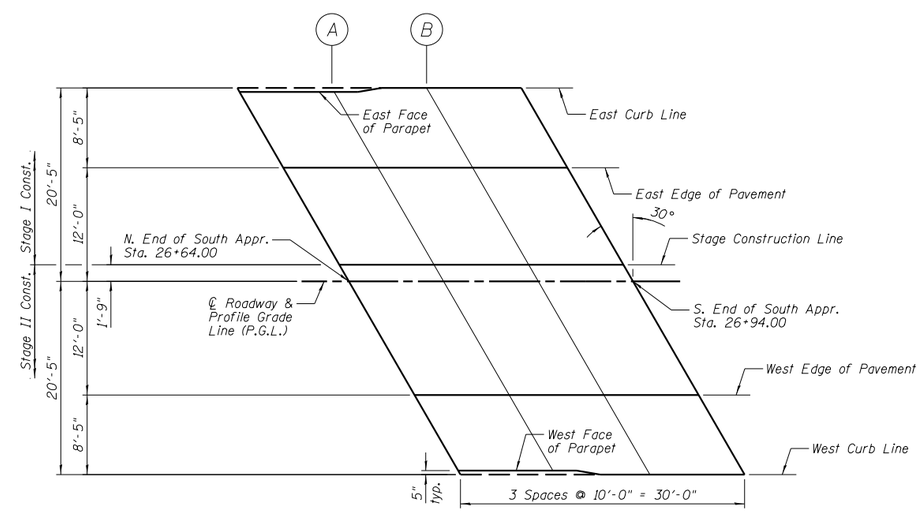

SOUTH APPROACH PLAN

Farnsworth GROUP, INC.
2709 McGraw Drive
Bloomington, Illinois 61704
309/663-8435, 309/663-1571 fax

	DESIGNED - JML	REVISED
	CHECKED - MSW	REVISED
	DRAWN - DJM	REVISED
DATE - 04/10/14	CHECKED - MSW	REVISED

STATE OF ILLINOIS
DEPARTMENT OF TRANSPORTATION

TOP OF APPROACH SLAB ELEVATIONS
STRUCTURE NO. 038-0219

SHEET NO. B10 OF 34 SHEETS

F.A.P. RTE.	SECTION	COUNTY	TOTAL SHEETS	SHEET NO.
332	(3)BR	IROQUOIS	100	41

CONTRACT NO. 66736

ILLINOIS FED. AID PROJECT

24-8052

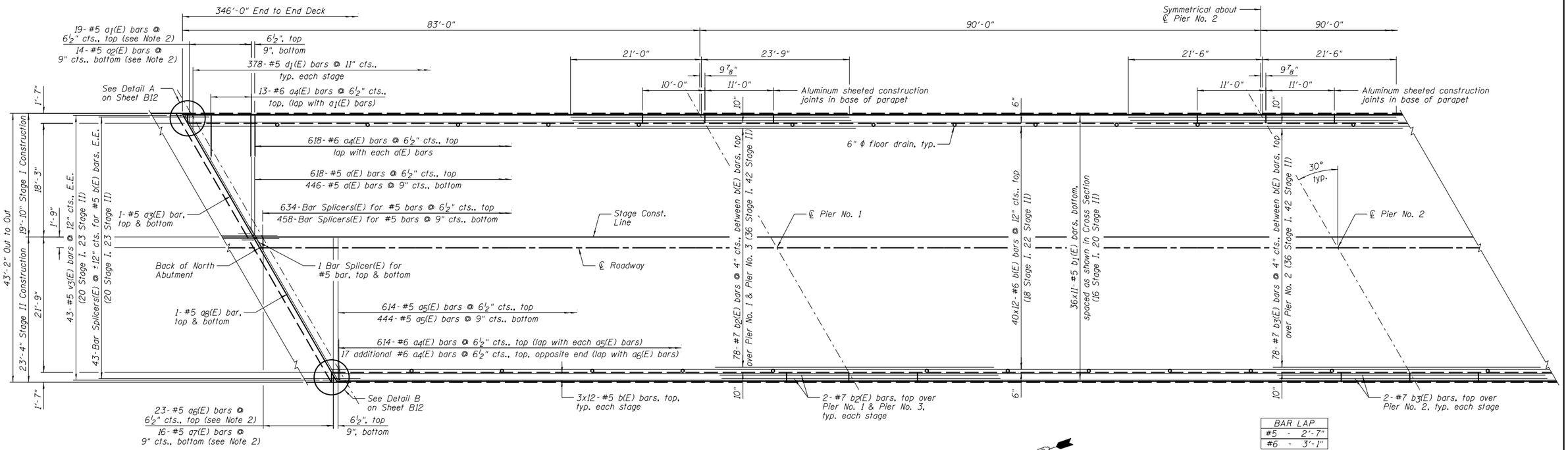

BAR LAP	
#5	2'-7"
#6	3'-1"

HALF PLAN

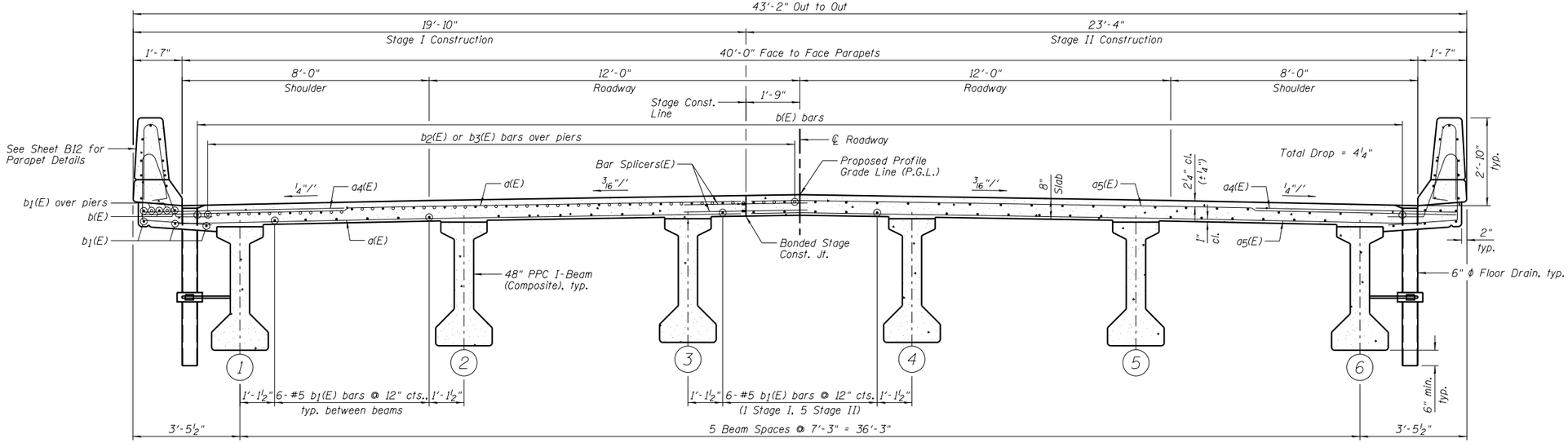

NEAR PIER

NEAR MIDSPAN

CROSS SECTION

(Looking South @ ℄ of Bridge)

NOTES:

1.) See Sheet B12 for Superstructure Details and Bill of Material.
2.) Order $a_1(E)$, $a_2(E)$, $a_6(E)$ & $a_7(E)$ bars full length. Cut according to Bar Cutting Diagram on Sheet B12. Use remainder of bars in opposite end of deck.
3.) Bars indicated thus 3x12-#5 etc. indicates 3 lines of bars with 12 lengths per line.
4.) E.E. denotes Each End.
5.) See Sheet B29 for Bar Splicer Details.

Farnsworth GROUP, INC.
2709 McGraw Drive
Bloomington, Illinois 61704
309/663-8435, 309/663-1571 fax

	DESIGNED - JML	REVISED
	CHECKED - MSW	REVISED
	DRAWN - DJM	REVISED
DATE - 04/10/14	CHECKED - MSW	REVISED

STATE OF ILLINOIS
DEPARTMENT OF TRANSPORTATION

SUPERSTRUCTURE
STRUCTURE NO. 038-0219

SHEET NO. B11 OF 34 SHEETS

F.A.P. RTE.	SECTION	COUNTY	TOTAL SHEETS	SHEET NO.
332	(3)BR	IROQUOIS	100	42
		CONTRACT NO. 66736		
	ILLINOIS	FED. AID PROJECT		

24-8052

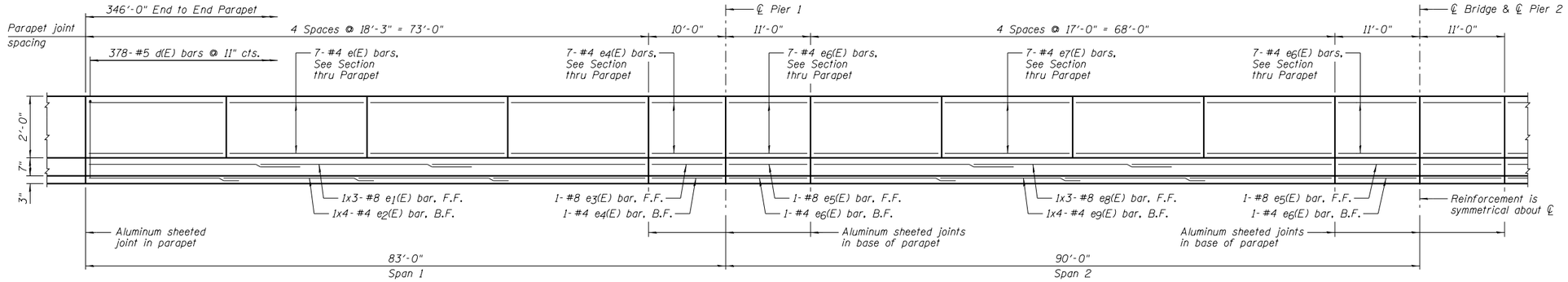

INSIDE ELEVATION OF PARAPET

BAR LAP	
#4	2'-0"
#8	5'-2"

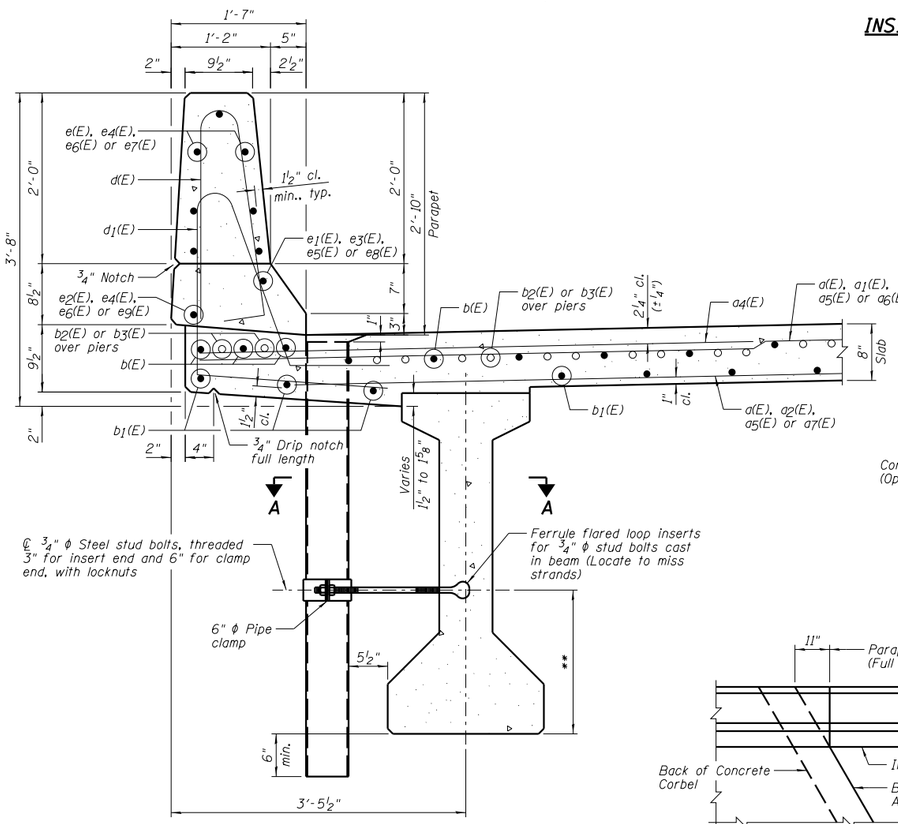

SECTION THRU PARAPET

**For insert locations, see Sheets B19 and B20.

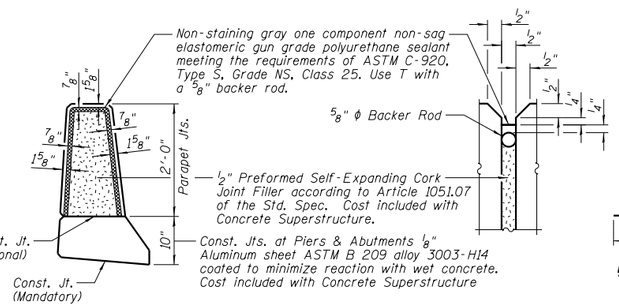

PARAPET JOINT DETAILS

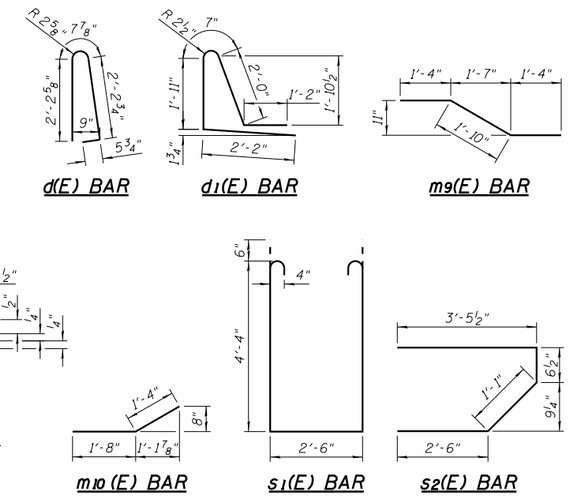

SUPERSTRUCTURE BILL OF MATERIAL

Bar	No.	Size	Length	Shape
a(E)	1064	#5	19'-4"	
a1(E)	19	#5	20'-3"	
a2(E)	14	#5	19'-7"	
a3(E)	4	#5	22'-4"	
a4(E)	1262	#6	6'-6"	
a5(E)	1058	#5	22'-10"	
a6(E)	23	#5	24'-6"	
a7(E)	16	#5	24'-0"	
a8(E)	4	#5	26'-5"	
b(E)	552	#6	31'-2"	
b1(E)	396	#5	33'-9"	
b2(E)	164	#7	44'-9"	
b3(E)	82	#7	43'-0"	
d(E)	756	#5	5'-7"	
d1(E)	756	#5	7'-10"	
e(E)	112	#4	17'-11"	
e1(E)	12	#8	27'-8"	
e2(E)	16	#4	19'-8"	
e3(E)	4	#8	9'-8"	
e4(E)	32	#4	9'-8"	
e5(E)	8	#8	10'-8"	
e6(E)	64	#4	10'-8"	
e7(E)	112	#4	16'-8"	
e8(E)	12	#8	26'-0"	
e9(E)	16	#4	18'-5"	
m(E)	10	#6	22'-6"	
m1(E)	10	#6	26'-7"	
m2(E)	12	#6	9'-9"	
m3(E)	12	#6	11'-1"	
m4(E)	32	#6	5'-11"	
m5(E)	8	#6	4'-10"	
m6(E)	4	#6	2'-7"	
m7(E)	48	#4	7'-4"	
m8(E)	12	#4	5'-6"	
m9(E)	12	#8	4'-6"	
m10(E)	6	#8	3'-0"	
s1(E)	72	#4	12'-2"	
s2(E)	86	#5	7'-7"	
s5(E)	90	#4	12'-5"	
v3(E)	86	#5	3'-10"	

Item	Unit	Quantity
Concrete Superstructure	Cu. Yd.	546.4
Bridge Deck Grooving	Sq. Yd.	1461
Protective Coat	Sq. Yd.	1828
Reinforcement Bars, Epoxy Coated	Pound	143,420

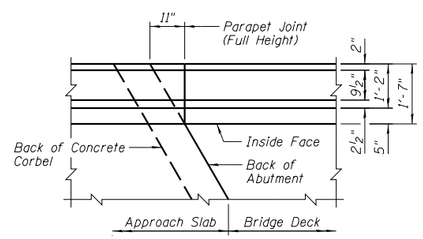

DETAIL A

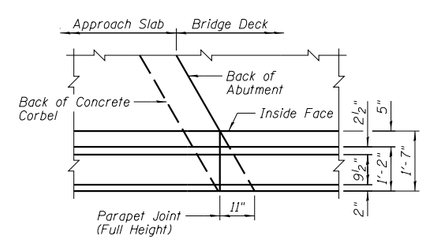

DETAIL B

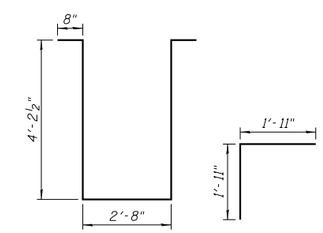

s5(E) BAR v3(E) BAR

BAR CUTTING DIAGRAM

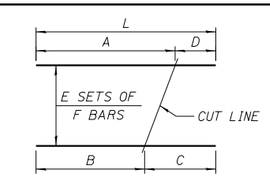

BAR	A	B	C	D	E	F	L
a1(E)	18'-7"	1'-8"	18'-7"	1'-8"	1	19	20'-3"
a2(E)	18'-3"	1'-4"	18'-3"	1'-4"	1	14	19'-7"
a6(E)	22'-1"	2'-5"	22'-1"	2'-5"	1	23	24'-6"
a7(E)	21'-9"	2'-3"	21'-9"	2'-3"	1	16	24'-0"

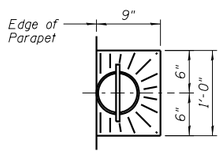

TOP PLAN

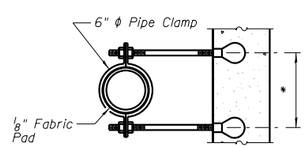

SECTION A-A

*Dimension as required by Pipe Clamp.

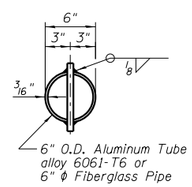

TOP PLAN

(Showing Aluminum Tube)

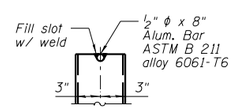

ALUMINUM TUBE

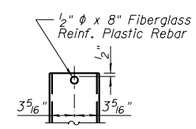

FIBERGLASS PIPE

Notes:
Fiberglass pipe shall conform to ASTM D2996, with short-time rupture strength hoop tensile stress of 30,000 p.s.i. minimum.
The exterior surfaces of the floor drains shall be coated or pigmented by the manufacturer with a color that matches the concrete.
The clamping device and inserts shall be galvanized according to AASHTO M 232. Cost of clamping device and galvanizing included with Floor Drains.

NOTES:

1.) Bars indicated thus 1x3-#5 etc. indicates 1 line of bars with 3 lengths per line.
2.) Inside Elevation of Parapet view is exaggerated vertically to show reinforcement.
3.) B.F. denotes Back Face and F.F. denotes Front Face.
4.) For location of Detail A and Detail B, see Sheet B11.
5.) See Sheet B29 for Bar Splicer Details.

Farnsworth GROUP, INC.
2709 McGraw Drive
Bloomington, Illinois 61704
309/663-8435, 309/663-1571 fax

	DESIGNED - JML	REVISED
	CHECKED - MSW	REVISED
	DRAWN - DJM	REVISED
DATE - 04/10/14	CHECKED - MSW	REVISED

STATE OF ILLINOIS
DEPARTMENT OF TRANSPORTATION

SUPERSTRUCTURE DETAILS
STRUCTURE NO. 038-0219

SHEET NO. B12 OF 34 SHEETS

F.A.P. RTE.	SECTION	COUNTY	TOTAL SHEETS	SHEET NO.
332	(3)BR	IROQUOIS	100	43

CONTRACT NO. 66736

ILLINOIS FED. AID PROJECT

24-8052

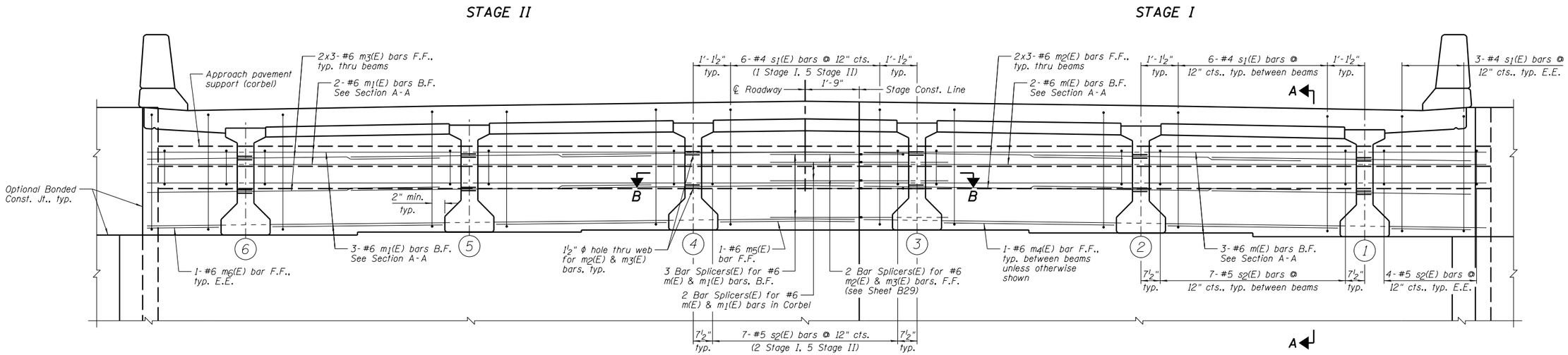

BAR LAP
#6 - 3'-4"

ELEVATION OF DIAPHRAGM AT NORTH ABUTMENT

(Looking North)

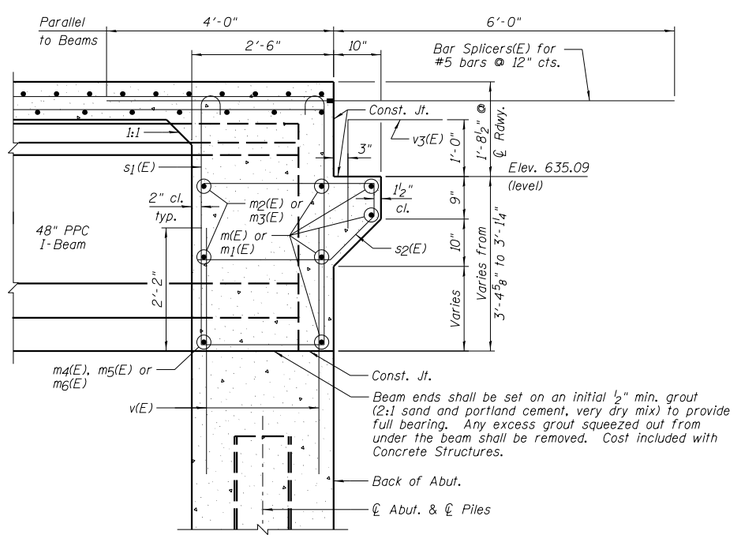

SECTION A-A

(Dimensions at right angles to abutment, except as shown)

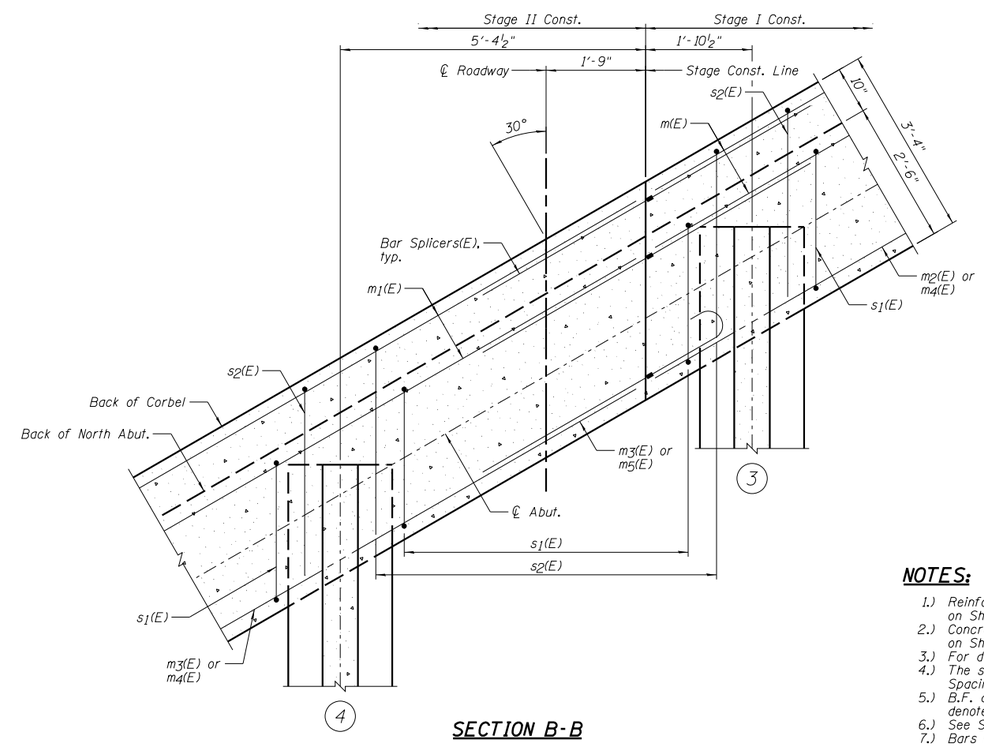

SECTION B-B

NOTES:

1.) Reinforcement bars in diaphragm are billed with Superstructure on Sheet B12.
2.) Concrete in diaphragm is included with Concrete Superstructure on Sheet B12.
3.) For details of bars s1(E), s2(E) and v3(E), see Sheet B12.
4.) The s1(E) and s2(E) bars shall be placed parallel to the beams. Spacing for these bars shall be at right angles to the beams.
5.) B.F. denotes Back Face, F.F. denotes Front Face and E.E. denotes Each End.
6.) See Sheet B29 for Bar Splicer Details.
7.) Bars indicated thus 2x3-#6 indicates 2 lines of bars with 3 lengths per line.

Farnsworth GROUP, INC.
2709 McGraw Drive
Bloomington, Illinois 61704
309/663-8435, 309/663-1571 fax

	DESIGNED - JML	REVISED
	CHECKED - MSW	REVISED
	DRAWN - DJM	REVISED
DATE - 04/10/14	CHECKED - MSW	REVISED

STATE OF ILLINOIS
DEPARTMENT OF TRANSPORTATION

DIAPHRAGM DETAILS - NORTH ABUTMENT
STRUCTURE NO. 038-0219

SHEET NO. B13 OF 34 SHEETS

F.A.P. RTE.	SECTION	COUNTY	TOTAL SHEETS	SHEET NO.
332	(3)BR	IROQUOIS	100	44

CONTRACT NO. 66736

ILLINOIS FED. AID PROJECT

24-8052

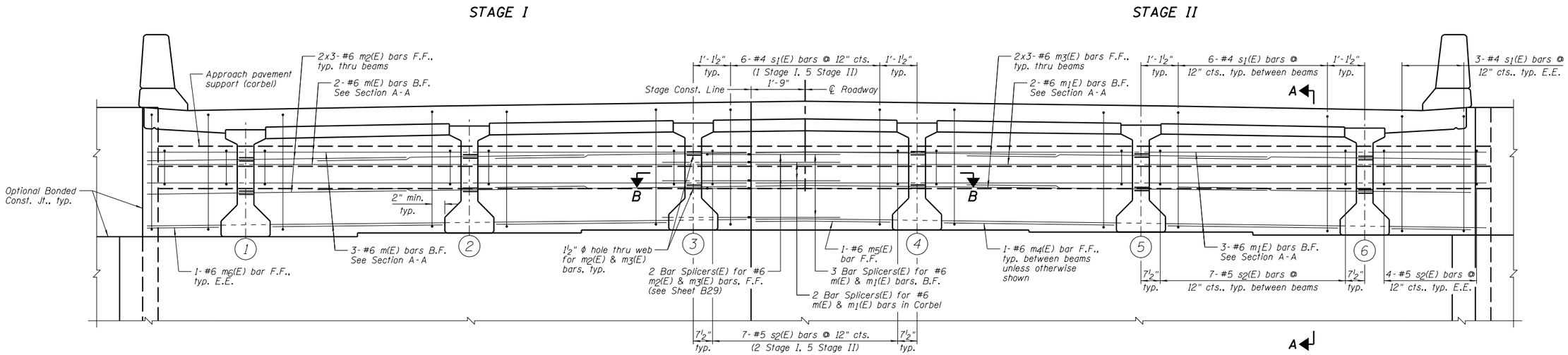

BAR LAP
#6 - 3'-4"

ELEVATION OF DIAPHRAGM AT SOUTH ABUTMENT

(Looking South)

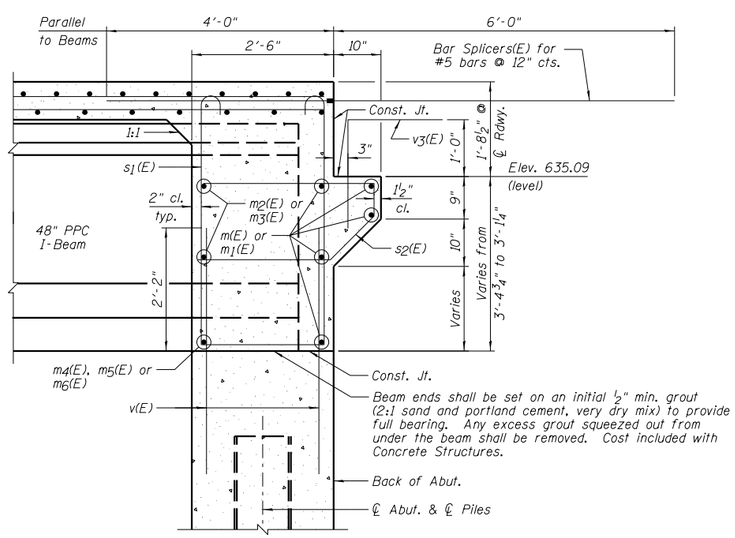

SECTION A-A

(Dimensions at right angles to abutment, except as shown)

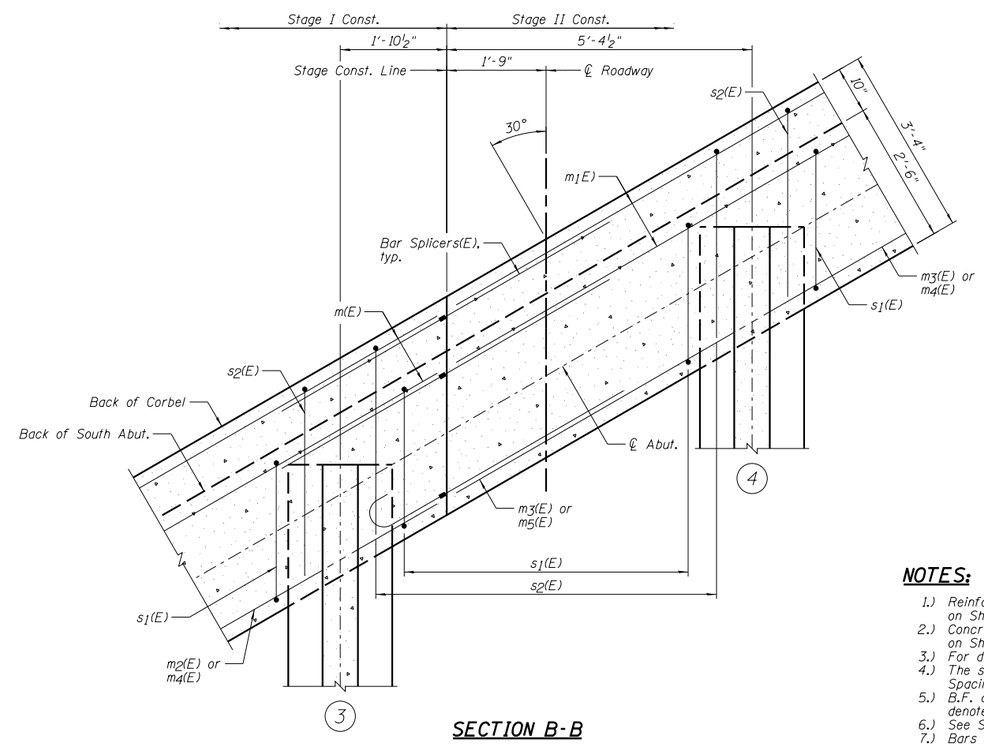

SECTION B-B

NOTES:

1.) Reinforcement bars in diaphragm are billed with Superstructure on Sheet B12.
2.) Concrete in diaphragm is included with Concrete Superstructure on Sheet B12.
3.) For details of bars s1(E), s2(E) and v3(E), see Sheet B12.
4.) The s1(E) and s2(E) bars shall be placed parallel to the beams. Spacing for these bars shall be at right angles to the beams.
5.) B.F. denotes Back Face, F.F. denotes Front Face and E.E. denotes Each End.
6.) See Sheet B29 for Bar Splicer Details.
7.) Bars indicated thus 2x3-#6 indicates 2 lines of bars with 3 lengths per line.

Farnsworth GROUP, INC.
2709 McGraw Drive
Bloomington, Illinois 61704
309/663-8435, 309/663-1571 fax

	DESIGNED - JML	REVISED
	CHECKED - MSW	REVISED
	DRAWN - DJM	REVISED
DATE - 04/10/14	CHECKED - MSW	REVISED

STATE OF ILLINOIS
DEPARTMENT OF TRANSPORTATION

DIAPHRAGM DETAILS – SOUTH ABUTMENT
STRUCTURE NO. 038-0219

SHEET NO. B14 OF 34 SHEETS

F.A.P. RTE.	SECTION	COUNTY	TOTAL SHEETS	SHEET NO.
332	(3)BR	IROQUOIS	100	45

CONTRACT NO. 66736

ILLINOIS FED. AID PROJECT

24-8052

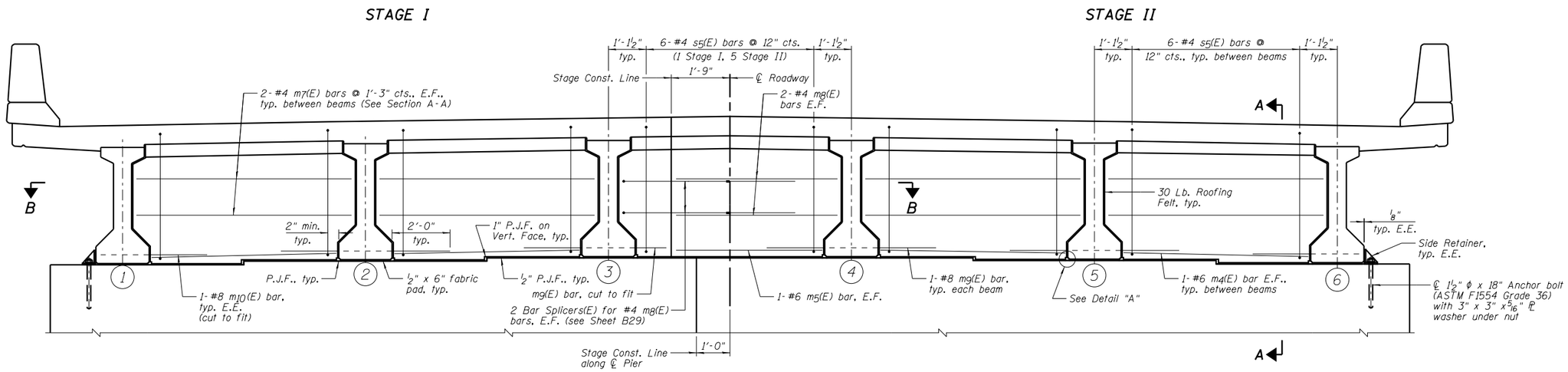

ELEVATION OF DIAPHRAGM AT PIER

(Looking South)

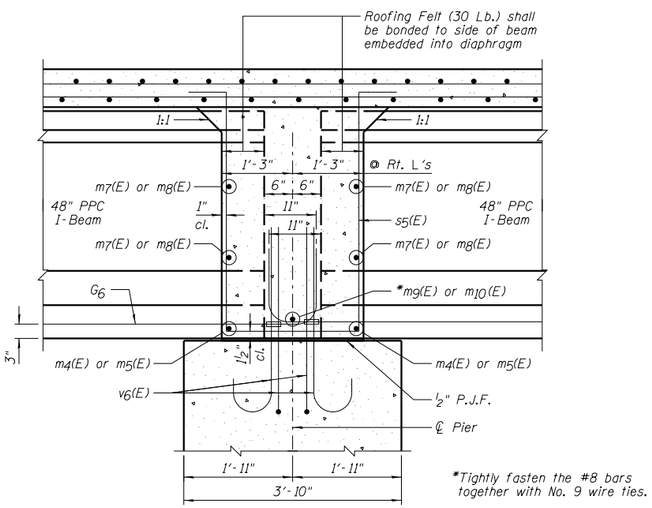

*Tightly fasten the #8 bars together with No. 9 wire ties.

SECTION A-A

(Dimensions at right angles to pier, except as shown)

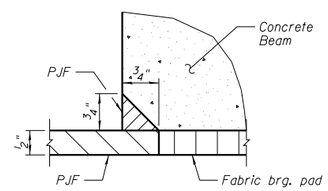

DETAIL "A"

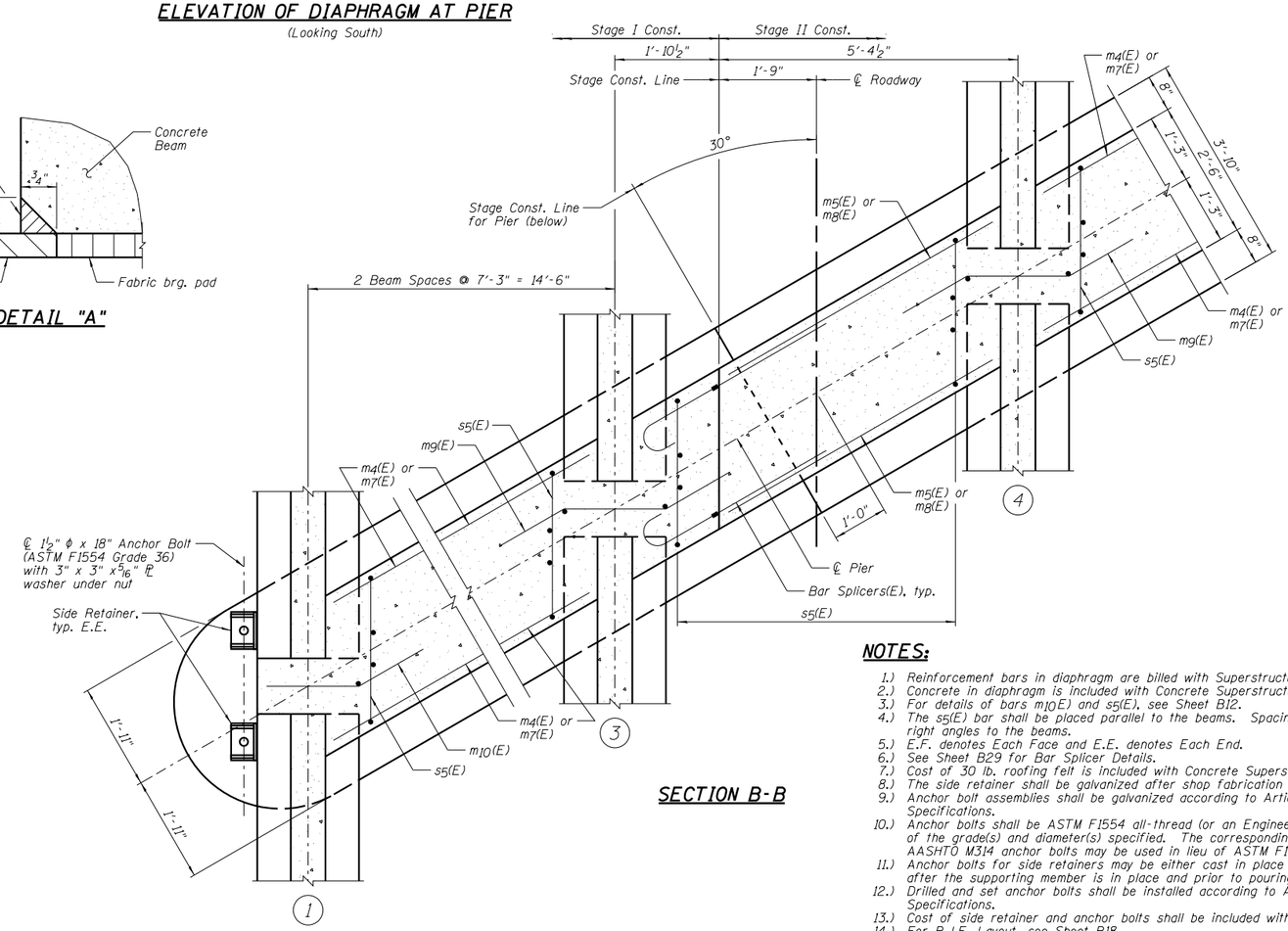

SECTION B-B

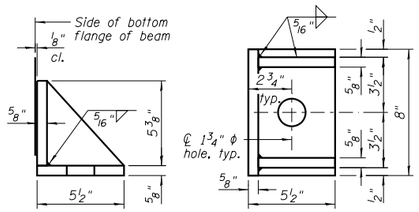

SIDE RETAINER

(2 required each side of pier).
Equivalent rolled angle with stiffeners will be allowed in lieu of welded plates.

NOTES:

1.) Reinforcement bars in diaphragm are billed with Superstructure on Sheet B12.
2.) Concrete in diaphragm is included with Concrete Superstructure on Sheet B12.
3.) For details of bars m10(E) and s5(E), see Sheet B12.
4.) The s5(E) bar shall be placed parallel to the beams. Spacing for this bar shall be at right angles to the beams.
5.) E.F. denotes Each Face and E.E. denotes Each End.
6.) See Sheet B29 for Bar Splicer Details.
7.) Cost of 30 lb. roofing felt is included with Concrete Superstructure.
8.) The side retainer shall be galvanized after shop fabrication according to AASHTO M 111.
9.) Anchor bolt assemblies shall be galvanized according to Article 1006.09 of the Standard Specifications.
10.) Anchor bolts shall be ASTM F1554 all-thread (or an Engineer-approved alternate material) of the grade(s) and diameter(s) specified. The corresponding specified grade of AASHTO M314 anchor bolts may be used in lieu of ASTM F1554.
11.) Anchor bolts for side retainers may be either cast in place or installed in holes drilled after the supporting member is in place and prior to pouring the deck.
12.) Drilled and set anchor bolts shall be installed according to Article 521.06 of the Standard Specifications.
13.) Cost of side retainer and anchor bolts shall be included with Concrete Structures.
14.) For P.J.F. Layout, see Sheet B18.
15.) For Anchor Bolt Layout, see Sheet B27.

Farnsworth GROUP, INC.
2709 McGraw Drive
Bloomington, Illinois 61704
309/663-8435, 309/663-1571 fax

	DESIGNED - JML	REVISED
	CHECKED - MSW	REVISED
	DRAWN - DJM	REVISED
DATE - 04/10/14	CHECKED - MSW	REVISED

STATE OF ILLINOIS
DEPARTMENT OF TRANSPORTATION

DIAPHRAGM DETAILS – PIERS
STRUCTURE NO. 038–0219

SHEET NO. B15 OF 34 SHEETS

F.A.P. RTE.	SECTION	COUNTY	TOTAL SHEETS	SHEET NO.
332	(3)BR	IROQUOIS	100	46

CONTRACT NO. 66736

ILLINOIS FED. AID PROJECT

24-8052

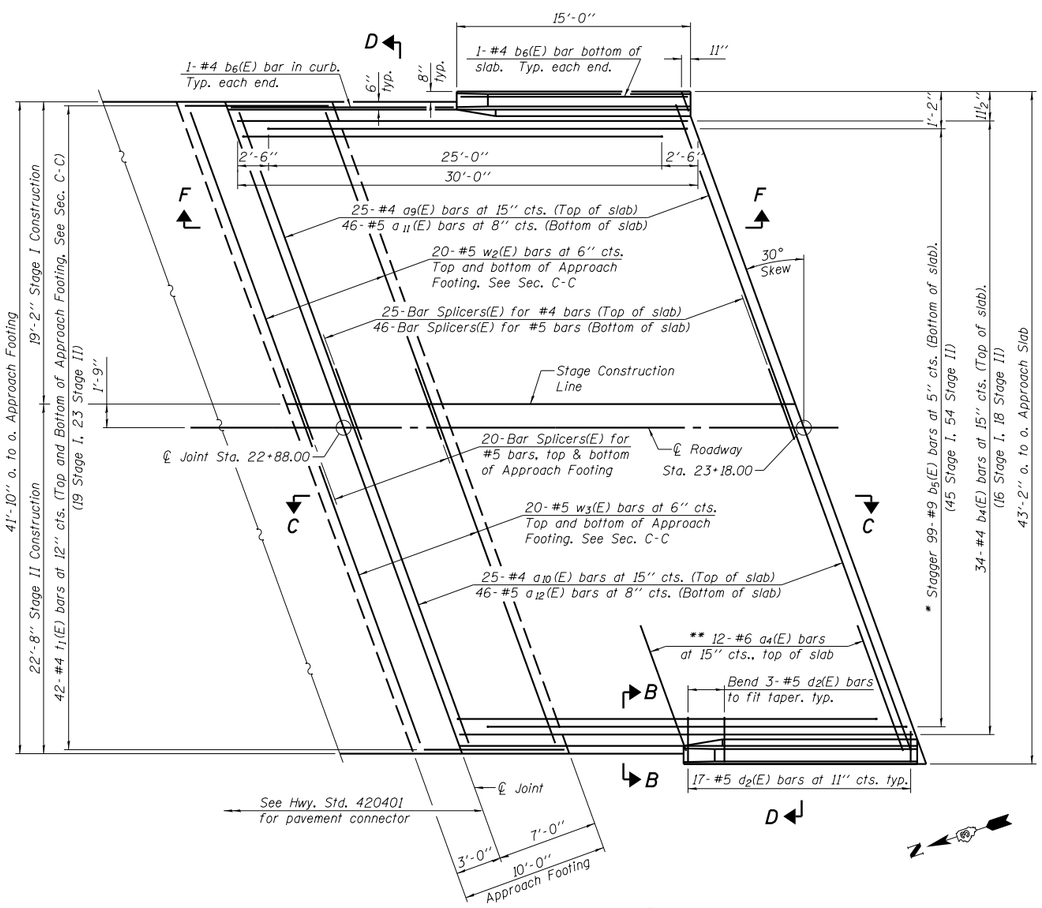

PLAN

* Tilt #9 b_5(E) bars as required to maintain clearance.
** Space between a_9(E) and a_{10}(E) bars, typ. each parapet.

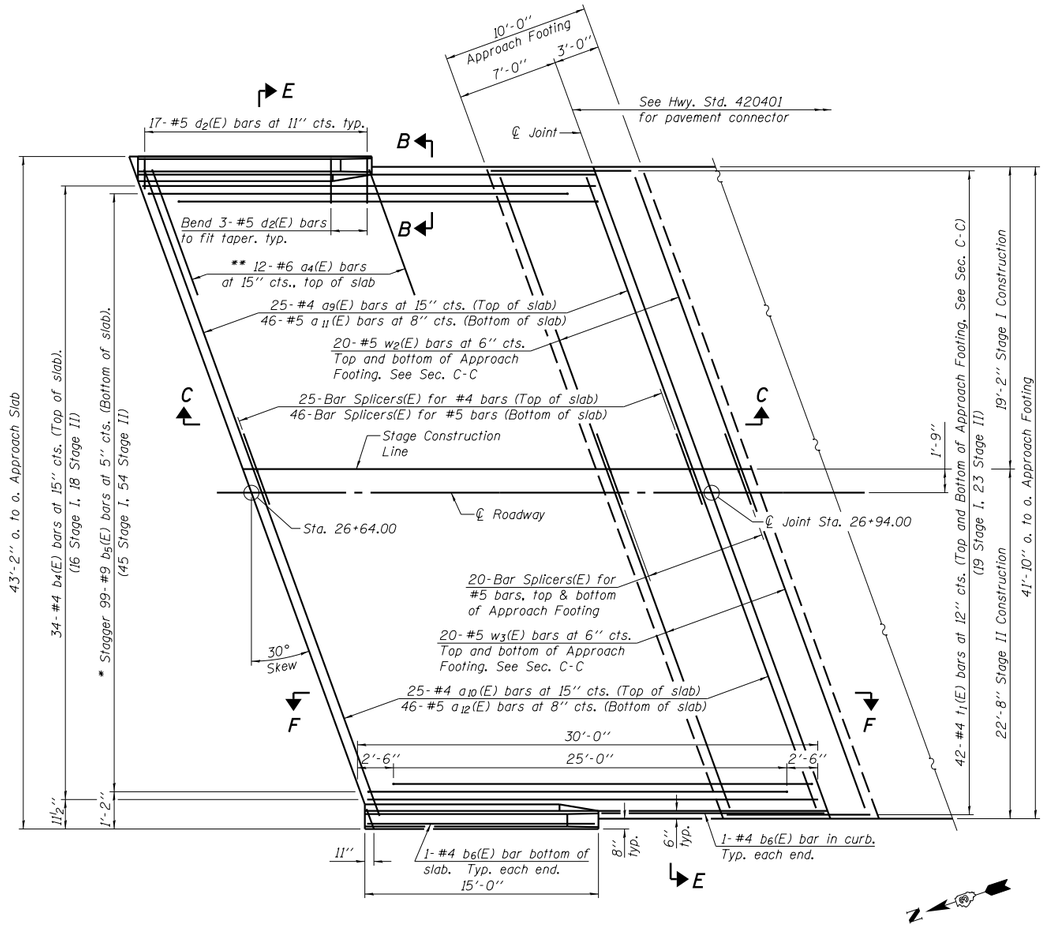

PLAN

* Tilt #9 b_5(E) bars as required to maintain clearance.
** Space between a_9(E) and a_{10}(E) bars, typ. each parapet.

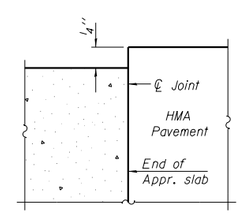

FLEXIBLE PAVEMENT

DETAIL A

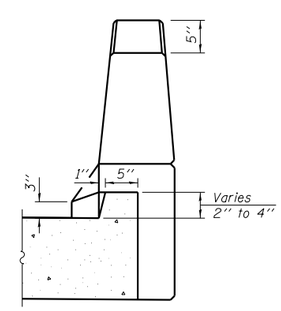

VIEW B-B

Notes:
See Sheet B17 for Sections C-C, D-D & E-E and View F-F.
a_9(E) thru a_{12}(E) bar spacings measured along ℄ Rdwy.
See Sheet B29 for Bar Splicer Details.

Farnsworth GROUP, INC.
2709 McGraw Drive
Bloomington, Illinois 61704
309/663-8435, 309/663-1571 fax

	DESIGNED - JML	REVISED
	CHECKED - MSW	REVISED
	DRAWN - DJM	REVISED
DATE - 04/10/14	CHECKED - MSW	REVISED

STATE OF ILLINOIS
DEPARTMENT OF TRANSPORTATION

BRIDGE APPROACH SLAB DETAILS
STRUCTURE NO. 038-0219

SHEET NO. B16 OF 34 SHEETS

F.A.P. RTE.	SECTION	COUNTY	TOTAL SHEETS	SHEET NO.
332	(3)BR	IROQUOIS	100	47
		CONTRACT NO. 66736		
	ILLINOIS FED. AID PROJECT			

24-8052

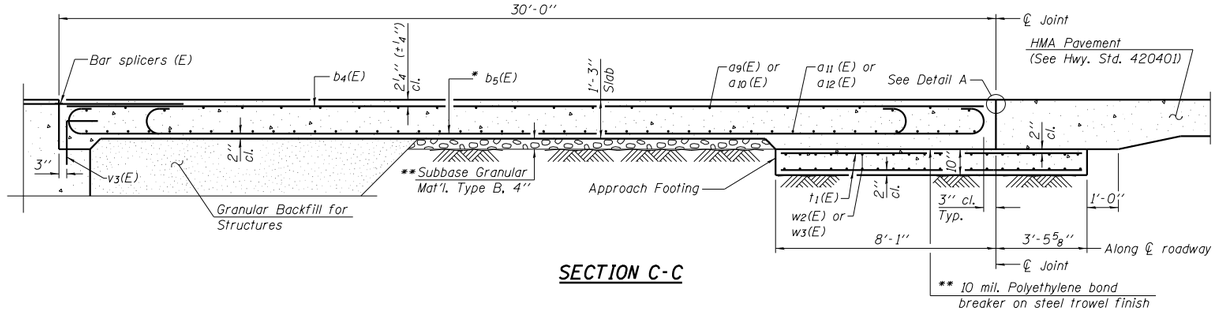

SECTION C-C

Notes:
- See sheet B16 for Detail A and View B-B.
- Approach slab and parapet concrete shall be paid for as Concrete Superstructure.
- Approach footing concrete shall be paid for as Concrete Structures.
- Reinforcement shall be paid for as Reinforcement Bars, Epoxy Coated.
- For v3(E) bar details, see Sheet B12.
- The approach footing maximum applied service bearing pressure (Qmax) = 2.0 ksf.
- For bar splicer details, see sheet B29.
- Cost of excavation for approach footing included with Concrete Structures.
- For Granular Backfill for Structures and drainage treatment details, see sheet B2.
- For additional parapet details, see sheet B12.

* Tilt #9 b5(E) bars as required to maintain clearance.

** Cost included with Concrete Superstructure.

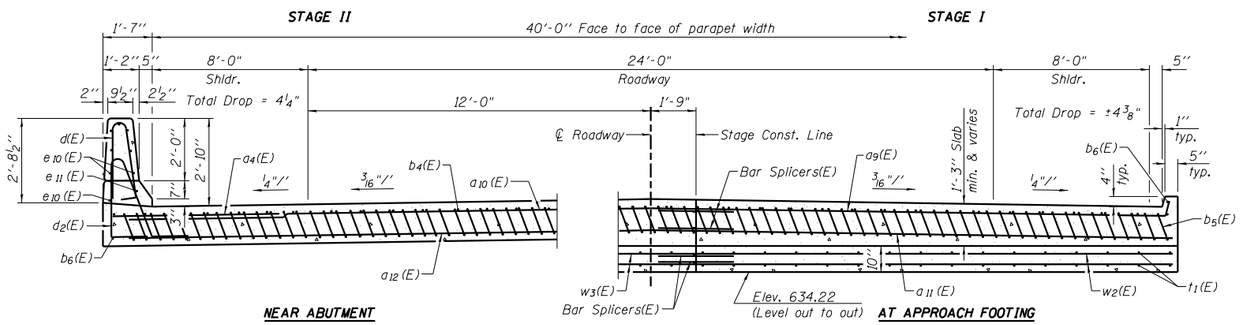

SECTION D-D

(See Plan for dimensions not shown)

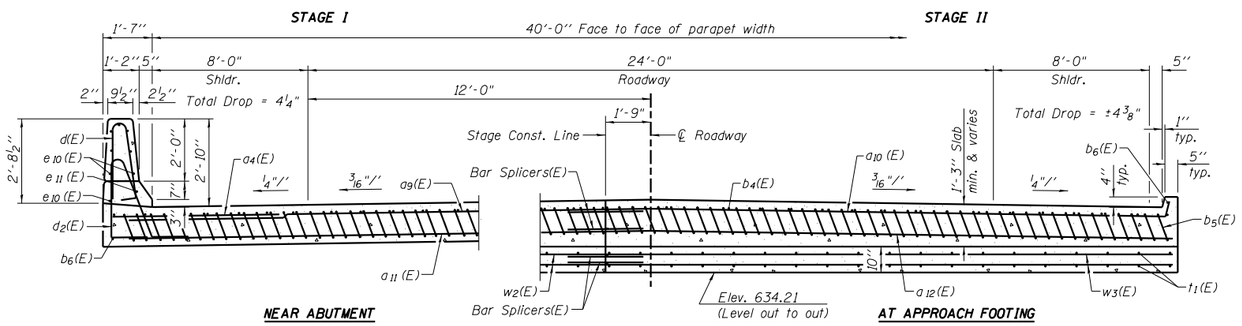

SECTION E-E

(See Plan for dimensions not shown)

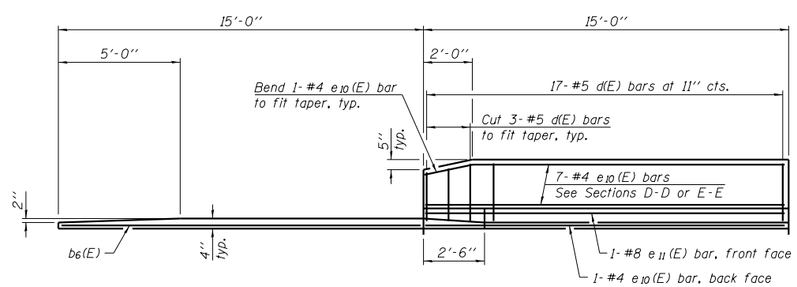

VIEW F-F

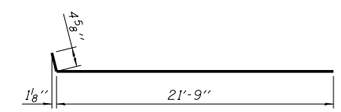

BAR a9(E)

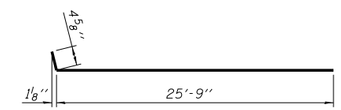

BAR a10(E)

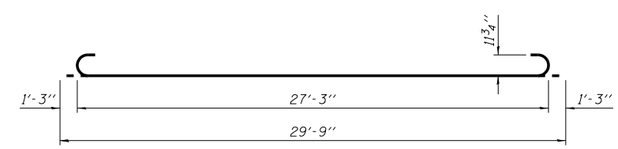

BAR b5(E)

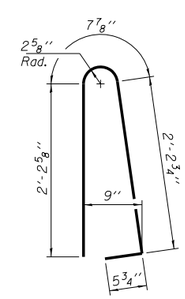

BAR d(E)

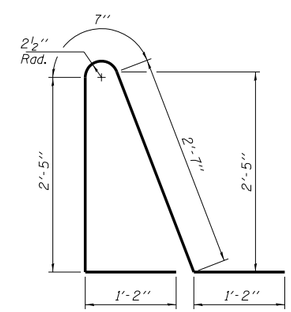

BAR d2(E)

TWO APPROACHES BILL OF MATERIAL

Bar	No.	Size	Length	Shape
a4(E)	48	#6	6'-6"	
a9(E)	50	#4	22'-2"	
a10(E)	50	#4	26'-2"	
a11(E)	92	#5	21'-7"	
a12(E)	92	#5	25'-8"	
b4(E)	68	#4	29'-8"	
b5(E)	198	#9	29'-9"	
b6(E)	8	#4	14'-8"	
d(E)	68	#5	5'-7"	
d2(E)	68	#5	7'-11"	
e10(E)	32	#4	14'-8"	
e11(E)	4	#8	14'-8"	
t1(E)	168	#4	11'-2"	
w2(E)	80	#5	21'-9"	
w3(E)	80	#5	25'-10"	
Concrete Superstructure			Cu. Yd.	132.6
Concrete Structures			Cu. Yd.	29.8
Bridge Deck Grooving			Sq. Yd.	257
Protective Coat			Sq. Yd.	300
Reinforcement Bars, Epoxy Coated			Pound	34,720

Farnsworth GROUP, INC.
2709 McGraw Drive
Bloomington, Illinois 61704
309/663-8435, 309/663-1571 fax

	DESIGNED - JML	REVISED - 11/25/14
	CHECKED - MSW	REVISED
	DRAWN - DJM	REVISED
DATE - 04/10/14	CHECKED - MSW	REVISED

STATE OF ILLINOIS
DEPARTMENT OF TRANSPORTATION

BRIDGE APPROACH SLAB DETAILS
STRUCTURE NO. 038-0219

SHEET NO. B17 OF 34 SHEETS

F.A.P. RTE.	SECTION	COUNTY	TOTAL SHEETS	SHEET NO.
332	(3)BR	IROQUOIS	100	48

CONTRACT NO. 66736

ILLINOIS FED. AID PROJECT

24-8052

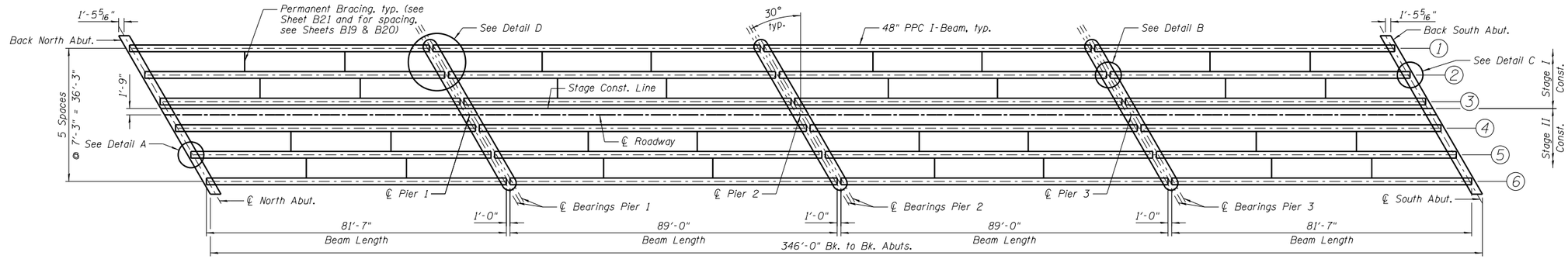

FRAMING PLAN

INTERIOR BEAM MOMENT TABLE					
		0.4 Sp. #1 0.6 Sp. #4	Pier #1 or #3	0.5 Sp. #2 0.5 Sp. #3	Pier #2
I	(in^4)	144.117		144.117	
I'	(in^4)	417.803		417.803	
S_b	(in^3)	6.834		6.834	
S_b'	(in^3)	11.599		11.599	
S_t	(in^3)	5.355		5.355	
S_t'	(in^3)	19.914		19.914	
DC1	(k/')	1.328		1.328	
M_{DC1}	('k)	1040		1295	
DC2	(k/')	0.150	0.150	0.150	0.150
M_{DC2}	('k)	74	107	47	88
DW	(k/')	0.363	0.363	0.363	0.363
M_{DW}	('k)	165	238	105	196
M_{LL+IM}	('k)	1032	1002	927	981

I: Non-composite moment of inertia of beam section ($in.^4$).
I': Composite moment of inertia of beam section ($in.^4$).
S_b: Non-composite section modulus for the bottom fiber of the prestressed beam ($in.^3$).
S_b': Composite section modulus for the bottom fiber of the prestressed beam ($in.^3$).
S_t: Non-composite section modulus for the top fiber of the prestressed beam ($in.^3$).
S_t': Composite section modulus for the top fiber of the prestressed beam ($in.^3$).
DC1: Un-factored non-composite dead load (kips/ft.).
M_{DC1}: Un-factored moment due to non-composite dead load (kip-ft.).
DC2: Un-factored long-term composite (superimposed excluding future wearing surface) dead load (kips/ft.).
M_{DC2}: Un-factored moment due to long-term composite (superimposed excluding future wearing surface) dead load (kip-ft.).
DW: Un-factored long-term composite (superimposed future wearing surface only) dead load (kips/ft.).
M_{DW}: Un-factored moment due to long-term composite (superimposed future wearing surface only) dead load (kip-ft).
M_{LL+IM}: Un-factored live load moment plus dynamic load allowance (impact) (kip-ft.).

INTERIOR BEAM REACTION TABLE					
		Abutment	Pier #1 Sp. #1 Pier #3 Sp. #4	Pier #1 Sp. #2 Pier #3 Sp. #3	Pier #2 Sp. #2 Pier #2 Sp. #3
	R_{DC1} (k)	53.9	53.9	58.8	58.8
*	R_{DC2} (k)	4.7	7.3	7.3	6.6
*	R_{DW} (k)	10.5	16.1	16.1	14.6
*	R_{LL+IM} (k)	95.7	83.7	83.7	82.4
	R_{TOTAL} (k)	164.8	161.0	165.9	162.4

*At continuous piers, reactions from composite loads are assumed to be equally distributed to each bearing line.

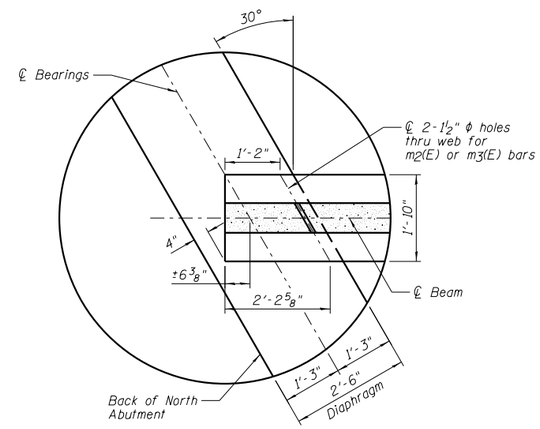

DETAIL A

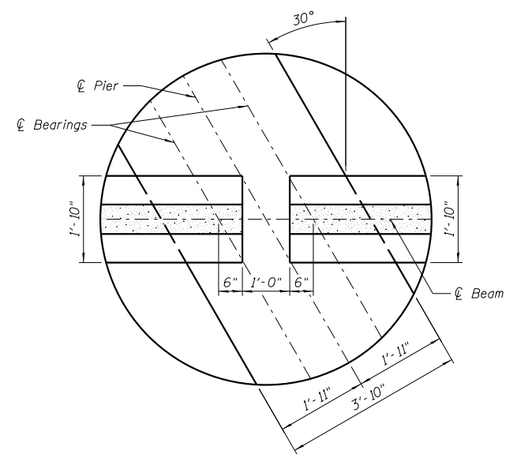

DETAIL B

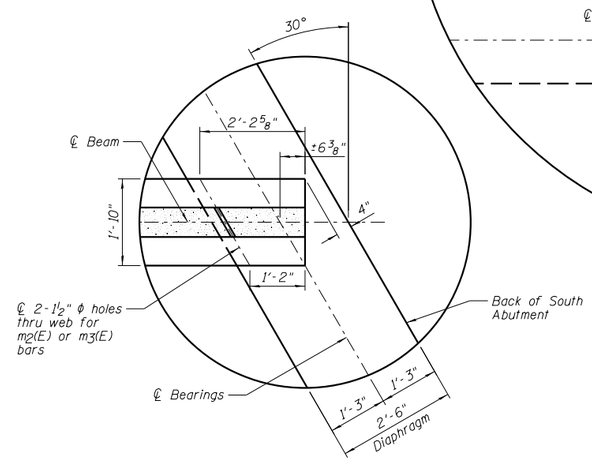

DETAIL C

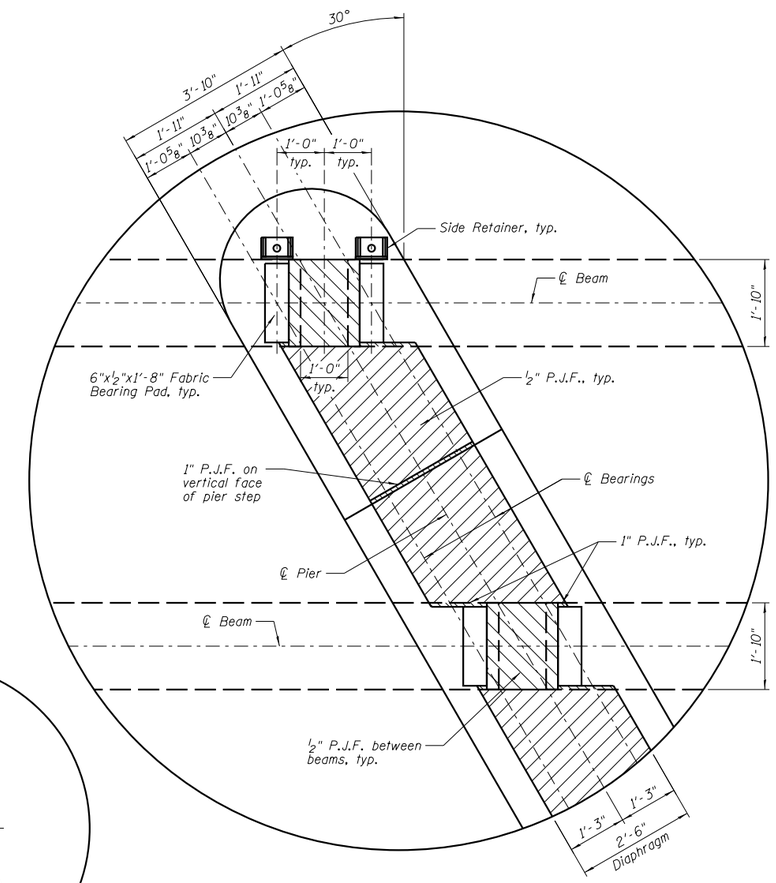

DETAIL D

Farnsworth GROUP, INC.
2709 McGraw Drive
Bloomington, Illinois 61704
309/663-8435, 309/663-1571 fax

	DESIGNED - JML	REVISED
	CHECKED - MSW	REVISED
	DRAWN - DJM	REVISED
DATE - 04/10/14	CHECKED - MSW	REVISED

STATE OF ILLINOIS
DEPARTMENT OF TRANSPORTATION

FRAMING PLAN
STRUCTURE NO. 038-0219
SHEET NO. B18 OF 34 SHEETS

F.A.P. RTE.	SECTION	COUNTY	TOTAL SHEETS	SHEET NO.
332	(3)BR	IROQUOIS	100	49
		CONTRACT NO. 66736		
		ILLINOIS FED. AID PROJECT		

24-8052

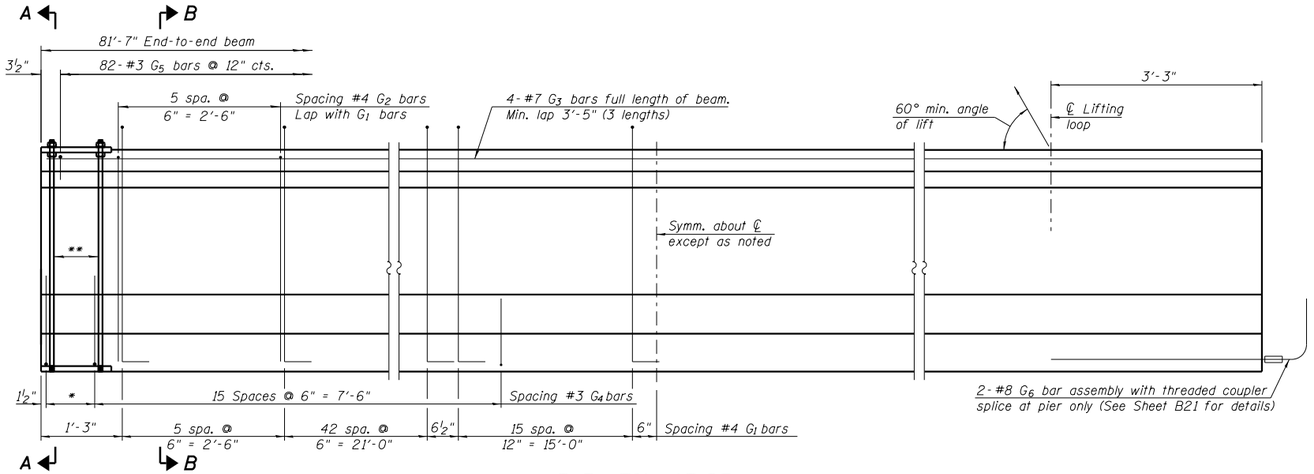

*3 spaces at 3" = 9"
**4-¾" ϕ threaded dowel rods at 3" cts., Each Face.

ELEVATION OF BEAM

(Showing reinforcement & dimensions)

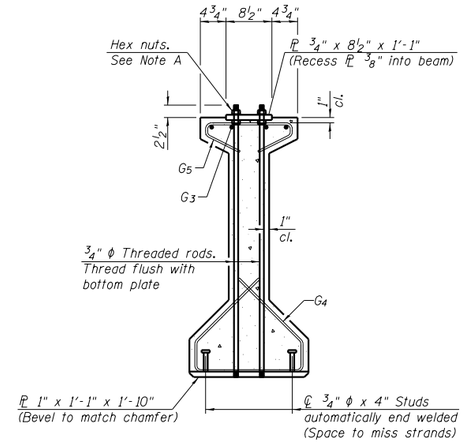

SECTION A-A

Note A:
Hex nuts (top and bottom) with lock washers (top). Only tighten sufficiently to compress lock washers.

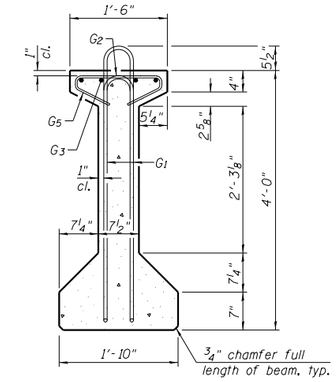

SECTION B-B

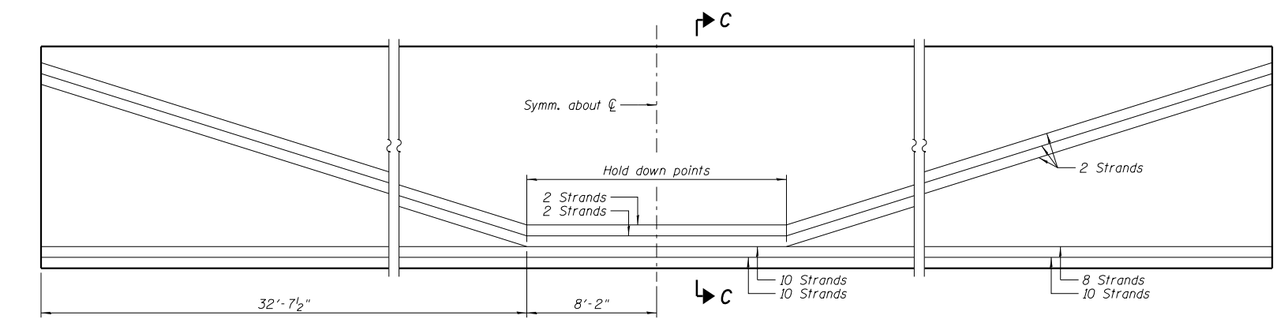

ELEVATION OF BEAM - SPAN 1 & 4

(Showing prestressing steel)

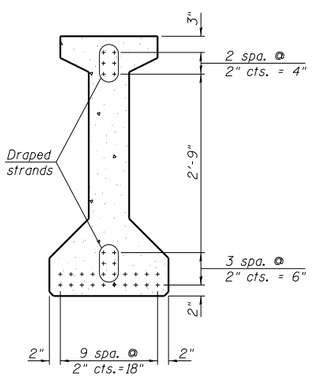

SECTION C-C

***BAR LIST ONE BEAM ONLY

Bar	No.	Size	Length	Shape
G_1	128	#4	9'-8"	
G_2	12	#4	7'-11"	
G_3	12	#7	29'-6"	
G_4	38	#3	5'-3"	
G_5	82	#3	2'-9"	
G_6	2	#8	6'-6"	

***For information only

Notes:
See Sheet B21 for additional details and Bill of Material.
Required release strength, f'ci, shall be 6,000 psi.

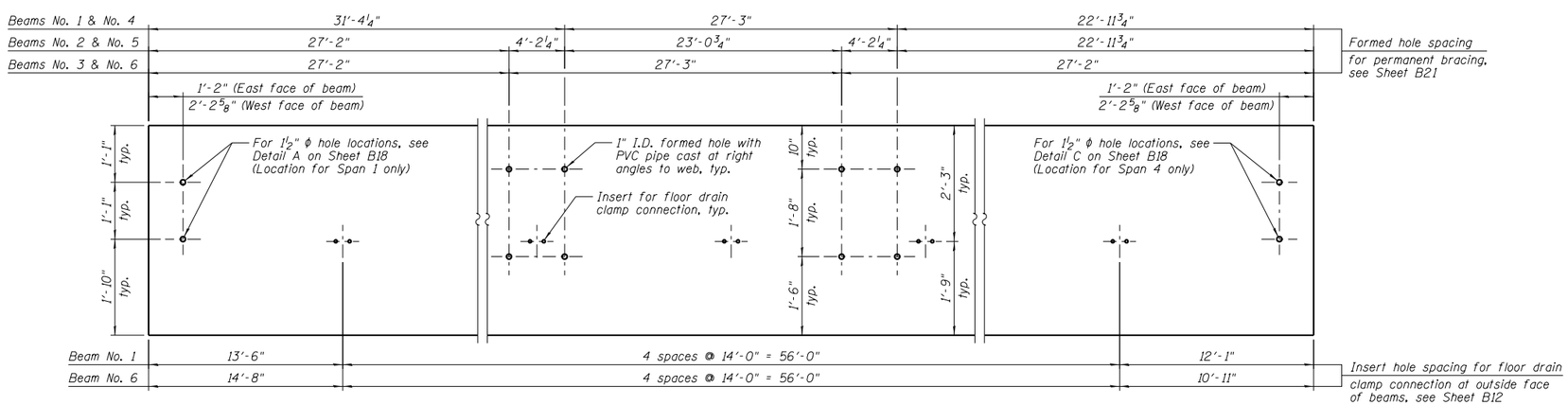

ELEVATION OF BEAM - SPAN 1 & 4

(Showing floor drain inserts and miscellaneous formed holes)

Farnsworth GROUP, INC.
2709 McGraw Drive
Bloomington, Illinois 61704
309/663-8435, 309/663-1571 fax

	DESIGNED - JML	REVISED
	CHECKED - MSW	REVISED
	DRAWN - DJM	REVISED
DATE - 04/10/14	CHECKED - MSW	REVISED

STATE OF ILLINOIS
DEPARTMENT OF TRANSPORTATION

48" PPC I-BEAM (SPANS 1 & 4)
STRUCTURE NO. 038-0219

SHEET NO. B19 OF 34 SHEETS

F.A.P. RTE.	SECTION	COUNTY	TOTAL SHEETS	SHEET NO.
332	(3)BR	IROQUOIS	100	50

CONTRACT NO. 66736

ILLINOIS FED. AID PROJECT

24-8052

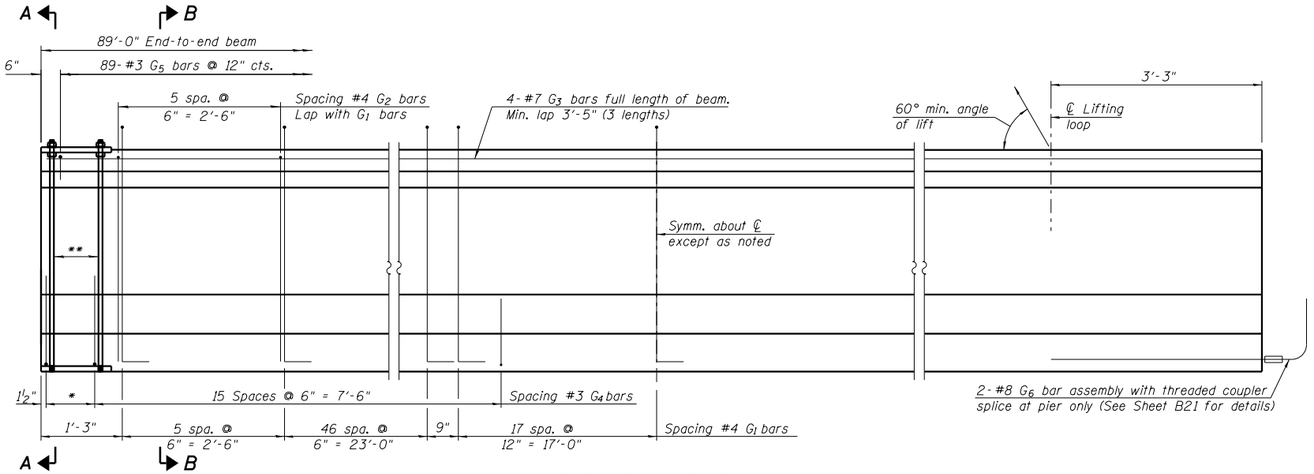

*3 spaces at 3" = 9"
**4- ¾" ϕ threaded dowel rods at 3" cts., Each Face.

ELEVATION OF BEAM

(Showing reinforcement & dimensions)

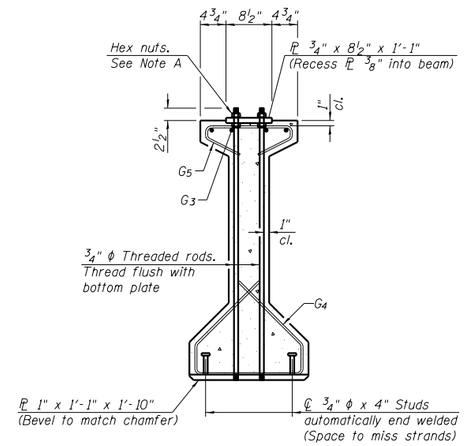

SECTION A-A

Note A:
Hex nuts (top and bottom) with lock washers (top). Only tighten sufficiently to compress lock washers.

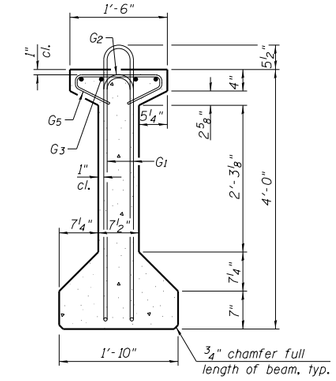

SECTION B-B

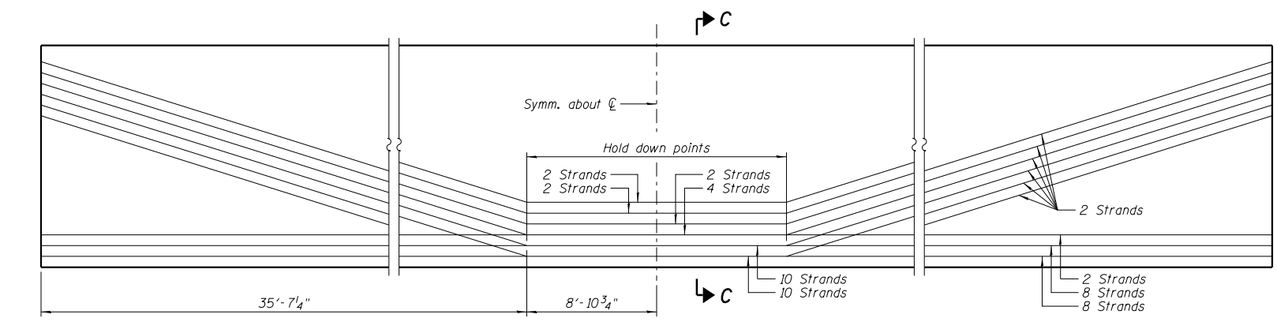

ELEVATION OF BEAM - SPAN 2 & 3

(Showing prestressing steel)

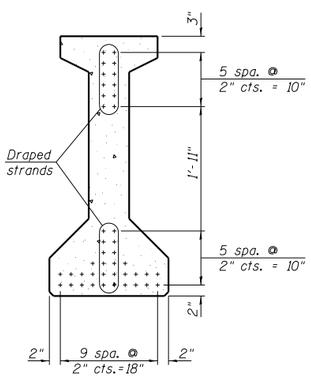

SECTION C-C

***BAR LIST ONE BEAM ONLY

Bar	No.	Size	Length	Shape
G_1	139	#4	9'-8"	
G_2	12	#4	7'-11"	
G_3	12	#7	32'-0"	
G_4	38	#3	5'-3"	
G_5	89	#3	2'-9"	
G_6	4	#8	6'-6"	

***For information only

Notes:
See Sheet B21 for additional details and Bill of Material.
Required release strength, f'ci, shall be 6,000 psi.

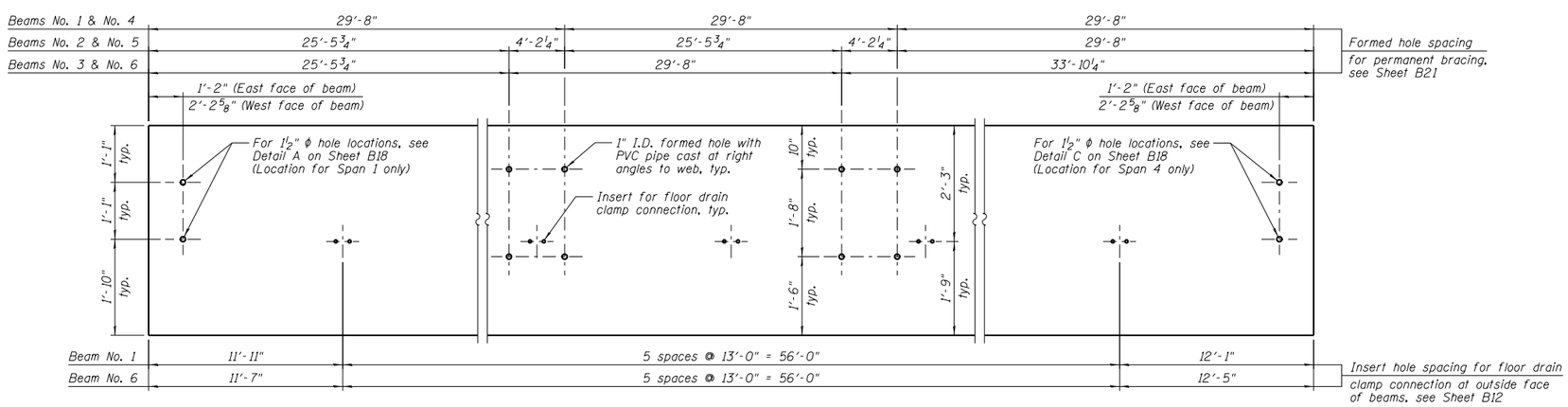

ELEVATION OF BEAM - SPAN 2 & 3

(Showing floor drain inserts and miscellaneous formed holes)

Farnsworth GROUP, INC.
2709 McGraw Drive
Bloomington, Illinois 61704
309/663-8435, 309/663-1571 fax

	DESIGNED - JML	REVISED
	CHECKED - MSW	REVISED
	DRAWN - DJM	REVISED
DATE - 04/10/14	CHECKED - MSW	REVISED

STATE OF ILLINOIS
DEPARTMENT OF TRANSPORTATION

48" PPC I-BEAM (SPANS 2 & 3)
STRUCTURE NO. 038-0219

SHEET NO. B20 OF 34 SHEETS

F.A.P. RTE.	SECTION	COUNTY	TOTAL SHEETS	SHEET NO.
332	(3)BR	IROQUOIS	100	51

CONTRACT NO. 66736

ILLINOIS FED. AID PROJECT

24-8052

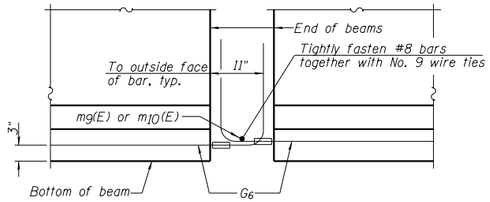

ELEVATION OF BEAM AT PIER

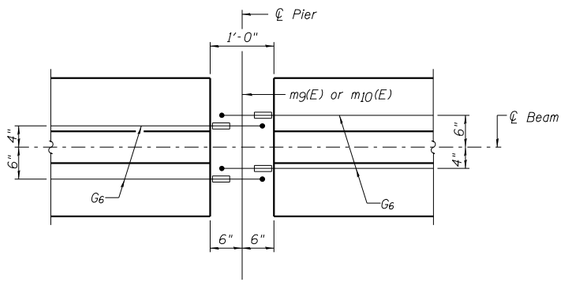

PLAN OF BEAM AT PIER

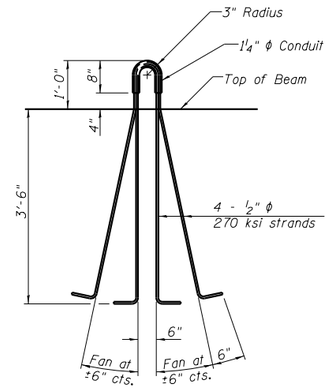

LIFTING LOOP DETAIL

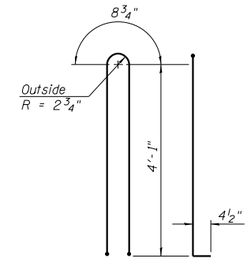

BAR G1

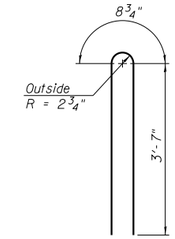

BAR G2

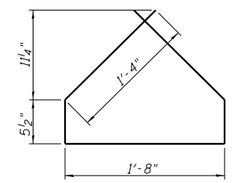

BAR G4

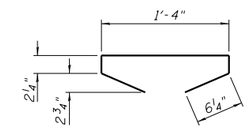

BAR G5

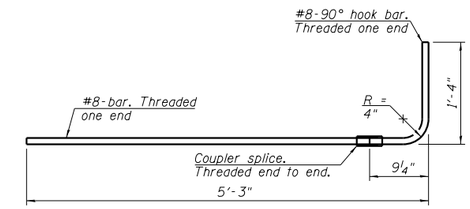

G6 BAR ASSEMBLY

NOTES

Inserts for ¾" ϕ threaded dowel rods, when specified, are to be two strut, ferrule type for interior beams and single ferrule, flared loop type for exterior beams.

Prestressing steel shall be uncoated high strength, low relaxation 7-wire strand, Grade 270. The nominal diameter shall be ½" and the nominal cross-sectional area shall be 0.153 sq. in.

A minimum 2½" ϕ lifting pin shall be used to engage the lifting loops during handling.

Tilt G_6 bars when necessary to maintain 1½" clearance.

The top and bottom plates shall be AASHTO M270 Grade 50.

The bottom plates and studs shall be galvanized according to AASHTO M111. Top plates and threaded rods need not be galvanized.

Threaded rods shall be ASTM F 1554 Grade 55.

The G_6 bar assembly shall be capable of developing 125 percent of the yield strength of the grade 60 reinforcement bar components. The assembly shall allow completion of the splice without turning of the hook bar. The hook bar shall be threaded such that the entire coupler can be threaded onto the hook bar.

Beams requiring G_6 bar assemblies shall not be released from the fabricator until they have attained 45 days of age or older.

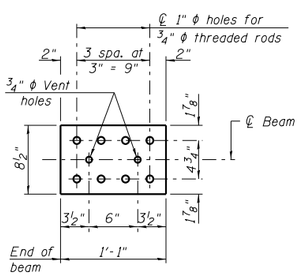

TOP PLATE

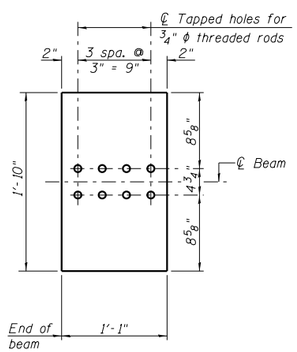

BOTTOM PLATE

(Showing threaded rods)

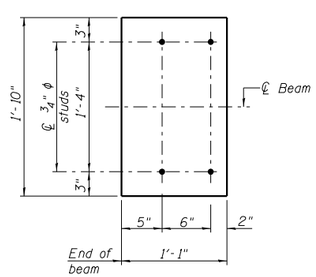

BOTTOM PLATE

(Showing studs)

See bearing details for pintle hole locations when required.

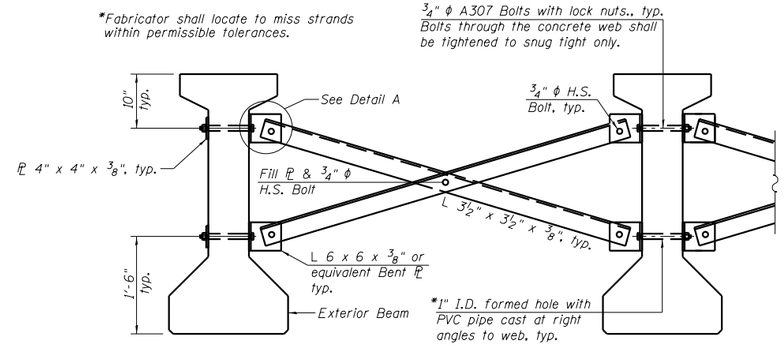

Notes:

All material for bracing shall be hot dip galvanized according to AASHTO M111 unless otherwise noted.

Two hardened washers are required for each set of oversized holes.

All holes shall be 15/16" ϕ unless otherwise noted.

5/16" x 3" x 3" plate washers are required over all slotted holes.

All bolts shall be galvanized according to AASHTO M232.

Bracing shall be installed as beams are erected and tightened as soon as possible during erection.

Permanent bracing shall not be paid for separately, but shall be included in the cost of Furnishing and Erecting Precast Prestressed Concrete I-Beams.

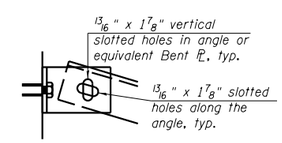

DETAIL A

PERMANENT BRACING DETAILS FOR 48" PPC I-BEAMS

BILL OF MATERIAL

Item	Unit	Total
Furnishing and Erecting Precast Prestressed Concrete I-Beams, 48"	Ft.	2,047

Farnsworth GROUP, INC.
2709 McGraw Drive
Bloomington, Illinois 61704
309/663-8435, 309/663-1571 fax

	DESIGNED - JML	REVISED - 12/14/14
	CHECKED - MSW	REVISED
	DRAWN - DJM	REVISED
DATE - 04/10/14	CHECKED - MSW	REVISED

STATE OF ILLINOIS
DEPARTMENT OF TRANSPORTATION

48" PPC I-BEAM DETAILS
STRUCTURE NO. 038-0219

SHEET NO. B21 OF 34 SHEETS

F.A.P. RTE.	SECTION	COUNTY	TOTAL SHEETS	SHEET NO.
332	(3)BR	IROQUOIS	100	52
		CONTRACT NO. 66736		
	ILLINOIS	FED. AID PROJECT		

24-8052

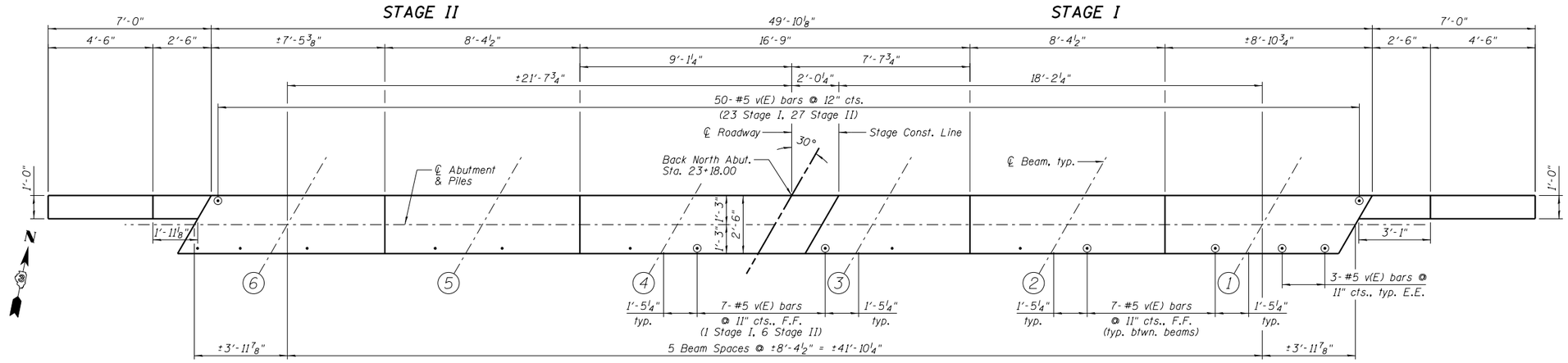

TOP VIEW ABUTMENT (SHOWING BEARING SEAT)

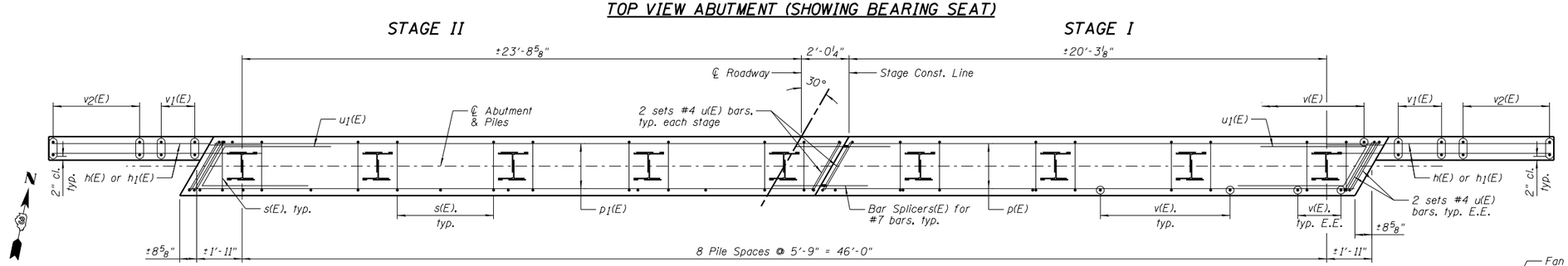

PLAN - PILE CAP

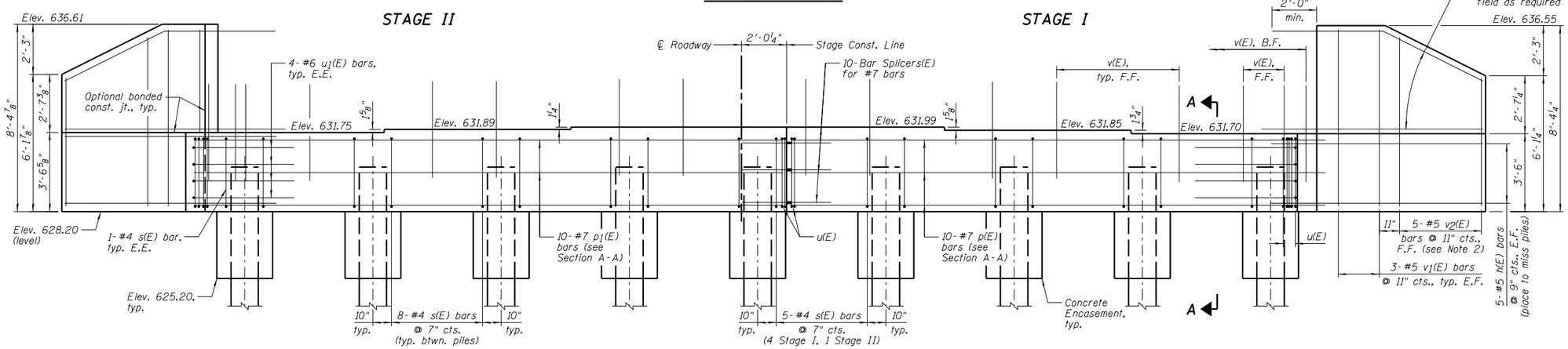

ELEVATION

(Looking North)

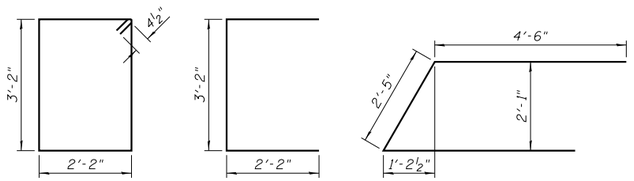

s(E) BAR u(E) BAR u1(E) BAR

NORTH ABUTMENT BILL OF MATERIAL

BAR	NO.	SIZE	LENGTH	SHAPE
h(E)	20	#5	9'-5"	
h1(E)	28	#5	9'-11"	
p(E)	10	#7	22'-6"	
p1(E)	10	#7	26'-7"	
s(E)	63	#4	11'-5"	
u(E)	8	#4	7'-6"	
u1(E)	8	#6	11'-5"	
v(E)	91	#5	4'-4"	
v1(E)	12	#5	8'-0"	
v2(E)	10	#5	13'-4"	

ITEM	UNIT	QUANTITY
Structure Excavation	Cu. Yd.	142
Concrete Structures	Cu. Yd.	20.9
Concrete Encasement	Cu. Yd.	4.9
Reinforcement Bars, Epoxy Coated	Pound	2,770
Furnishing Steel Piles HP 14x89	Foot	918
Driving Piles	Foot	918
Geocomposite Wall Drain	Sq. Yd.	48
Pipe Underdrains for Structures 4"	Foot	88
Granular Backfill for Structures	Cu. Yd.	96

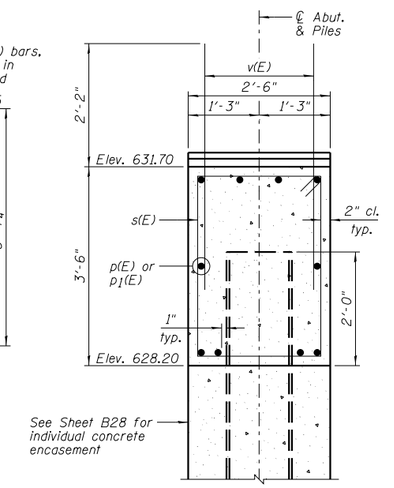

SECTION A-A

PILE DATA:

Pile Type and Size	Steel - HP14x89
Nominal Required Bearing	496 kips
Factored Resistance Available	273 kips
Estimated Pile Length	102 Feet
Number of Production Piles	9
Number of Test Piles	0

BAR CUTTING DIAGRAM

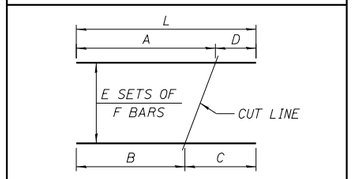

BAR	A	B	C	D	E	F	L
v2(E)	7'-7"	5'-9"	7'-7"	5'-9"	2	5	13'-4"

NOTES:

1.) Pour steps monolithically with cap.
2.) Order v2(E) bars full length, cut according to the Bar Cutting Diagram. Use remainder of bars in opposite face of wingwall.
3.) E.F. denotes Each Face, B.F. denotes Back Face, F.F. denotes Front Face and E.E. denotes Each End.
4.) See Sheet B29 for Bar Splicer Details.

Farnsworth GROUP, INC.
2709 McGraw Drive
Bloomington, Illinois 61704
309/663-8435, 309/663-1571 fax

DESIGNED - JML	REVISED	
CHECKED - MSW	REVISED	
DRAWN - DJM	REVISED	
DATE - 04/10/14	CHECKED - MSW	REVISED

STATE OF ILLINOIS
DEPARTMENT OF TRANSPORTATION

NORTH ABUTMENT
STRUCTURE NO. 038-0219

SHEET NO. B22 OF 34 SHEETS

F.A.P. RTE.	SECTION	COUNTY	TOTAL SHEETS	SHEET NO.
332	(3)BR	IROQUOIS	100	53

CONTRACT NO. 66736

ILLINOIS FED. AID PROJECT

24-8052

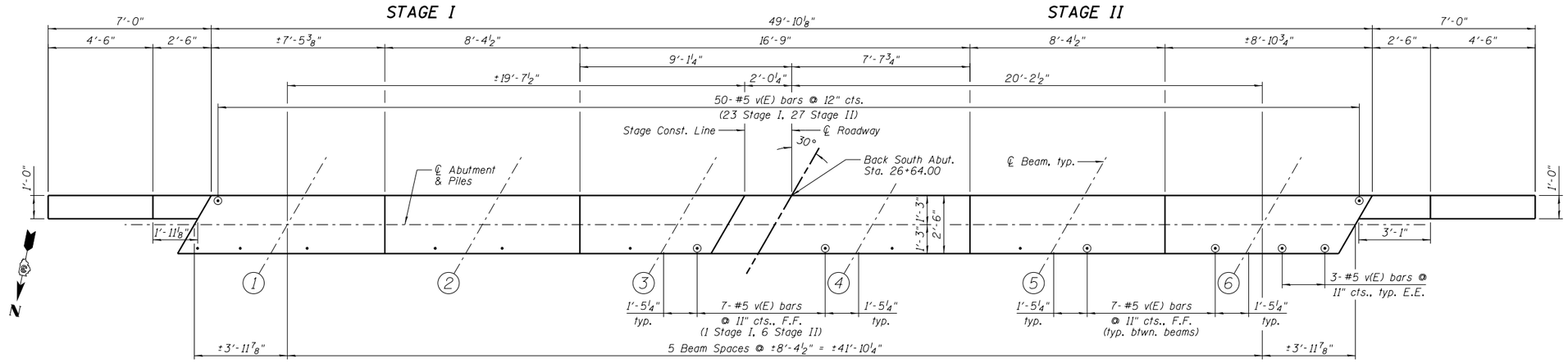

TOP VIEW ABUTMENT (SHOWING BEARING SEAT)

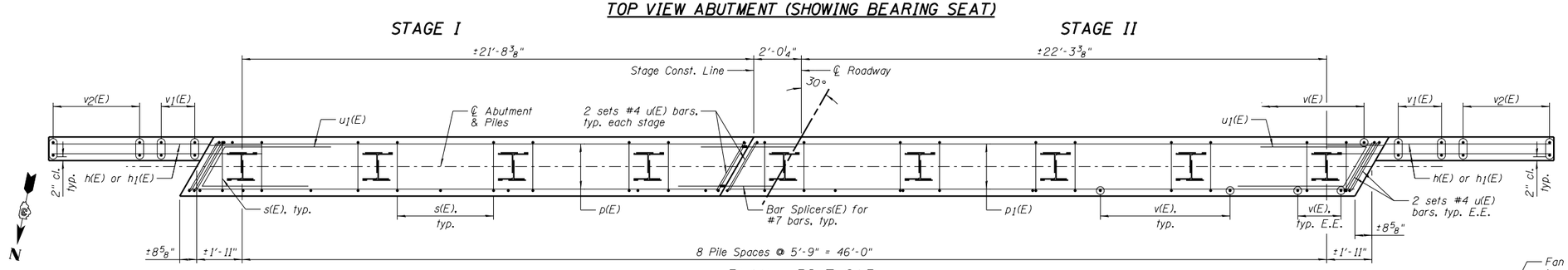

PLAN - PILE CAP

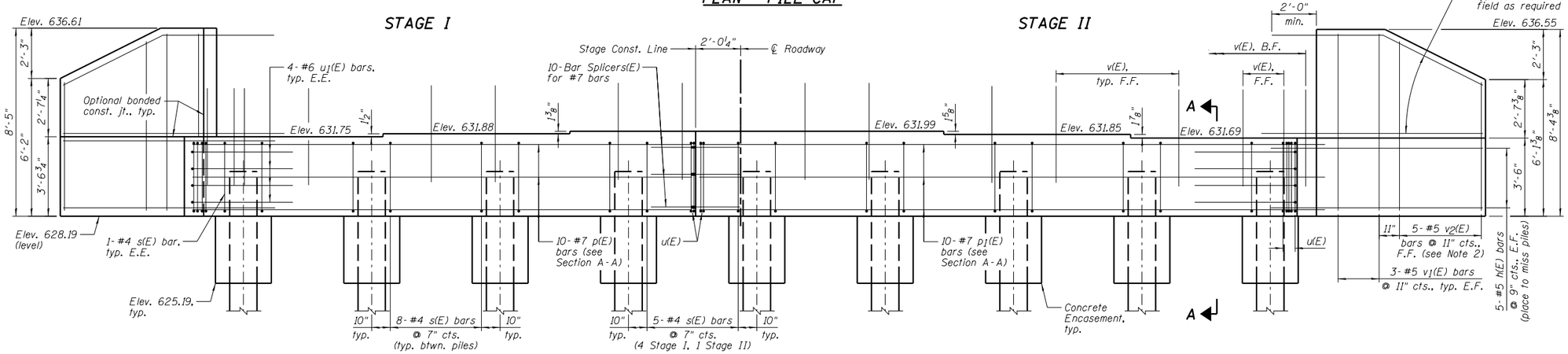

ELEVATION

(Looking South)

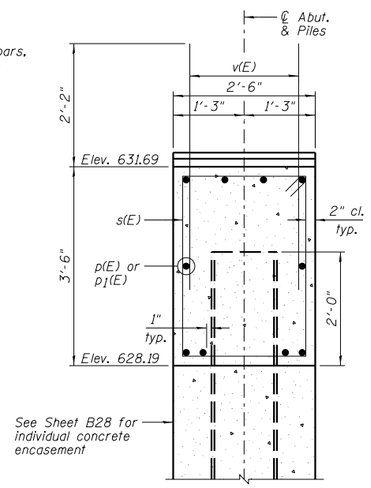

SECTION A-A

PILE DATA:

Pile Type and Size	Steel - HP14x89
Nominal Required Bearing	513 kips
Factored Resistance Available	282 kips
Estimated Pile Length	91 Feet
Number of Production Piles	8
Number of Test Piles	1

Note: Drive Test Pile under Stage I.

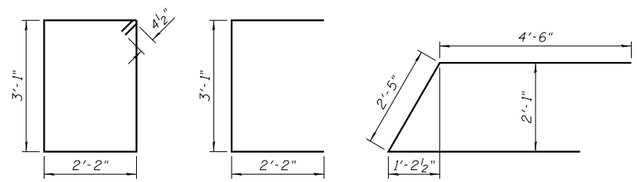

s(E) BAR u(E) BAR u1(E) BAR

BAR CUTTING DIAGRAM

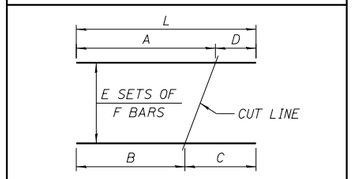

BAR	A	B	C	D	E	F	L
v2(E)	7'-7"	5'-9"	7'-7"	5'-9"	2	5	13'-4"

SOUTH ABUTMENT BILL OF MATERIAL

BAR	NO.	SIZE	LENGTH	SHAPE
h(E)	20	#5	9'-5"	
h1(E)	28	#5	9'-11"	
p(E)	10	#7	22'-6"	
p1(E)	10	#7	26'-7"	
s(E)	63	#4	11'-5"	
u(E)	8	#4	7'-6"	
u1(E)	8	#6	11'-5"	
v(E)	91	#5	4'-4"	
v1(E)	12	#5	8'-0"	
v2(E)	10	#5	13'-4"	

ITEM	UNIT	QUANTITY
Structure Excavation	Cu. Yd.	142
Concrete Structures	Cu. Yd.	20.9
Concrete Encasement	Cu. Yd.	4.9
Reinforcement Bars, Epoxy Coated	Pound	2,770
Furnishing Steel Piles HP 14x89	Foot	728
Driving Piles	Foot	728
Test Pile Steel HP 14x89	Each	1
Geocomposite Wall Drain	Sq. Yd.	48
Pipe Underdrains for Structures 4"	Foot	88
Granular Backfill for Structures	Cu. Yd.	96

NOTES:

1.) Pour steps monolithically with cap.
2.) Order v2(E) bars full length, cut according to the Bar Cutting Diagram. Use remainder of bars in opposite face of wingwall.
3.) E.F. denotes Each Face, B.F. denotes Back Face, F.F. denotes Front Face and E.E. denotes Each End.
4.) See Sheet B29 for Bar Splicer Details.

Farnsworth GROUP, INC.
2709 McGraw Drive
Bloomington, Illinois 61704
309/663-8435, 309/663-1571 fax

DESIGNED - JML	REVISED	
CHECKED - MSW	REVISED	
DRAWN - DJM	REVISED	
DATE - 04/10/14	CHECKED - MSW	REVISED

STATE OF ILLINOIS
DEPARTMENT OF TRANSPORTATION

SOUTH ABUTMENT
STRUCTURE NO. 038-0219

SHEET NO. B23 OF 34 SHEETS

F.A.P. RTE.	SECTION	COUNTY	TOTAL SHEETS	SHEET NO.
332	(3)BR	IROQUOIS	100	54

CONTRACT NO. 66736

ILLINOIS FED. AID PROJECT

24-8052

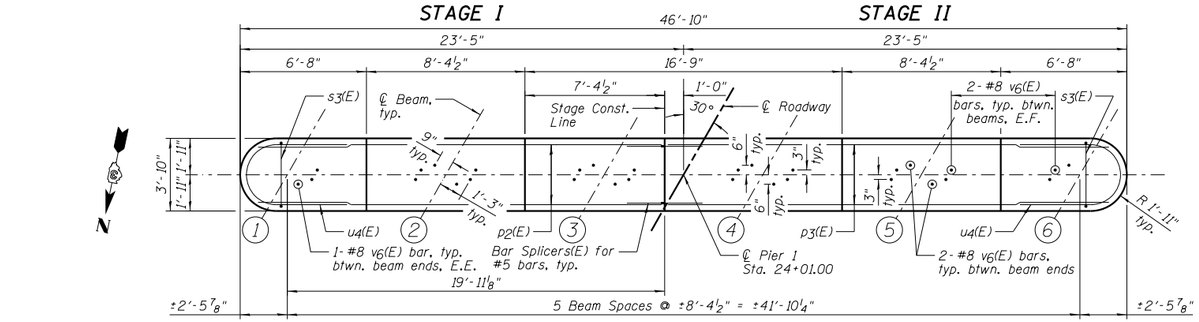

TOP PLAN

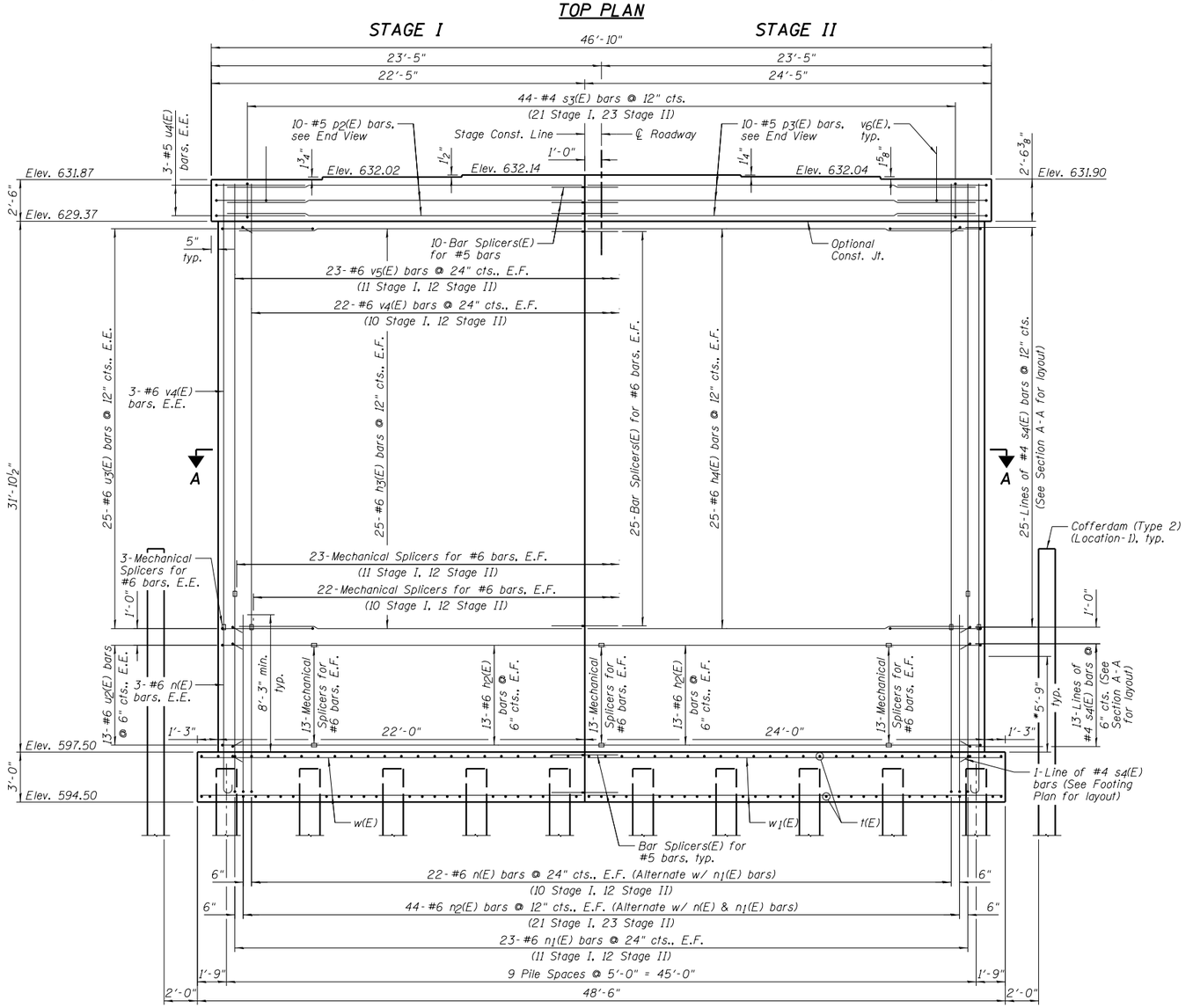

ELEVATION

(Looking South)

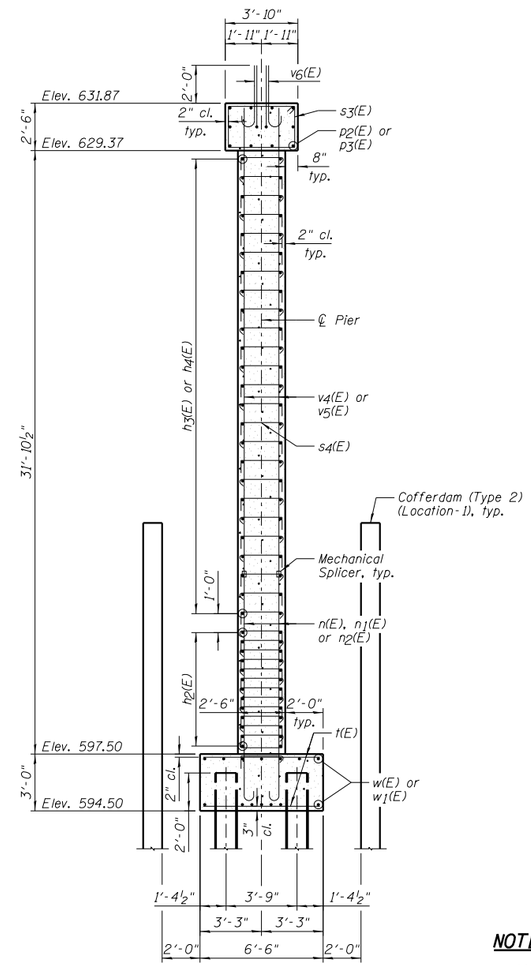

END VIEW

PIER NO. 1
BILL OF MATERIAL

Bar	No.	Size	Length	Shape
h2(E)	52	#6	17'-3"	
h3(E)	50	#6	20'-7"	
h4(E)	50	#6	22'-7"	
n(E)	50	#6	10'-5"	
n1(E)	46	#6	12'-5"	
n2(E)	88	#6	11'-8"	
p2(E)	10	#5	21'-3"	
p3(E)	10	#5	23'-3"	
s3(E)	44	#4	12'-1"	
s4(E)	897	#4	3'-3"	
t(E)	98	#6	6'-2"	
u2(E)	26	#6	12'-3"	
u3(E)	50	#6	14'-3"	
u4(E)	6	#5	12'-7"	
v4(E)	50	#6	26'-10"	
v5(E)	46	#6	24'-10"	
v6(E)	30	#8	4'-2"	
w(E)	14	#5	22'-11"	
w1(E)	14	#5	24'-11"	

Item	Unit	Quantity
Cofferdam Excavation	Cu. Yd.	216
Concrete Structures	Cu. Yd.	186.6
Reinforcement Bars, Epoxy Coated	Pound	17,840
Furnishing Steel Piles HP14x89	Foot	1,425
Driving Piles	Foot	1,425
Test Pile Steel HP14x89	Each	1

PILE DATA:

Pile Type and Size	Steel - HP14x89
Nominal Required Bearing	532 kips
Factored Resistance Available	282 kips
Estimated Pile Length	75 Feet
Number of Production Piles	19
Number of Test Piles	1

Note: Drive Test Pile under Stage I.

NOTES:

1.) Pour steps monolithically with cap.
2.) E.F. denotes Each Face and E.E. denotes Each End.
3.) See Sheet B27 for Section A-A, Footing Plan and details.
4.) See Sheet B29 for Bar Splicer Details.
5.) *Limits of plastic hinging region. Splicing of reinforcement will not be allowed in this region.
6.) Space reinforcement in caps to miss anchor bolts.

Farnsworth GROUP, INC.
2709 McGraw Drive
Bloomington, Illinois 61704
309/663-8435, 309/663-1571 fax

	DESIGNED - JML	REVISED
	CHECKED - MSW	REVISED
	DRAWN - DJM	REVISED
DATE - 04/10/14	CHECKED - MSW	REVISED

STATE OF ILLINOIS
DEPARTMENT OF TRANSPORTATION

PIER NO. 1
STRUCTURE NO. 038-0219

SHEET NO. B24 OF 34 SHEETS

F.A.P. RTE.	SECTION	COUNTY	TOTAL SHEETS	SHEET NO.
332	(3)BR	IROQUOIS	100	55

CONTRACT NO. 66736

ILLINOIS FED. AID PROJECT

24-8052

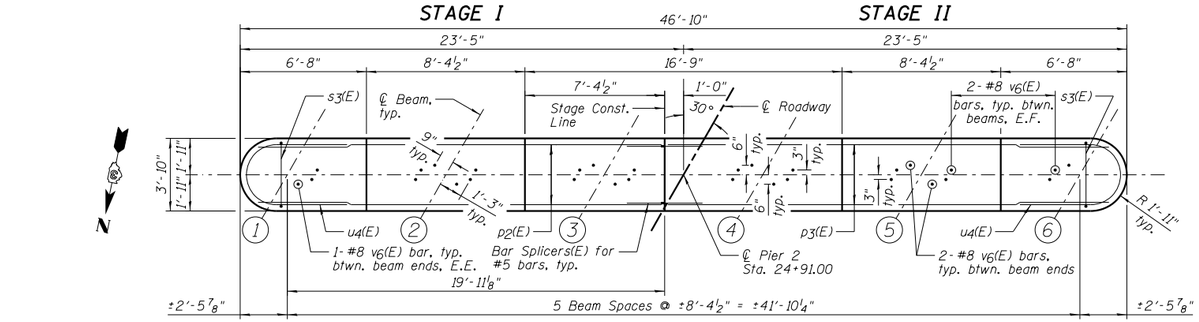

TOP PLAN

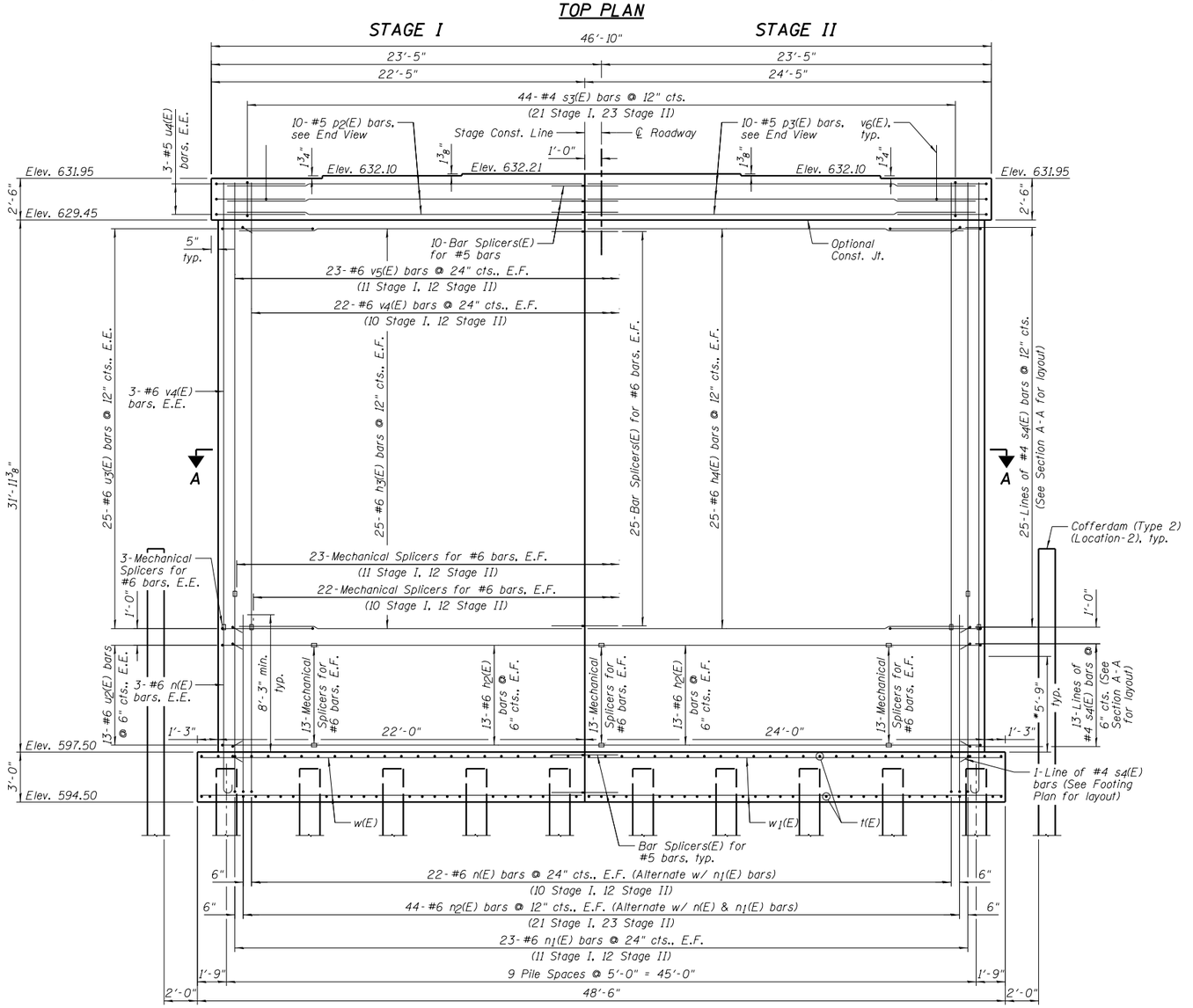

ELEVATION
(Looking South)

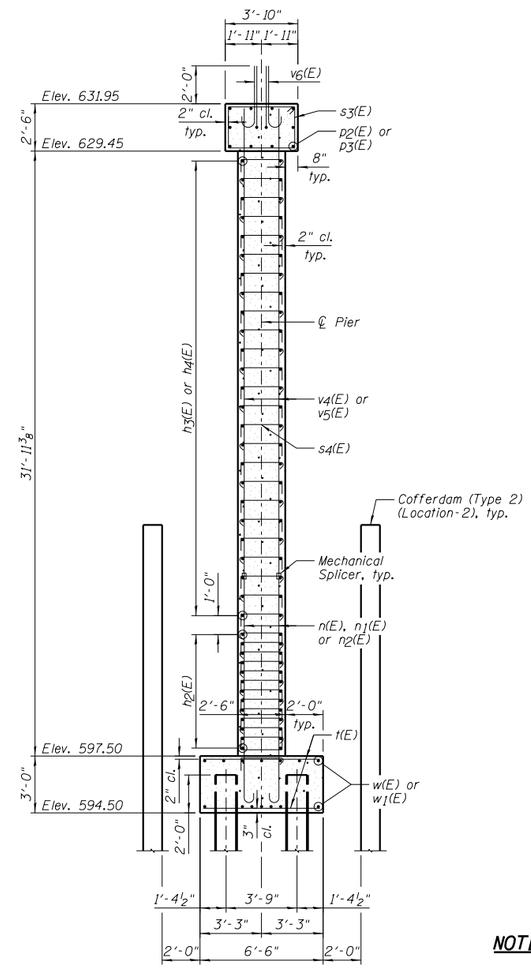

END VIEW

PIER NO. 2
BILL OF MATERIAL

Bar	No.	Size	Length	Shape
h2(E)	52	#6	17'-3"	
h3(E)	50	#6	20'-7"	
h4(E)	50	#6	22'-7"	
n(E)	50	#6	10'-5"	
n1(E)	46	#6	12'-5"	
n2(E)	88	#6	11'-8"	
p2(E)	10	#5	21'-3"	
p3(E)	10	#5	23'-3"	
s3(E)	44	#4	12'-1"	
s4(E)	897	#4	3'-3"	
t(E)	98	#6	6'-2"	
u2(E)	26	#6	12'-3"	
u3(E)	50	#6	14'-3"	
u4(E)	6	#5	12'-7"	
v4(E)	50	#6	26'-10"	
v5(E)	46	#6	24'-10"	
v6(E)	30	#8	4'-2"	
w(E)	14	#5	22'-11"	
w1(E)	14	#5	24'-11"	

Item	Unit	Quantity
Cofferdam Excavation	Cu. Yd.	347
Concrete Structures	Cu. Yd.	186.8
Reinforcement Bars, Epoxy Coated	Pound	17,840
Furnishing Steel Piles HP14x89	Foot	1,460
Driving Piles	Foot	1,460

PILE DATA:

Pile Type and Size	Steel - HP14x89
Nominal Required Bearing	490 kips
Factored Resistance Available	265 kips
Estimated Pile Length	73 Feet
Number of Production Piles	20
Number of Test Piles	0

NOTES:

1.) Pour steps monolithically with cap.
2.) E.F. denotes Each Face and E.E. denotes Each End.
3.) See Sheet B27 for Section A-A, Footing Plan and details.
4.) See Sheet B29 for Bar Splicer Details.
5.) *Limits of plastic hinging region. Splicing of reinforcement will not be allowed in this region.
6.) Space reinforcement in caps to miss anchor bolts.

Farnsworth GROUP, INC.
2709 McGraw Drive
Bloomington, Illinois 61704
309/663-8435, 309/663-1571 fax

	DESIGNED - JML	REVISED
	CHECKED - MSW	REVISED
	DRAWN - DJM	REVISED
DATE - 04/10/14	CHECKED - MSW	REVISED

STATE OF ILLINOIS
DEPARTMENT OF TRANSPORTATION

PIER NO. 2
STRUCTURE NO. 038-0219

SHEET NO. B25 OF 34 SHEETS

F.A.P. RTE.	SECTION	COUNTY	TOTAL SHEETS	SHEET NO.
332	(3)BR	IROQUOIS	100	56

CONTRACT NO. 66736

ILLINOIS FED. AID PROJECT

24-8052

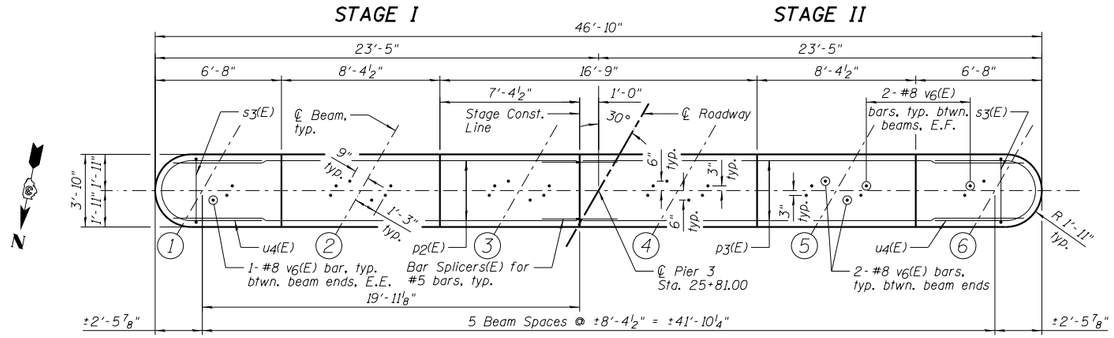

TOP PLAN

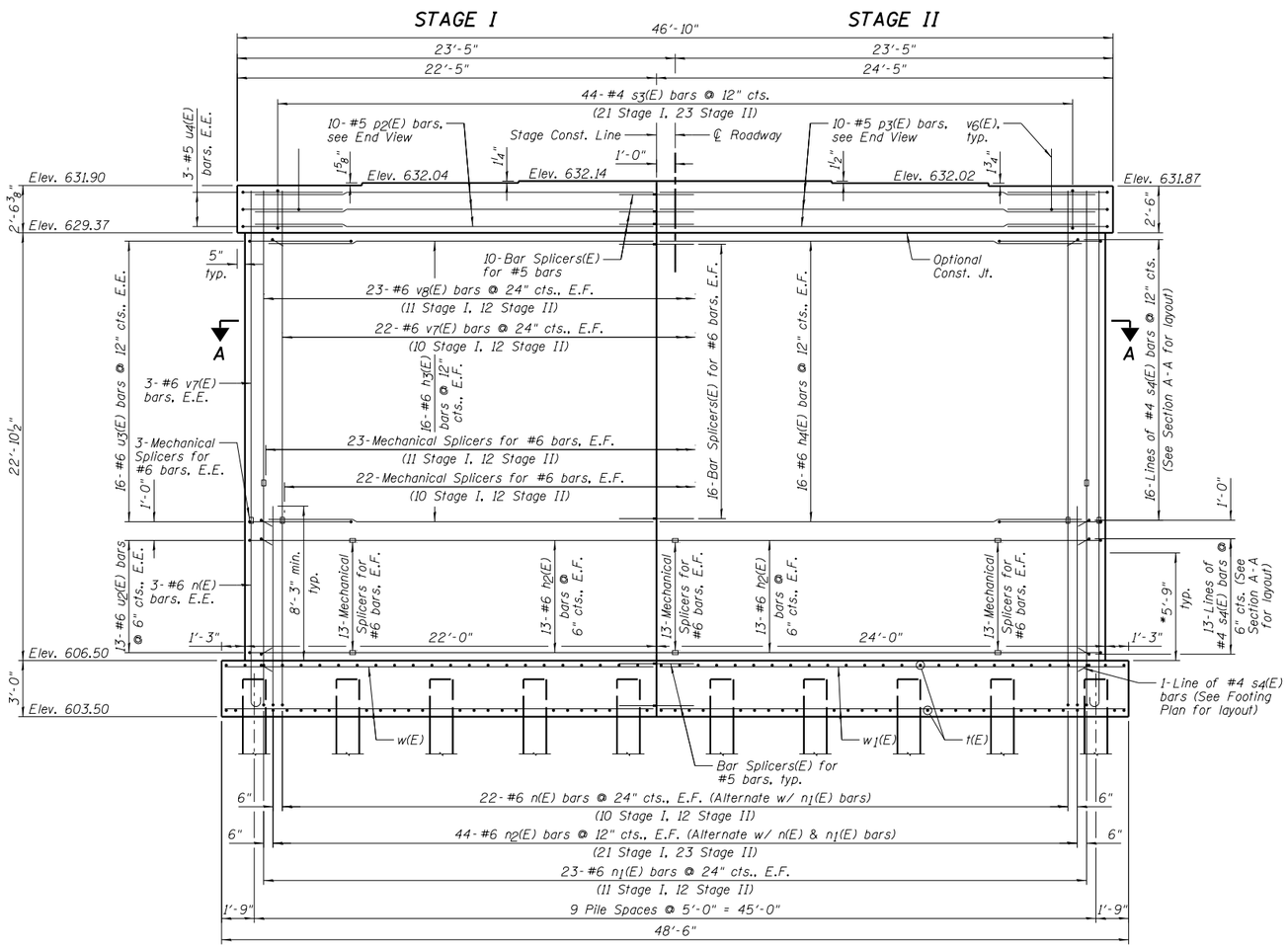

ELEVATION

(Looking South)

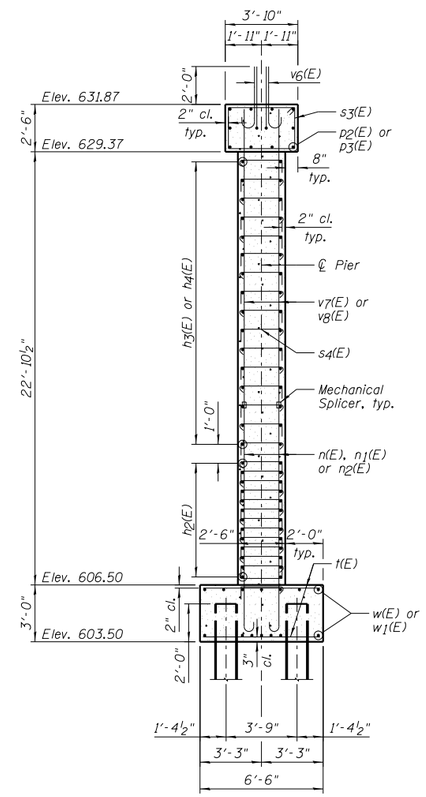

END VIEW

PIER NO. 3
BILL OF MATERIAL

Bar	No.	Size	Length	Shape
h2(E)	52	#6	17'-3"	
h3(E)	32	#6	20'-7"	
h4(E)	32	#6	22'-7"	
n(E)	50	#6	10'-5"	
n1(E)	46	#6	12'-5"	
n2(E)	88	#6	11'-8"	
p2(E)	10	#5	21'-3"	
p3(E)	10	#5	23'-3"	
s3(E)	44	#4	12'-1"	
s4(E)	690	#4	3'-3"	
t(E)	98	#6	6'-2"	
u2(E)	26	#6	12'-3"	
u3(E)	32	#6	14'-3"	
u4(E)	6	#5	12'-7"	
v6(E)	30	#8	4'-2"	
v7(E)	50	#6	17'-10"	
v8(E)	46	#6	15'-10"	
w(E)	14	#5	22'-11"	
w1(E)	14	#5	24'-11"	

Item	Unit	Quantity
Structure Excavation	Cu. Yd.	146
Concrete Structures	Cu. Yd.	148.7
Reinforcement Bars, Epoxy Coated	Pound	14,540
Furnishing Steel Piles HP14x89	Foot	1,680
Driving Piles	Foot	1,680

PILE DATA:

Pile Type and Size	Steel - HP14x89
Nominal Required Bearing	495 kips
Factored Resistance Available	257 kips
Estimated Pile Length	84 Feet
Number of Production Piles	20
Number of Test Piles	0

NOTES:

1.) Pour steps monolithically with cap.
2.) E.F. denotes Each Face and E.E. denotes Each End.
3.) See Sheet B27 for Section A-A, Footing Plan and details.
4.) See Sheet B29 for Bar Splicer Details.
5.) *Limits of plastic hinging region. Splicing of reinforcement will not be allowed in this region.
6.) Space reinforcement in caps to miss anchor bolts.

Farnsworth GROUP, INC.
2709 McGraw Drive
Bloomington, Illinois 61704
309/663-8435, 309/663-1571 fax

	DESIGNED - JML	REVISED
	CHECKED - MSW	REVISED
	DRAWN - DJM	REVISED
DATE - 04/10/14	CHECKED - MSW	REVISED

STATE OF ILLINOIS
DEPARTMENT OF TRANSPORTATION

PIER NO. 3
STRUCTURE NO. 038-0219

SHEET NO. B26 OF 34 SHEETS

F.A.P. RTE.	SECTION	COUNTY	TOTAL SHEETS	SHEET NO.
332	(3)BR	IROQUOIS	100	57

CONTRACT NO. 66736

ILLINOIS FED. AID PROJECT

24-8052

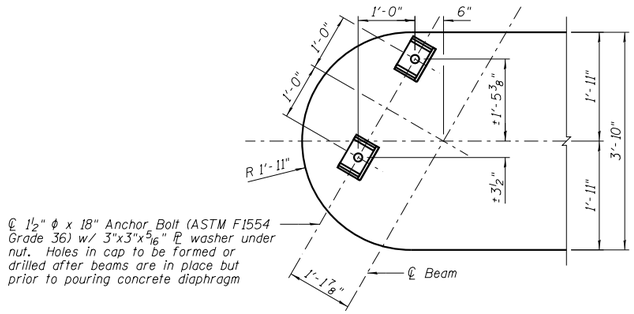

TYPICAL ANCHOR BOLT PLACEMENT DETAIL

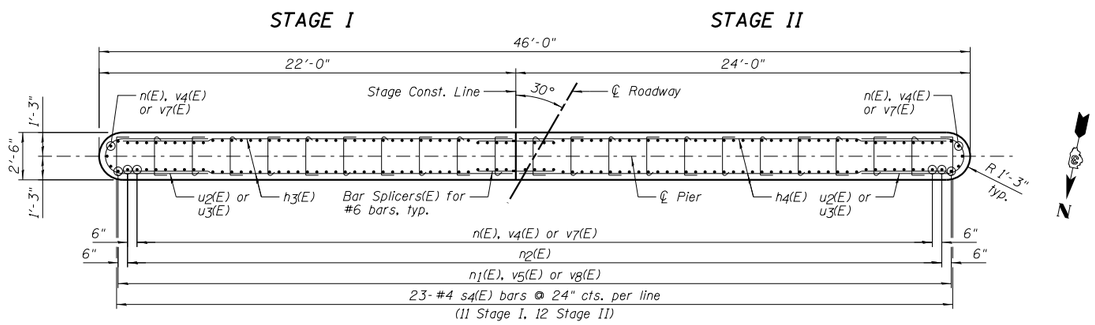

SECTION A-A

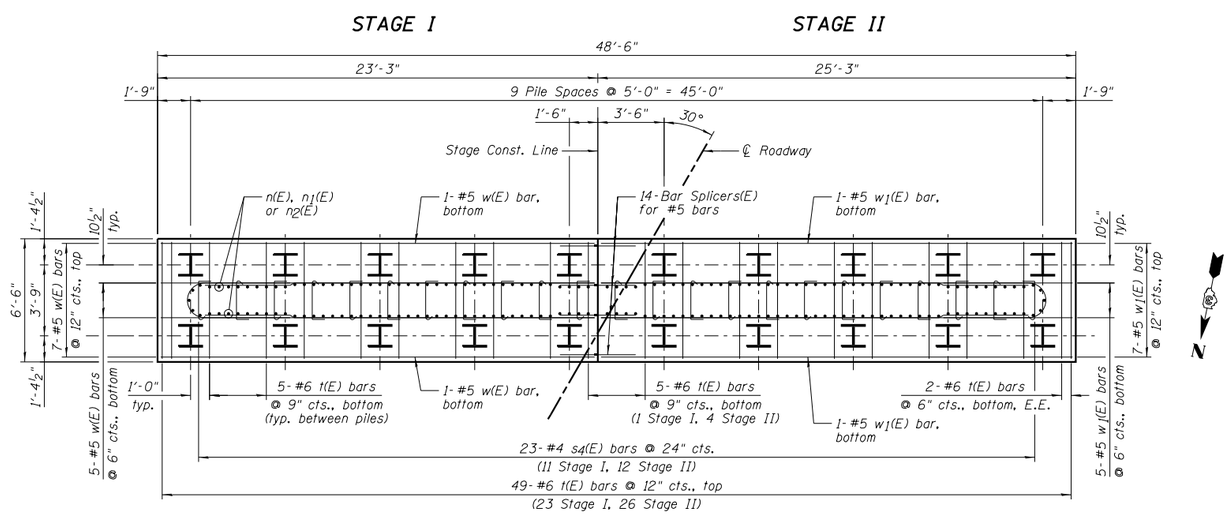

FOOTING PLAN

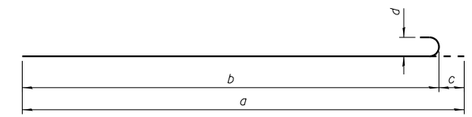

n(E) BARS

Bar	a	b	c	d
n(E)	10'-5"	9'-9"	8"	6"
n1(E)	12'-5"	11'-9"	8"	6"
n2(E)	11'-8"	11'-0"	8"	6"

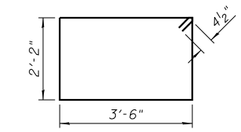

s3(E) BAR

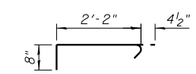

s4(E) BAR

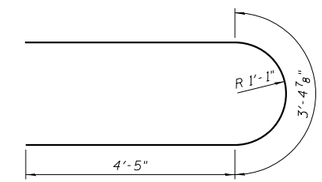

u2(E) BAR

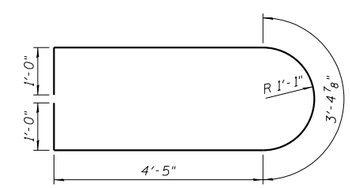

u3(E) BAR

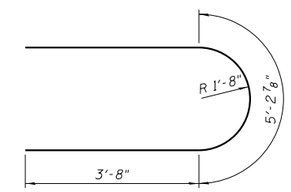

u4(E) BAR

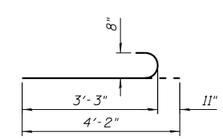

v6(E) BAR

NOTES:

1.) E.E. denotes Each End.
2.) See Sheets B24 thru B26 for location of Section A-A.
3.) See Sheet B29 for Bar Splicer Details.

Farnsworth GROUP, INC.
2709 McGraw Drive
Bloomington, Illinois 61704
309/663-8435, 309/663-1571 fax

	DESIGNED - JML	REVISED
	CHECKED - MSW	REVISED
	DRAWN - DJM	REVISED
DATE - 04/10/14	CHECKED - MSW	REVISED

STATE OF ILLINOIS
DEPARTMENT OF TRANSPORTATION

PIER DETAILS
STRUCTURE NO. 038-0219

SHEET NO. B27 OF 34 SHEETS

F.A.P. RTE.	SECTION	COUNTY	TOTAL SHEETS	SHEET NO.
332	(3)BR	IROQUOIS	100	58

CONTRACT NO. 66736

ILLINOIS FED. AID PROJECT

24-8052

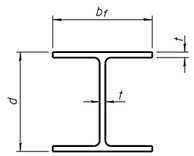

STEEL PILE TABLE

Designation	Depth d	Flange width b_f	Web and Flange thickness t	Encasement diameter A
HP 14x117	14 1/4"	14 7/8"	13/16"	30"
x102	14"	14 3/4"	11/16"	30"
x89	13 7/8"	14 3/4"	5/8"	30"
x73	13 5/8"	14 5/8"	1/2"	30"
HP 12x84	12 1/4"	12 1/4"	11/16"	24"
x74	12 1/8"	12 1/4"	5/8"	24"
x63	12"	12 1/8"	1/2"	24"
x53	11 3/4"	12"	7/16"	24"
HP 10x57	10"	10 1/4"	9/16"	24"
x42	9 3/4"	10 1/8"	7/16"	24"
HP 8x36	8"	8 1/8"	7/16"	18"

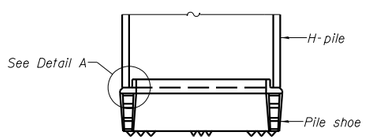

ELEVATION

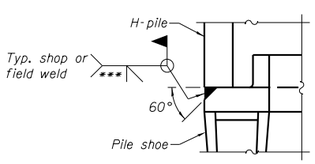

DETAIL A

H-PILE SHOE ATTACHMENT

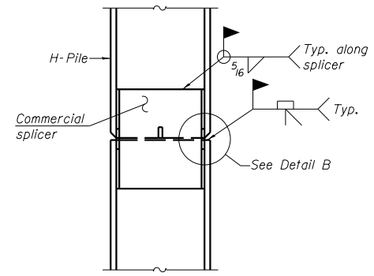

ELEVATION

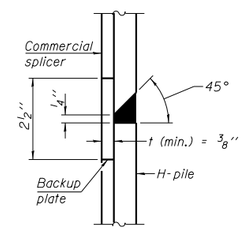

DETAIL "B"

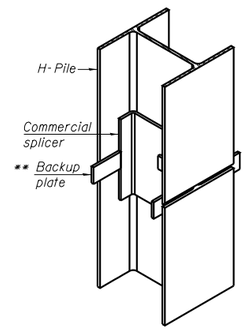

ISOMETRIC VIEW

WELDED COMMERCIAL SPLICE

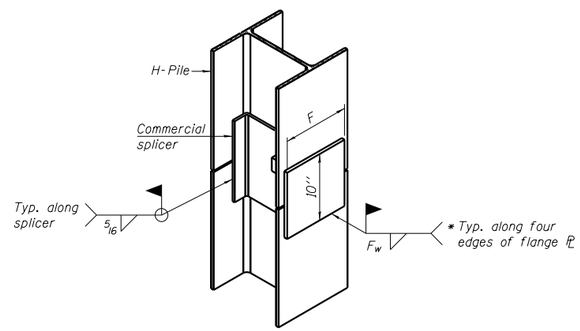

ISOMETRIC VIEW

WELDED COMMERCIAL SPLICE ALTERNATE

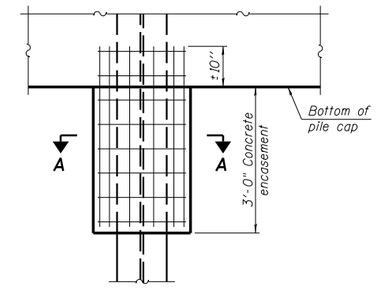

ELEVATION

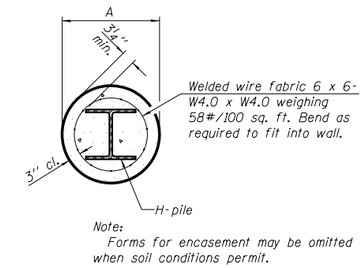

SECTION A-A

PILE ENCASEMENT

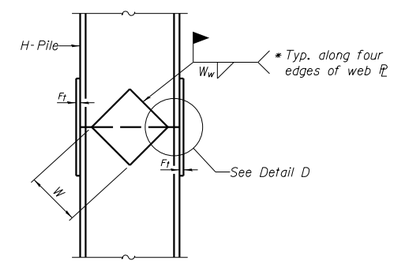

ELEVATION

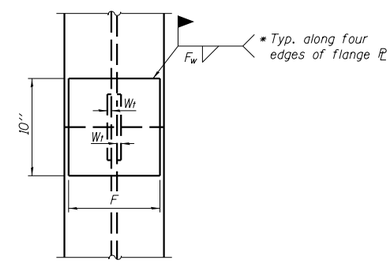

END VIEW

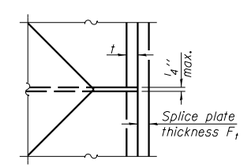

DETAIL D

Designation	F	F_t	F_w	W	W_t	W_w
HP 14x117	12 1/2"	1"	7/8"	7 3/4"	5/8"	1/2"
x102	12 1/2"	7/8"	3/4"	7 3/4"	5/8"	1/2"
x89	12 1/2"	3/4"	11/16"	7 3/4"	5/8"	1/2"
x73	12 1/2"	5/8"	9/16"	7 3/4"	5/8"	1/2"
HP 12x84	10"	7/8"	11/16"	6 1/2"	5/8"	1/2"
x74	10"	7/8"	11/16"	6 1/2"	5/8"	1/2"
x63	10"	5/8"	1/2"	6 1/2"	1/2"	3/8"
x53	10"	5/8"	1/2"	6 1/2"	1/2"	3/8"
HP 10x57	8"	3/4"	9/16"	5 1/4"	1/2"	3/8"
x42	8"	5/8"	9/16"	5 1/4"	1/2"	3/8"
HP 8x36	7"	5/8"	7/16"	4 1/4"	1/2"	3/8"

WELDED PLATE FIELD SPLICE

* Interrupt welds 1/4" from end of web and/or each flange.

** Remove portions of backup plates that extend outside the flanges.

*** Weld size per pile shoe manufacturer (5/16" min.).

Note:
The steel H-piles shall be according to AASHTO M270 Grade 50.

F-HP 1-27-12

Farnsworth GROUP, INC.
2709 McGraw Drive
Bloomington, Illinois 61704
309/663-8435, 309/663-1571 fax

	DESIGNED - JML	REVISED
	CHECKED - MSW	REVISED
	DRAWN - DJM	REVISED
DATE - 04/10/14	CHECKED - MSW	REVISED

STATE OF ILLINOIS
DEPARTMENT OF TRANSPORTATION

HP PILE DETAILS
STRUCTURE NO. 038-0219
SHEET NO. B28 OF 34 SHEETS

F.A.P. RTE.	SECTION	COUNTY	TOTAL SHEETS	SHEET NO.
332	(3)BR	IROQUOIS	100	59

CONTRACT NO. 66736
ILLINOIS FED. AID PROJECT

24-8052

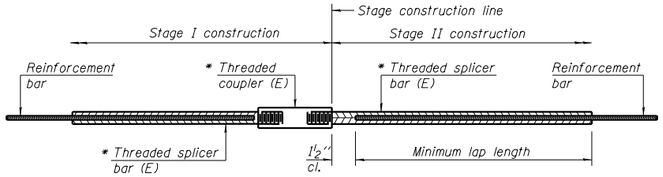

STANDARD BAR SPLICER ASSEMBLY

Minimum Lap Lengths						
Bar size to be spliced	Table 1	Table 2	Table 3	Table 4	Table 5	Table 6
3, 4	1'-5"	1'-11"	2'-1"	2'-4"	2'-7"	2'-11"
5	1'-9"	2'-5"	2'-7"	2'-11"	3'-3"	3'-8"
6	2'-1"	2'-11"	3'-1"	3'-6"	3'-10"	4'-5"
7	2'-9"	3'-10"	4'-2"	4'-8"	5'-2"	5'-10"
8	3'-8"	5'-1"	5'-5"	6'-2"	6'-9"	7'-8"
9	4'-7"	6'-5"	6'-10"	7'-9"	8'-7"	9'-8"

Table 1: Black bar, 0.8 Class C
Table 2: Black bar, Top bar lap, 0.8 Class C
Table 3: Epoxy bar, 0.8 Class C
Table 4: Epoxy bar, Top bar lap, 0.8 Class C
Table 5: Epoxy bar, Class C
Table 6: Epoxy bar, Top bar top, Class C

Threaded splicer bar length = min. lap length + 1½" + thread length

* Epoxy not required on Bar Splicer Assembly components used in conjunction with black bars.

Location	Bar size	No. assemblies required	Table for minimum lap length
Top of Slab	#5	636	Table 3
Bottom of Slab	#5	460	Table 3
North Diaphragm	#6	5	Table 4
South Diaphragm	#6	5	Table 4
North Approach	#4	25	Table 4
North Approach	#5	86	Table 3
South Approach	#4	25	Table 4
South Approach	#5	86	Table 3
North Abutment	#7	10	Table 4
Pier No. 1	#5	24	Table 4
Pier No. 1	#6	50	Table 4
Pier No. 2	#5	24	Table 4
Pier No. 2	#6	50	Table 4
Pier No. 3	#5	24	Table 4
Pier No. 3	#6	32	Table 4
South Abutment	#7	10	Table 4

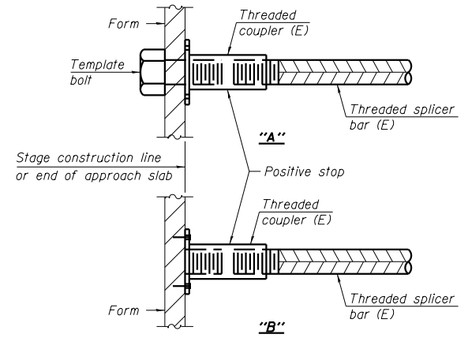

INSTALLATION AND SETTING METHODS

"A" : Set bar splicer assembly by means of a template bolt.
"B" : Set bar splicer assembly by nailing to wood forms or cementing to steel forms.
(E) : Indicates epoxy coating.

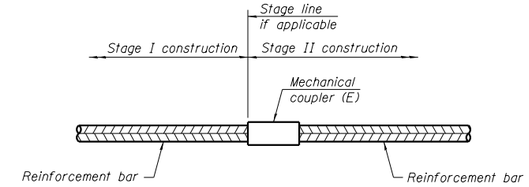

STANDARD MECHANICAL SPLICER

Location	Bar size	No. assemblies required
Pier No. 1	#6	174
Pier No. 2	#6	174
Pier No. 3	#6	174

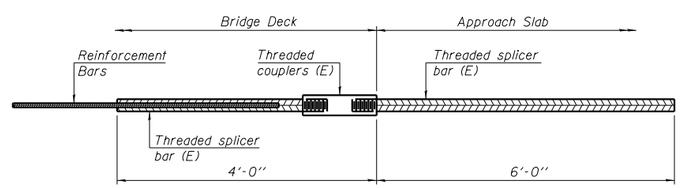

BAR SPLICER ASSEMBLY FOR #5 BAR ON INTEGRAL OR SEMI-INTEGRAL ABUTMENTS

No. required = 86

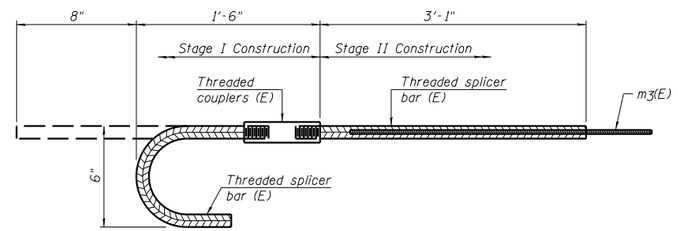

BAR SPLICER ASSEMBLY FOR #6 BAR IN ABUTMENT DIAPHRAGMS

No. required = 4

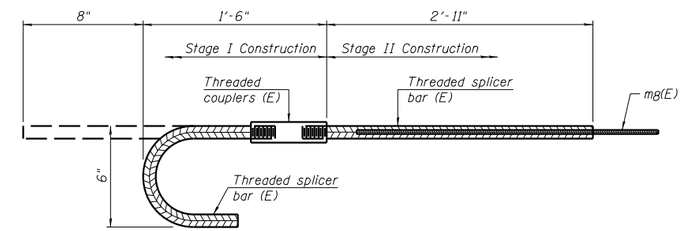

BAR SPLICER ASSEMBLY FOR #6 BAR IN PIER DIAPHRAGMS

No. required = 12

NOTES

Splicer bars shall be deformed with threaded ends and have a minimum 60 ksi yield strength.

All reinforcement shall be lapped and tied to the splicer bars.

Bar splicer assemblies shall be epoxy coated according to the requirements for reinforcement bars. See Section 508 of the Standard Specifications.

See approved list of bar splicer assemblies and mechanical splicers for alternatives.

Farnsworth GROUP, INC.
2709 McGraw Drive
Bloomington, Illinois 61704
309/663-8435, 309/663-1571 fax

	DESIGNED - JML	REVISED
	CHECKED - MSW	REVISED
	DRAWN - DJM	REVISED
DATE - 04/10/14	CHECKED - MSW	REVISED

STATE OF ILLINOIS
DEPARTMENT OF TRANSPORTATION

BAR SPLICER ASSEMBLY AND MECHANICAL SPLICER DETAILS
STRUCTURE NO. 038-0219

SHEET NO. B29 OF 34 SHEETS

F.A.P. RTE.	SECTION	COUNTY	TOTAL SHEETS	SHEET NO.
332	(3)BR	IROQUOIS	100	60

CONTRACT NO. 66736

ILLINOIS FED. AID PROJECT

24-8052

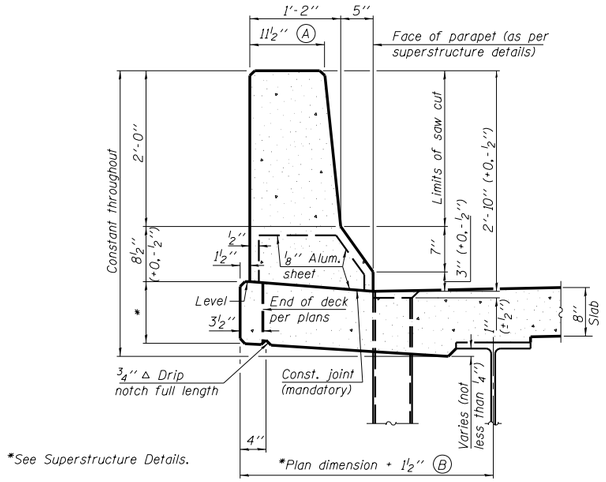

34" F SHAPE PARAPET SECTION

(Showing dimensions)

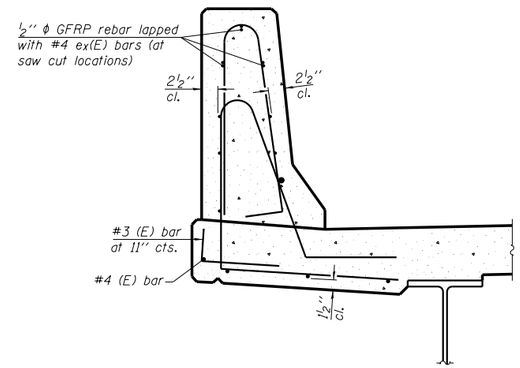

SECTION

(34" parapet shown - 42" parapet similar)
(Showing reinforcement clearances for slip forming and additional reinforcement bars)

GENERAL NOTES

All dimensions shall remain the same as shown on superstructure details, except dimensions A and B which are to be revised as shown to provide additional clearance. Additional concrete needed to revise dimension A and B = 0.0165 cu. yds./ft. for 34" parapet or = 0.0223 cu. yds./ft. for 42" parapet.

Place aluminum sheet in curb portion at and near piers. Full thickness saw cut at all joint locations in lieu of cork joint filler.

Steel superstructure shown. Other superstructure types similar.

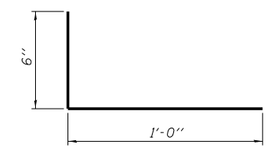

#3 (E) BAR

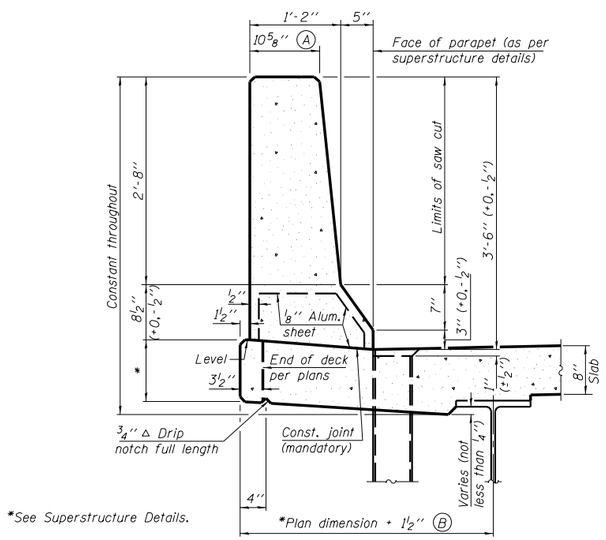

42" F SHAPE PARAPET SECTION

(Showing dimensions)

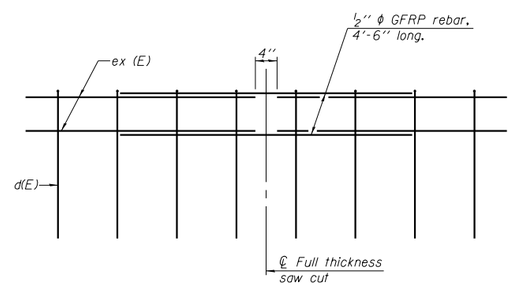

GFRP REBAR STIFFENING DETAIL

(Place as shown in parapet section at each parapet joint location.)

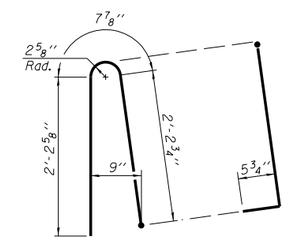

ALTERNATE BAR d(E)

(For 34" parapet when conduit is present)

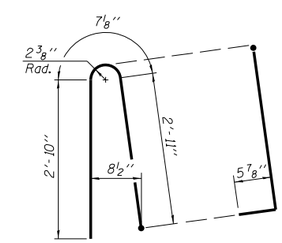

ALTERNATE BAR d(E)

(For 42" parapet when conduit is present)

SFP 34-42 8-16-12

Farnsworth GROUP, INC.
2709 McGraw Drive
Bloomington, Illinois 61704
309/663-8435, 309/663-1571 fax

	DESIGNED - JML	REVISED
	CHECKED - MSW	REVISED
	DRAWN - DJM	REVISED
DATE - 04/10/14	CHECKED - MSW	REVISED

STATE OF ILLINOIS
DEPARTMENT OF TRANSPORTATION

CONCRETE PARAPET SLIPFORMING OPTION
STRUCTURE NO. 038-0219

SHEET NO. B30 OF 34 SHEETS

F.A.P. RTE.	SECTION	COUNTY	TOTAL SHEETS	SHEET NO.
332	(3)BR	IROQUOIS	100	61
		CONTRACT NO. 66736		
	ILLINOIS	FED. AID PROJECT		

24-8052

Illinois Department of Transportation
Division of Highways
District #3, Ottawa

SOIL BORING LOG

Page 1 of 3

Date 9/23/05

ROUTE IL 1 DESCRIPTION IL 1 over Iroquois River LOGGED BY Larry Myers

SECTION 3-BR LOCATION IL 1: 6.9 mi S of US 52, SEC. 29, TWP. 27N, RNG. 12W, 2nd PM

COUNTY Iroquois DRILLING METHOD Hollow Stem Auger HAMMER TYPE CME automatic

STRUCT. NO. 038-0021
Station 25+13

BORING NO. #1: N Abut: E Side
Station 23+36
Offset 38.00ft Lt
Ground Surface Elev. 620.99 ft

Surface Water Elev. 599.90 ft
Stream Bed Elev. ft

Groundwater Elev.:
First Encounter ft
Upon Completion 593.0 ft
After 48 Hrs. 606.5 ft

Description	Elev.	DEPTH (ft)	BLOWS (/6")	UCS Qu (tsf)	MOIST (%)
Augered, brown, Silty Clay fill					
	618.49				
Hard, brown, Sandy Loam/Clay/Silty Loam fill with Concrete Debris at 4'			4		
			7	4.5	19.7
			6	P	
	615.99	-5			
Loose, brown, fine to course, Sand			3		
			3	no	
			4	sample	
			3		
			3		12.1
			2		
	610.99	-10			
Very stiff, brown to gray, Silty Clay with Silty Loam seams			2		
			5	3.0	21.2
			5	P	
	608.99				
Stiff, gray, Clay with layers of Silty Clay and Silt			2		
			4	1.7	23.5
			5	S	
		-15			
			2		
			3	1.5	19.8
			3	S	
	603.99				
Medium, gray, Silty Clay with minor layers of gray, Silt			2		
			3	0.9	24.3
			3	B	
		-20			
Medium, gray, Silty Clay with minor layers of gray, Silt *(continued)*			2		
			2	0.9	24.1
			3	B	
			2		
			3	0.9	25.8
			3	B	
		-25			
			2		
			2	0.9	24.2
			3	B	
			1		
			2	0.7	31.7
			3	S	
	591.49				
Stiff, gray, Clay		-30	1		
			2	1.2	
			4	B	
	588.99				
Stiff, gray, Clay Till			4		
			7	2.0	19.5
			9	S	
		-35	3		
			3	1.0	16.4
			4	B	
			2		
			6	1.8	19.4
			7	B	
		-40			

The Unconfined Compressive Strength (UCS) Failure Mode is indicated by (B-Bulge, S-Shear, P-Penetrometer)
The SPT (N value) is the sum of the last two blow values in each sample zone (AASHTO T206)

BBS, from 137 (Rev. 8-99)

Illinois Department of Transportation
Division of Highways
District #3, Ottawa

SOIL BORING LOG

Page 2 of 3

Date 9/23/05

ROUTE IL 1 DESCRIPTION IL 1 over Iroquois River LOGGED BY Larry Myers

SECTION 3-BR LOCATION IL 1: 6.9 mi S of US 52, SEC. 29, TWP. 27N, RNG. 12W, 2nd PM

COUNTY Iroquois DRILLING METHOD Hollow Stem Auger HAMMER TYPE CME automatic

STRUCT. NO. 038-0021
Station 25+13

BORING NO. #1: N Abut: E Side
Station 23+36
Offset 38.00ft Lt
Ground Surface Elev. 620.99 ft

Surface Water Elev. 599.90 ft
Stream Bed Elev. ft

Groundwater Elev.:
First Encounter ft
Upon Completion 593.0 ft
After 48 Hrs. 606.5 ft

Description	Elev.	DEPTH (ft)	BLOWS (/6")	UCS Qu (tsf)	MOIST (%)
Stiff, gray, Clay Till *(continued)*			1		
			3	1.0	18.5
			4	B	
			1		
			4	1.6	20.6
			5	B	
		-45			
			2		
			4	1.4	19.2
			6	B	
	573.99				
Stiff, gray, Silty Clay Loam Till			2		
			4	1.4	18.3
			7	B	
		-50			
			2		
			5	1.5	18.0
			7	B	
			2		
			7	1.8	18.2
			8	B	
		-55			
			2		
			5	1.4	12.3
			5	B	
			3		
			5	1.4	22.8
			7	B	
		-60			
Stiff, gray, Silty Clay Loam Till *(continued)*			3		
			6	1.6	18.9
			7	B	
	558.99				
Stiff, gray, Clay with minor sporadic (<6" thick) layers of varved, Clay from 67.5 ft to 73.5 ft			1		
			3	1.0	33.3
			4	S	
		-65			
			1		
			2	1.2	32.7
			4	S	
			1		
			4	1.5	33.9
			4	S	
		-70			
			1		
			4	1.5	30.9
			4	S	
			2		
			2	1.2	26.9
			5	S	
	546.99				
Stiff, gray, Clay/Silty Clay/Silt layers with some varved, Clay		-75	2		
			5	1.5	22.5
			6	P	
	543.99				
Stiff, gray ,Silt with minor, Clay Minor Silty Clay Till layers at 83.5'			WR		
			2	1.5	23.2
			2	P	
WR- weight of rods					
82.5-84': 1.5 P was estimated, high blow count was due to Silt blow in		-80			

The Unconfined Compressive Strength (UCS) Failure Mode is indicated by (B-Bulge, S-Shear, P-Penetrometer)
The SPT (N value) is the sum of the last two blow values in each sample zone (AASHTO T206)

BBS, from 137 (Rev. 8-99)

Illinois Department of Transportation
Division of Highways
District #3, Ottawa

SOIL BORING LOG

Page 3 of 3

Date 9/23/05

ROUTE IL 1 DESCRIPTION IL 1 over Iroquois River LOGGED BY Larry Myers

SECTION 3-BR LOCATION IL 1: 6.9 mi S of US 52, SEC. 29, TWP. 27N, RNG. 12W, 2nd PM

COUNTY Iroquois DRILLING METHOD Hollow Stem Auger HAMMER TYPE CME automatic

STRUCT. NO. 038-0021
Station 25+13

BORING NO. #1: N Abut: E Side
Station 23+36
Offset 38.00ft Lt
Ground Surface Elev. 620.99 ft

Surface Water Elev. 599.90 ft
Stream Bed Elev. ft

Groundwater Elev.:
First Encounter ft
Upon Completion 593.0 ft
After 48 Hrs. 606.5 ft

Description	Elev.	DEPTH (ft)	BLOWS (/6")	UCS Qu (tsf)	MOIST (%)
Stiff, gray ,Silt with minor, Clay Minor Silty Clay Till layers at 83.5'			WR		
			2	1.5	25.3
			6	P	
WR- weight of rods					
82.5-84': 1.5 P was estimated, high blow count was due to Silt blow in *(continued)*			20		
			40	1.5	16.6
			50	P	
		-85			
			22		
	535.49				
Hard, gray, Silty Loam Till			100/5"		
				4.0	12.3
				P	
			100		
			100/1"	>4.5	8.2
				P	
		-90			
			100/3"		
				>4.5	13.3
				P	
	528.49				
Very stiff, green gray, Silty Clay Till with small, Silt pockets					
		-95	8		
			16	2.6	22.9
			20	S	
		-100			
	520.49				
Hard, gray, Silty Clay Till			17		18.4
	519.49				
End of Boring			25	4.7	13.0
			32	S	
		-105			
		-110			
		-115			
		-120			

The Unconfined Compressive Strength (UCS) Failure Mode is indicated by (B-Bulge, S-Shear, P-Penetrometer)
The SPT (N value) is the sum of the last two blow values in each sample zone (AASHTO T206)

BBS, from 137 (Rev. 8-99)

Farnsworth GROUP, INC.
2709 McGraw Drive
Bloomington, Illinois 61704
309/663-8435, 309/663-1571 fax

	DESIGNED - JML	REVISED
	CHECKED - MSW	REVISED
	DRAWN - DJM	REVISED
DATE - 04/10/14	CHECKED - MSW	REVISED

STATE OF ILLINOIS
DEPARTMENT OF TRANSPORTATION

SOIL BORING LOGS
STRUCTURE NO. 038-0219

SHEET NO. B31 OF 34 SHEETS

F.A.P. RTE.	SECTION	COUNTY	TOTAL SHEETS	SHEET NO.
332	(3)BR	IROQUOIS	100	62

CONTRACT NO. 66736

ILLINOIS FED. AID PROJECT

24-8052

Illinois Department of Transportation
Division of Highways
District #3, Ottawa

SOIL BORING LOG

Page 1 of 3

Date 9/27/05

ROUTE IL 1 DESCRIPTION IL 1 over Iroquois River LOGGED BY Larry Myers

SECTION 3-BR LOCATION IL 1: 6.9 mi S of US 52, SEC. 29, TWP. 27N, RNG. 12W, 2nd PM

COUNTY Iroquois DRILLING METHOD Hollow Stem Auger HAMMER TYPE CME automatic

STRUCT. NO. 038-0021
Station 25+13

BORING NO. #2: S Abut: W Side
Station 27+09
Offset 12.00ft Rt
Ground Surface Elev. 626.78 ft

Surface Water Elev. 599.90 ft
Stream Bed Elev. ft

Groundwater Elev.:
First Encounter ft
Upon Completion 596.8 ft ▽
After Hrs. ft

Description	Elev.	DEPTH (ft)	BLOWS (/6")	UCS Qu (tsf)	MOIST (%)
Augered, bituminous, Sand & Gravel and brown, Sandy Clay Loam fill					
			2		
			4	2.5	13.1
			3	P	
Very stiff, brown, Sandy Loam to Sandy Clay Loam fill	624.28				
			5	4.0	15.9
			6	P	
Very stiff, gray black, Silty Clay fill	621.78	-5			
			2		
			4	3.5	19.7
			4	P	
		-10			
			2		
			3	2.5	21.6
			4	P	
			2		
			4	2.0	15.4
			6	P	
Stiff, green brown, Sandy Loam with layers of Sandy Clay Loam, fine, Sand and Loam, some unconsolidated layers	612.78	-15			
			3		
			4	1.5	15.7
			3	P	
			2		
			3	1.0	16.2
			3	P	
Very stiff, gray, Silty Clay	607.28	-20			
Very stiff, gray, Silty Clay *(continued)*			4		
			4	2.0	19.0
			4	P	
Stiff, brown, Silty Loam/Loam with layers of fine, brown, Sand	604.78				
			2		
			2	1.0	17.8
			2	P	
		-25			
			1		
			2	1.0	11.7
			2	P	
Very loose, brown, fine, Sand with layers of Silt and Loam	599.78				
			1		
			1		24.2
			1		
			1		
Very loose, gray, fine, Sand with minor layers of Silt and Organics (Wood), minor layers of course, Sand	596.78 ▽	-30			
			1		
			1		29.9
			1		
			2		
			2		23.0
			2		
		-35			
			2		
Medium, gray, Clay	591.28				
			2	0.5	33.9
			2	S	
			2		
			4	0.8	31.9
			5	S	
	587.28	-40			

The Unconfined Compressive Strength (UCS) Failure Mode is indicated by (B-Bulge, S-Shear, P-Penetrometer)
The SPT (N value) is the sum of the last two blow values in each sampling zone (AASHTO T206)

BBS, from 137 (Rev. 8-99)

Illinois Department of Transportation
Division of Highways
District #3, Ottawa

SOIL BORING LOG

Page 2 of 3

Date 9/27/05

ROUTE IL 1 DESCRIPTION IL 1 over Iroquois River LOGGED BY Larry Myers

SECTION 3-BR LOCATION IL 1: 6.9 mi S of US 52, SEC. 29, TWP. 27N, RNG. 12W, 2nd PM

COUNTY Iroquois DRILLING METHOD Hollow Stem Auger HAMMER TYPE CME automatic

STRUCT. NO. 038-0021
Station 25+13

BORING NO. #2: S Abut: W Side
Station 27+09
Offset 12.00ft Rt
Ground Surface Elev. 626.78 ft

Surface Water Elev. 599.90 ft
Stream Bed Elev. ft

Groundwater Elev.:
First Encounter ft
Upon Completion 596.8 ft ▽
After Hrs. ft

Description	Elev.	DEPTH (ft)	BLOWS (/6")	UCS Qu (tsf)	MOIST (%)
Very stiff, gray, Clay with minor Silt seams *(continued)*			4		
			5	2.4	23.5
			7	S	
Stiff, gray, Clay with some Silt seams	584.78				
			4		
			5	1.2	29.3
			7	S	
Medium, gray, Silty Clay	581.78	-45			
			2		
			3	0.9	25.2
			3	S	
Medium to stiff, gray, Silty Clay Loam/Clay Loam Till with pockets of course, Sand	579.78				
			1		
			2	0.5	18.7
			2	B	
		-50			
			2		
			2	1.0	13.2
			4	P	
			1		
			4	1.3	18.5
			4	B	
		-55			
			2		
			4	0.8	19.7
			4	B	
Stiff, gray, Silty Clay Till	569.78				
			3		
			5	1.4	22.2
			8	B	
		-60			
Stiff, gray, Silty Clay Till *(continued)*			2		
			4	1.8	20.5
			6	B	
Stiff, gray, Clay with minor Silt seams- somewhat varved	563.78				
			1		
			3	1.4	33.1
			4	S	
Medium to stiff, gray, Clay	559.78				
			1		
			3	0.8	34.9
			4	S	
		-70			
			1		
			2	0.9	33.7
			3	S	
			1		
			2	0.9	32.0
			3	S	
		-75			
			2		
			3	1.0	37.2
			4	S	
			1		
			3	1.3	32.1
			5	S	
		-80			

The Unconfined Compressive Strength (UCS) Failure Mode is indicated by (B-Bulge, S-Shear, P-Penetrometer)
The SPT (N value) is the sum of the last two blow values in each sampling zone (AASHTO T206)

BBS, from 137 (Rev. 8-99)

Illinois Department of Transportation
Division of Highways
District #3, Ottawa

SOIL BORING LOG

Page 3 of 3

Date 9/27/05

ROUTE IL 1 DESCRIPTION IL 1 over Iroquois River LOGGED BY Larry Myers

SECTION 3-BR LOCATION IL 1: 6.9 mi S of US 52, SEC. 29, TWP. 27N, RNG. 12W, 2nd PM

COUNTY Iroquois DRILLING METHOD Hollow Stem Auger HAMMER TYPE CME automatic

STRUCT. NO. 038-0021
Station 25+13

BORING NO. #2: S Abut: W Side
Station 27+09
Offset 12.00ft Rt
Ground Surface Elev. 626.78 ft

Surface Water Elev. 599.90 ft
Stream Bed Elev. ft

Groundwater Elev.:
First Encounter ft
Upon Completion 596.8 ft ▽
After Hrs. ft

Description	Elev.	DEPTH (ft)	BLOWS (/6")	UCS Qu (tsf)	MOIST (%)
Medium to stiff, gray, Clay *(continued)*			3		
			3	1.5	29.2
			5	S	
Stiff, gray, Silty Clay Till with layers of Silt and Clay, very stiff after 86'	544.78				
			2		
			5	1.3	22.5
			6	S	
		-85			
			6		
			8	1.0	23.1
			8	S	
	538.78		27		9.3
Hard, gray, Silty Clay Loam/Silty Loam Till with Silt layers			37	>4.5	26.1
			47	P	
		-90			
			35		
			80	4.8	9.6
			100/2"	S	
			100		
			100/4"	>4.5	11.5
				P	
		-95			
			27		
			30	5.8	14.5
	530.28		38	S	
Hard, gray, Silty Clay with Silt seams					
			15		
			30	7.8	15.6
	527.78		32	S	
End of Boring		-100			

The Unconfined Compressive Strength (UCS) Failure Mode is indicated by (B-Bulge, S-Shear, P-Penetrometer)
The SPT (N value) is the sum of the last two blow values in each sampling zone (AASHTO T206)

BBS, from 137 (Rev. 8-99)

Illinois Department of Transportation
Division of Highways
District #3, Ottawa

SOIL BORING LOG

Date 10/13/05

ROUTE IL 1 DESCRIPTION IL 1 over Iroquois River LOGGED BY Larry Myers

SECTION 3-BR LOCATION IL 1: 6.9 mi S of US 52, SEC. 29, TWP. 27N, RNG. 12W, 2nd PM

COUNTY Iroquois DRILLING METHOD Hollow Stem Auger HAMMER TYPE CME automatic

STRUCT. NO. 038-0021
Station 25+13

BORING NO. #3: S Pier: E Side
Station 25+92
Offset 34.00ft Lt
Ground Surface Elev. 605.35 ft

Surface Water Elev. 599.90 ft
Stream Bed Elev. ft

Groundwater Elev.:
First Encounter 595.9 ft ▼
Upon Completion ft
After Hrs. ft

Description	DEPTH (ft)	BLOWS (/6")	UCS Qu (tsf)	MOIST (%)
Augered, brown, Silty clay				
603.35				
Stiff, brown, Silty Clay/Silty Loam		3		
		3	1.5	
		3	P	
	-5	3		
		3	1.8	16.3
		3	P	
598.85				
Very loose, brown, fine to coarse, Sand with free water @ 9.5'		1		
		2		7.4
		2		
▼	-10	2		
		1		22.1
		3		
593.85				
Medium, brown, fine to coarse, Sand with layers of Silt		3		
		5		32.3
		7		
591.35				
Very loose, brown, fine to coarse, Sand/Silty Clay/Silt layers with organic (trees)- backwater deposits	-15	1		
		1		20.7
		1		
587.85				
Medium, gray, Clay, with layers of Silty Clay/Silty Clay Loam Till		1	0.5	25.3
		2	S	
585.85				
	-20	3		

Description	DEPTH (ft)	BLOWS (/6")	UCS Qu (tsf)	MOIST (%)
Very stiff, gray, Clay/Silty Clay with Silt seams *(continued)*		5	2.2	24.6
		6	S	
583.85				
Stiff, gray, Clay/Silty Clay/Silt layers		4		
		5	1.7	24.9
		6	S	
	-25	2		
		3	1.1	18.4
		3	S	
578.85				
Stiff to medium, gray, Clay Till		2		
wh- with hammer weight		3	1.4	21.5
		4	B	
	-30	2		
		3	1.4	23.0
		3	B	
		2		
		3	0.8	18.5
		4	S	
	-35	wh		
		2	0.8	24.6
		3	S	
		3		
		4	1.2	19.4
		5	B	
	-40	3		

The Unconfined Compressive Strength (UCS) Failure Mode is indicated by (B-Bulge, S-Shear, P-Penetrometer)
The SPT (N value) is the sum of the last two blow values in each sampling zone (AASHTO T206)

BBS, from 137 (Rev. 8-99)

Illinois Department of Transportation
Division of Highways
District #3, Ottawa

SOIL BORING LOG

Date 10/13/05

ROUTE IL 1 DESCRIPTION IL 1 over Iroquois River LOGGED BY Larry Myers

SECTION 3-BR LOCATION IL 1: 6.9 mi S of US 52, SEC. 29, TWP. 27N, RNG. 12W, 2nd PM

COUNTY Iroquois DRILLING METHOD Hollow Stem Auger HAMMER TYPE CME automatic

STRUCT. NO. 038-0021
Station 25+13

BORING NO. #3: S Pier: E Side
Station 25+92
Offset 34.00ft Lt
Ground Surface Elev. 605.35 ft

Surface Water Elev. 599.90 ft
Stream Bed Elev. ft

Groundwater Elev.:
First Encounter 595.9 ft ▼
Upon Completion ft
After Hrs. ft

Description	DEPTH (ft)	BLOWS (/6")	UCS Qu (tsf)	MOIST (%)
Stiff to medium, gray, Clay Till		4	1.1	25.7
wh- with hammer weight *(continued)*		5	B	
563.85				
Stiff to medium, gray, Clay with minor seams of Silt (non-uniform)- varved clay		3		
		4	1.2	13.0
		4	S	
	-45	1		
		3	1.0	35.8
		3	S	
		wh		
		1	0.5	38.8
		3	S	
	-50	wh		
		2	0.9	36.1
		3	S	
		2		
		3	0.6	35.5
		4	S	
	-55	1		
		3	0.6	35.6
		4	S	
		2		
		3	1.1	36.8
		4	S	
	-60	2		

Description	DEPTH (ft)	BLOWS (/6")	UCS Qu (tsf)	MOIST (%)
Stiff to medium, gray, Clay with minor seams of Silt (non-uniform)- varved clay *(continued)*		3	1.2	25.5
		4	S	
		2		
		3	1.2	30.9
		5	S	
541.35				
Medium, gray, Clay/Silt/Silty Clay	-65	wh		
		3	0.9	27.2
		3	B	
537.85		3		
Hard, gray, brittle, Silt Loam Till with layers of hard, gray, Silt		15	>4.5	10.6
		21	P	
	-70	38		
		50	5.1	10.4
		56	S	
		86		
		100/2"	>4.5	10.7
			P	
	-75	24		
		37	4.6	13.0
		100/5"	S	
528.85				
Hard, gray, Silt/Silty Clay/Clay		106		
		100/4"	4.1	16.8
			S	
	-80	32		

The Unconfined Compressive Strength (UCS) Failure Mode is indicated by (B-Bulge, S-Shear, P-Penetrometer)
The SPT (N value) is the sum of the last two blow values in each sampling zone (AASHTO T206)

BBS, from 137 (Rev. 8-99)

Illinois Department of Transportation
Division of Highways
District #3, Ottawa

SOIL BORING LOG

Date 10/13/05

ROUTE IL 1 DESCRIPTION IL 1 over Iroquois River LOGGED BY Larry Myers

SECTION 3-BR LOCATION IL 1: 6.9 mi S of US 52, SEC. 29, TWP. 27N, RNG. 12W, 2nd PM

COUNTY Iroquois DRILLING METHOD Hollow Stem Auger HAMMER TYPE CME automatic

STRUCT. NO. 038-0021
Station 25+13

BORING NO. #3: S Pier: E Side
Station 25+92
Offset 34.00ft Lt
Ground Surface Elev. 605.35 ft

Surface Water Elev. 599.90 ft
Stream Bed Elev. ft

Groundwater Elev.:
First Encounter 595.9 ft ▼
Upon Completion ft
After Hrs. ft

Description	DEPTH (ft)	BLOWS (/6")	UCS Qu (tsf)	MOIST (%)
Hard, gray, Silt/Silty Clay/Clay *(continued)*		65	4.1	16.6
		73	S	
523.35				
Very stiff, gray, Sandy Clay Loam with pockets of Silt/Clay/Silty Clay		13		
		16	2.9	20.3
		24	S	
520.85				
Dense, gray, fine to medium, Sand	-85	16		
		12		19.1
30' Blow in @ 87'- No sample- EOB		21	P	
Hole caved in @ 9.5' AAR	518.35			
End of Boring			no sample	
	-90			
	-95			
	-100			

The Unconfined Compressive Strength (UCS) Failure Mode is indicated by (B-Bulge, S-Shear, P-Penetrometer)
The SPT (N value) is the sum of the last two blow values in each sampling zone (AASHTO T206)

BBS, from 137 (Rev. 8-99)

Illinois Department of Transportation
Division of Highways
District #3, Ottawa

SOIL BORING LOG

Date 10/17/05

ROUTE IL 1 DESCRIPTION IL 1 over Iroquois River LOGGED BY Larry Myers

SECTION 3-BR LOCATION IL 1: 6.9 mi S of US 52, SEC. 29, TWP. 27N, RNG. 12W, 2nd PM

COUNTY Iroquois DRILLING METHOD Hollow Stem Auger HAMMER TYPE CME automatic

STRUCT. NO. 038-0021
Station 25+13

BORING NO. #4: C Pier: W Side
Station 25+00
Offset 25.00ft Rt
Ground Surface Elev. 604.99 ft

Surface Water Elev. 599.90 ft
Stream Bed Elev. ft

Groundwater Elev.:
First Encounter ft
Upon Completion 585.0 ft ▽
After ___ Hrs. ft

Description	Elev.	DEPTH (ft)	BLOWS (/6")	UCS Qu (tsf)	MOIST (%)
Augered, brown, Silty Clay					
	600.99				
Very stiff, brown, Silty Clay Loam/Silt Loam		-5	4		
			7	2.5	18.0
			7	P	
	598.99				
Medium, brown, Loam					
wh- with hammer weight			wh		
			1	0.8	26.7
			2	P	
	595.49		1		
Soft, gray, Loam- backwater deposits with wood		-10			
			2	0.3	24.9
			2	P	
	592.99		wh		
Soft to medium, gray, Clay					
			wh	0.3	28.3
			2	P	
			wh		
		-15	2	0.6	31.1
			3	S	
	588.49				
Stiff, gray, Clay with seams/pockets of Silt- some mild varving			3		
			4	1.5	28.4
			5	S	
	586.49				
Very stiff, gray, Silty Clay with Silt pockets			3		
		▽-20	6	2.4	23.2
Very stiff, gray, Silty Clay with Silt pockets *(continued)*	583.99		6	S	
Medium, gray, Clay/Silty Clay Till with Silt layers/pockets					
			2		
			3	0.7	30.0
			4	B	
			wh		
		-25	3	0.9	18.7
			3	B	
	578.99				
Stiff, gray, Clay/Silty Clay Till					
			3		
			4	1.6	21.9
			6	S	
			2		
		-30	3	1.2	21.7
			4	S	
			wh		
			3	1.4	19.7
			4	B	
			1		
		-35	3	1.6	20.4
			4	B	
	566.49				
Medium to stiff, gray, Clay with Silt seams- varved clay in areas			1		
		-40	2	0.7	30.6

The Unconfined Compressive Strength (UCS) Failure Mode is indicated by (B-Bulge, S-Shear, P-Penetrometer)
The SPT (N value) is the sum of the last two blow values in each sampling zone (AASHTO T206)

BBS, from 137 (Rev. 8-99)

Illinois Department of Transportation
Division of Highways
District #3, Ottawa

SOIL BORING LOG

Date 10/17/05

ROUTE IL 1 DESCRIPTION IL 1 over Iroquois River LOGGED BY Larry Myers

SECTION 3-BR LOCATION IL 1: 6.9 mi S of US 52, SEC. 29, TWP. 27N, RNG. 12W, 2nd PM

COUNTY Iroquois DRILLING METHOD Hollow Stem Auger HAMMER TYPE CME automatic

STRUCT. NO. 038-0021
Station 25+13

BORING NO. #4: C Pier: W Side
Station 25+00
Offset 25.00ft Rt
Ground Surface Elev. 604.99 ft

Surface Water Elev. 599.90 ft
Stream Bed Elev. ft

Groundwater Elev.:
First Encounter ft
Upon Completion 585.0 ft ▽
After ___ Hrs. ft

Description	Elev.	DEPTH (ft)	BLOWS (/6")	UCS Qu (tsf)	MOIST (%)
Medium to stiff, gray, Clay with Silt seams- varved clay in areas *(continued)*			3	S	
			1		
			2	1.5	34.6
			3	S	
			2		
		-45	1	0.8	35.1
			3	S	
			1		
			2	0.7	33.6
			3	S	
			1		
		-50	2	0.9	35.6
			3	S	
			1		
			3	1.1	37.0
			2	S	
			1		
		-55	2	1.2	33.4
			4	S	
	548.99				
Medium, gray, Silty Clay with pockets of Silt			2		
			3	0.7	25.1
			6	S	
	546.49				
Stiff, gray, Silt and fine, Sand with minor Clay			1		
		-60	3	1.5	26.0
Stiff, gray, Silt and fine, Sand with minor Clay *(continued)*			5	P	
			2		
			3	1.5	27.7
			3	P	
			5		
		-65	6		16.4
			9		
	538.49				
Hard, gray, brittle, Loam Till with Silt pockets			19		
			35	>4.5	10.2
			42	P	
Washed- 66.5 to 68' sample					
			41		
		-70	100/3"	>4.5	9.7
				P	
			100		
			100/1"	>4.5	8.8
				P	
			100/4"		
		-75		>4.5	10.3
				P	
			100/3"		
				>4.5	8.1
				P	
	526.49				
Hard, gray, Silty Clay Loam Till with Silt and Clay pockets/layers			17		
		-80	34	4.0	16.0

The Unconfined Compressive Strength (UCS) Failure Mode is indicated by (B-Bulge, S-Shear, P-Penetrometer)
The SPT (N value) is the sum of the last two blow values in each sampling zone (AASHTO T206)

BBS, from 137 (Rev. 8-99)

Illinois Department of Transportation
Division of Highways
District #3, Ottawa

SOIL BORING LOG

Date 10/17/05

ROUTE IL 1 DESCRIPTION IL 1 over Iroquois River LOGGED BY Larry Myers

SECTION 3-BR LOCATION IL 1: 6.9 mi S of US 52, SEC. 29, TWP. 27N, RNG. 12W, 2nd PM

COUNTY Iroquois DRILLING METHOD Hollow Stem Auger HAMMER TYPE CME automatic

STRUCT. NO. 038-0021
Station 25+13

BORING NO. #4: C Pier: W Side
Station 25+00
Offset 25.00ft Rt
Ground Surface Elev. 604.99 ft

Surface Water Elev. 599.90 ft
Stream Bed Elev. ft

Groundwater Elev.:
First Encounter ft
Upon Completion 585.0 ft ▽
After ___ Hrs. ft

Description	Elev.	DEPTH (ft)	BLOWS (/6")	UCS Qu (tsf)	MOIST (%)
Hard, gray, Silty Clay Loam Till with Silt and Clay pockets/layers *(continued)*	523.99		55	S	
Hard, gray, Sandy Clay Loam Till					
			15		
			25	5.2	13.1
			35	S	
			25		
		-85	35	>4.5	9.0
			46	P	
	518.99				
Very dense, gray, medium to coarse, Sand with very minor, Gravel			15		
			22		12.5
20' Sand blow in @ 89'			33		
	515.99				
End of Boring		-90			
		-95			
		-100			

The Unconfined Compressive Strength (UCS) Failure Mode is indicated by (B-Bulge, S-Shear, P-Penetrometer)
The SPT (N value) is the sum of the last two blow values in each sampling zone (AASHTO T206)

BBS, from 137 (Rev. 8-99)

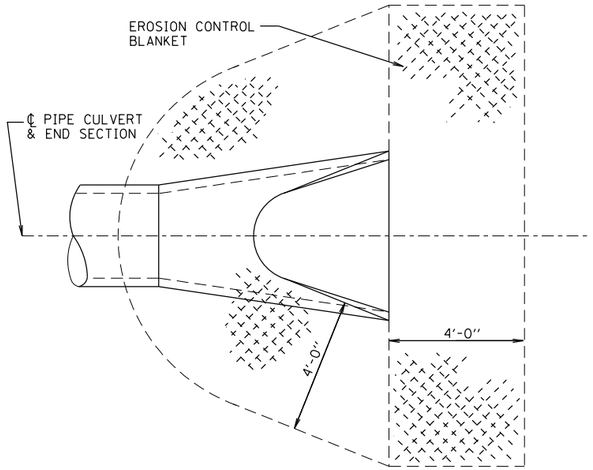

NOTES:
TO BE USED AT ALL END SECTIONS.

PRC FLARED END SECTION SHOWN.
TREATMENT SAME FOR OTHER END SECTIONS.

DETAIL OF EROSION CONTROL BLANKET LINING AROUND END SECTION

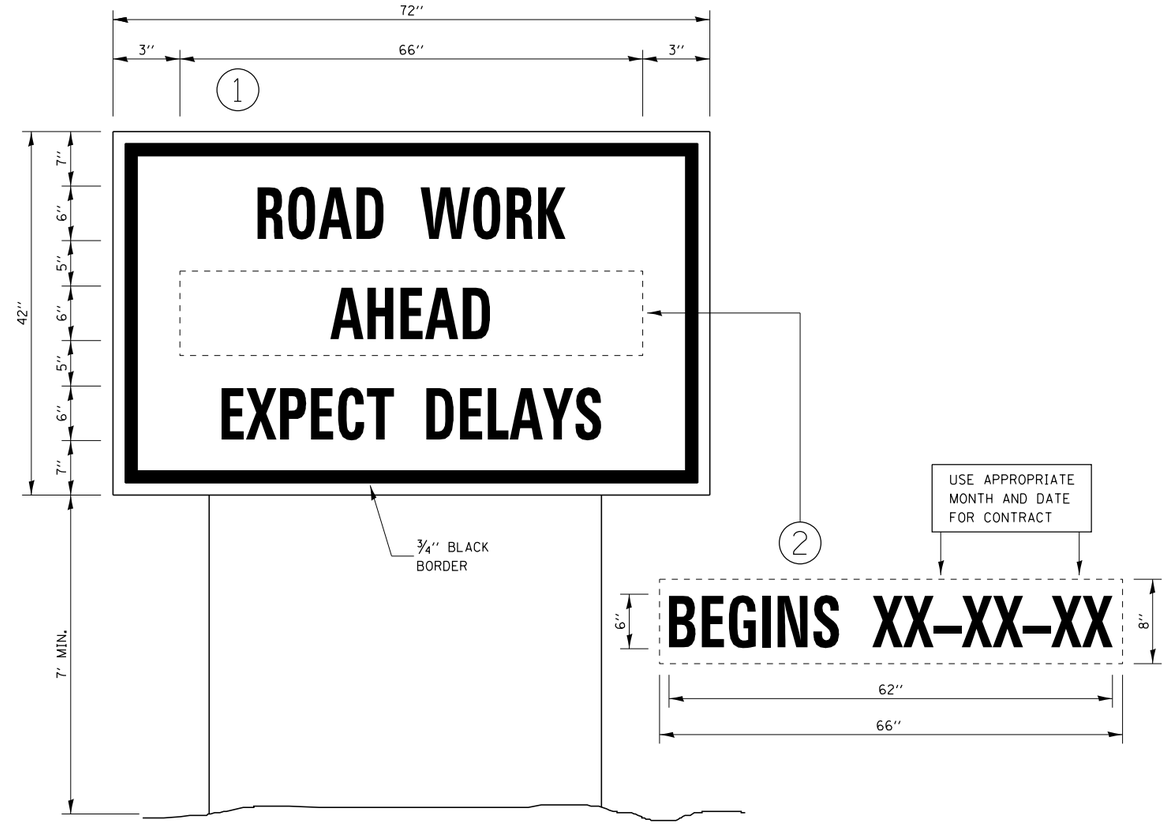

TEMPORARY INFORMATION SIGNING

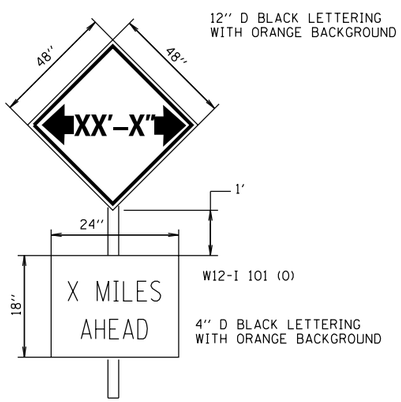

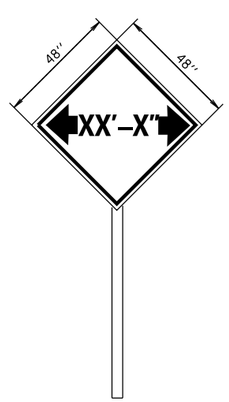

TO BE POST MOUNTED AS SHOWN ELSEWHERE IN THE PLANS.

THE ENGINEER WILL NOTIFY DISTRICT 3 BUREAU OF OPERATIONS 14 CALENDAR DAYS PRIOR TO INSTALLING ANY TRAFFIC CONTROL DEVICES THAT WILL RESTRICT THE PAVEMENT WIDTH.

THE CONTRACTOR SHALL BE RESPONSIBLE FOR COORDINATING WITH THE ENGINEER TO MEET THIS REQUIREMENT.

COST OF SUPPLYING, INSTALLING, MAINTAINING AND REMOVING WIDTH RESTRICTION SIGNS SHALL BE INCLUDED IN THE COST OF THE TRAFFIC CONTROL AND PROTECTION PAY ITEMS.

SIGN POST LOCATIONS

1. SOUTHWEST CORNER U.S. RTE. 52 AND IL RT 1.
2. NORTHEAST CORNER OF U.S. RTE. 24 AND IL. RTE. 1
3. STA. 12+00, RT. IL. RTE. 1
4. STA. 42+00, LT. IL. RTE. 1

STAGE I - WIDTH RESTRICTION - 10'-6"

STAGE II - WIDTH RESTRICTION - 12'-6"

WIDTH RESTRICTION SIGNING DETAILS

NOTES:

1. USE 6" D BLACK LETTERING ON FLOURESENT ORANGE BACKGROUND.
2. ERECT SIGNS AT LOCATIONS IN ADVANCE OF THE "ROAD CONSTRUCTION AHEAD" SIGNS AS DIRECTED BY THE ENGINEER.
3. ERECT SIGN (1) WITH INSTALLED PANEL (2) A MINIMUM OF ONE WEEK PRIOR TO THE START OF THE LANE CLOSURE.
4. REMOVE PANEL (2) ON THAT DATE.
5. SEE SPECIAL PROVISION "TEMPORARY INFORMATION SIGNING" FOR ADDITIONAL INFORMATION.
6. WILL BE PAID FOR PER SQ FT AS "TEMPORARY INFORMATION SIGNING". EACH SIGN = 21 SQ FT AND THE DATE PANEL (2) WILL NOT BE MEASURED SEPARATELY FOR PAYMENT.

Farnsworth GROUP, INC.
2709 McGraw Drive
Bloomington, Illinois 61704
309/663-8435, 309/663-1571 fax

DESIGNED - NAS/JJO	REVISED -	STATE OF ILLINOIS DEPARTMENT OF TRANSPORTATION	DETAILS
DRAWN - JJO/DRR	REVISED -		
CHECKED - MSW	REVISED -		
DATE - 04/10/14	REVISED -		

SCALE: SHEET OF SHEETS STA. TO STA.

F.A.P RTE.	SECTION	COUNTY	TOTAL SHEETS	SHEET NO.
332	(3)BR	IROQUOIS	100	66

CONTRACT NO. 66736

ILLINOIS FED. AID PROJECT

24-8052

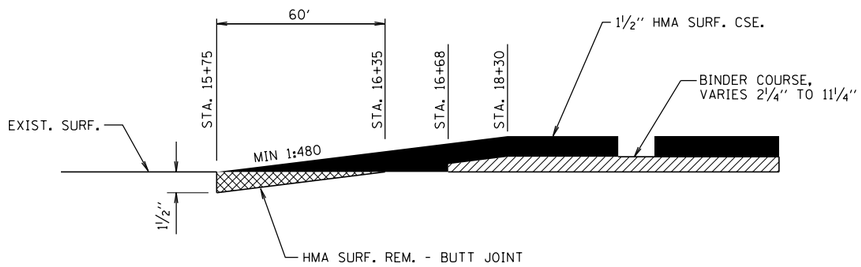

BEGINNING OF ROADWAY IMPROVEMENTS

STA. 15+75

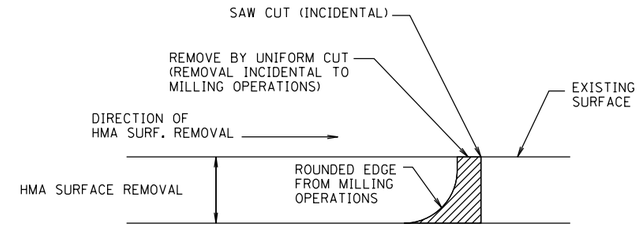

NOTE:

WHEN MILLING OPERATIONS PRODUCE A ROUNDED EDGE, THEN A SAW CUT SHALL BE USED TO MANUFACTURE A PERPENDICULAR EDGE AS SHOWN IN THE DETAIL. THE ENGINEER SHALL BE THE SOLE JUDGE CONCERNING THE USE OF THIS DETAIL

HMA DETAIL AT BUTT JOINTS

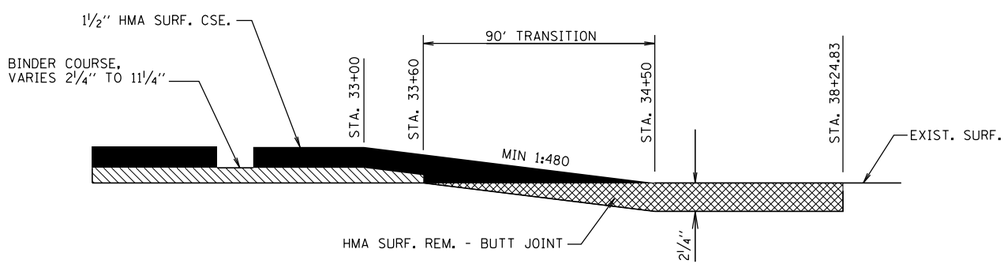

END OF ROADWAY IMPROVEMENTS

STA. 34+50

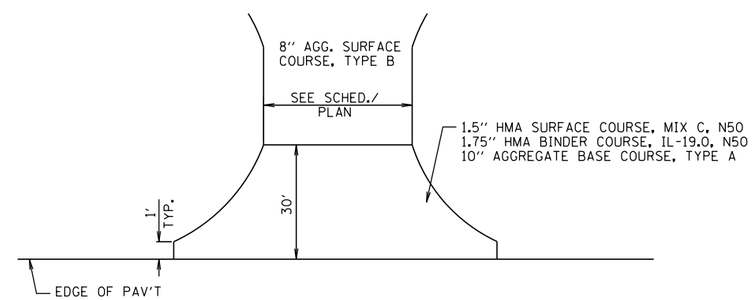

PROP. HMA SHLD. SHALL NOT BE CONSTRUCTED THRU HMA SIDEROADS.

PROPOSED COMMERCIAL ENTRANCE

Farnsworth GROUP, INC.
2709 McGraw Drive
Bloomington, Illinois 61704
309/663-8435, 309/663-1571 fax

DESIGNED - NAS/JJO	REVISED -	STATE OF ILLINOIS DEPARTMENT OF TRANSPORTATION	DETAILS
DRAWN - JJO/DRR	REVISED -		
CHECKED - MSW	REVISED -		
DATE - 04/10/14	REVISED -		

SCALE: SHEET OF SHEETS STA. TO STA.

F.A.P RTE.	SECTION	COUNTY	TOTAL SHEETS	SHEET NO.
332	(3)BR	IROQUOIS	100	67

CONTRACT NO. 66736

ILLINOIS FED. AID PROJECT

24-8052

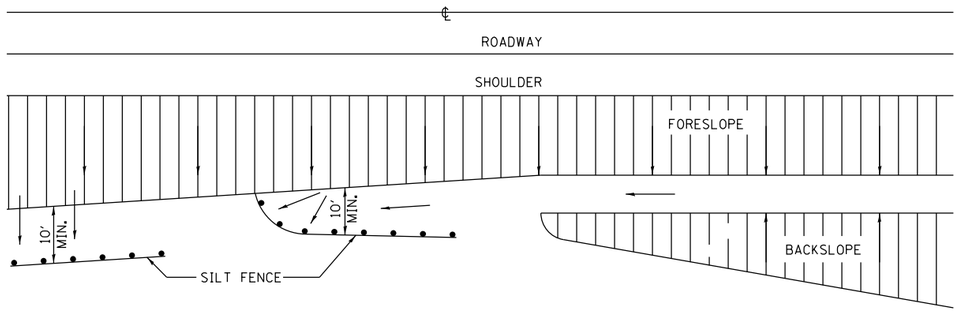

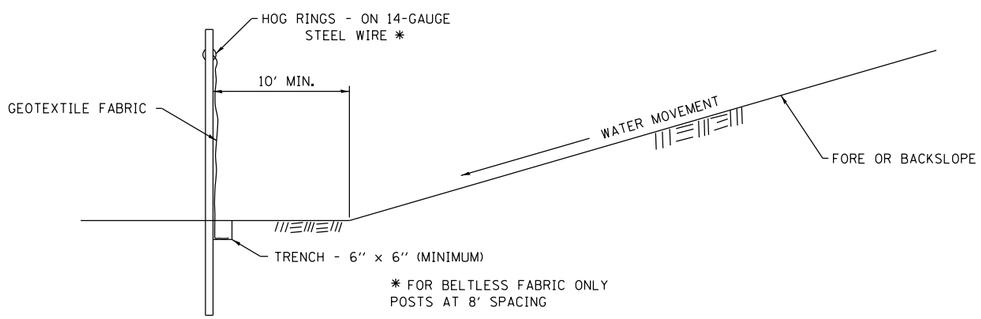

DETAILS OF SILT FENCE

EROSION CONTROL DETAILS FOR SILT FENCE

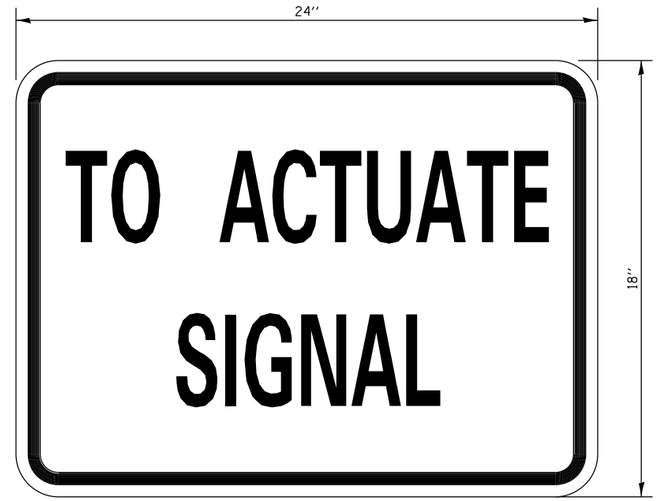

SIZE: 24'' x 18''

4'' CAPITAL LETTERS - BLACK

½'' BORDER - BLACK

WHITE REFLECTIVE - TYPE B ENGINEERING GRADE SHEETING

GENERAL NOTE:

THIS SIGN SHALL BE INSTALLED AT THE STOP LINE AS DIRECTED BY THE ENGINEER.

STOP LINE SIGN FOR TEMPORARY SIGNALS

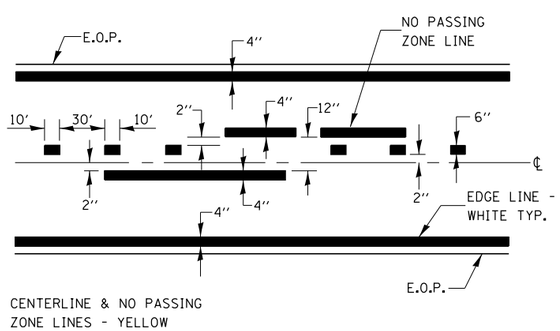

PAVEMENT MARKING

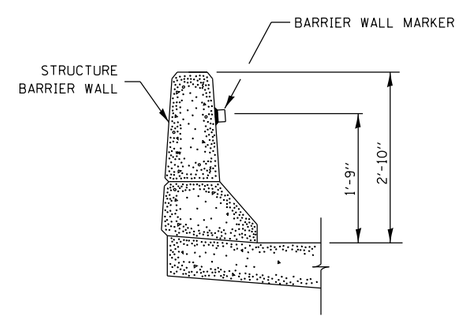

BARRIER WALL MARKER

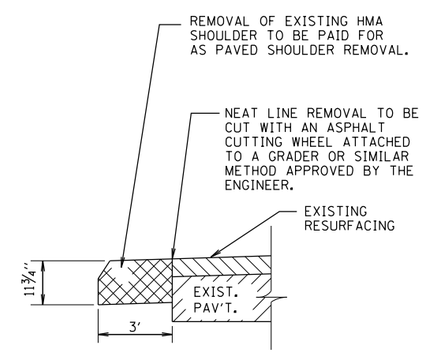

REMOVAL OF EXISTING HMA SHOULDER

Farnsworth GROUP, INC.
2709 McGraw Drive
Bloomington, Illinois 61704
309/663-8435, 309/663-1571 fax

DESIGNED - NAS/JJO	REVISED -	STATE OF ILLINOIS DEPARTMENT OF TRANSPORTATION	DETAILS
DRAWN - JJO/DRR	REVISED -		
CHECKED - MSW	REVISED -		
DATE - 04/10/14	REVISED -		SCALE: SHEET OF SHEETS STA. TO STA.

F.A.P RTE.	SECTION	COUNTY	TOTAL SHEETS	SHEET NO.
332	(3)BR	IROQUOIS	100	68
		CONTRACT NO. 66736		
	ILLINOIS	FED. AID PROJECT		

24-8052

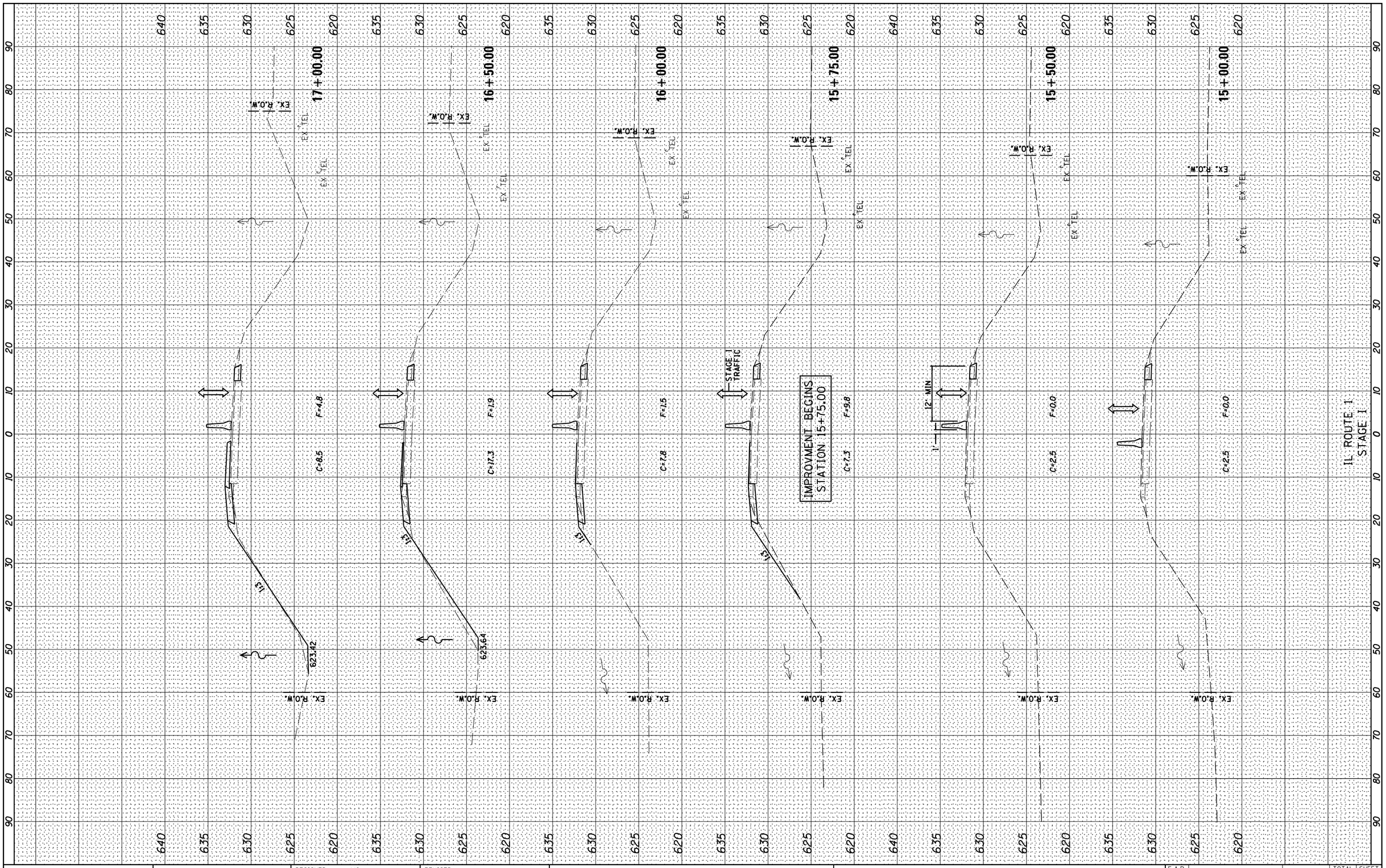

FINAL SURVEY	BY	DATE
SURVEYED		
PLOTTED		
TEMPLATE		
AREAS		
AREAS CHECKED		
NOTE BOOK		
NO.		

ORIGINAL SURVEY	BY	DATE
SURVEYED		
PLOTTED		
TEMPLATE		
AREAS		
AREAS CHECKED		
NOTE BOOK		
NO.		

Farnsworth GROUP, INC.
2709 McGraw Drive
Bloomington, Illinois 61704
309/663-8435, 309/663-1571 fax

DESIGNED - JJO	REVISED -	
DRAWN - JJO	REVISED -	
CHECKED - MSW	REVISED -	
DATE - 04/10/14	REVISED -	

STATE OF ILLINOIS
DEPARTMENT OF TRANSPORTATION

IL ROUTE 1
CROSS SECTIONS
STAGE I

SCALE: | SHEET NO. OF SHEETS | STA. 15+00.00 TO STA. 17+00.00

F.A.P. RTE.	SECTION	COUNTY	TOTAL SHEETS	SHEET NO.
332	(3)BR	IROQUOIS	100	69

CONTRACT NO. 66736

ILLINOIS FED. AID PROJECT

24-8052

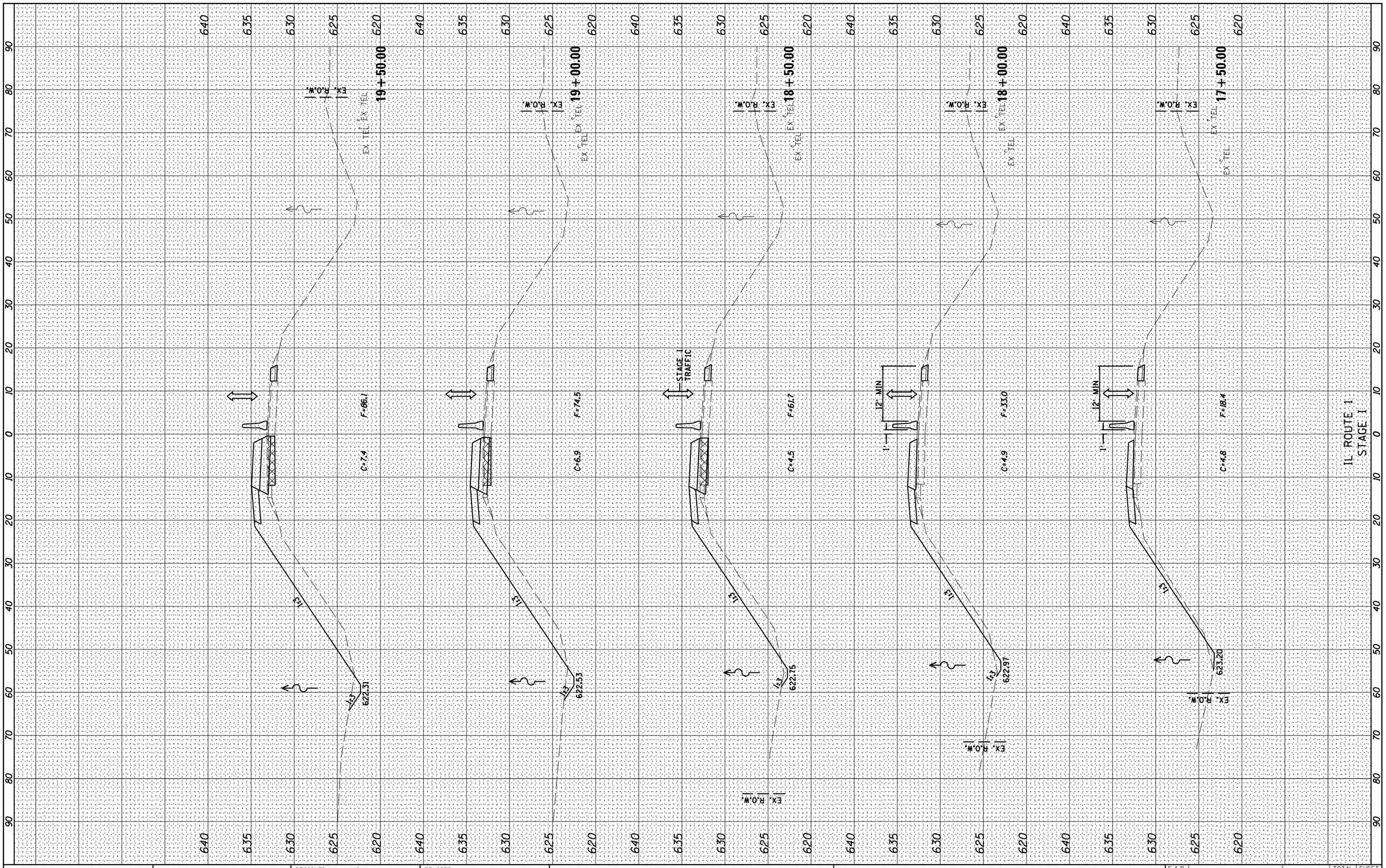

FINAL SURVEY	BY	DATE
SURVEYED		
PLOTTED		
TEMPLATE		
AREAS		
AREAS CHECKED		
NOTE BOOK		
NO.		

ORIGINAL SURVEY	BY	DATE
SURVEYED		
PLOTTED		
TEMPLATE		
AREAS		
AREAS CHECKED		
NOTE BOOK		
NO.		

Farnsworth GROUP, INC.
2709 McGraw Drive
Bloomington, Illinois 61704
309/663-8435, 309/663-1571 fax

DESIGNED - JJO	REVISED -	
DRAWN - JJO	REVISED -	
CHECKED - MSW	REVISED -	
DATE - 04/10/14	REVISED -	

STATE OF ILLINOIS
DEPARTMENT OF TRANSPORTATION

IL ROUTE 1
CROSS SECTIONS
STAGE I

SCALE: | SHEET NO. OF SHEETS | STA. 17+50.00 TO STA. 19+50.00

F.A.P. RTE.	SECTION	COUNTY	TOTAL SHEETS	SHEET NO.
332	(3)BR	IROQUOIS	100	70

CONTRACT NO. 66736

ILLINOIS FED. AID PROJECT

24-8052

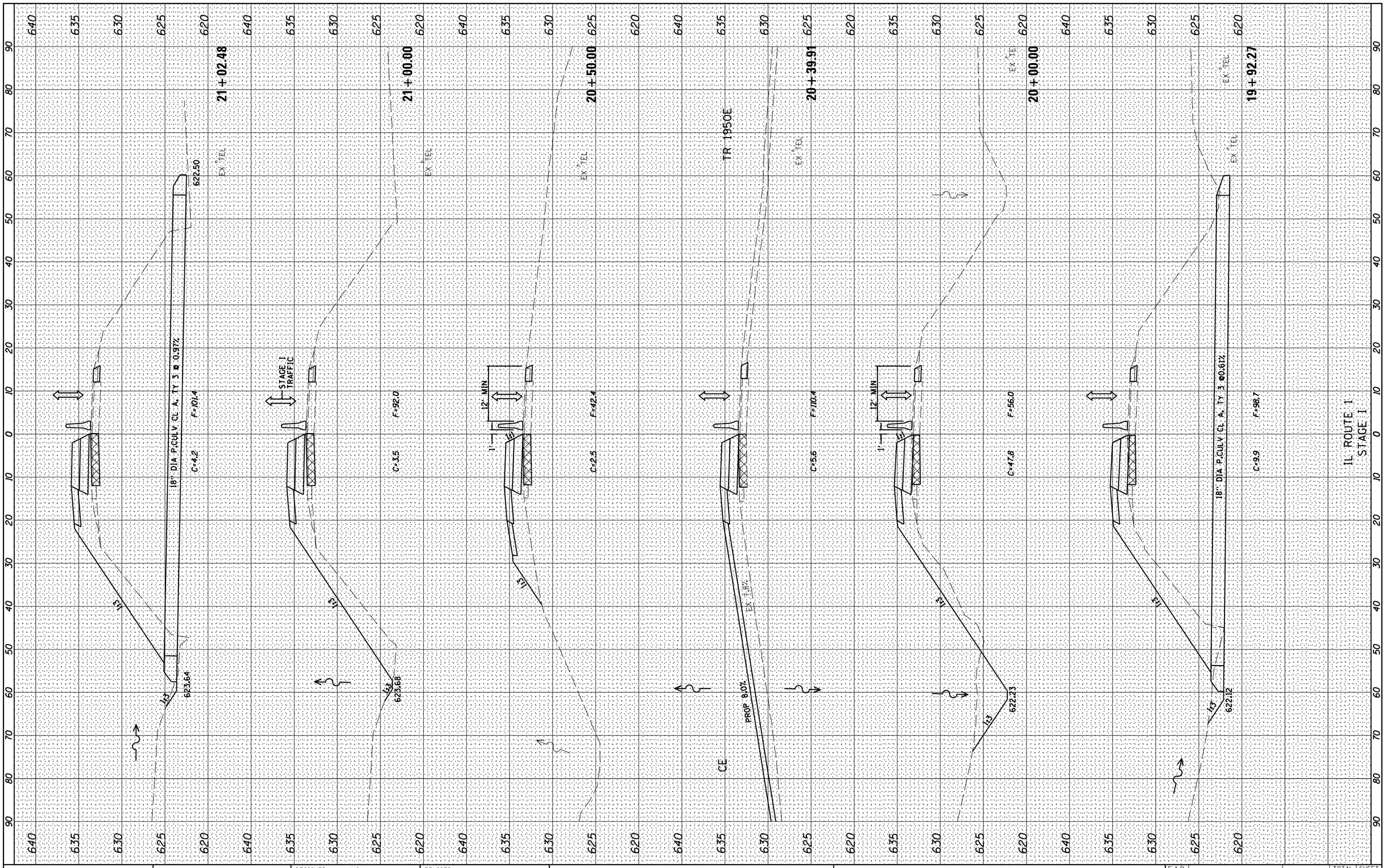

FINAL SURVEY	BY	DATE
SURVEYED		
PLOTTED		
TEMPLATE		
AREAS		
AREAS CHECKED		
NOTE BOOK		
NO.		

ORIGINAL SURVEY	BY	DATE
SURVEYED		
PLOTTED		
TEMPLATE		
AREAS		
AREAS CHECKED		
NOTE BOOK		
NO.		

Farnsworth GROUP, INC.
2709 McGraw Drive
Bloomington, Illinois 61704
309/663-8435, 309/663-1571 fax

DESIGNED - JJO	REVISED -	
DRAWN - JJO	REVISED -	
CHECKED - MSW	REVISED -	
DATE - 04/10/14	REVISED -	

STATE OF ILLINOIS
DEPARTMENT OF TRANSPORTATION

IL ROUTE 1
CROSS SECTIONS
STAGE I

SCALE: | SHEET NO. OF SHEETS | STA. 19+92.27 TO STA. 21+02.48

F.A.P. RTE.	SECTION	COUNTY	TOTAL SHEETS	SHEET NO.
332	(3)BR	IROQUOIS	100	71

CONTRACT NO. 66736

ILLINOIS FED. AID PROJECT

24-8052

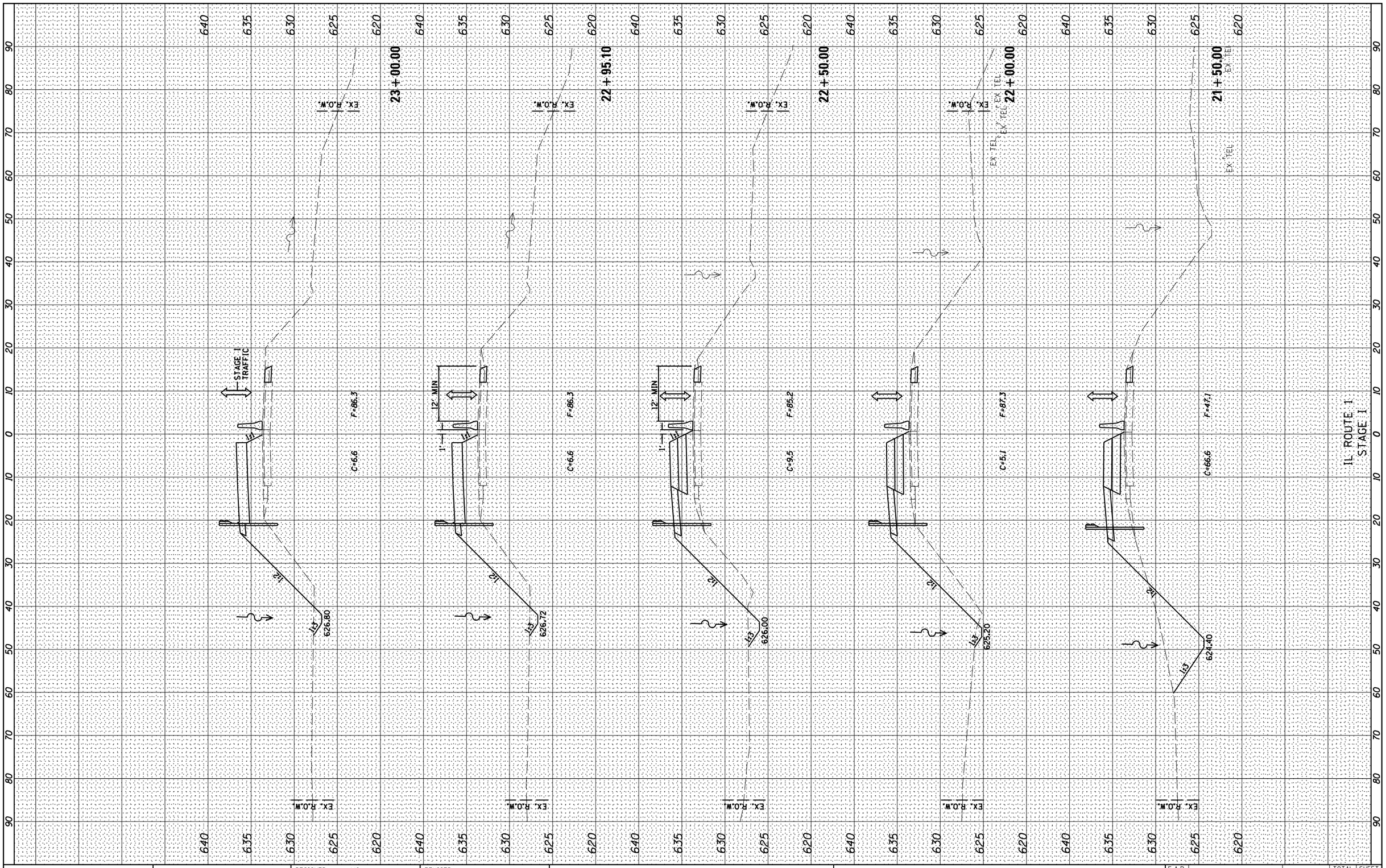

FINAL SURVEY	BY	DATE
SURVEYED		
PLOTTED		
TEMPLATE		
AREAS		
AREAS CHECKED		
NOTE BOOK		
NO.		

ORIGINAL SURVEY	BY	DATE
SURVEYED		
PLOTTED		
TEMPLATE		
AREAS		
AREAS CHECKED		
NOTE BOOK		
NO.		

Farnsworth GROUP, INC.
2709 McGraw Drive
Bloomington, Illinois 61704
309/663-8435, 309/663-1571 fax

DESIGNED - JJO	REVISED -	
DRAWN - JJO	REVISED -	
CHECKED - MSW	REVISED -	
DATE - 04/10/14	REVISED -	

STATE OF ILLINOIS
DEPARTMENT OF TRANSPORTATION

IL ROUTE 1
CROSS SECTIONS
STAGE I

SCALE: | SHEET NO. OF SHEETS | STA. 21+50.00 TO STA. 23+00.00

F.A.P. RTE.	SECTION	COUNTY	TOTAL SHEETS	SHEET NO.
332	(3)BR	IROQUOIS	100	72

CONTRACT NO. 66736

ILLINOIS FED. AID PROJECT

24-8052

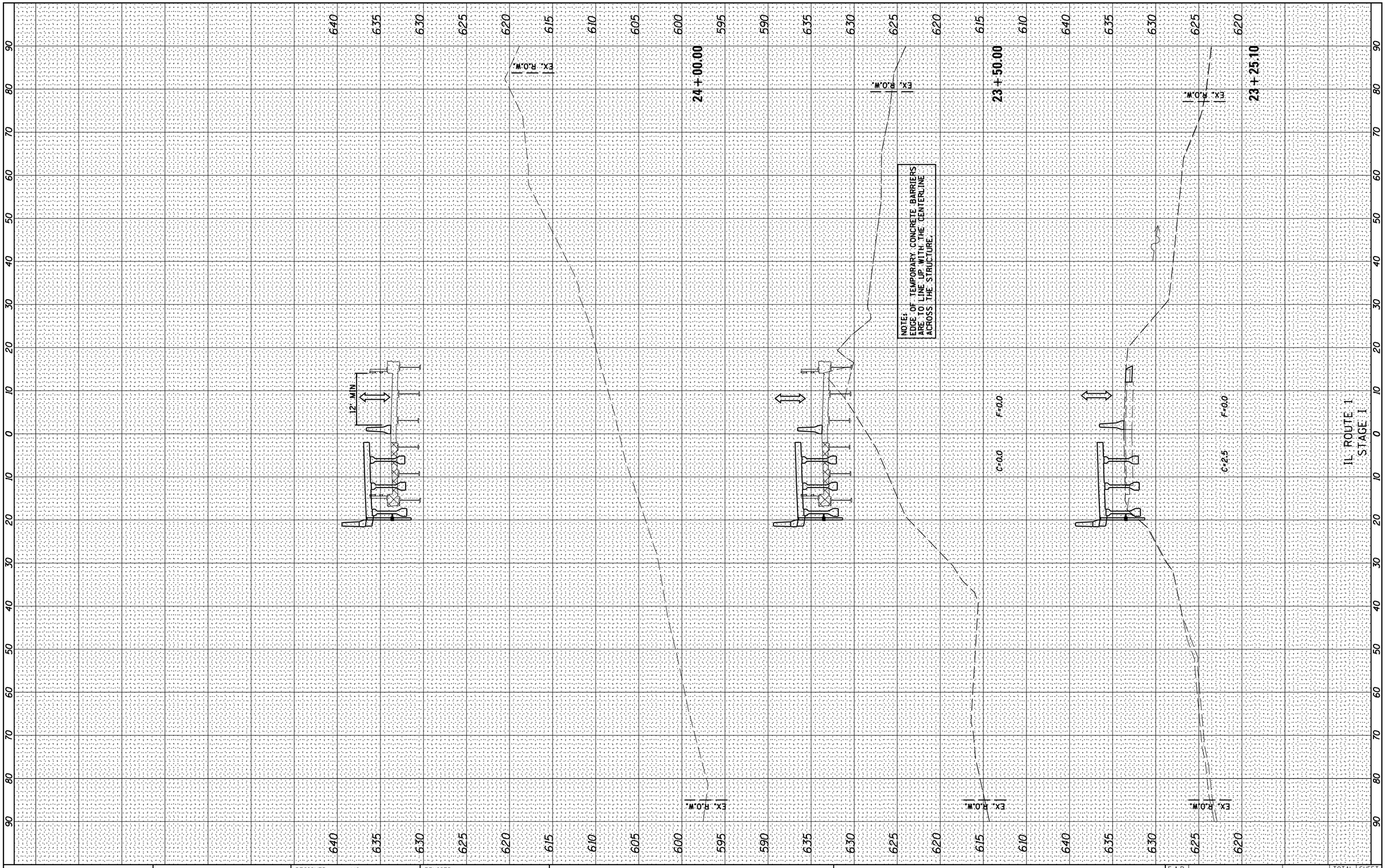

FINAL SURVEY		BY	DATE
NOTE BOOK	SURVEYED		
	PLOTTED		
	TEMPLATE		
	AREAS		
	AREAS CHECKED		
NO.			

ORIGINAL SURVEY		BY	DATE
NOTE BOOK	SURVEYED		
	PLOTTED		
	TEMPLATE		
	AREAS		
	AREAS CHECKED		
NO.			

Farnsworth GROUP, INC.
2709 McGraw Drive
Bloomington, Illinois 61704
309/663-8435, 309/663-1571 fax

DESIGNED - JJO	REVISED -	
DRAWN - JJO	REVISED -	
CHECKED - MSW	REVISED -	
DATE - 04/10/14	REVISED -	

STATE OF ILLINOIS
DEPARTMENT OF TRANSPORTATION

IL ROUTE 1
CROSS SECTIONS
STAGE I

SCALE: | SHEET NO. OF SHEETS | STA. 23+25.10 TO STA. 24+00.00

F.A.P. RTE.	SECTION	COUNTY	TOTAL SHEETS	SHEET NO.
332	(3)BR	IROQUOIS	100	73
		CONTRACT NO. 66736		
		ILLINOIS FED. AID PROJECT		

24-8052

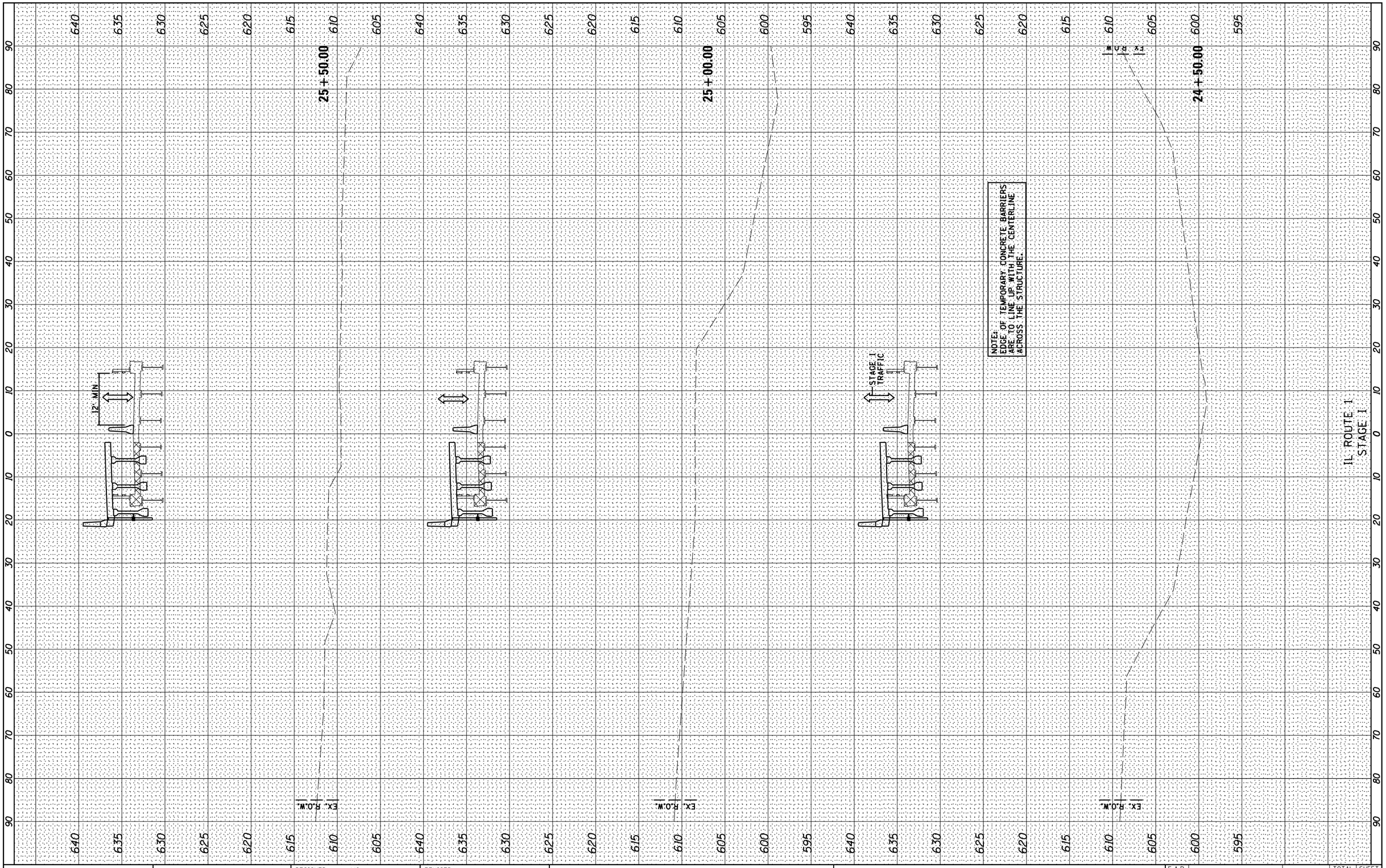

FINAL SURVEY		BY	DATE
NOTE BOOK	SURVEYED		
	PLOTTED		
	TEMPLATE		
	AREAS		
	AREAS CHECKED		
NO.			

ORIGINAL SURVEY		BY	DATE
NOTE BOOK	SURVEYED		
	PLOTTED		
	TEMPLATE		
	AREAS		
	AREAS CHECKED		
NO.			

Farnsworth GROUP, INC.
2709 McGraw Drive
Bloomington, Illinois 61704
309/663-8435, 309/663-1571 fax

DESIGNED - JJO	REVISED -	
DRAWN - JJO	REVISED -	
CHECKED - MSW	REVISED -	
DATE - 04/10/14	REVISED -	

STATE OF ILLINOIS
DEPARTMENT OF TRANSPORTATION

IL ROUTE 1
CROSS SECTIONS
STAGE I

SCALE: | SHEET NO. OF SHEETS | STA. 24+50.00 TO STA. 25+50.00

F.A.P. RTE.	SECTION	COUNTY	TOTAL SHEETS	SHEET NO.
332	(3)BR	IROQUOIS	100	74
		CONTRACT NO. 66736		
		ILLINOIS FED. AID PROJECT		

24-8052

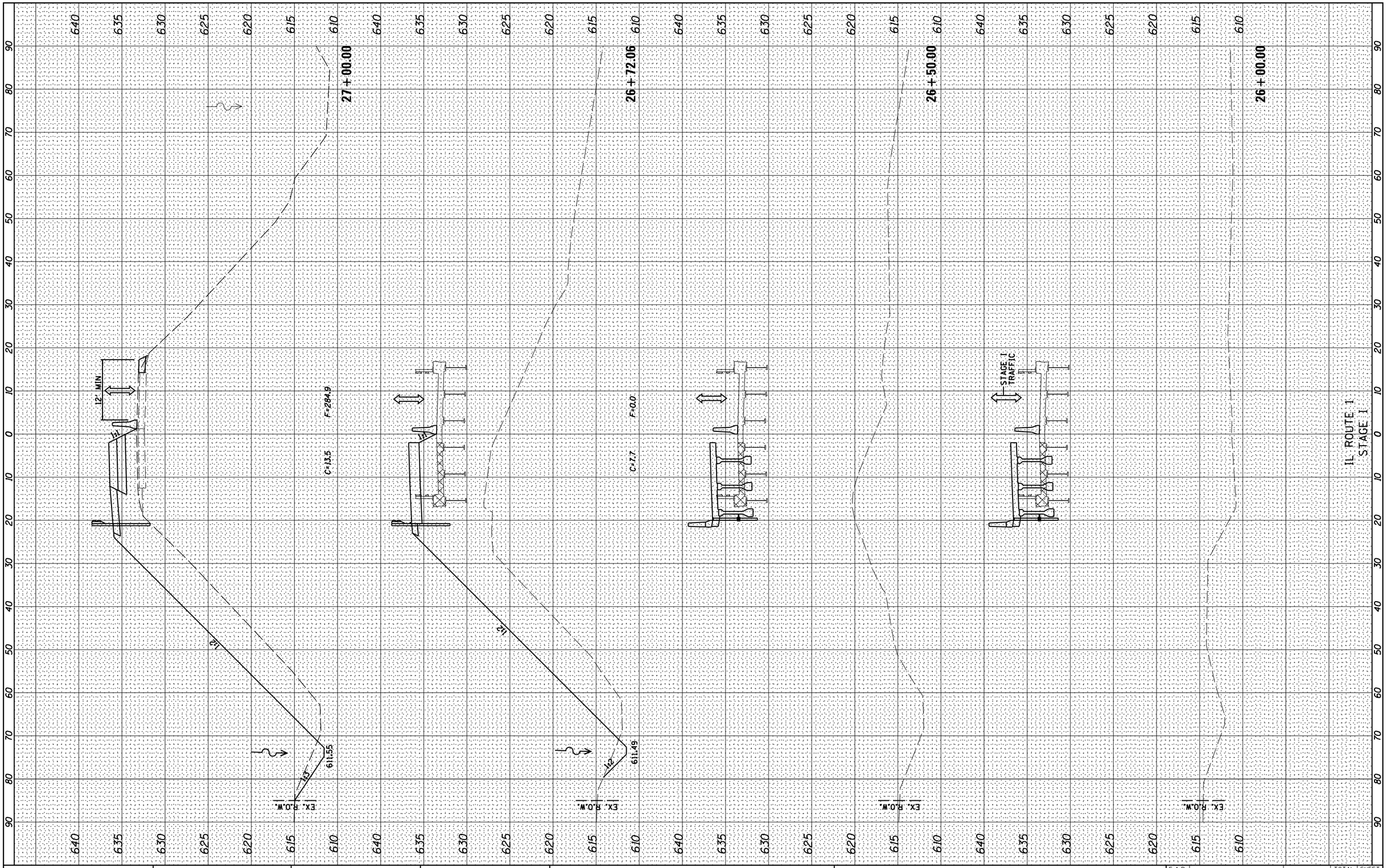

FINAL SURVEY		BY	DATE
NOTE BOOK	SURVEYED		
	PLOTTED		
	TEMPLATE		
	AREAS		
	AREAS CHECKED		
NO.			

ORIGINAL SURVEY		BY	DATE
NOTE BOOK	SURVEYED		
	PLOTTED		
	TEMPLATE		
	AREAS		
	AREAS CHECKED		
NO.			

Farnsworth GROUP, INC.
2709 McGraw Drive
Bloomington, Illinois 61704
309/663-8435, 309/663-1571 fax

DESIGNED - JJO	REVISED -	
DRAWN - JJO	REVISED -	
CHECKED - MSW	REVISED -	
DATE - 04/10/14	REVISED -	

STATE OF ILLINOIS
DEPARTMENT OF TRANSPORTATION

IL ROUTE 1
CROSS SECTIONS
STAGE I

SCALE: | SHEET NO. OF SHEETS | STA. 26+00.00 TO STA. 27+00.00

F.A.P. RTE.	SECTION	COUNTY	TOTAL SHEETS	SHEET NO.
332	(3)BR	IROQUOIS	100	75

CONTRACT NO. 66736

ILLINOIS FED. AID PROJECT

24-8052

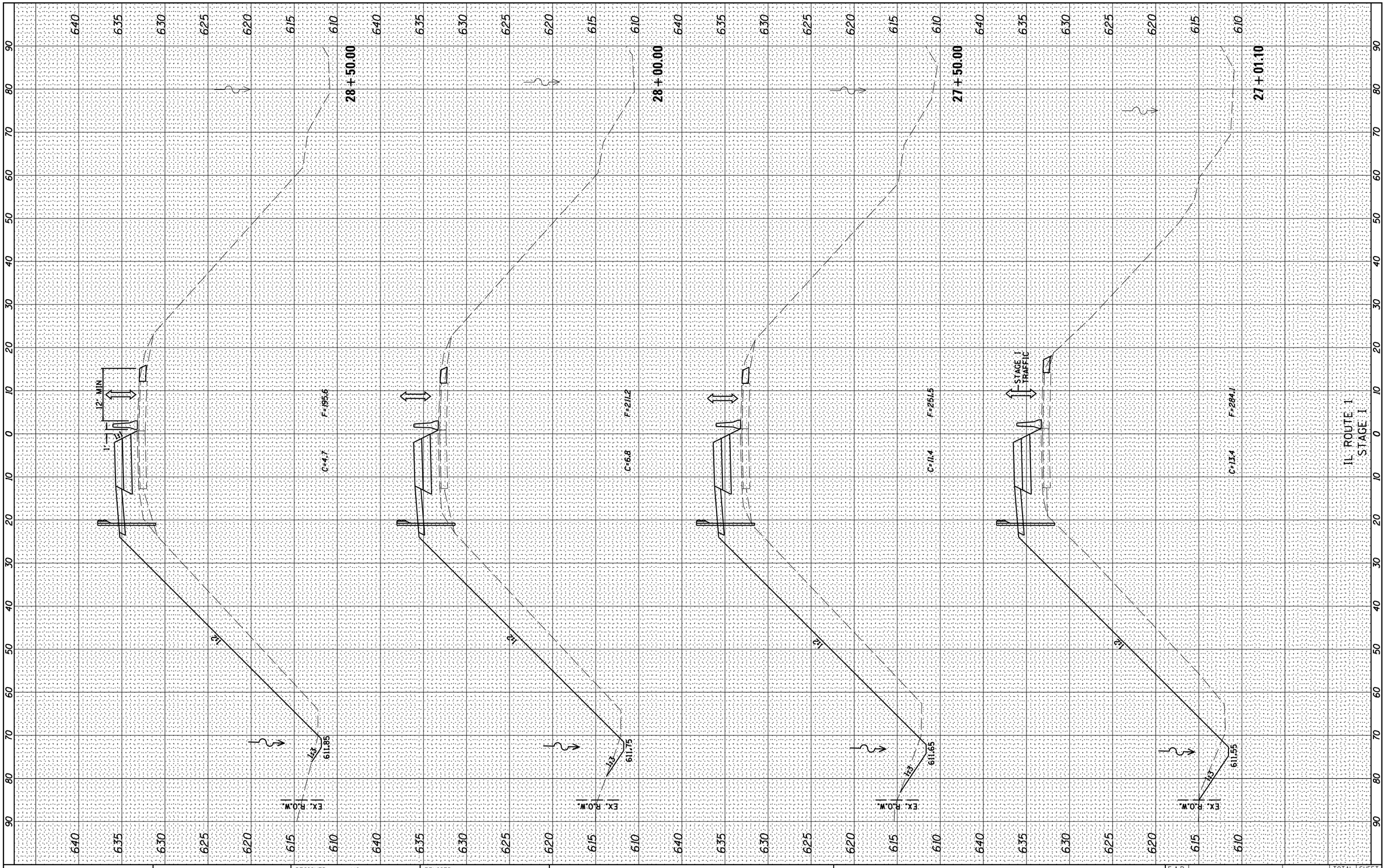

FINAL SURVEY	BY	DATE
SURVEYED		
PLOTTED		
TEMPLATE		
AREAS		
AREAS CHECKED		
NOTE BOOK		
NO.		

ORIGINAL SURVEY	BY	DATE
SURVEYED		
PLOTTED		
TEMPLATE		
AREAS		
AREAS CHECKED		
NOTE BOOK		
NO.		

Farnsworth GROUP, INC.
2709 McGraw Drive
Bloomington, Illinois 61704
309/663-8435, 309/663-1571 fax

DESIGNED - JJO	REVISED -		
DRAWN - JJO	REVISED -		
CHECKED - MSW	REVISED -		
DATE - 04/10/14	REVISED -		

STATE OF ILLINOIS
DEPARTMENT OF TRANSPORTATION

IL ROUTE 1
CROSS SECTIONS
STAGE I

SCALE: | SHEET NO. OF SHEETS | STA. 27+01.10 TO STA. 28+50.00

F.A.P. RTE.	SECTION	COUNTY	TOTAL SHEETS	SHEET NO.
332	(3)BR	IROQUOIS	100	76

CONTRACT NO. 66736

ILLINOIS FED. AID PROJECT

24-8052

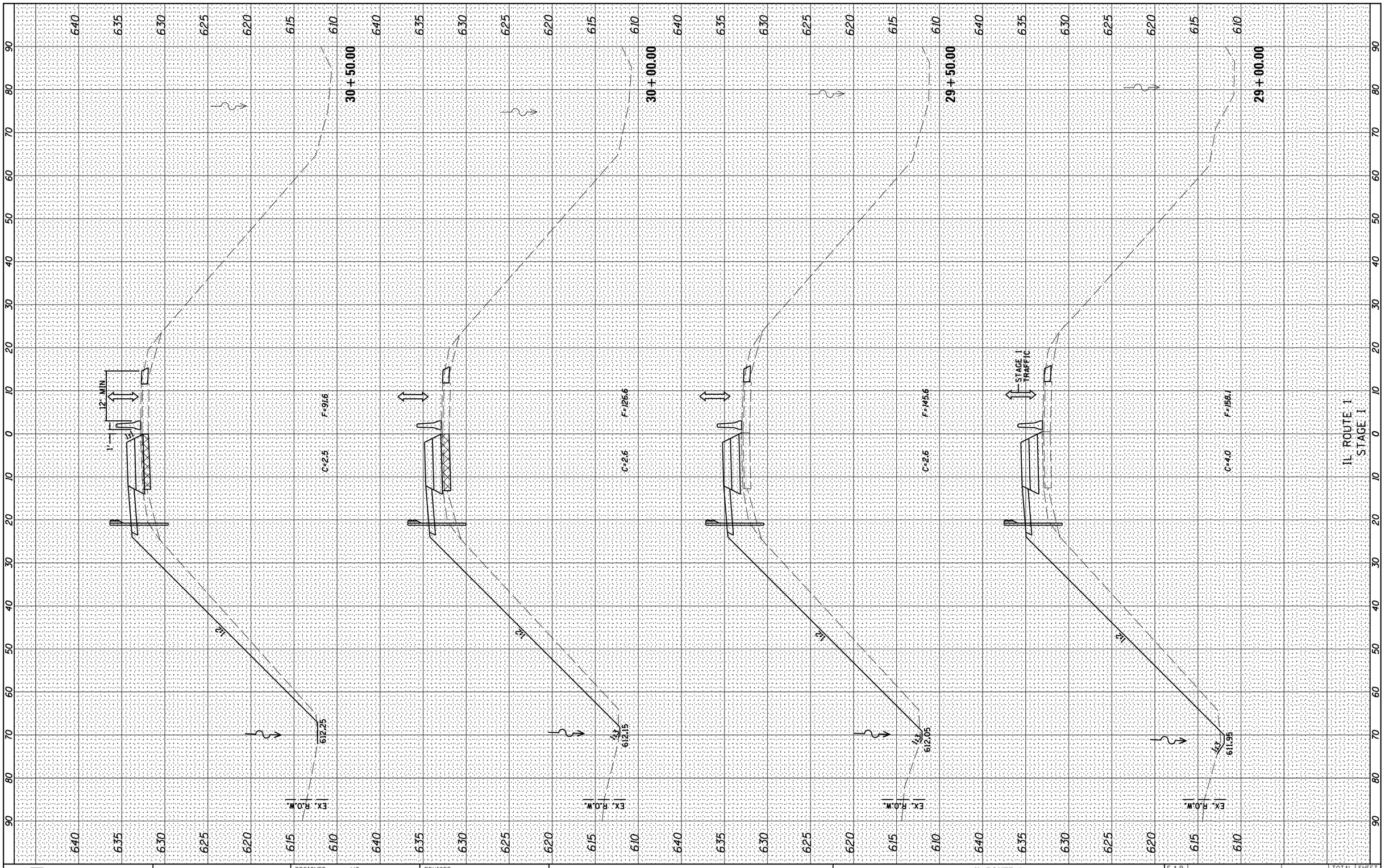

FINAL SURVEY	BY	DATE
SURVEYED		
PLOTTED		
TEMPLATE		
AREAS		
AREAS CHECKED		
NOTE BOOK		
NO.		

ORIGINAL SURVEY	BY	DATE
SURVEYED		
PLOTTED		
TEMPLATE		
AREAS		
AREAS CHECKED		
NOTE BOOK		
NO.		

Farnsworth GROUP, INC.
2709 McGraw Drive
Bloomington, Illinois 61704
309/663-8435, 309/663-1571 fax

DESIGNED - JJO	REVISED -	
DRAWN - JJO	REVISED -	
CHECKED - MSW	REVISED -	
DATE - 04/10/14	REVISED -	

STATE OF ILLINOIS
DEPARTMENT OF TRANSPORTATION

IL ROUTE 1
CROSS SECTIONS
STAGE I

SCALE: | SHEET NO. OF SHEETS | STA. 29+00.00 TO STA. 30+50.00

F.A.P. RTE.	SECTION	COUNTY	TOTAL SHEETS	SHEET NO.
332	(3)BR	IROQUOIS	100	77

CONTRACT NO. 66736

ILLINOIS FED. AID PROJECT

24-8052

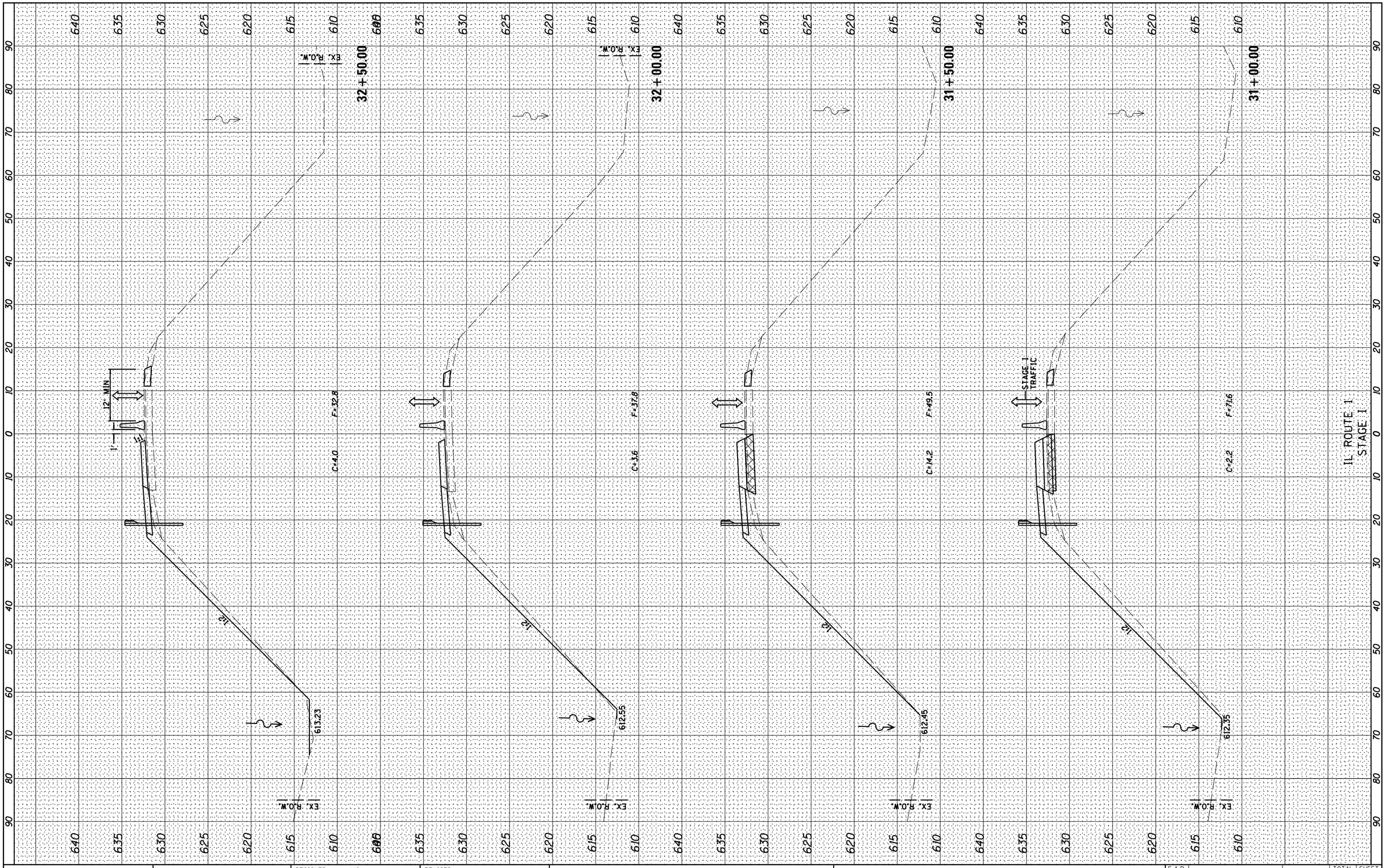

FINAL SURVEY	BY	DATE
SURVEYED		
PLOTTED		
TEMPLATE		
AREAS		
AREAS CHECKED		
NOTE BOOK		
NO.		

ORIGINAL SURVEY	BY	DATE
SURVEYED		
PLOTTED		
TEMPLATE		
AREAS		
AREAS CHECKED		
NOTE BOOK		
NO.		

Farnsworth GROUP, INC.
2709 McGraw Drive
Bloomington, Illinois 61704
309/663-8435, 309/663-1571 fax

DESIGNED - JJO	REVISED -	
DRAWN - JJO	REVISED -	
CHECKED - MSW	REVISED -	
DATE - 04/10/14	REVISED -	

STATE OF ILLINOIS
DEPARTMENT OF TRANSPORTATION

IL ROUTE 1
CROSS SECTIONS
STAGE I

SCALE: | SHEET NO. OF SHEETS | STA. 31+00.00 TO STA. 32+50.00

F.A.P. RTE.	SECTION	COUNTY	TOTAL SHEETS	SHEET NO.
332	(3)BR	IROQUOIS	100	78

CONTRACT NO. 66736

ILLINOIS FED. AID PROJECT

24-8052

ORIGINAL SURVEY		BY	DATE
NOTE BOOK	SURVEYED		
	PLOTTED		
	TEMPLATE		
NO.	AREAS		
	AREAS CHECKED		

FINAL SURVEY		BY	DATE
NOTE BOOK	SURVEYED		
	PLOTTED		
	TEMPLATE		
NO.	AREAS		
	AREAS CHECKED		

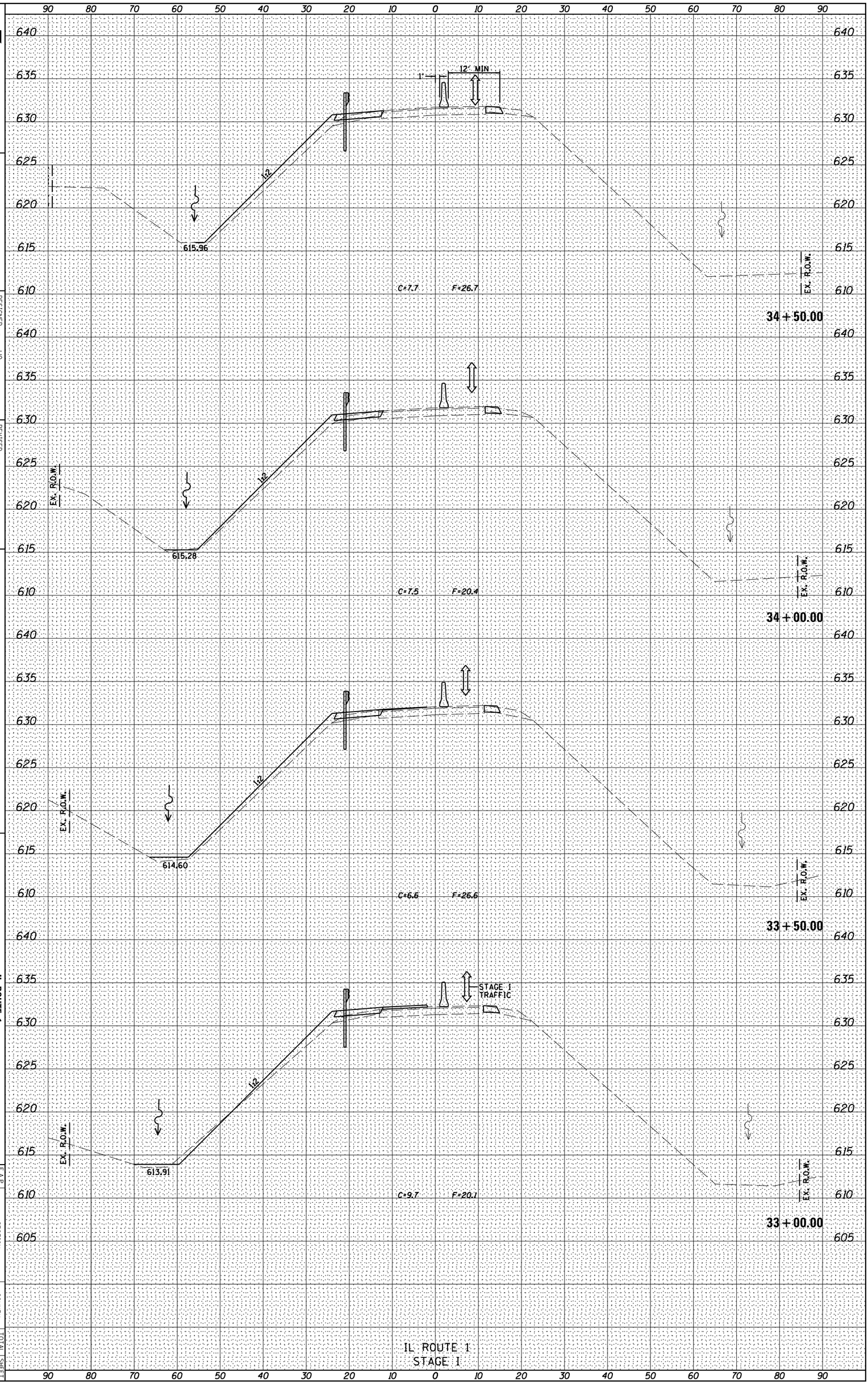

Farnsworth GROUP INC.
2709 McGraw Drive
Bloomington, Illinois 61704
309/663-8435, 309/663-1571 fax

DESIGNED	-	JJO
DRAWN	-	JJO
CHECKED	-	MSW
DATE	-	04/10/14

REVISED	-	
REVISED	-	
REVISED	-	
REVISED	-	

STATE OF ILLINOIS
DEPARTMENT OF TRANSPORTATION

IL ROUTE 1
CROSS SECTIONS
STAGE I

SCALE:

SHEET NO. OF SHEETS STA. 33+00.00 TO STA. 34+50.00

F.A.P. RTE.	SECTION	COUNTY	TOTAL SHEETS	SHEET NO.
332	(3)BR	IROQUOIS	100	79

ILLINOIS FED. AID PROJECT

CONTRACT NO. 66736

24-8052

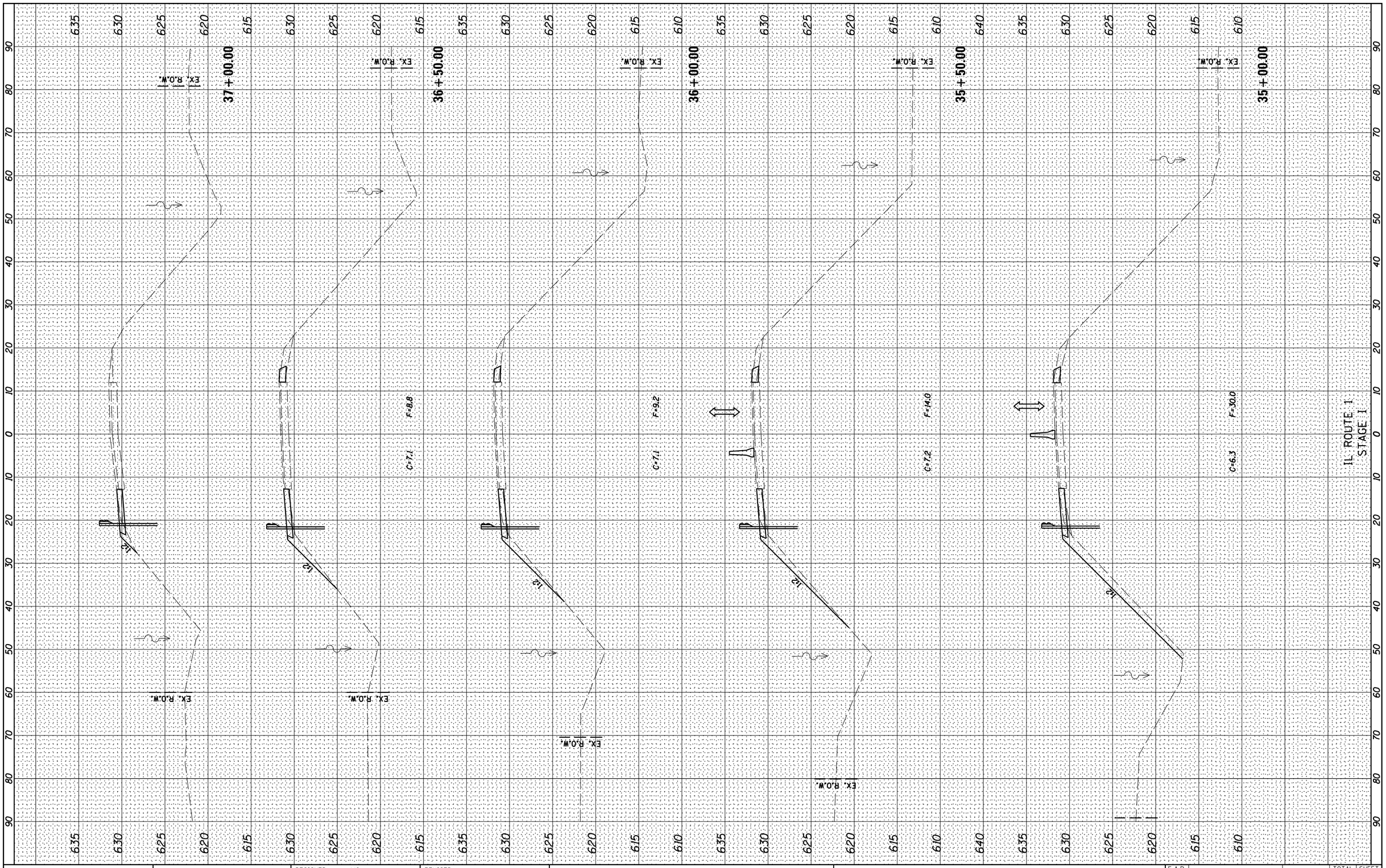

FINAL SURVEY		BY	DATE
NOTE BOOK	SURVEYED		
	PLOTTED		
	TEMPLATE		
	AREAS		
	AREAS CHECKED		
NO.			

ORIGINAL SURVEY		BY	DATE
NOTE BOOK	SURVEYED		
	PLOTTED		
	TEMPLATE		
	AREAS		
	AREAS CHECKED		
NO.			

Farnsworth GROUP, INC.
2709 McGraw Drive
Bloomington, Illinois 61704
309/663-8435, 309/663-1571 fax

DESIGNED - JJO	REVISED -	
DRAWN - JJO	REVISED -	
CHECKED - MSW	REVISED -	
DATE - 04/10/14	REVISED -	

STATE OF ILLINOIS
DEPARTMENT OF TRANSPORTATION

IL ROUTE 1
CROSS SECTIONS
STAGE I

SCALE: | SHEET NO. OF SHEETS | STA. 35+00.00 TO STA. 37+00.00

F.A.P. RTE.	SECTION	COUNTY	TOTAL SHEETS	SHEET NO.
332	(3)BR	IROQUOIS	100	80

CONTRACT NO. 66736

ILLINOIS FED. AID PROJECT

24-8052

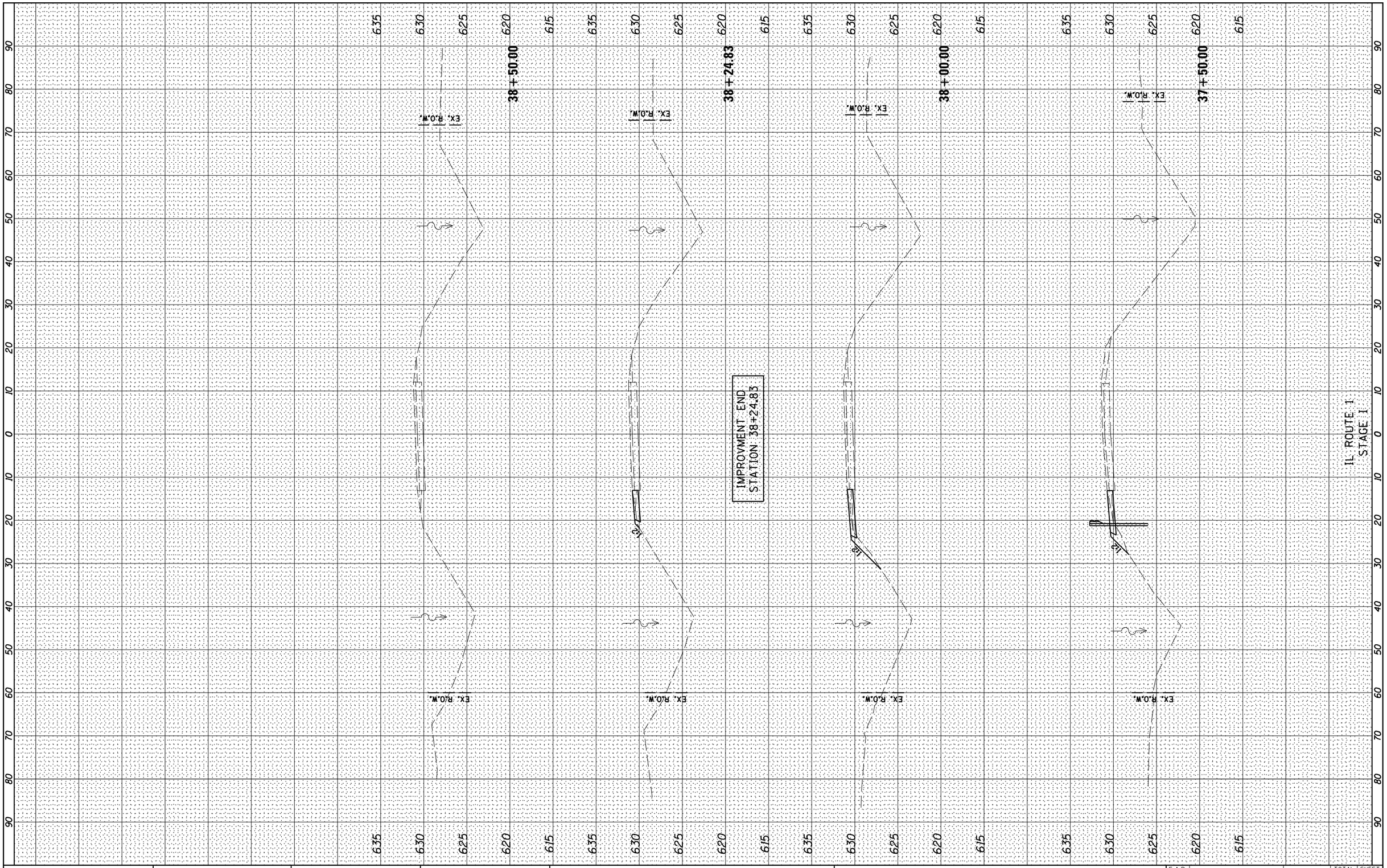

FINAL SURVEY		BY	DATE
	SURVEYED		
	PLOTTED		
NOTE BOOK	TEMPLATE		
	AREAS		
NO.	AREAS CHECKED		

ORIGINAL SURVEY		BY	DATE
	SURVEYED		
	PLOTTED		
NOTE BOOK	TEMPLATE		
	AREAS		
NO.	AREAS CHECKED		

Farnsworth GROUP, INC.
2709 McGraw Drive
Bloomington, Illinois 61704
309/663-8435, 309/663-1571 fax

DESIGNED - JJO	REVISED -		
DRAWN - JJO	REVISED -		
CHECKED - MSW	REVISED -		
DATE - 04/10/14	REVISED -		

STATE OF ILLINOIS
DEPARTMENT OF TRANSPORTATION

IL ROUTE 1
CROSS SECTIONS
STAGE I

SCALE: | SHEET NO. OF SHEETS | STA. 37+50.00 TO STA. 38+50.00

F.A.P. RTE.	SECTION	COUNTY	TOTAL SHEETS	SHEET NO.
332	(3)BR	IROQUOIS	100	81

CONTRACT NO. 66736

ILLINOIS FED. AID PROJECT

24-8052

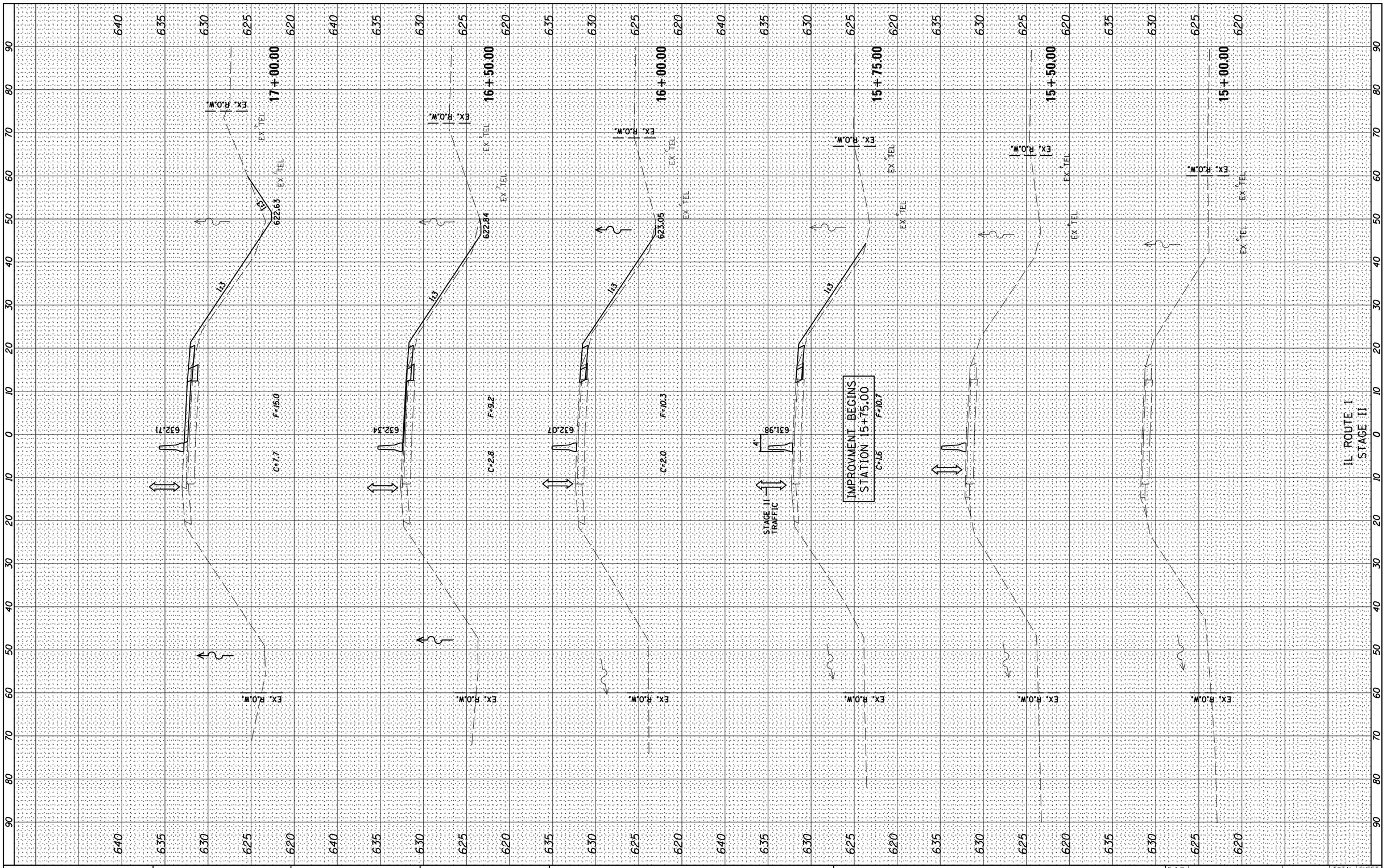

FINAL SURVEY	BY	DATE
SURVEYED		
PLOTTED		
TEMPLATE		
AREAS		
AREAS CHECKED		
NOTE BOOK NO.		

ORIGINAL SURVEY	BY	DATE
SURVEYED		
PLOTTED		
TEMPLATE		
AREAS		
AREAS CHECKED		
NOTE BOOK NO.		

Farnsworth GROUP, INC.
2709 McGraw Drive
Bloomington, Illinois 61704
309/663-8435, 309/663-1571 fax

DESIGNED - JJO	REVISED -		
DRAWN - JJO	REVISED -		
CHECKED - MSW	REVISED -		
DATE - 04/10/14	REVISED -		

STATE OF ILLINOIS
DEPARTMENT OF TRANSPORTATION

IL ROUTE 1
CROSS SECTIONS
STAGE II

SCALE: | SHEET NO. OF SHEETS | STA. 15+00.00 TO STA. 17+00.00

F.A.P. RTE.	SECTION	COUNTY	TOTAL SHEETS	SHEET NO.
332	(3)BR	IROQUOIS	100	82

CONTRACT NO. 66736

ILLINOIS FED. AID PROJECT

24-8052

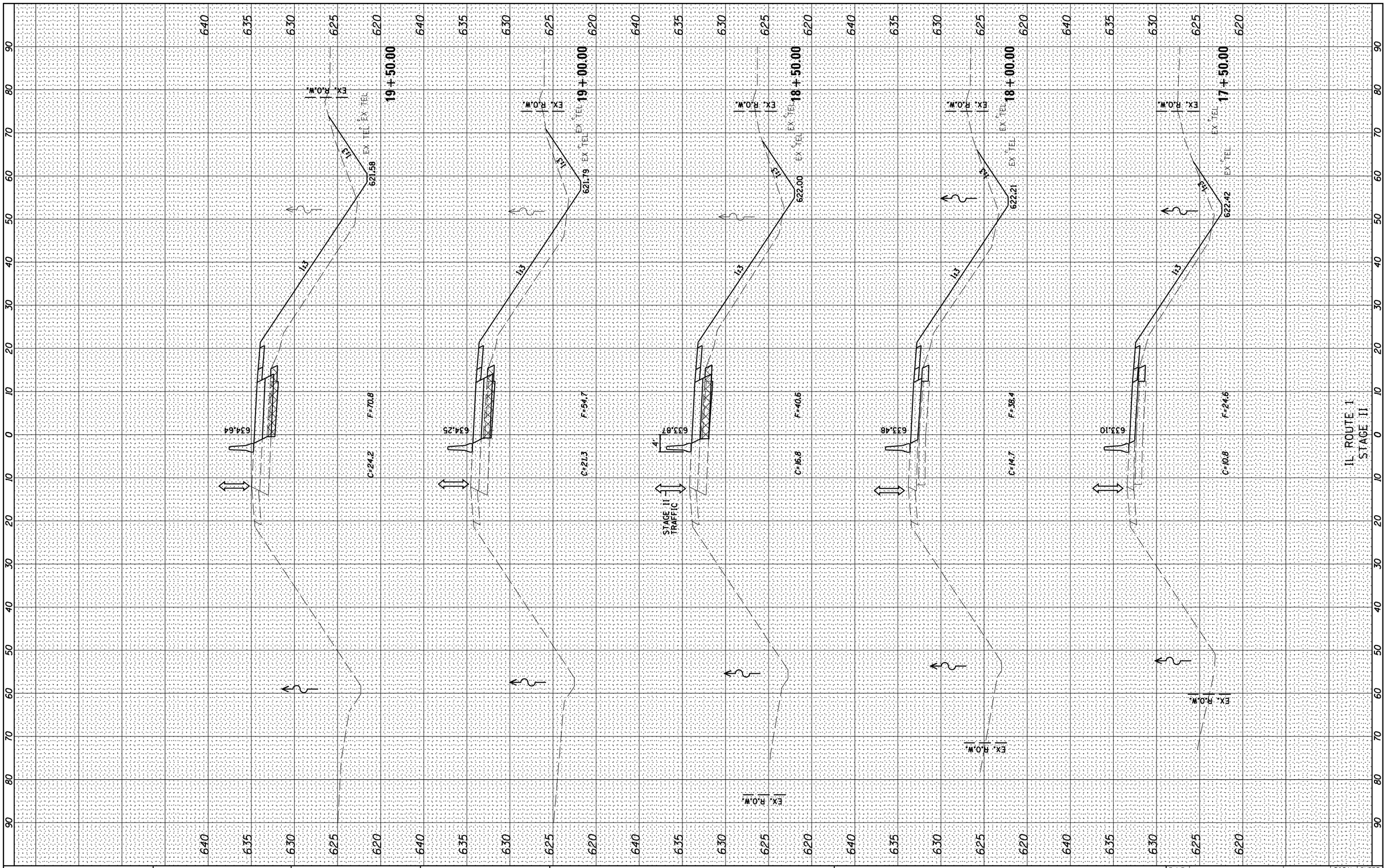

FINAL SURVEY		BY	DATE
NOTE BOOK	SURVEYED		
	PLOTTED		
	TEMPLATE		
	AREAS		
	AREAS CHECKED		
NO.			

ORIGINAL SURVEY		BY	DATE
NOTE BOOK	SURVEYED		
	PLOTTED		
	TEMPLATE		
	AREAS		
	AREAS CHECKED		
NO.			

Farnsworth GROUP, INC.
2709 McGraw Drive
Bloomington, Illinois 61704
309/663-8435, 309/663-1571 fax

DESIGNED - JJO	REVISED -		
DRAWN - JJO	REVISED -		
CHECKED - MSW	REVISED -		
DATE - 04/10/14	REVISED -		

STATE OF ILLINOIS
DEPARTMENT OF TRANSPORTATION

IL ROUTE 1
CROSS SECTIONS
STAGE II

SCALE: | SHEET NO. OF SHEETS | STA. 17+50.00 TO STA. 19+50.00

F.A.P. RTE.	SECTION	COUNTY	TOTAL SHEETS	SHEET NO.
332	(3)BR	IROQUOIS	100	83

CONTRACT NO. 66736

ILLINOIS FED. AID PROJECT

24-8052

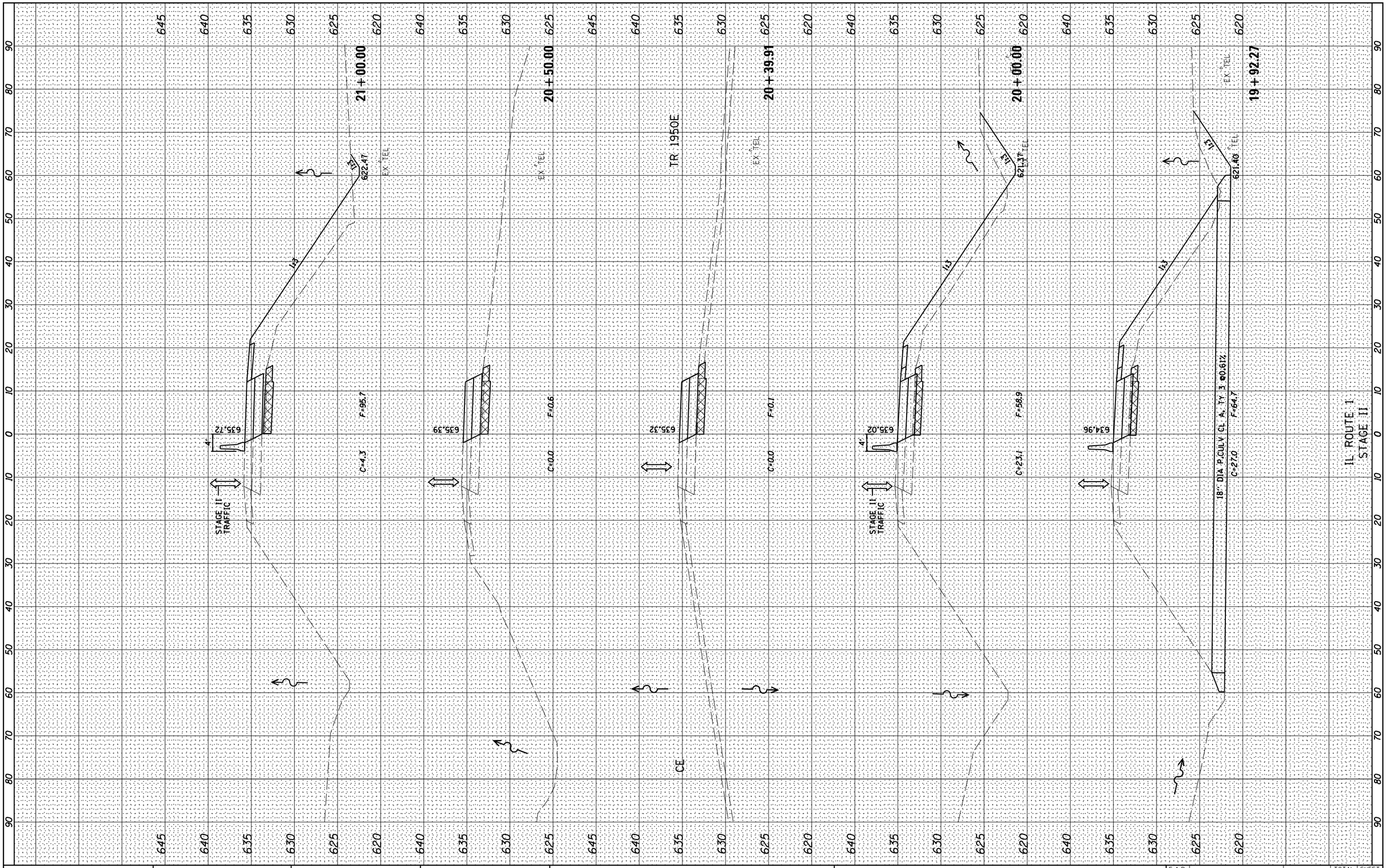

FINAL SURVEY		BY	DATE
NOTE BOOK	SURVEYED		
	PLOTTED		
	TEMPLATE		
	AREAS		
	AREAS CHECKED		
NO.			

ORIGINAL SURVEY		BY	DATE
NOTE BOOK	SURVEYED		
	PLOTTED		
	TEMPLATE		
	AREAS		
	AREAS CHECKED		
NO.			

Farnsworth GROUP, INC.
2709 McGraw Drive
Bloomington, Illinois 61704
309/663-8435, 309/663-1571 fax

DESIGNED - JJO	REVISED -		
DRAWN - JJO	REVISED -		
CHECKED - MSW	REVISED -		
DATE - 04/10/14	REVISED -		

STATE OF ILLINOIS
DEPARTMENT OF TRANSPORTATION

IL ROUTE 1
CROSS SECTIONS
STAGE II

SCALE: | SHEET NO. OF SHEETS | STA. 19+92.27 TO STA. 21+00.00

F.A.P. RTE.	SECTION	COUNTY	TOTAL SHEETS	SHEET NO.
332	(3)BR	IROQUOIS	100	84

CONTRACT NO. 66736

ILLINOIS FED. AID PROJECT

24-8052

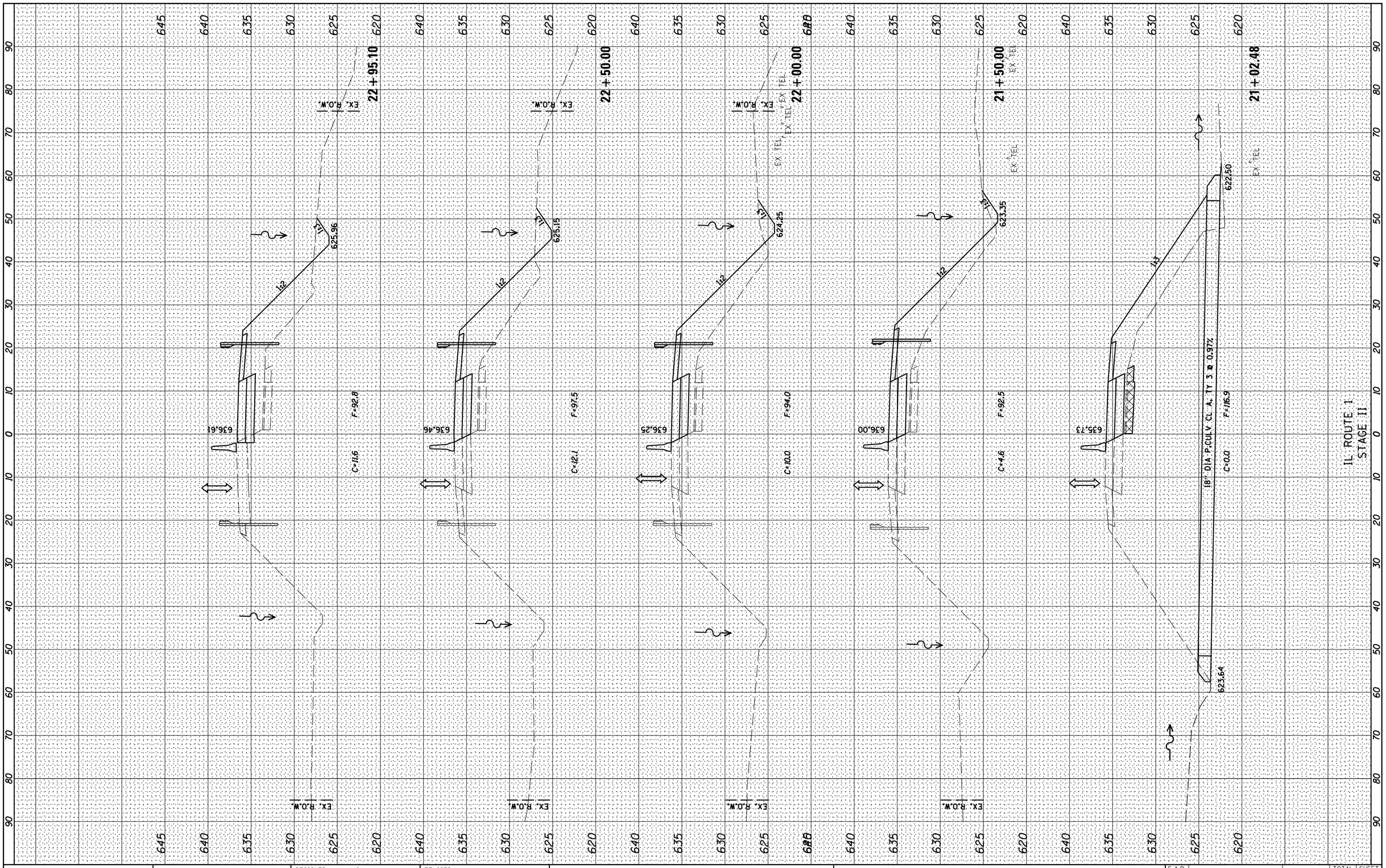

FINAL SURVEY	BY	DATE
SURVEYED		
PLOTTED		
TEMPLATE		
AREAS		
AREAS CHECKED		
NOTE BOOK		
NO.		

ORIGINAL SURVEY	BY	DATE
SURVEYED		
PLOTTED		
TEMPLATE		
AREAS		
AREAS CHECKED		
NOTE BOOK		
NO.		

Farnsworth GROUP, INC.
2709 McGraw Drive
Bloomington, Illinois 61704
309/663-8435, 309/663-1571 fax

DESIGNED - JJO	REVISED -		
DRAWN - JJO	REVISED -		
CHECKED - MSW	REVISED -		
DATE - 04/10/14	REVISED -		

STATE OF ILLINOIS
DEPARTMENT OF TRANSPORTATION

IL ROUTE 1
CROSS SECTIONS
STAGE II

SCALE: | SHEET NO. OF SHEETS | STA. 21+02.48 TO STA. 22+95.10

F.A.P. RTE.	SECTION	COUNTY	TOTAL SHEETS	SHEET NO.
332	(3)BR	IROQUOIS	100	85

CONTRACT NO. 66736

ILLINOIS FED. AID PROJECT

24-8052

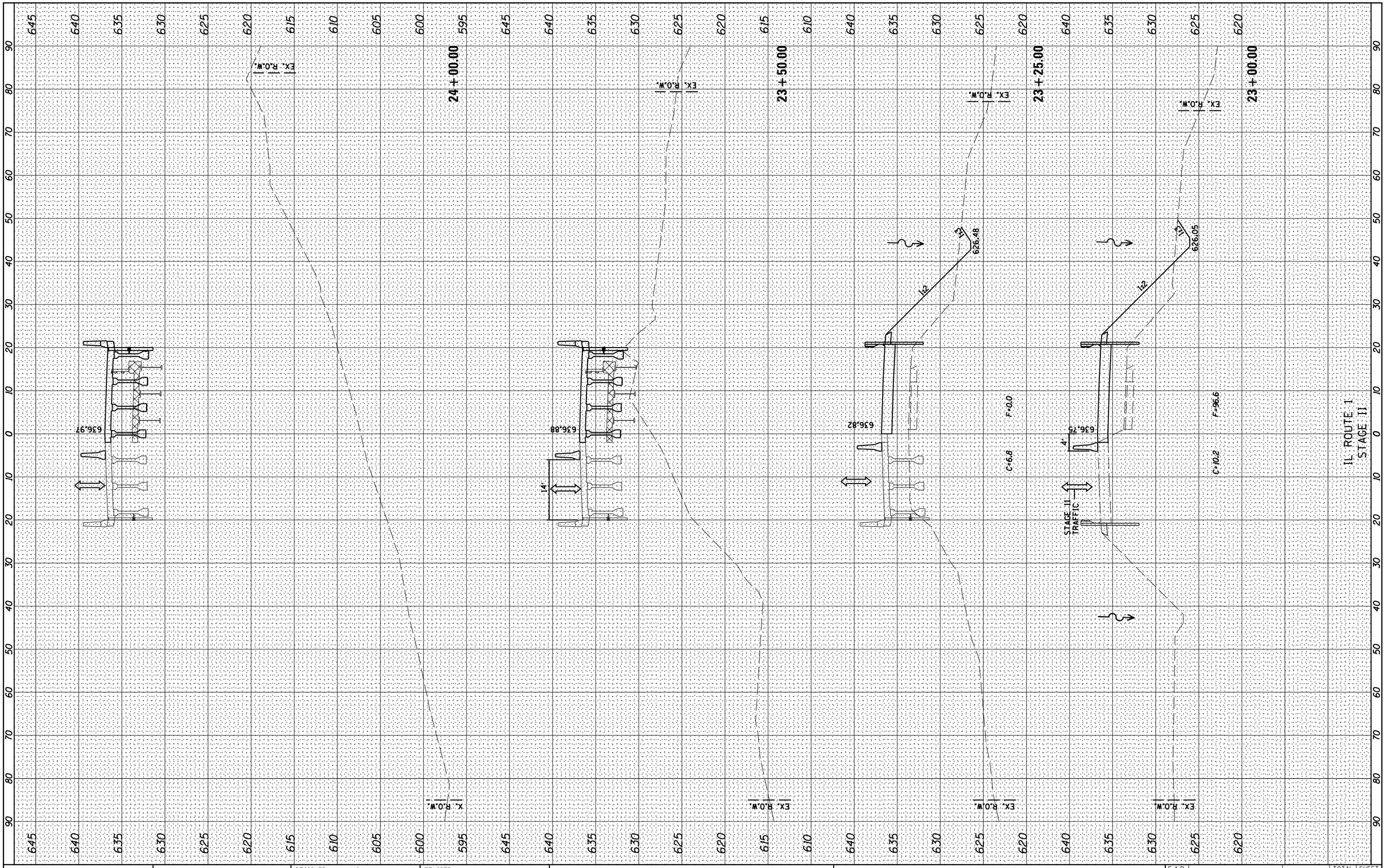

FINAL SURVEY		BY	DATE
NOTE BOOK	SURVEYED		
	PLOTTED		
	TEMPLATE		
	AREAS		
	AREAS CHECKED		
NO.			

ORIGINAL SURVEY		BY	DATE
NOTE BOOK	SURVEYED		
	PLOTTED		
	TEMPLATE		
	AREAS		
	AREAS CHECKED		
NO.			

Farnsworth GROUP, INC.
2709 McGraw Drive
Bloomington, Illinois 61704
309/663-8435, 309/663-1571 fax

DESIGNED - JJO	REVISED -		
DRAWN - JJO	REVISED -		
CHECKED - MSW	REVISED -		
DATE - 04/10/14	REVISED -		

STATE OF ILLINOIS
DEPARTMENT OF TRANSPORTATION

IL ROUTE 1
CROSS SECTIONS
STAGE II

SCALE: | SHEET NO. OF SHEETS | STA. 23+00.00 TO STA. 24+00.00

F.A.P. RTE.	SECTION	COUNTY	TOTAL SHEETS	SHEET NO.
332	(3)BR	IROQUOIS	100	86

CONTRACT NO. 66736

ILLINOIS FED. AID PROJECT

24-8052

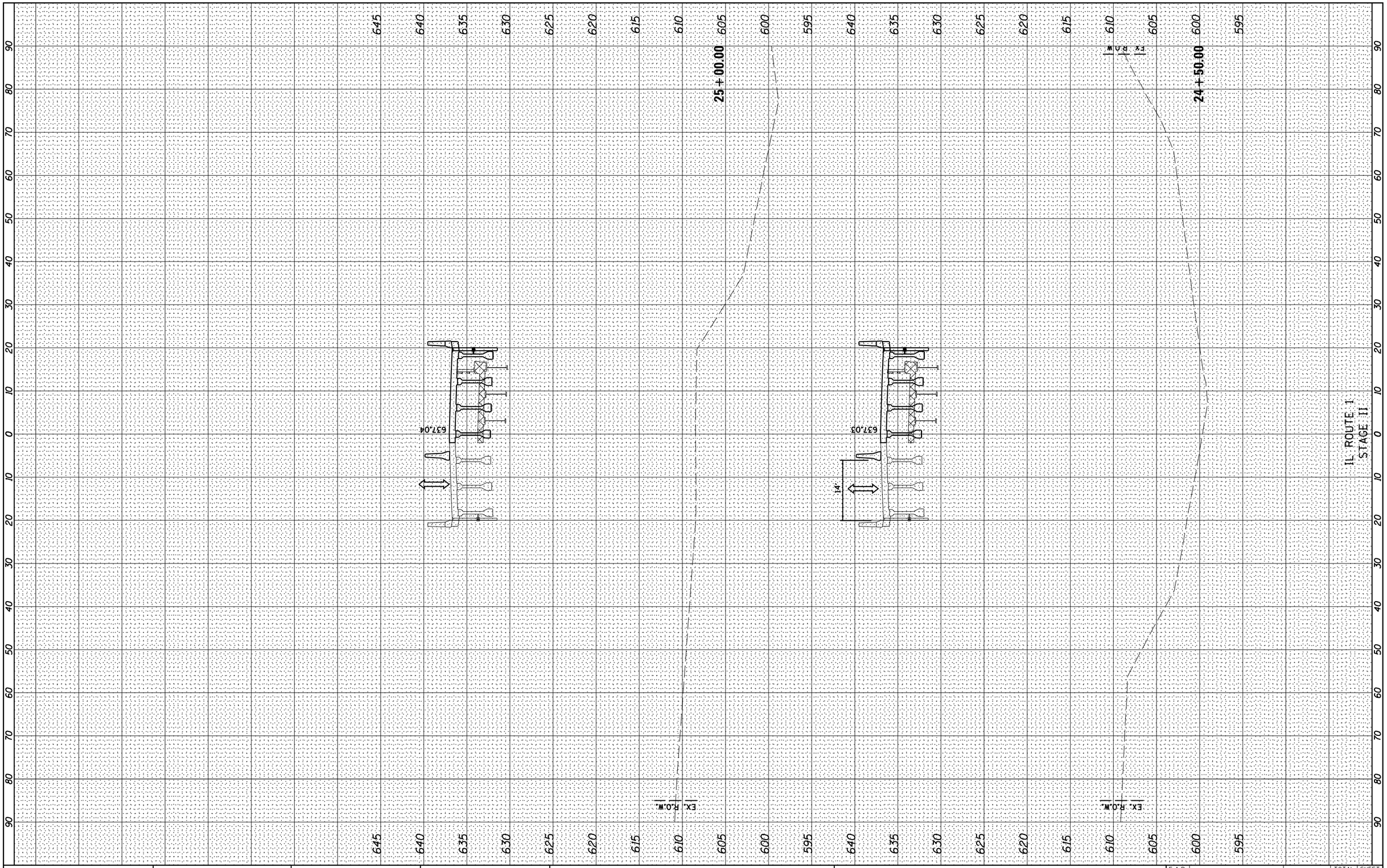

FINAL SURVEY		BY	DATE
	SURVEYED		
	PLOTTED		
NOTE BOOK	TEMPLATE		
	AREAS		
	AREAS CHECKED		
NO.			

ORIGINAL SURVEY		BY	DATE
	SURVEYED		
	PLOTTED		
NOTE BOOK	TEMPLATE		
	AREAS		
	AREAS CHECKED		
NO.			

Farnsworth GROUP, INC.
2709 McGraw Drive
Bloomington, Illinois 61704
309/663-8435, 309/663-1571 fax

DESIGNED - JJO	REVISED -	
DRAWN - JJO	REVISED -	
CHECKED - MSW	REVISED -	
DATE - 04/10/14	REVISED -	

STATE OF ILLINOIS
DEPARTMENT OF TRANSPORTATION

IL ROUTE 1
CROSS SECTIONS
STAGE II

SCALE: | SHEET NO. OF SHEETS | STA. 24+50.00 TO STA. 25+00.00

F.A.P. RTE.	SECTION	COUNTY	TOTAL SHEETS	SHEET NO.
332	(3)BR	IROQUOIS	100	87

CONTRACT NO. 66736

ILLINOIS FED. AID PROJECT

24-8052

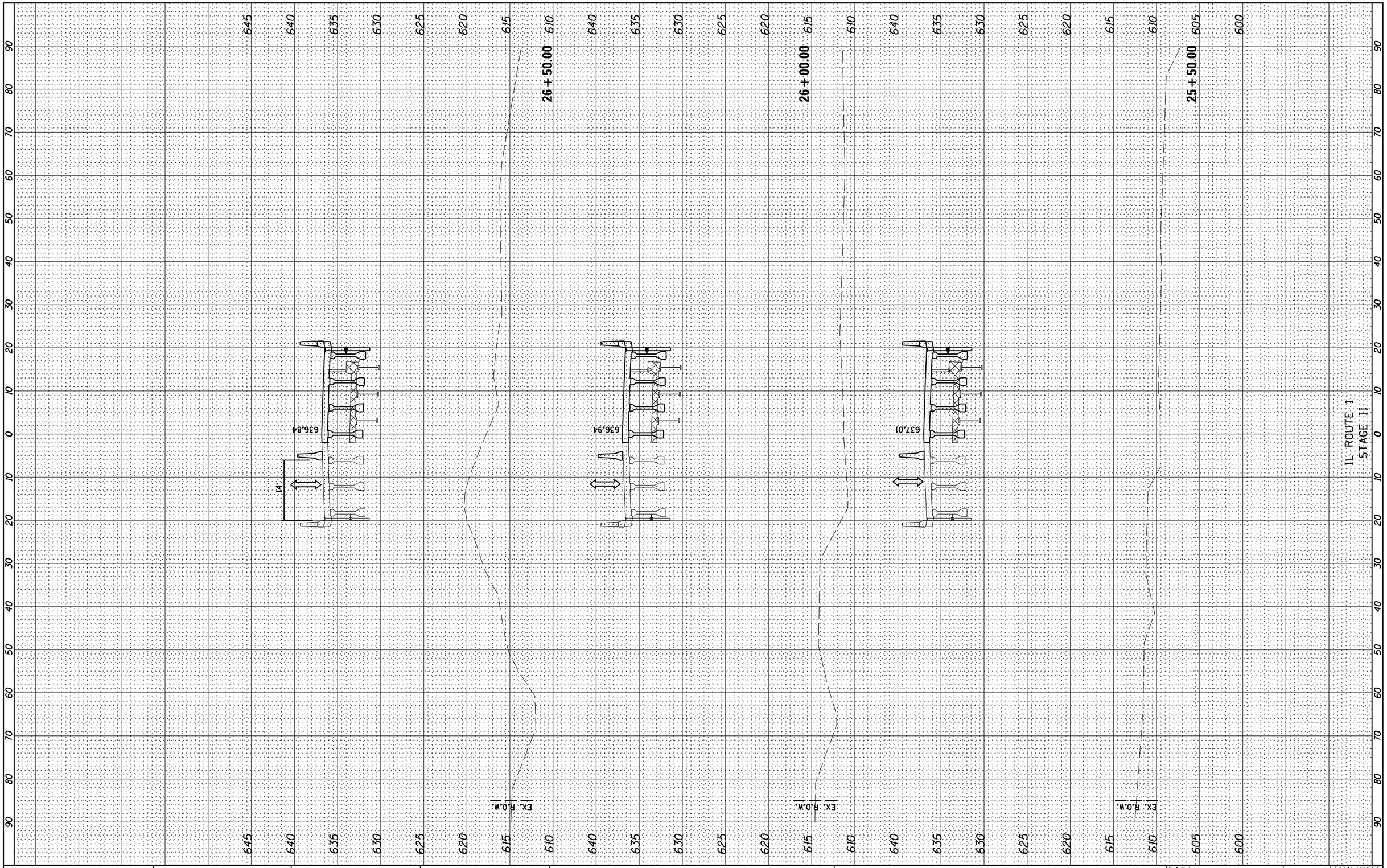

FINAL SURVEY	BY	DATE
SURVEYED		
PLOTTED		
TEMPLATE		
AREAS		
AREAS CHECKED		

NOTE BOOK
NO.

ORIGINAL SURVEY	BY	DATE
SURVEYED		
PLOTTED		
TEMPLATE		
AREAS		
AREAS CHECKED		

NOTE BOOK
NO.

Farnsworth GROUP, INC.
2709 McGraw Drive
Bloomington, Illinois 61704
309/663-8435, 309/663-1571 fax

DESIGNED - JJO	REVISED -	
DRAWN - JJO	REVISED -	
CHECKED - MSW	REVISED -	
DATE - 04/10/14	REVISED -	

STATE OF ILLINOIS
DEPARTMENT OF TRANSPORTATION

IL ROUTE 1
CROSS SECTIONS
STAGE II

SCALE: | SHEET NO. OF SHEETS | STA. 25+50.00 TO STA. 26+50.00

F.A.P. RTE.	SECTION	COUNTY	TOTAL SHEETS	SHEET NO.
332	(3)BR	IROQUOIS	100	88

CONTRACT NO. 66736

ILLINOIS FED. AID PROJECT

24-8052

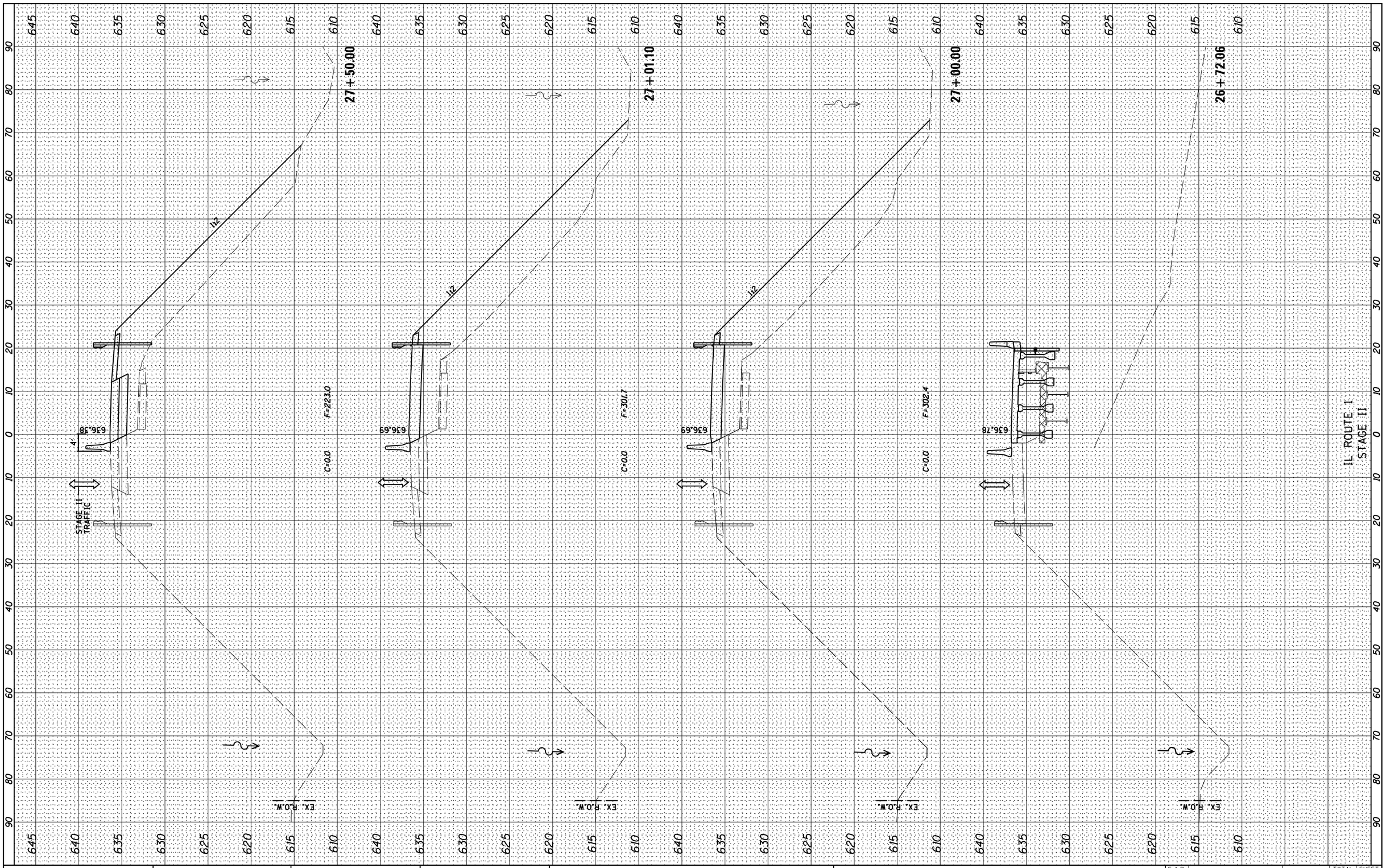

FINAL SURVEY		BY	DATE
NOTE BOOK	SURVEYED		
	PLOTTED		
	TEMPLATE		
	AREAS		
NO.	AREAS CHECKED		

ORIGINAL SURVEY		BY	DATE
NOTE BOOK	SURVEYED		
	PLOTTED		
	TEMPLATE		
	AREAS		
NO.	AREAS CHECKED		

Farnsworth GROUP, INC.
2709 McGraw Drive
Bloomington, Illinois 61704
309/663-8435, 309/663-1571 fax

DESIGNED - JJO	REVISED -		
DRAWN - JJO	REVISED -		
CHECKED - MSW	REVISED -		
DATE - 04/10/14	REVISED -		

STATE OF ILLINOIS
DEPARTMENT OF TRANSPORTATION

IL ROUTE 1
CROSS SECTIONS
STAGE II

SCALE: | SHEET NO. OF SHEETS | STA. 26+72.06 TO STA. 27+50.00

F.A.P. RTE.	SECTION	COUNTY	TOTAL SHEETS	SHEET NO.
332	(3)BR	IROQUOIS	100	89

CONTRACT NO. 66736

ILLINOIS FED. AID PROJECT

24-8052

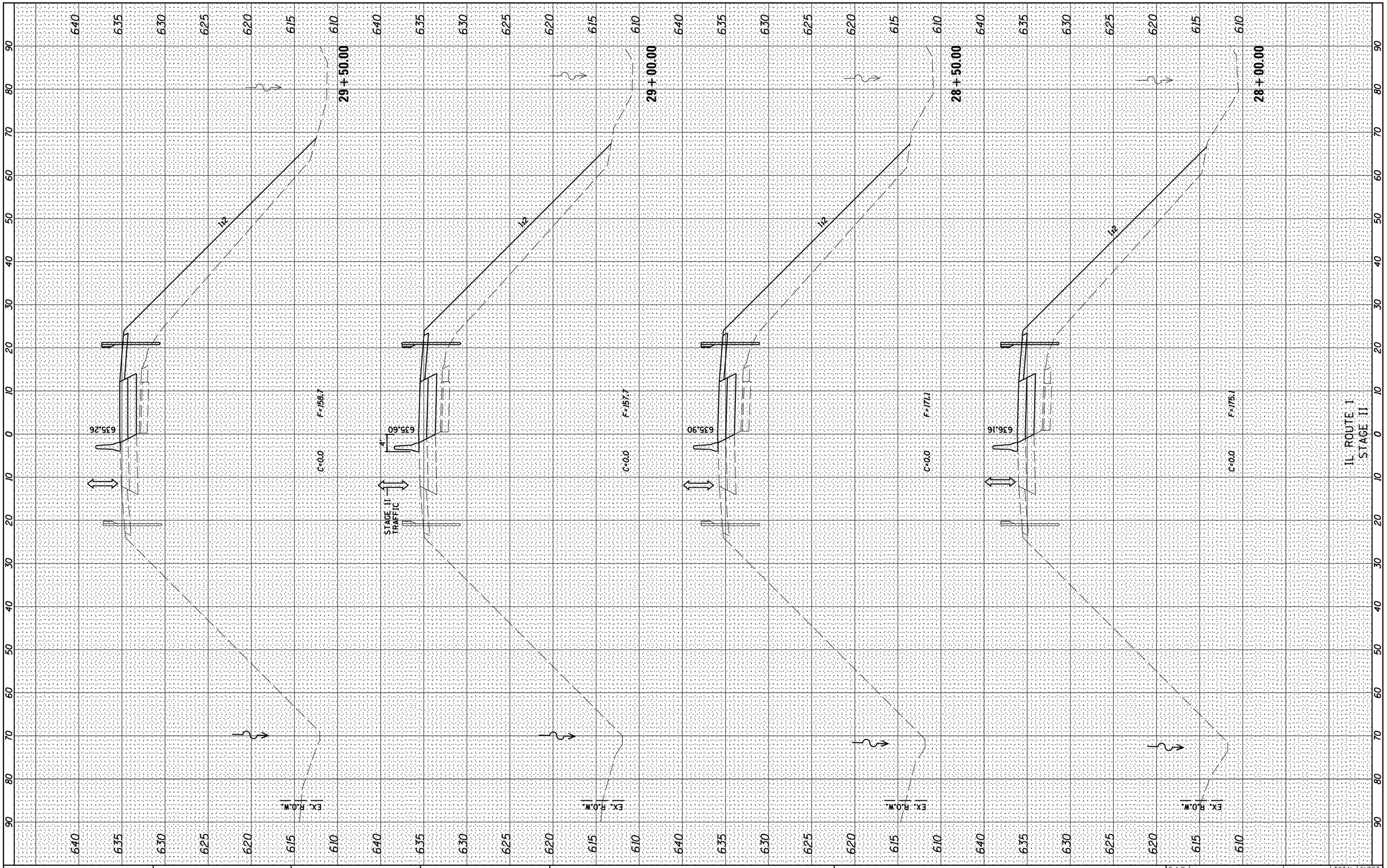

FINAL SURVEY	BY	DATE
SURVEYED		
PLOTTED		
TEMPLATE		
AREAS		
AREAS CHECKED		
NOTE BOOK		
NO.		

ORIGINAL SURVEY	BY	DATE
SURVEYED		
PLOTTED		
TEMPLATE		
AREAS		
AREAS CHECKED		
NOTE BOOK		
NO.		

Farnsworth GROUP, INC.
2709 McGraw Drive
Bloomington, Illinois 61704
309/663-8435, 309/663-1571 fax

DESIGNED - JJO	REVISED -		
DRAWN - JJO	REVISED -		
CHECKED - MSW	REVISED -		
DATE - 04/10/14	REVISED -		

STATE OF ILLINOIS
DEPARTMENT OF TRANSPORTATION

IL ROUTE 1
CROSS SECTIONS
STAGE II

SCALE: | SHEET NO. OF SHEETS | STA. 28+00.00 TO STA. 29+50.00

F.A.P. RTE.	SECTION	COUNTY	TOTAL SHEETS	SHEET NO.
332	(3)BR	IROQUOIS	100	90

CONTRACT NO. 66736

ILLINOIS FED. AID PROJECT

24-8052

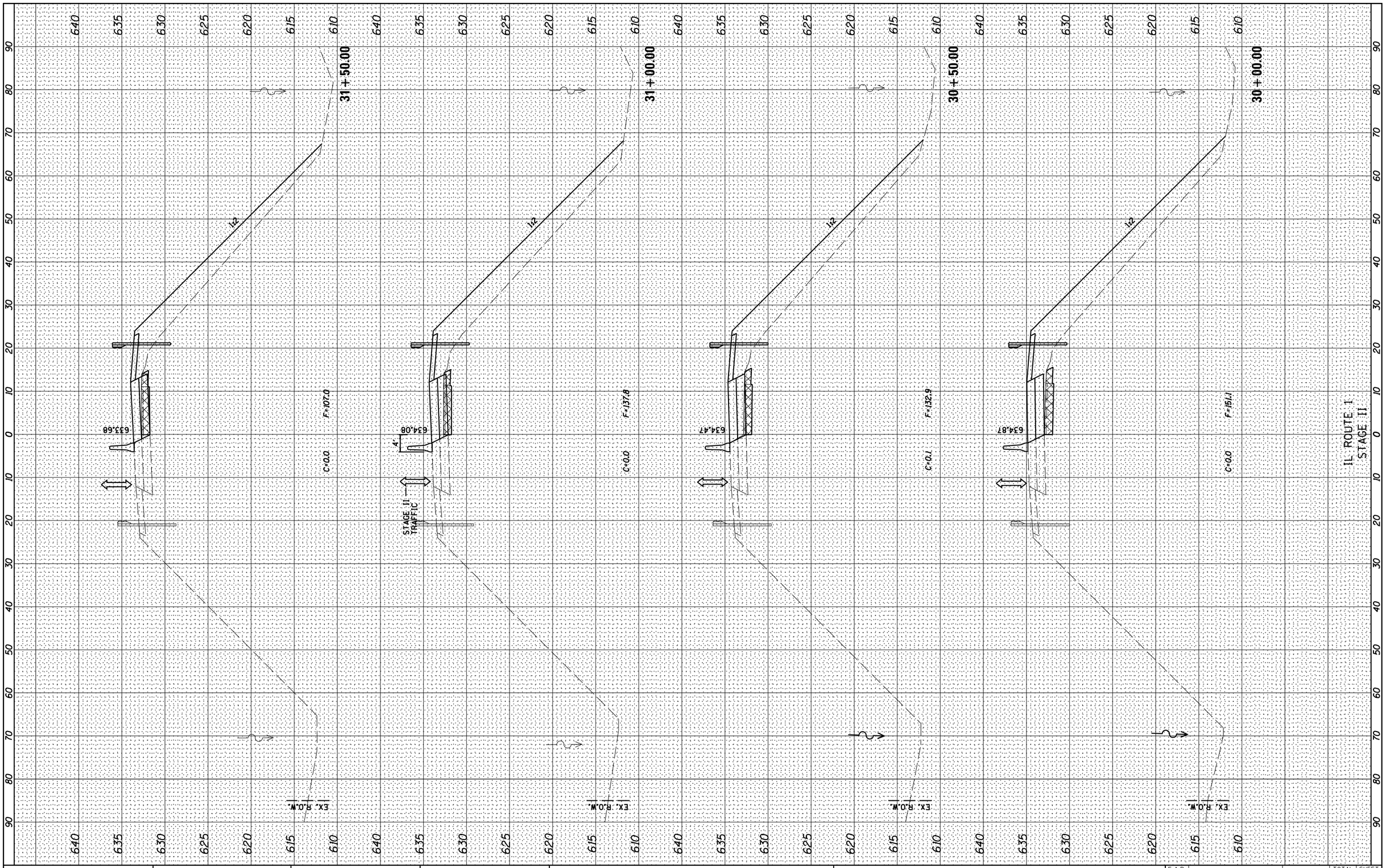

IL ROUTE 1
STAGE II

FINAL SURVEY		BY	DATE
NOTE BOOK	SURVEYED		
	PLOTTED		
	TEMPLATE		
	AREAS		
	AREAS CHECKED		
NO.			

ORIGINAL SURVEY		BY	DATE
NOTE BOOK	SURVEYED		
	PLOTTED		
	TEMPLATE		
	AREAS		
	AREAS CHECKED		
NO.			

Farnsworth GROUP, INC.
2709 McGraw Drive
Bloomington, Illinois 61704
309/663-8435, 309/663-1571 fax

DESIGNED - JJO	REVISED -		
DRAWN - JJO	REVISED -		
CHECKED - MSW	REVISED -		
DATE - 04/10/14	REVISED -		

STATE OF ILLINOIS
DEPARTMENT OF TRANSPORTATION

IL ROUTE 1
CROSS SECTIONS
STAGE II

SCALE: | SHEET NO. OF SHEETS | STA. 30+00.00 TO STA. 31+50.00

F.A.P. RTE.	SECTION	COUNTY	TOTAL SHEETS	SHEET NO.
332	(3)BR	IROQUOIS	100	91

CONTRACT NO. 66736

ILLINOIS FED. AID PROJECT

24-8052

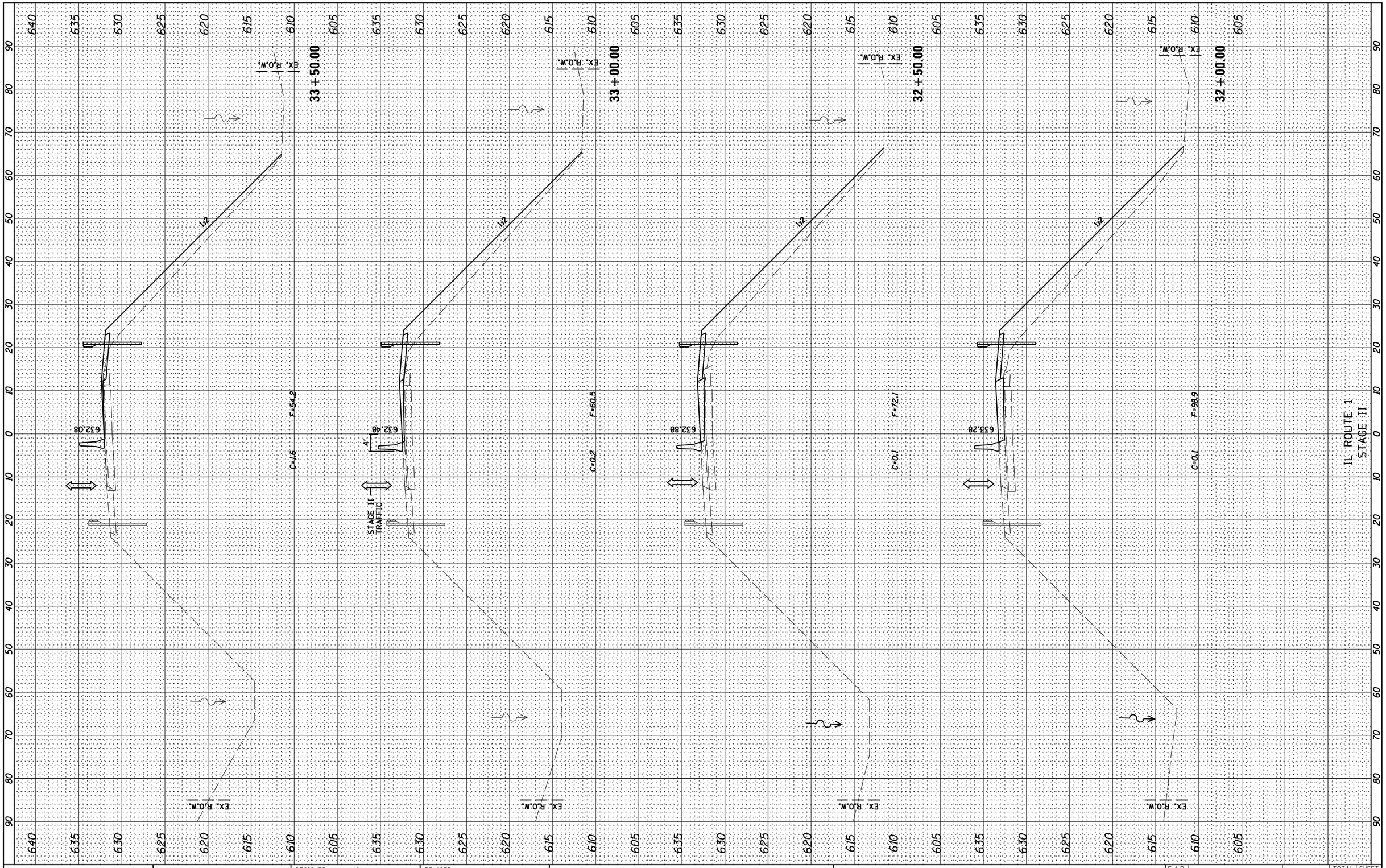

FINAL SURVEY		BY	DATE
NOTE BOOK	SURVEYED		
	PLOTTED		
	TEMPLATE		
	AREAS		
	AREAS CHECKED		
NO.			

ORIGINAL SURVEY		BY	DATE
NOTE BOOK	SURVEYED		
	PLOTTED		
	TEMPLATE		
	AREAS		
	AREAS CHECKED		
NO.			

Farnsworth GROUP, INC.
2709 McGraw Drive
Bloomington, Illinois 61704
309/663-8435, 309/663-1571 fax

DESIGNED - JJO	REVISED -		
DRAWN - JJO	REVISED -		
CHECKED - MSW	REVISED -		
DATE - 04/10/14	REVISED -		

STATE OF ILLINOIS
DEPARTMENT OF TRANSPORTATION

IL ROUTE 1
CROSS SECTIONS
STAGE II

SCALE: | SHEET NO. OF SHEETS | STA. 32+00.00 TO STA. 33+50.00

F.A.P. RTE.	SECTION	COUNTY	TOTAL SHEETS	SHEET NO.
332	(3)BR	IROQUOIS	100	92

CONTRACT NO. 66736

ILLINOIS FED. AID PROJECT

24-8052

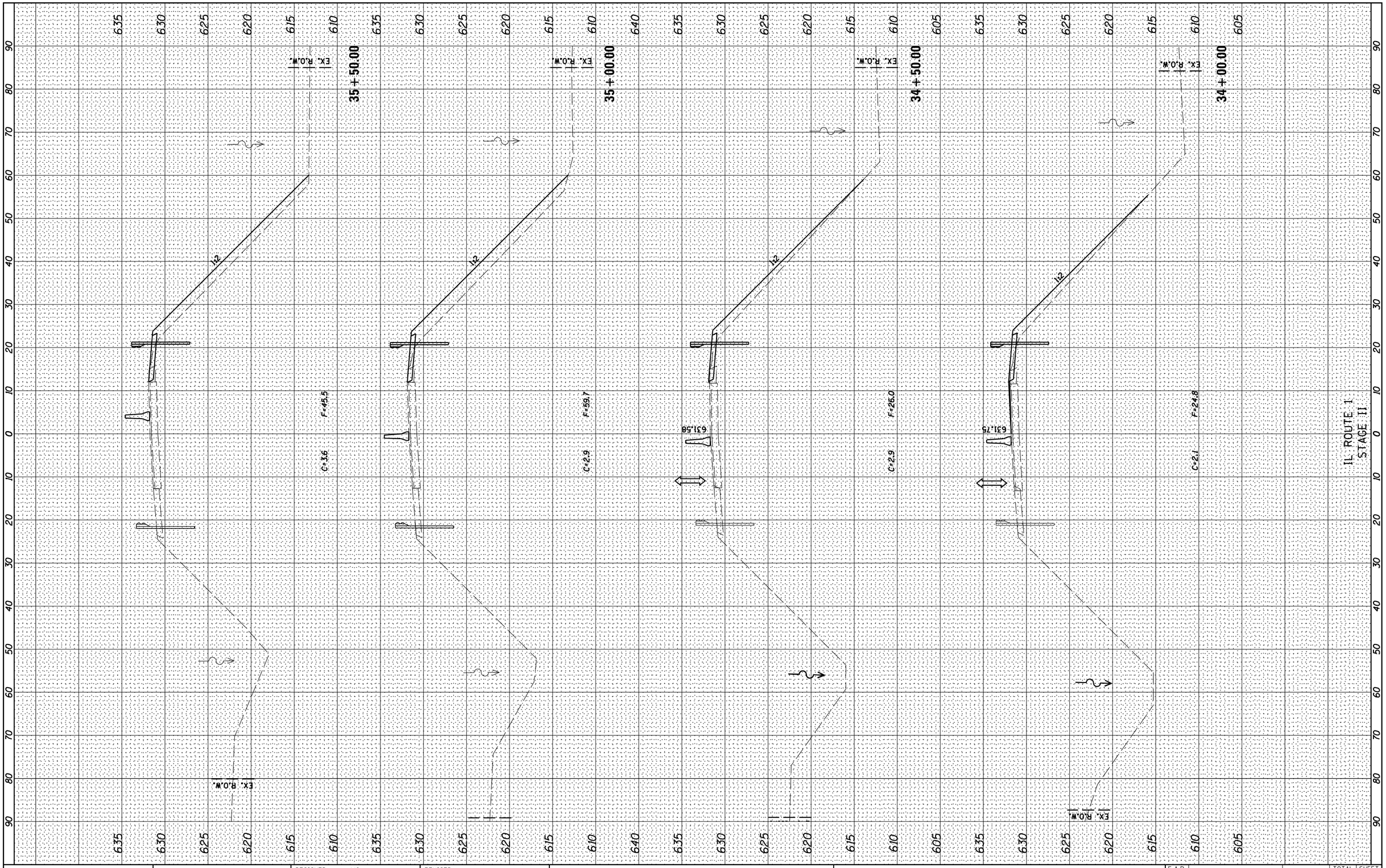

FINAL SURVEY		BY	DATE
NOTE BOOK	SURVEYED		
	PLOTTED		
	TEMPLATE		
	AREAS		
	AREAS CHECKED		
NO.			

ORIGINAL SURVEY		BY	DATE
NOTE BOOK	SURVEYED		
	PLOTTED		
	TEMPLATE		
	AREAS		
	AREAS CHECKED		
NO.			

Farnsworth GROUP, INC.
2709 McGraw Drive
Bloomington, Illinois 61704
309/663-8435, 309/663-1571 fax

DESIGNED - JJO	REVISED -	
DRAWN - JJO	REVISED -	
CHECKED - MSW	REVISED -	
DATE - 04/10/14	REVISED -	

STATE OF ILLINOIS
DEPARTMENT OF TRANSPORTATION

IL ROUTE 1
CROSS SECTIONS
STAGE II

SCALE: | SHEET NO. OF SHEETS | STA. 34+00.00 TO STA. 35+50.00

F.A.P. RTE.	SECTION	COUNTY	TOTAL SHEETS	SHEET NO.
332	(3)BR	IROQUOIS	100	93

CONTRACT NO. 66736

ILLINOIS FED. AID PROJECT

24-8052

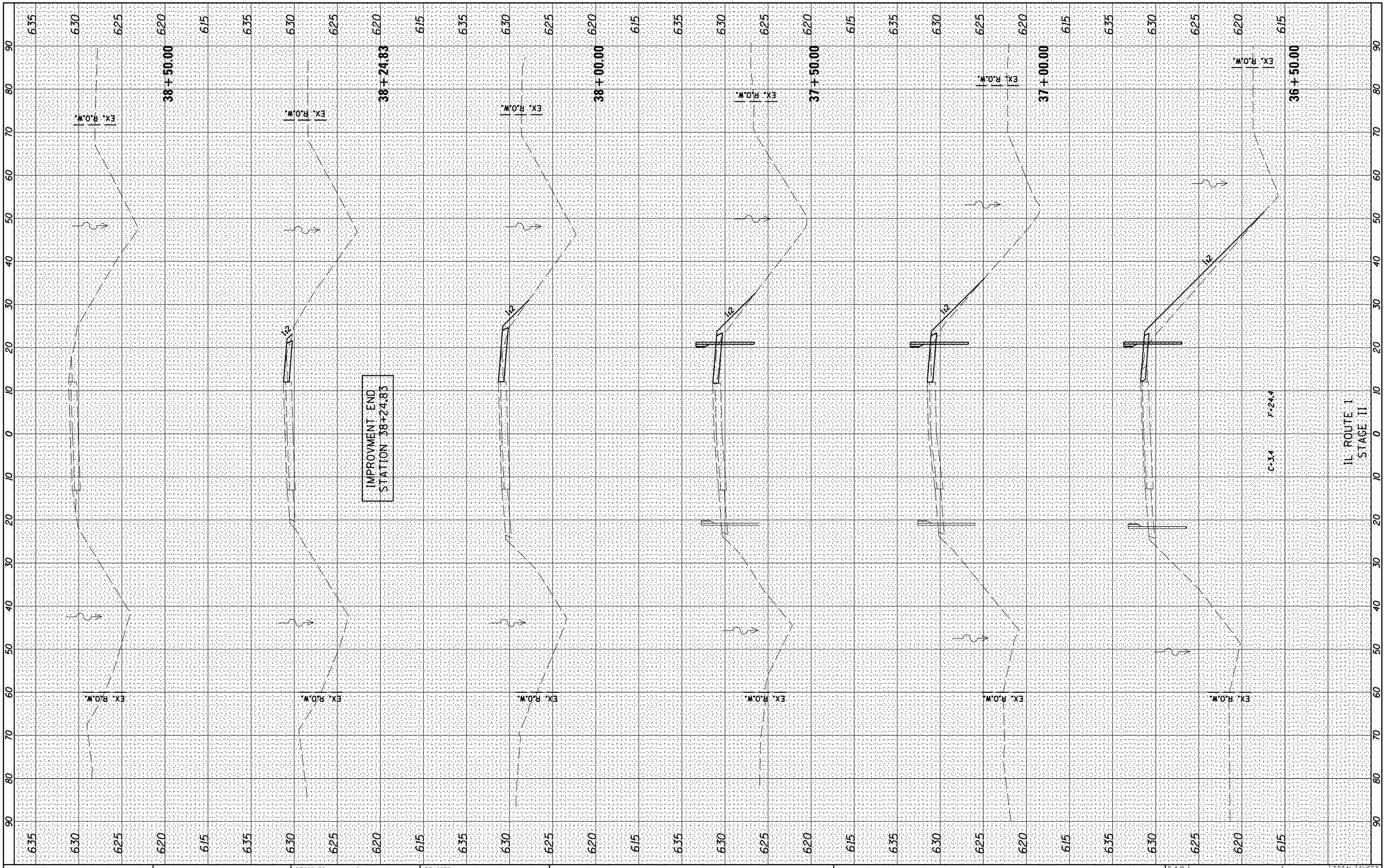

FINAL SURVEY		BY	DATE
	SURVEYED		
	PLOTTED		
NOTE BOOK	TEMPLATE		
	AREAS		
	AREAS CHECKED		
NO.			

ORIGINAL SURVEY		BY	DATE
	SURVEYED		
	PLOTTED		
NOTE BOOK	TEMPLATE		
	AREAS		
	AREAS CHECKED		
NO.			

Farnsworth GROUP, INC.
2709 McGraw Drive
Bloomington, Illinois 61704
309/663-8435, 309/663-1571 fax

DESIGNED - JJO	REVISED -		
DRAWN - JJO	REVISED -		
CHECKED - MSW	REVISED -		
DATE - 04/10/14	REVISED -		

STATE OF ILLINOIS
DEPARTMENT OF TRANSPORTATION

IL ROUTE 1
CROSS SECTIONS
STAGE II

SCALE: | SHEET NO. OF SHEETS | STA. 36+50.00 TO STA. 38+50.00

F.A.P. RTE.	SECTION	COUNTY	TOTAL SHEETS	SHEET NO.
332	(3)BR	IROQUOIS	100	94

CONTRACT NO. 66736

ILLINOIS FED. AID PROJECT

24-8052

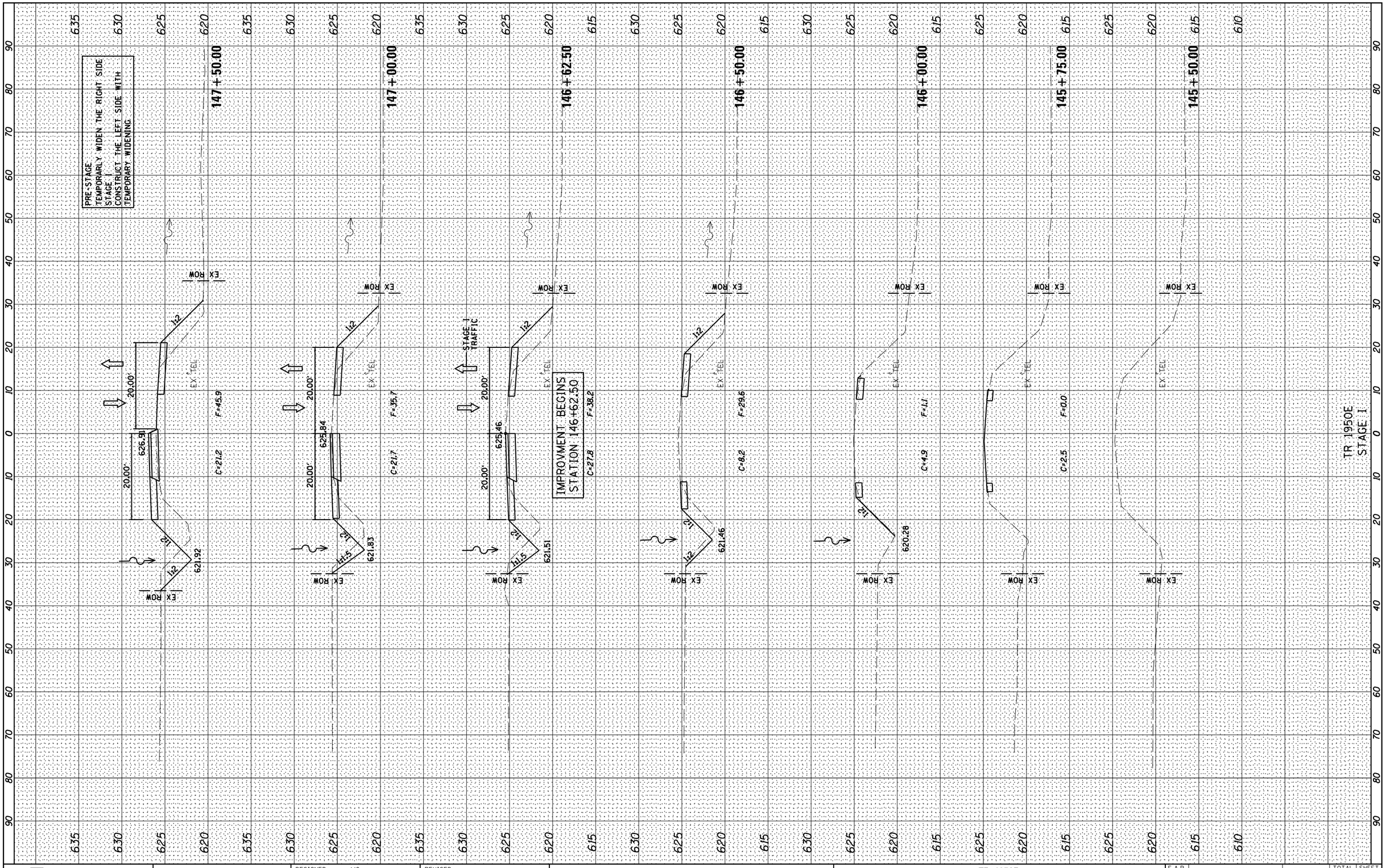

FINAL SURVEY		BY	DATE
NOTE BOOK	SURVEYED		
	PLOTTED		
	TEMPLATE		
	AREAS		
NO.	AREAS CHECKED		

ORIGINAL SURVEY		BY	DATE
NOTE BOOK	SURVEYED		
	PLOTTED		
	TEMPLATE		
	AREAS		
NO.	AREAS CHECKED		

Farnsworth GROUP, INC.
2709 McGraw Drive
Bloomington, Illinois 61704
309/663-8435, 309/663-1571 fax

DESIGNED - JJO	REVISED -		
DRAWN - JJO	REVISED -		
CHECKED - MSW	REVISED -		
DATE - 04/10/14	REVISED -		

STATE OF ILLINOIS
DEPARTMENT OF TRANSPORTATION

TR 1950E
CROSS SECTIONS
STAGE I

SCALE: | SHEET NO. OF SHEETS | STA. 145+50.00 TO STA. 147+50.00

F.A.P. RTE.	SECTION	COUNTY	TOTAL SHEETS	SHEET NO.
332	(3)BR	IROQUOIS	100	95

CONTRACT NO. 66736

ILLINOIS FED. AID PROJECT

24-8052

ORIGINAL SURVEY		BY	DATE
NOTE BOOK	SURVEYED		
	PLOTTED		
	TEMPLATE		
	AREAS		
NO.	AREAS CHECKED		

FINAL SURVEY		BY	DATE
NOTE BOOK	SURVEYED		
	PLOTTED		
	TEMPLATE		
	AREAS		
NO.	AREAS CHECKED		

Farnsworth GROUP INC.
2709 McGraw Drive
Bloomington, IL 61704
309/663-8435, 309/663-1571 fax

DESIGNED	-	JJO	REVISED -
DRAWN	-	JJO	REVISED -
CHECKED	-	MSW	REVISED -
DATE	-	04/10/14	REVISED -

STATE OF ILLINOIS
DEPARTMENT OF TRANSPORTATION

TR 1950E
CROSS SECTIONS
STAGE I

SCALE:

SHEET NO. OF SHEETS STA. 148+00.00 TO STA. 150+00.00

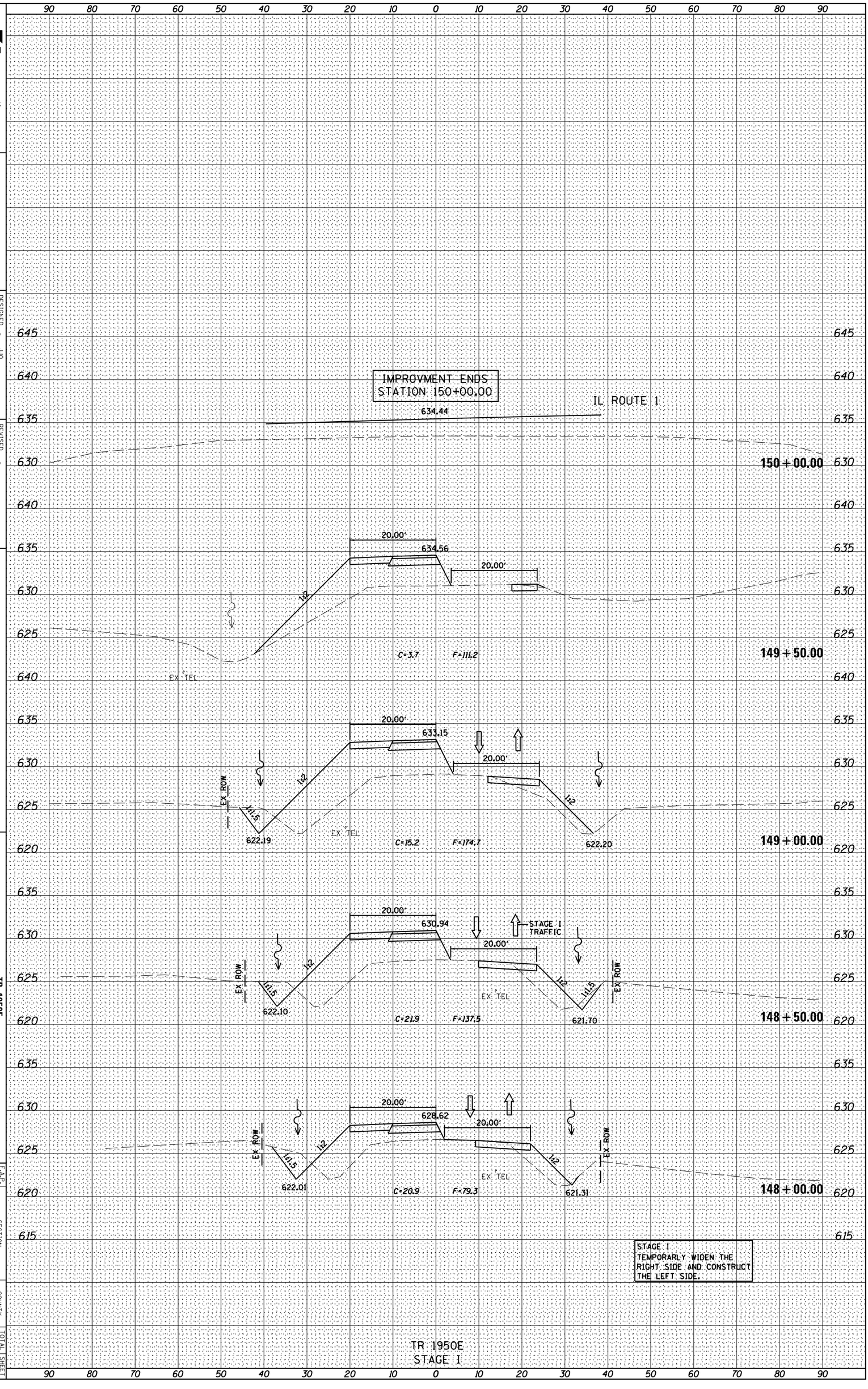

TR 1950E
STAGE I

F.A.P. RTE.	SECTION	COUNTY	TOTAL SHEETS	SHEET NO.
332	(3)BR	IROQUOIS	100	96

ILLINOIS FED. AID PROJECT

CONTRACT NO. 66736

24-8052

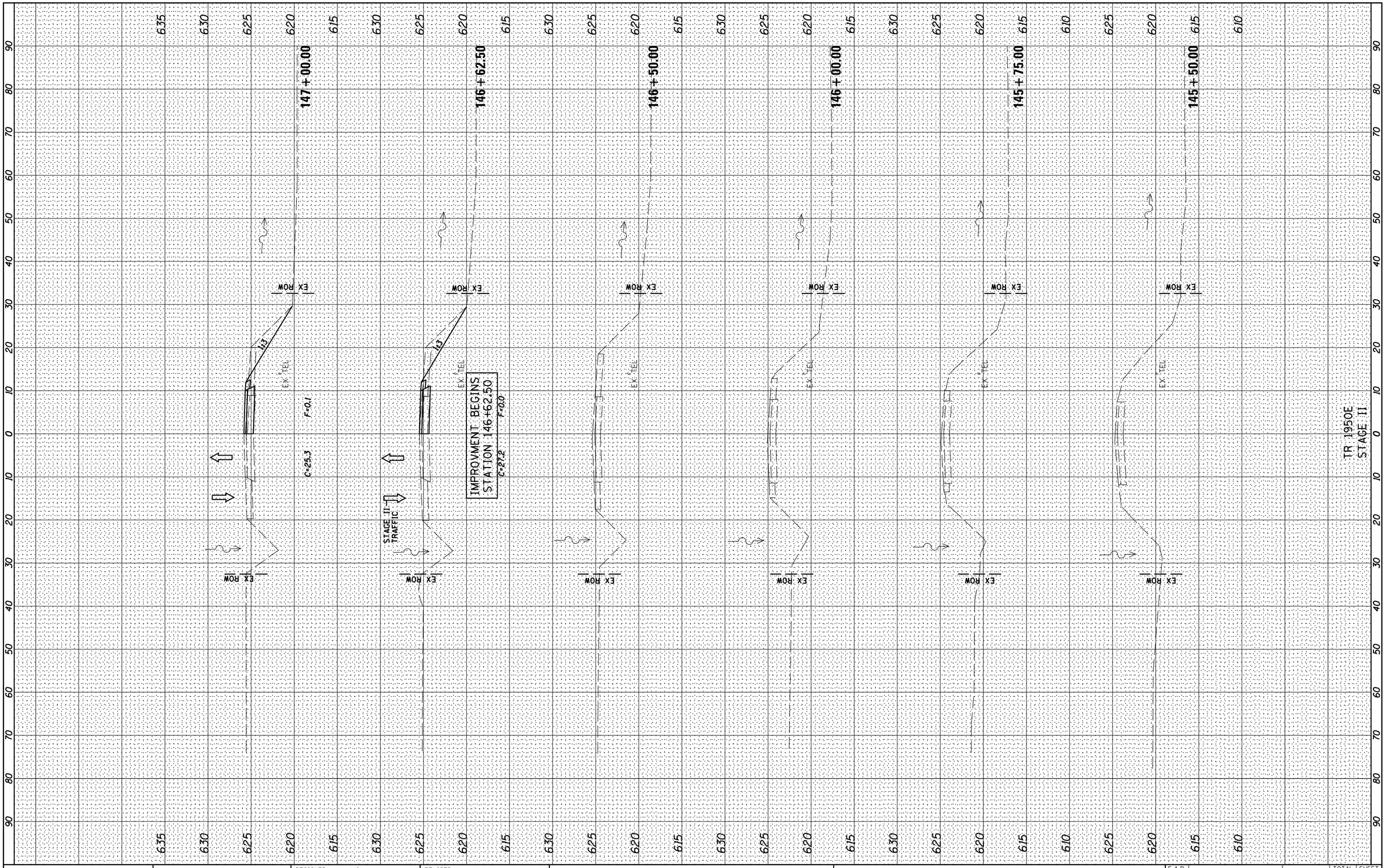

FINAL SURVEY	BY	DATE
SURVEYED		
PLOTTED		
TEMPLATE		
AREAS		
AREAS CHECKED		

NOTE BOOK
NO.

ORIGINAL SURVEY	BY	DATE
SURVEYED		
PLOTTED		
TEMPLATE		
AREAS		
AREAS CHECKED		

NOTE BOOK
NO.

Farnsworth GROUP, INC.
2709 McGraw Drive
Bloomington, Illinois 61704
309/663-8435, 309/663-1571 fax

DESIGNED - JJO	REVISED -	
DRAWN - JJO	REVISED -	
CHECKED - MSW	REVISED -	
DATE - 04/10/14	REVISED -	

STATE OF ILLINOIS
DEPARTMENT OF TRANSPORTATION

TR 1950E
CROSS SECTIONS
STAGE II

SCALE: | SHEET NO. OF SHEETS | STA. 145+50.00 TO STA. 147+00.00

F.A.P. RTE.	SECTION	COUNTY	TOTAL SHEETS	SHEET NO.
332	(3)BR	IROQUOIS	100	97

CONTRACT NO. 66736

ILLINOIS FED. AID PROJECT

24-8052

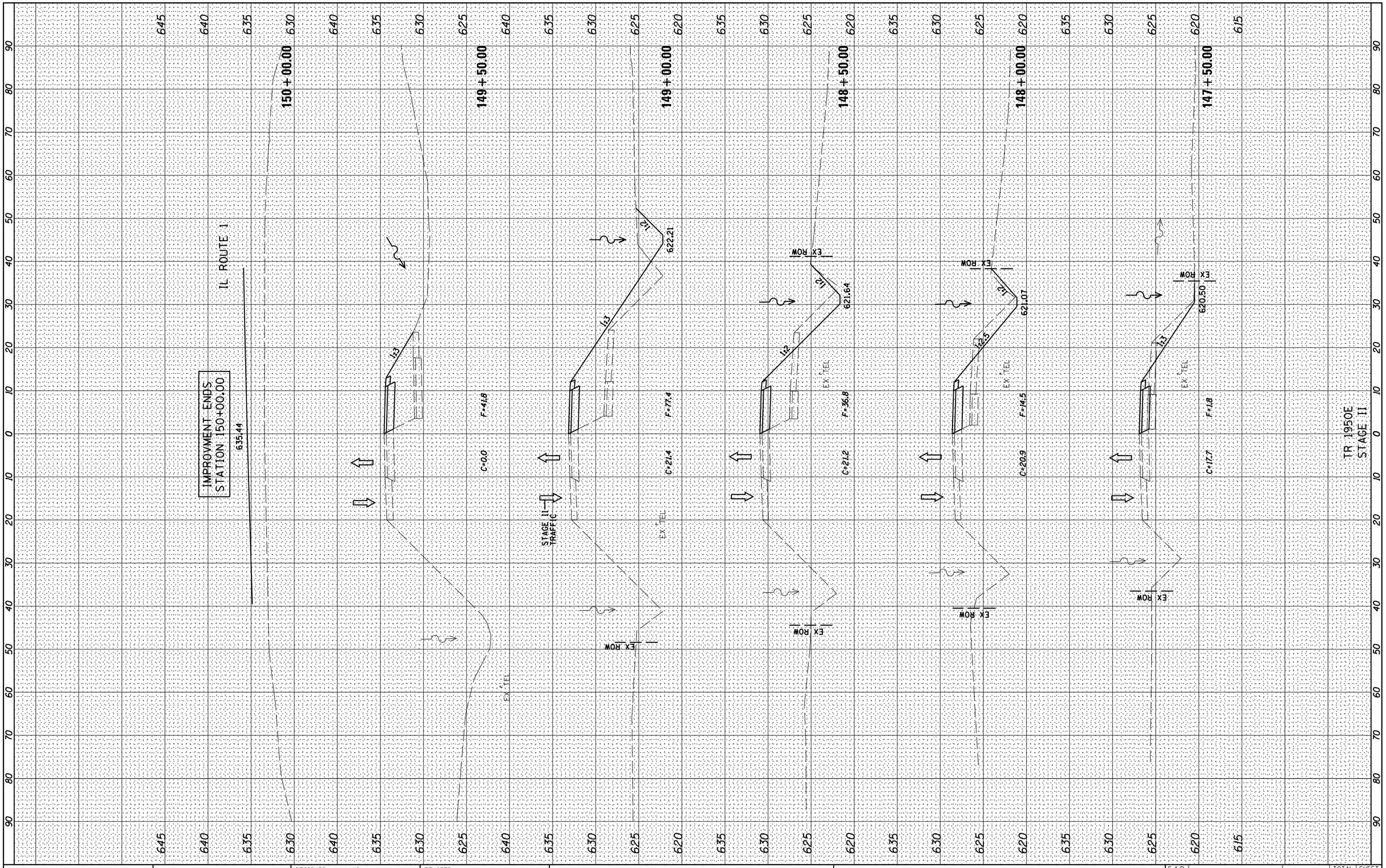

FINAL SURVEY	BY	DATE
SURVEYED		
PLOTTED		
TEMPLATE		
AREAS		
AREAS CHECKED		
NOTE BOOK		
NO.		

ORIGINAL SURVEY	BY	DATE
SURVEYED		
PLOTTED		
TEMPLATE		
AREAS		
AREAS CHECKED		
NOTE BOOK		
NO.		

Farnsworth GROUP, INC.
2709 McGraw Drive
Bloomington, Illinois 61704
309/663-8435, 309/663-1571 fax

DESIGNED - JJO	REVISED -		
DRAWN - JJO	REVISED -		
CHECKED - MSW	REVISED -		
DATE - 04/10/14	REVISED -		

STATE OF ILLINOIS
DEPARTMENT OF TRANSPORTATION

TR 1950E
CROSS SECTIONS
STAGE II

SCALE: | SHEET NO. OF SHEETS | STA. 147+50.00 TO STA. 150+00.00

F.A.P. RTE.	SECTION	COUNTY	TOTAL SHEETS	SHEET NO.
332	(3)BR	IROQUOIS	100	98

CONTRACT NO. 66736

ILLINOIS FED. AID PROJECT

24-8052

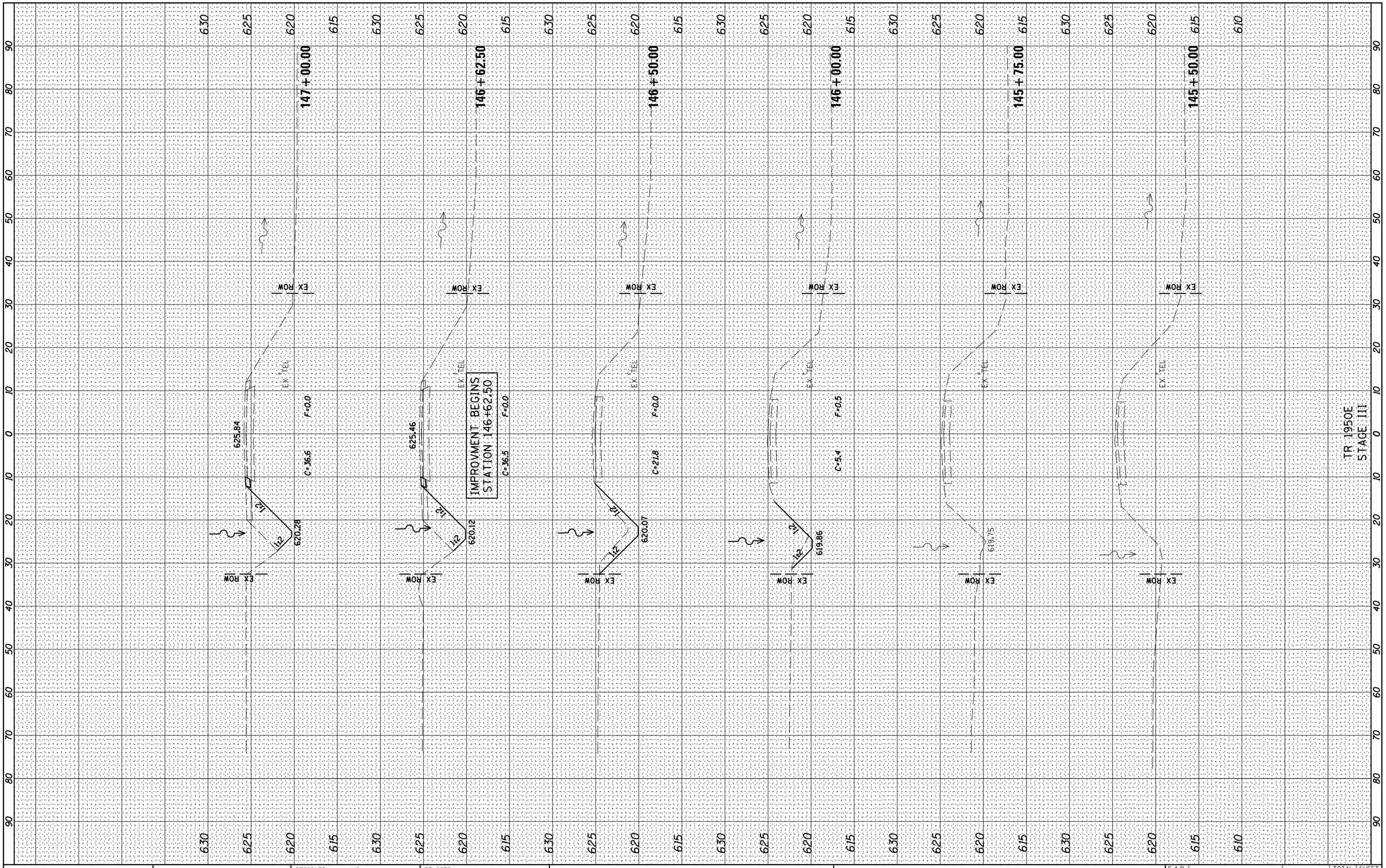

FINAL SURVEY	BY	DATE
SURVEYED		
PLOTTED		
TEMPLATE		
AREAS		
AREAS CHECKED		
NOTE BOOK		
NO.		

ORIGINAL SURVEY	BY	DATE
SURVEYED		
PLOTTED		
TEMPLATE		
AREAS		
AREAS CHECKED		
NOTE BOOK		
NO.		

Farnsworth GROUP, INC.
2709 McGraw Drive
Bloomington, Illinois 61704
309/663-8435, 309/663-1571 fax

DESIGNED - JJO	REVISED -		
DRAWN - JJO	REVISED -		
CHECKED - MSW	REVISED -		
DATE - 04/10/14	REVISED -		

STATE OF ILLINOIS
DEPARTMENT OF TRANSPORTATION

TR 1950E
CROSS SECTIONS
STAGE III

SCALE: | SHEET NO. OF SHEETS | STA. 145+50.00 TO STA. 147+00.00

F.A.P. RTE.	SECTION	COUNTY	TOTAL SHEETS	SHEET NO.
332	(3)BR	IROQUOIS	100	99

CONTRACT NO. 66736

ILLINOIS FED. AID PROJECT

24-8052

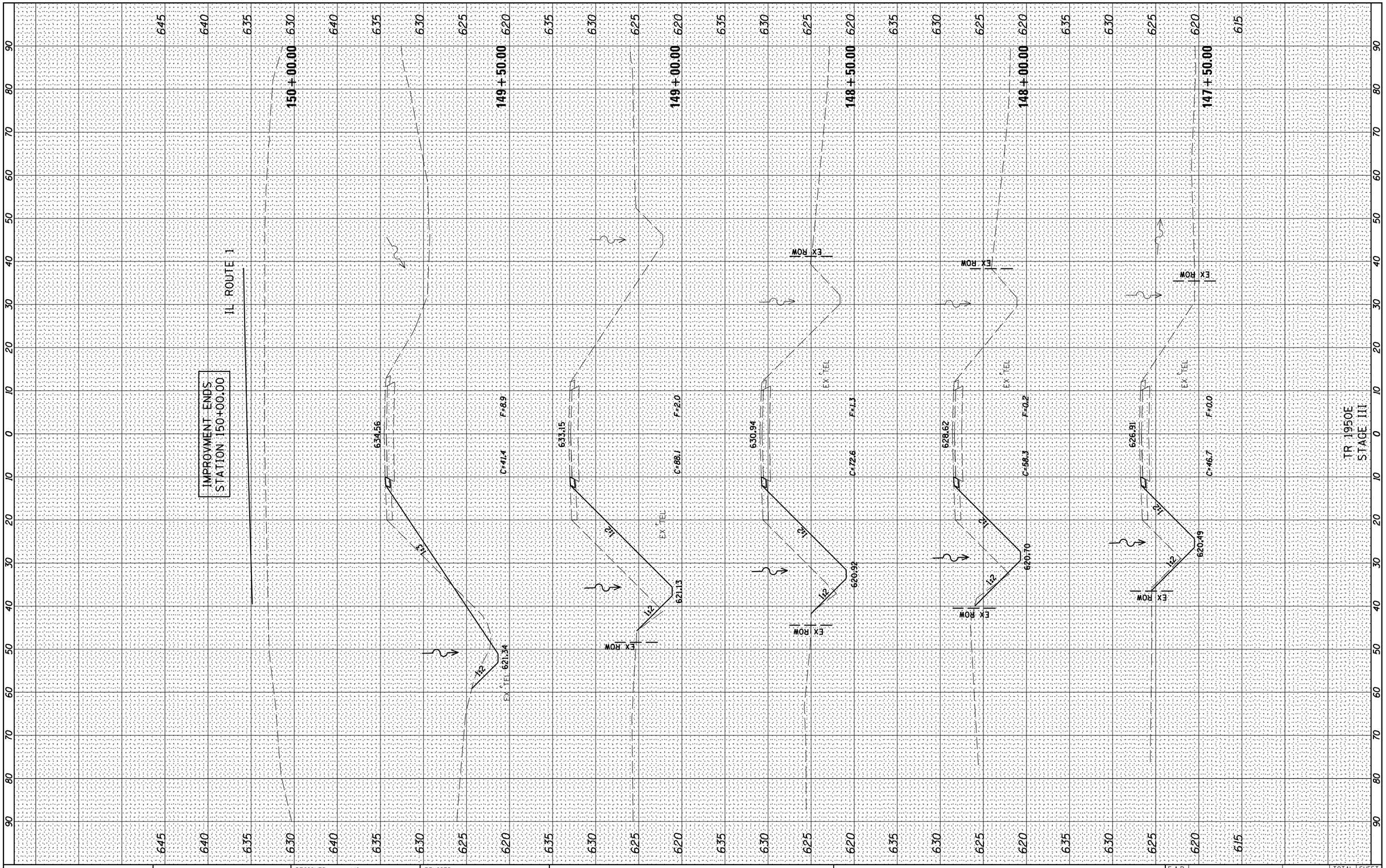

FINAL SURVEY		BY	DATE
NOTE BOOK	SURVEYED		
	PLOTTED		
	TEMPLATE		
	AREAS		
NO.	AREAS CHECKED		

ORIGINAL SURVEY		BY	DATE
NOTE BOOK	SURVEYED		
	PLOTTED		
	TEMPLATE		
	AREAS		
NO.	AREAS CHECKED		

Farnsworth GROUP, INC.
2709 McGraw Drive
Bloomington, Illinois 61704
309/663-8435, 309/663-1571 fax

DESIGNED - JJO	REVISED -		
DRAWN - JJO	REVISED -		
CHECKED - MSW	REVISED -		
DATE - 04/10/14	REVISED -		

STATE OF ILLINOIS
DEPARTMENT OF TRANSPORTATION

TR 1950E
CROSS SECTIONS
STAGE III

SCALE: | SHEET NO. OF SHEETS | STA. 147+50.00 TO STA. 150+00.00

F.A.P. RTE.	SECTION	COUNTY	TOTAL SHEETS	SHEET NO.
332	(3)BR	IROQUOIS	100	100

CONTRACT NO. 66736

ILLINOIS FED. AID PROJECT

24-8052