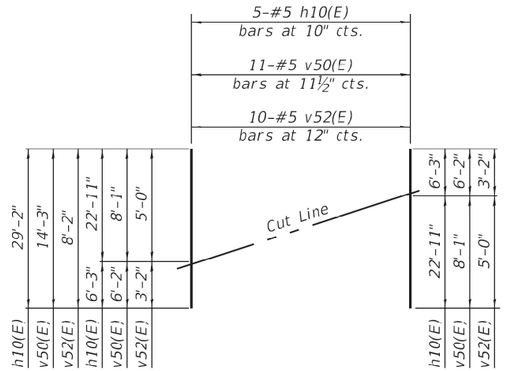

FIELD CUTTING DIAGRAM

Order bars shown full length. Cut as shown and use remainder of bars in opposite face of wall.

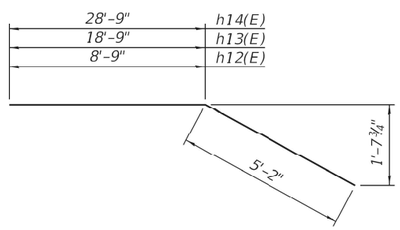

Bars h12(E), h13(E), h14(E)

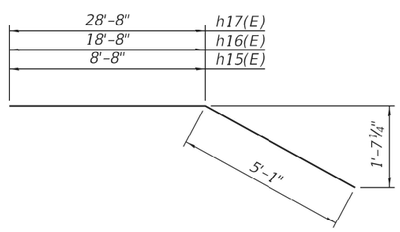

Bars h15(E), h16(E), h17(E)

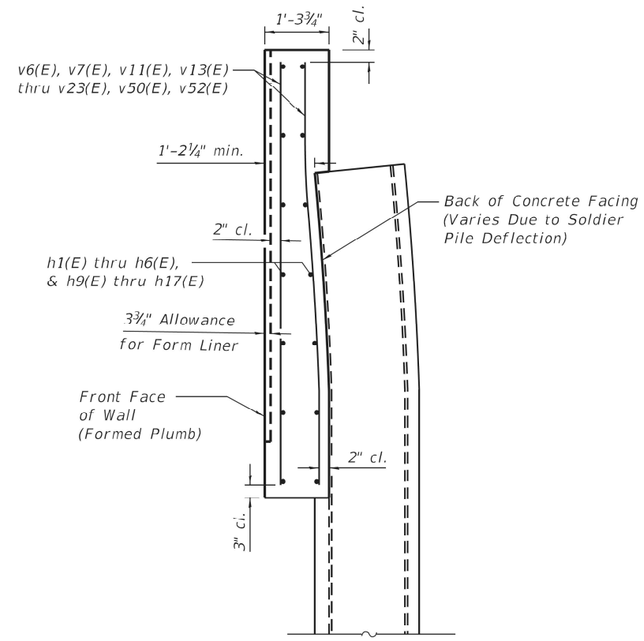

DEFLECTED PILE SECTION THRU FACING

BILL OF MATERIAL

Bar	No.	Size	Length	Shape
h1(E)	2	#5	19'-8"	
h2(E)	86	#5	29'-8"	
h3(E)	4	#5	13'-7"	
h4(E)	12	#5	23'-7"	
h5(E)	56	#5	33'-8"	
h6(E)	2	#5	9'-8"	
h9(E)	2	#5	24'-1"	
h10(E)	5	#5	29'-2"	
h11(E)	16	#5	16'-7"	
h12(E)	1	#5	13'-11"	
h13(E)	1	#5	23'-11"	
h14(E)	13	#5	33'-11"	
h15(E)	1	#5	13'-9"	
h16(E)	1	#5	23'-9"	
h17(E)	13	#5	33'-9"	
v6(E)	43	#5	11'-4"	
v7(E)	20	#5	10'-3"	
v11(E)	20	#5	6'-2"	
v13(E)	20	#5	9'-2"	
v14(E)	40	#5	11'-10"	
v15(E)	22	#5	12'-2"	
v16(E)	62	#5	12'-7"	
v17(E)	42	#5	12' 10"	
v18(E)	22	#5	10'-11"	
v19(E)	20	#5	10'-0"	
v20(E)	20	#5	9'-0"	
v21(E)	22	#5	8'-1"	
v22(E)	20	#5	7'-1"	
v23(E)	28	#5	5'-2"	
v50(E)	11	#5	14'-3"	
v52(E)	10	#5	8'-2"	
Concrete Structures			Cu. Yd.	108.1
Reinforcement Bars, Epoxy Coated			Pound	11,080

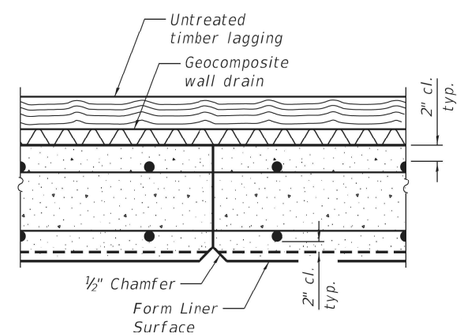

CONSTRUCTION JOINT

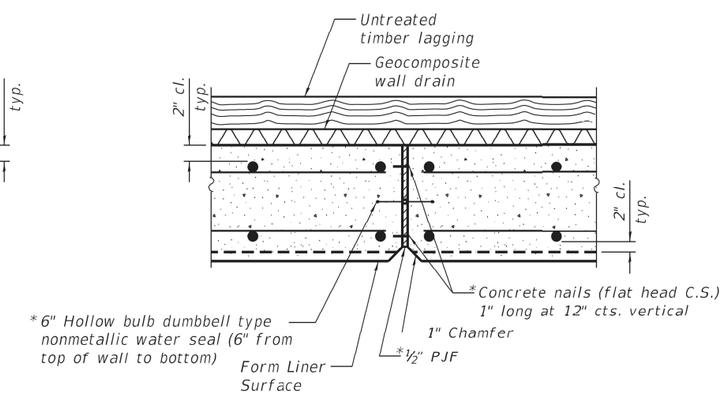

EXPANSION JOINT

* Cost included with Concrete Structures

Note:

Form liner to be Fitzgerald Formliners pattern #17007, Random Field Stone Graylastic, or SHPO approved equivalent. See Special Provision for Form Liner Textured Surface, Special.

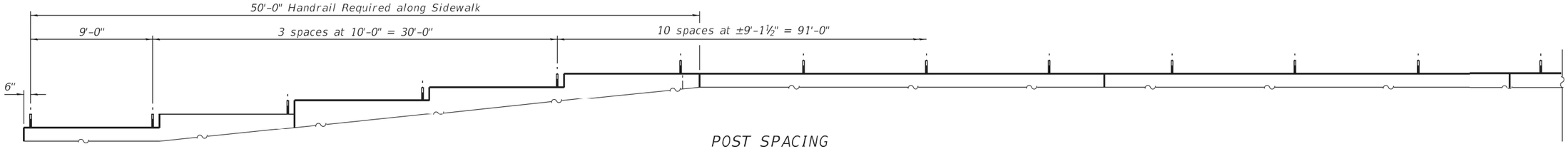

POST SPACING
Panels 1 thru 4

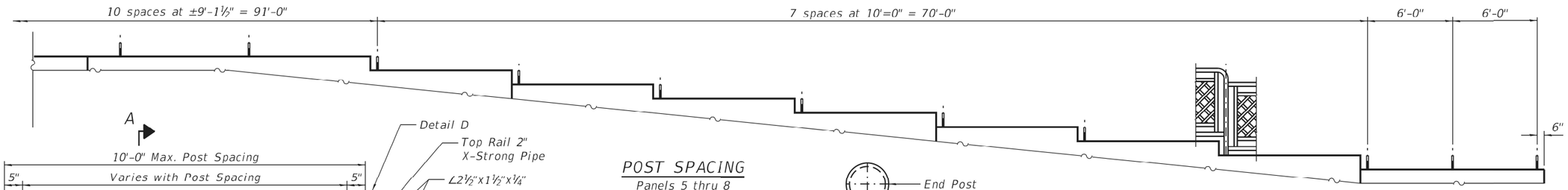

POST SPACING
Panels 5 thru 8

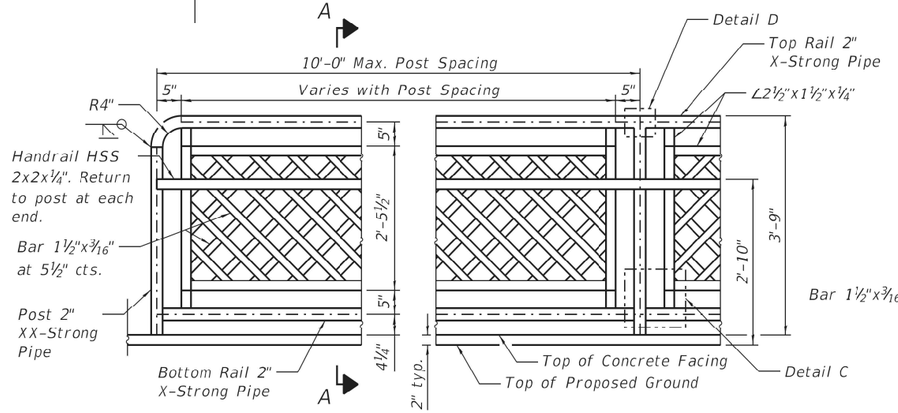

ELEVATION - PIPE HANDRAIL, SPECIAL

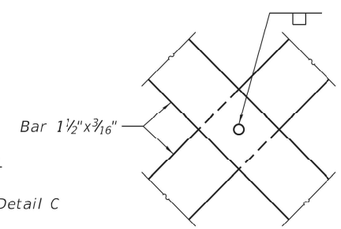

VIEW B-B

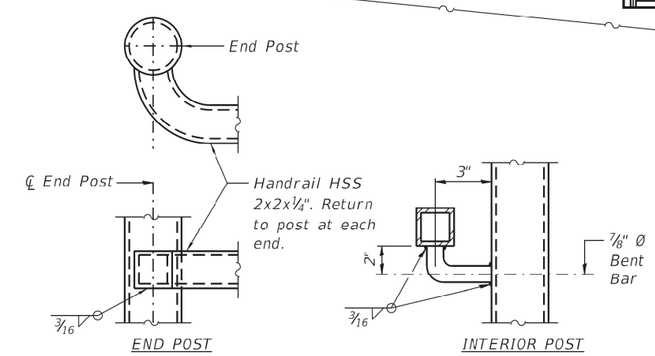

HANDRAIL DETAIL

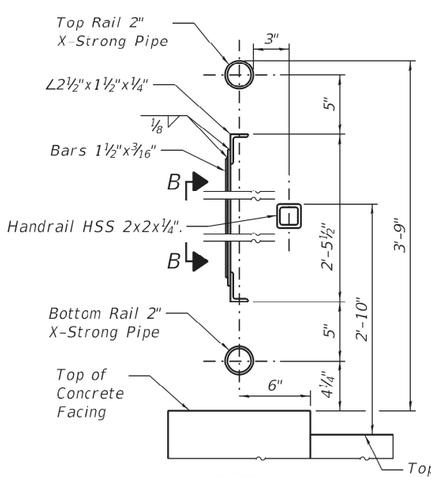

SECTION A-A

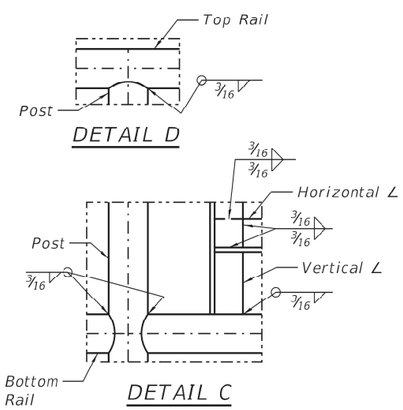

DETAIL D

DETAIL C

Core 3" ∅ Max. hole, 9" deep in top of concrete facing. Minimum core diameter shall allow adequate distribution of epoxy around embedded post in accordance with the epoxy manufacturer's specifications. Set post into cored hole and epoxy grout in place according to Article 584 of the Standard Specifications.

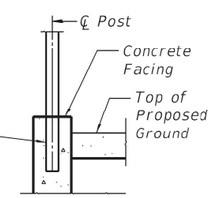

CONCRETE FACING ATTACHMENT

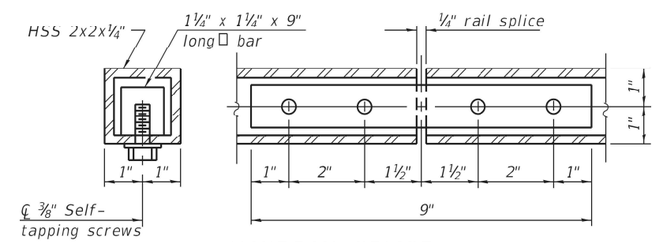

HANDRAIL SPLICE

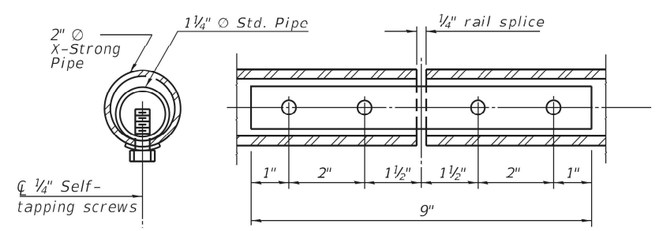

RAIL SPLICE

Notes:

Gripping surfaces shall be uninterrupted by posts, other construction elements, or obstructions.

Ends of handrail shall be rounded.

Handrail shall not rotate within their fittings.

Handrail shall conform to Section 509 of the Standard Specifications, with the exception that all pipe and connections shall be welded, galvanized or aluminum, according to Article 1006.30 or 1006.34.

All posts, railing, splices, anchor devices, and plates shall be painted black using the Inorganic Zinc Rich Primer / Acrylic / Acrylic System for shop and field painting of new structural steel.

Fasteners shall be mechanically galvanized in painted areas.

Post spacing shown may be adjusted at the discretion of the fabricator in order to provide an aesthetically pleasing and cost effective design. Spacing of posts shall not exceed 10'-0".

Posts and vertical bars shall be fabricated to be plumb when installed on the retaining wall. Angle the horizontal rails as necessary to follow the vertical profile of the top of retaining wall.

Costs of coring and epoxy grout for concrete facing attachment shall be included in the cost of Pipe Handrail, Special.

The Contractor shall be responsible for field verification of all horizontal and vertical retaining wall geometry and joints prior to fabrication of the handrail.

Handrail shall satisfy the loading requirements of Section 13.8.2 of the 2017 AASHTO LRFD Bridge Design Specifications, 8th Edition for Pedestrian Railing.

Member sizes shown are for estimating purposes only. The Contractor shall provide design calculations sealed by a Structural Engineer licensed in the State of Illinois with the actual member sizes used for fabrication.

Clear space between elements of the railing shall not allow the passage of a sphere greater than 4" in diameter.

This work shall consist of designing, furnishing, galvanizing, painting, and erecting handrails as listed above and according to these plans. This work shall be paid for at the contract unit price per FOOT for PIPE HANDRAIL, SPECIAL.

BILL OF MATERIAL

Item	Unit	Quantity
Pipe Handrail, Special	Foot	212.0

MODEL: Default
FILE NAME: E:\0191Struct\Wall A14. Final Design\Design Plans\CADD_Sheets\0437009-D264880-010-Hancrail.dgn

LIN ENGINEERING, LTD.
Consulting Engineers
Springfield, Illinois

USER NAME = LIN06-PC	DESIGNED - AML	REVISED -	
	CHECKED - VPT	REVISED -	
PLOT TIME = 12:49:39 PM	DRAWN - AML	REVISED -	
PLOT DATE = 10/14/2021	CHECKED - VPT	REVISED -	

STATE OF ILLINOIS
DEPARTMENT OF TRANSPORTATION

PIPE HANDRAIL, SPECIAL
S.N. 043-7009

SHEET 10 OF 13 SHEETS

F.A.P. RTE.	SECTION	COUNTY	TOTAL SHEETS	SHEET NO.
301	29R-1	JO DAVIESS	679	302
		CONTRACT NO. 64880		
	ILLINOIS	FED. AID PROJECT		

10/14/2021 12:49:39 PM

Illinois Department of Transportation
Division of Highways
Illinois Department of Transportation/D-2

SOIL BORING LOG

Page 1 of 1

Date 3/22/07

ROUTE FA 301 DESCRIPTION P92-088-92 Retaining Wall, IL 84 in Galena LOGGED BY J. Strating

SECTION 29X-T LOCATION W. Galena Twp. - 13 NW, SEC. , TWP. 28N, RNG. 1W

COUNTY JoDaviess DRILLING METHOD Hollow Stem Auger HAMMER TYPE CME-45 Automatic

STRUCT. NO.
Station

BORING NO. B-1
Station 1200+34
Offset 54.00ft Rt CL
Ground Surface Elev. 614.00 ft

Surface Water Elev. ft
Stream Bed Elev. ft

Groundwater Elev.:
First Encounter ft
Upon Completion ft
After Hrs. ft

Description	Elev.	DEPTH (ft)	BLOWS (/6")	UCS Qu (tsf)	MOIST (%)
MEDIUM brown SANDY LOAM					21.0
	611.50				
MEDIUM brown LOAM			2		
			3	0.8	36.0
	610.00		4	P	
		-5			
MEDIUM brown SILTY LOAM			2		
			3	0.5	27.0
	607.50		4	P	
End of Boring					
		-10			
		-15			
		-20			

The Unconfined Compressive Strength (UCS) Failure Mode is indicated by (B-Bulge, S-Shear, P-Penetrometer)
The SPT (N value) is the sum of the last two blow values in each sampling zone (AASHTO T206)

BBS, from 137 (Rev. 8-99)

Illinois Department of Transportation
Division of Highways
Illinois Department of Transportation/D-2

SOIL BORING LOG

Page 1 of 1

Date 3/22/07

ROUTE FA 301 DESCRIPTION P92-088-92 Retaining Wall, IL 84 in Galena LOGGED BY J. Strating

SECTION 29X-T LOCATION W. Galena Twp. - 13 NW, SEC. , TWP. 28N, RNG. 1W

COUNTY JoDaviess DRILLING METHOD Hollow Stem Auger HAMMER TYPE CME-45 Automatic

STRUCT. NO.
Station

BORING NO. B-2
Station 1201+00
Offset 70.00ft Rt CL
Ground Surface Elev. 616.60 ft

Surface Water Elev. ft
Stream Bed Elev. ft

Groundwater Elev.:
First Encounter ft
Upon Completion ft
After Hrs. ft

Description	Elev.	DEPTH (ft)	BLOWS (/6")	UCS Qu (tsf)	MOIST (%)
MEDIUM brown LOAM				0.8	13.0
				P	
	614.10				
VERY DENSE Concrete			3		
			100/5"		
	612.60				
		-5			
MEDIUM brown LOAM			6		
			4	0.5	14.0
	610.10		5	P	
LOOSE brown SANDY LOAM			3		
			3		
	607.00		3		
End of Boring					
		-10			
		-15			
		-20			

The Unconfined Compressive Strength (UCS) Failure Mode is indicated by (B-Bulge, S-Shear, P-Penetrometer)
The SPT (N value) is the sum of the last two blow values in each sampling zone (AASHTO T206)

BBS, from 137 (Rev. 8-99)

Illinois Department of Transportation
Division of Highways
IDOT

SOIL BORING LOG

Page 1 of 1

Date 7/22/15

ROUTE FA 301 DESCRIPTION P92-088-92 Retaining Wall, IL 84 in Galena LOGGED BY Wally Garza

SECTION 29X-T LOCATION , SEC. , TWP. , RNG. , PM

COUNTY JoDaviess DRILLING METHOD Hollow Stem Auger HAMMER TYPE CME-45 Automatic

STRUCT. NO.
Station

BORING NO. B-2 EXT
Station 1200+95
Offset 68.00ft Rt CL
Ground Surface Elev. 614.6 ft

Surface Water Elev. ft
Stream Bed Elev. ft

Groundwater Elev.:
First Encounter ft
Upon Completion ft
After Hrs. ft

Description	Elev.	DEPTH (ft)	BLOWS (/6")	UCS Qu (tsf)	MOIST (%)
Drilled down to 9'					
		-5			
	605.60				
VERY DENSE tan medium GRAVEL, verry little recovery, LIMESTONE			3		
		-10	3		
	604.10		100/3"		
VERY DENSE tan LIMESTONE			100/5"		
	601.60				
Auger Refusal @ 15'					
	599.60	-15			
Borehole continued with rock coring.					
		-20			

The Unconfined Compressive Strength (UCS) Failure Mode is indicated by (B-Bulge, S-Shear, P-Penetrometer)
The SPT (N value) is the sum of the last two blow values in each sampling zone (AASHTO T206)

BBS, from 137 (Rev. 8-99)

MODEL: Default
FILE NAME: E:\1018\Struct\Wall A14. Final Design\Design Plans\CADD_Sheets\0437009-D2648800-011-forlrgs 1.dgn

LIN ENGINEERING, LTD. Consulting Engineers Springfield, Illinois	USER NAME = LIN06-PC	DESIGNED - AML	REVISED -	STATE OF ILLINOIS DEPARTMENT OF TRANSPORTATION	BORING LOGS S.N. 043-7009
		CHECKED - VPT	REVISED -		
	PLOT TIME = 12:49:40 PM	DRAWN - AML	REVISED -		SHEET 11 OF 13 SHEETS
	PLOT DATE = 10/14/2021	CHECKED - VPT	REVISED -		

F.A.P. RTE.	SECTION	COUNTY	TOTAL SHEETS	SHEET NO.
301	29R-1	JO DAVIESS	679	303
		CONTRACT NO. 64880		
	ILLINOIS	FED. AID PROJECT		

10/14/2021 12:49:40 PM

Illinois Department of Transportation
Division of Highways
IDOT

ROCK CORE LOG

Page 1 of 1

Date 7/22/15

ROUTE FA 301 DESCRIPTION P92-088-92 Retaining Wall, IL 84 in Galena LOGGED BY Wally Garza

SECTION 29X-T LOCATION , SEC. , TWP. , RNG. , PM

COUNTY JoDaviess CORING METHOD

STRUCT. NO.
Station

BORING NO. B-2 EXT
Station 1200+95
Offset 68.00ft Rt CL
Ground Surface Elev. 614.6 ft

CORING BARREL TYPE & SIZE

Core Diameter 2 in
Top of Rock Elev. 604.10 ft
Begin Core Elev. 599.60 ft

		DEPTH (ft)	CORE (#)	RECOVERY (%)	R.Q.D. (%)	CORE TIME (min/ft)	STRENGTH (tsf)
Dolomite: tan-buff, marbled, aphanitic, thin to medium bedded. T.S.F.: 599.0 to 598.6	599.60		1	100	16	1.8	755
	594.60	-20					
Dolomite: as above, though less fractured. T.S.F.: 591.9 to 591.2 END of BORING @ 25'			2	90	68	1.6	567
	589.60	-25					
		-30					
		-35					

Color pictures of the cores
Cores will be stored for examination until
The "Strength" column represents the uniaxial compressive strength of the core sample (ASTM D-2938)

BBS, form 138 (Rev. 8-99)

Illinois Department of Transportation
Division of Highways
Illinois Department of Transportation/D-2

SOIL BORING LOG

Page 1 of 1

Date 3/22/07

ROUTE FA 301 DESCRIPTION P92-088-92 Retaining Wall, IL 84 in Galena LOGGED BY J. Strating

SECTION 29X-T LOCATION W. Galena Twp. - 13 NW, SEC. , TWP. 28N, RNG. 1W

COUNTY JoDaviess DRILLING METHOD Hollow Stem Auger HAMMER TYPE CME-45 Automatic

STRUCT. NO.
Station

BORING NO. B-3
Station 1201+74
Offset 75.00ft Rt CL
Ground Surface Elev. 624.20 ft

Surface Water Elev. ft
Stream Bed Elev. ft

Groundwater Elev.:
First Encounter ft
Upon Completion ft
After Hrs. ft

		DEPTH (ft)	BLOWS (/6")	UCS Qu (tsf)	MOIST (%)
MEDIUM dark brown SILTY CLAY LOAM				0.5 P	18.0
	621.70				
MEDIUM brown SILTY CLAY LOAM				0.5 P	21.0
	620.20				
		-5			
MEDIUM brown SILTY CLAY LOAM				0.6 P	17.0
	617.70				
MEDIUM brown SILTY CLAY LOAM				0.6 P	17.0
	615.20				
		-10			
MEDIUM brown SILTY CLAY LOAM				0.9 P	17.0
	612.70				
End of Boring					
		-15			
		-20			

The Unconfined Compressive Strength (UCS) Failure Mode is indicated by (B-Bulge, S-Shear, P-Penetrometer)
The SPT (N value) is the sum of the last two blow values in each sampling zone (AASHTO T206)

BBS, from 137 (Rev. 8-99)

Illinois Department of Transportation
Division of Highways
Illinois Department of Transportation/D-2

SOIL BORING LOG

Page 1 of 1

Date 3/22/07

ROUTE FA 301 DESCRIPTION P92-088-92 Retaining Wall, IL 84 in Galena LOGGED BY J. Strating

SECTION 29X-T LOCATION W. Galena Twp. - 13 NW, SEC. , TWP. 28N, RNG. 1W

COUNTY JoDaviess DRILLING METHOD Hollow Stem Auger HAMMER TYPE CME-45 Automatic

STRUCT. NO.
Station

BORING NO. B-4
Station 1201+75
Offset 58.50ft Rt CL
Ground Surface Elev. 613.80 ft

Surface Water Elev. ft
Stream Bed Elev. ft

Groundwater Elev.:
First Encounter ft
Upon Completion ft
After Hrs. ft

		DEPTH (ft)	BLOWS (/6")	UCS Qu (tsf)	MOIST (%)
MEDIUM brown LOAM				0.5 P	12.0
	611.30				
MEDIUM tan/brown SILTY CLAY LOAM with weathered LIMESTONE fragments			7 8 5	0.6 P	17.0
	609.80				
		-5			
MEDIUM brown SILTY CLAY LOAM with weathered LIMESTONE fragments			5 4 6	0.8 P	28.0
	607.30				
STIFF tan/gray SILTY CLAY			2 3 4	1.3 P	28.0
	604.80				
		-10			
MEDIUM gray SILTY LOAM			2 3 3	1.0 P	28.0
	602.30				
MEDIUM tan/brown SILTY LOAM			2 3 3	0.5 P	32.0
	599.80				
End of Boring					
		-15			
		-20			

The Unconfined Compressive Strength (UCS) Failure Mode is indicated by (B-Bulge, S-Shear, P-Penetrometer)
The SPT (N value) is the sum of the last two blow values in each sampling zone (AASHTO T206)

BBS, from 137 (Rev. 8-99)

MODEL: Default
FILE NAME: E:\1018\Struct\Wall A14. Final Design\Design Plans\CADD_Sheets\0437009-D264880-012-Borlrgs 2.dgn

LIN ENGINEERING, LTD. Consulting Engineers Springfield, Illinois	USER NAME = LIN06-PC	DESIGNED - AML	REVISED -	STATE OF ILLINOIS DEPARTMENT OF TRANSPORTATION
		CHECKED - VPT	REVISED -	
	PLOT TIME = 12:49:43 PM	DRAWN - AML	REVISED -	
	PLOT DATE = 10/14/2021	CHECKED - VPT	REVISED -	

BORING LOGS
S.N. 043-7009
SHEET 12 OF 13 SHEETS

F.A.P. RTE.	SECTION	COUNTY	TOTAL SHEETS	SHEET NO.
301	29R-1	JO DAVIESS	679	304
		CONTRACT NO. 64880		
		ILLINOIS FED. AID PROJECT		

10/14/2021 12:49:43 PM

Illinois Department of Transportation
Division of Highways
Illinois Department of Transportation/D-2

SOIL BORING LOG

Page 1 of 1

Date 3/23/07

ROUTE FA 301 DESCRIPTION P92-088-02 Retaining Wall, IL 84 in Galena LOGGED BY J. Stralingi

SECTION 29X-T LOCATION W. Galena Twp. - 13 NW, SEC. , TWP. 28N, RNG. 1W

COUNTY JoDaviess DRILLING METHOD Hollow Stem Auger HAMMER TYPE CME-45 Automatic

STRUCT. NO.
Station

BORING NO. B-5
Station 1202+43
Offset 44.00ft Rt CL
Ground Surface Elev. 615.60 ft

Surface Water Elev. ft
Stream Bed Elev. ft

Groundwater Elev.:
First Encounter ft
Upon Completion ft
After Hrs. ft

Description	Elev.	DEPTH (ft)	BLOWS (/6")	UCS Cu (tsf)	MOIST (%)
MEDIUM brown SILTY CLAY LOAM	613.10			0.5 P	19.0
STIFF tan/brown SILTY CLAY LOAM	611.60		7 3 4	1.5 P	28.0
STIFF tan/gray SILTY CLAY	609.10	-5	3 4 5	1.0 P	33.0
End of Boring		-10 -15 -20			

The Unconfined Compressive Strength (UCS) Failure Mode is indicated by (B-Bulge, S-Shear, P-Penetrometer)
The SPT (N value) is the sum of the last two blow values in each sampling zone (AASHTO T206)

BBS, from 137 (Rev. 8-99)

Illinois Department of Transportation

Soil Survey Data

Project:
Route: US 20
Section: 29R-1
County Jo Daviess

Logged By: Wally Garza

Date: 7/29/15 Sta.: 1200+40 Elev. 613.8 Offset: 68' Rt

Depth	Sample No.	Soil Type	Water	Can No.	Qu	Description of Soil Layer (Color, Moisture, Strength, Etc.)
1						
2						1st Encounter – 607.8
3						
4						Auger Refusal @ 607.8
5						
6						
7						
8						
9						
10						

Date: 7/30/15 B-3 Sta.: 1201+72 Elev. 624.5 Offset: 77.5' Rt

Depth	Sample No.	Soil Type	Water	Can No.	Qu	Description of Soil Layer (Color, Moisture, Strength, Etc.)
1						
2						1st Encounter @ 609.5
3						
4						Auger Refusal @ 603.5
5						
6						
7						
8						
9						
10						

Date: 7/30/15 B-4 Sta.: 1201+72 Offset: 55' Rt

Depth	Sample No.	Soil Type	Water	Can No.	Qu	Description of Soil Layer (Color, Moisture, Strength, Etc.)
1						
2						1st Encounter @ 612.5
3						
4						Auger Refusal @ 612.5
5						
6						
7						
8						
9						
10						

Qu: 0-.25 Very Soft; .25-.5 Soft; .5-1.0 Medium; 1.0-2.0 Stiff; 2.0-4.0 Very Stiff; >4.0 Hard jt9-1-15-1

Page 1

Illinois Department of Transportation

Soil Survey Data

Project:
Route: US 20
Section: 29R-1
County Jo Daviess

Logged By: Wally Garza

Date: 7/30/15 Sta.: 1202+53 (@1202+50)Elev. 618.1 Offset: 57' Rt

Depth	Sample No.	Soil Type	Water	Can No.	Qu	Description of Soil Layer (Color, Moisture, Strength, Etc.)
1						
2						1st Encounter – 617.1
3						
4						Auger Refusal @ 617.1
5						
6						
7						
8						
9						
10						

Date: 7/30/15 Sta.: 1217+17 (@1217+05) Elev. 660.9 Offset: 35' Lt of CL

Depth	Sample No.	Soil Type	Water	Can No.	Qu	Description of Soil Layer (Color, Moisture, Strength, Etc.)
1						
2						
3						1st Encounter @ 658.4
4						
5						Auger Refusal @ 649.9
6						
7						
8						
9						
10						

Date: 7/29/15 Sta.: 1217+63 (@ 1217+67) Elev. 669.9 Offset: 41' Lt of CL

Depth	Sample No.	Soil Type	Water	Can No.	Qu	Description of Soil Layer (Color, Moisture, Strength, Etc.)
1						
2						
3						1st Encounter @ 668.9
4						
5						Auger Refusal @ 665.4
6						
7						
8						
9						
10						

Qu: 0-.25 Very Soft; .25-.5 Soft; .5-1.0 Medium; 1.0-2.0 Stiff; 2.0-4.0 Very Stiff; >4.0 Hard jt9-1-15-1

Page 2

MODEL: Default
FILE NAME: E:\1018\Struct\Wall A14. Final Design\Design Plans\CADD_Sheets\0437009-D264880-013-Borlrgs 3.dgn

LIN ENGINEERING, LTD. Consulting Engineers Springfield, Illinois	USER NAME = LIN06-PC	DESIGNED - AML	REVISED -	STATE OF ILLINOIS DEPARTMENT OF TRANSPORTATION	BORING LOGS S.N. 043-7009
		CHECKED - VPT	REVISED -		
	PLOT TIME = 12:49:45 PM	DRAWN - AML	REVISED -		
	PLOT DATE = 10/14/2021	CHECKED - VPT	REVISED -		SHEET 13 OF 13 SHEETS

F.A.P. RTE.	SECTION	COUNTY	TOTAL SHEETS	SHEET NO.
301	29R-1	JO DAVIESS	679	305
		CONTRACT NO. 64880		
	ILLINOIS	FED. AID PROJECT		

10/14/2021 12:49:45 PM

Benchmark: Handrail at Sta. 1195+33.06, 73.35' Rt. of existing ℄ IL 84/U.S. Rte. 20, Elev. 615.35.

Existing Structure: Existing retaining wall was constructed at an unknown date and is of historical significance. Existing retaining wall is 146'-4" in total length measured along the front face of the wall. It is composed of historic stone blocks. 38'-0" of the existing wall is to be carefully deconstructed and salvaged and will become the property of the City of Galena. Contractor shall deliver salvaged stone to the City, at a time and location to be coordinated with the City Engineer, Andy Lewis, available at (815) 777-1050 or alewis@cityofgalena.org.

Northbound traffic will be maintained on IL 84/U.S. Rte. 20 using stage construction. Southbound traffic will be detoured along Gear St.

Notes:
The Limestone Block Wall at this location shall be constructed of Newly Acquired Stone in accordance with the Special Provision for Retaining Wall, Special.
Construction vibration monitoring shall be performed in accordance with the contract Special Provisions.

LEGEND

- Boring
- Ex. Lightpole
- Ex. Manhole
- Ex. Power Pole
- Ex. Sanitary Sewer
- Ex. Sign
- Ex. Storm Sewer
- Pr. Inlet
- Pr. Storm Sewer
- Drainage Tile
- Rock Depth Probe
- Pr. Handrail

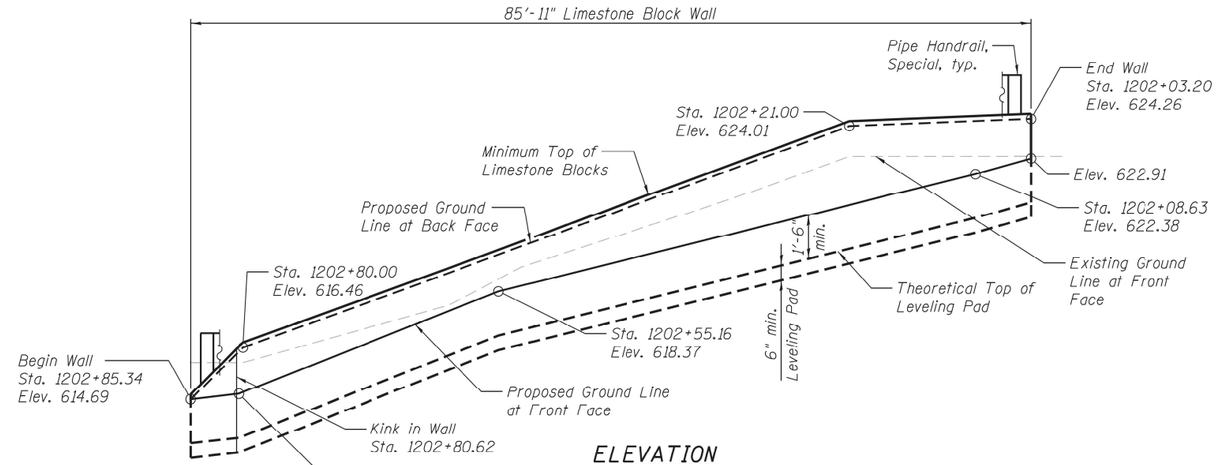

ELEVATION

(Unfolded along Front Face of Wall)

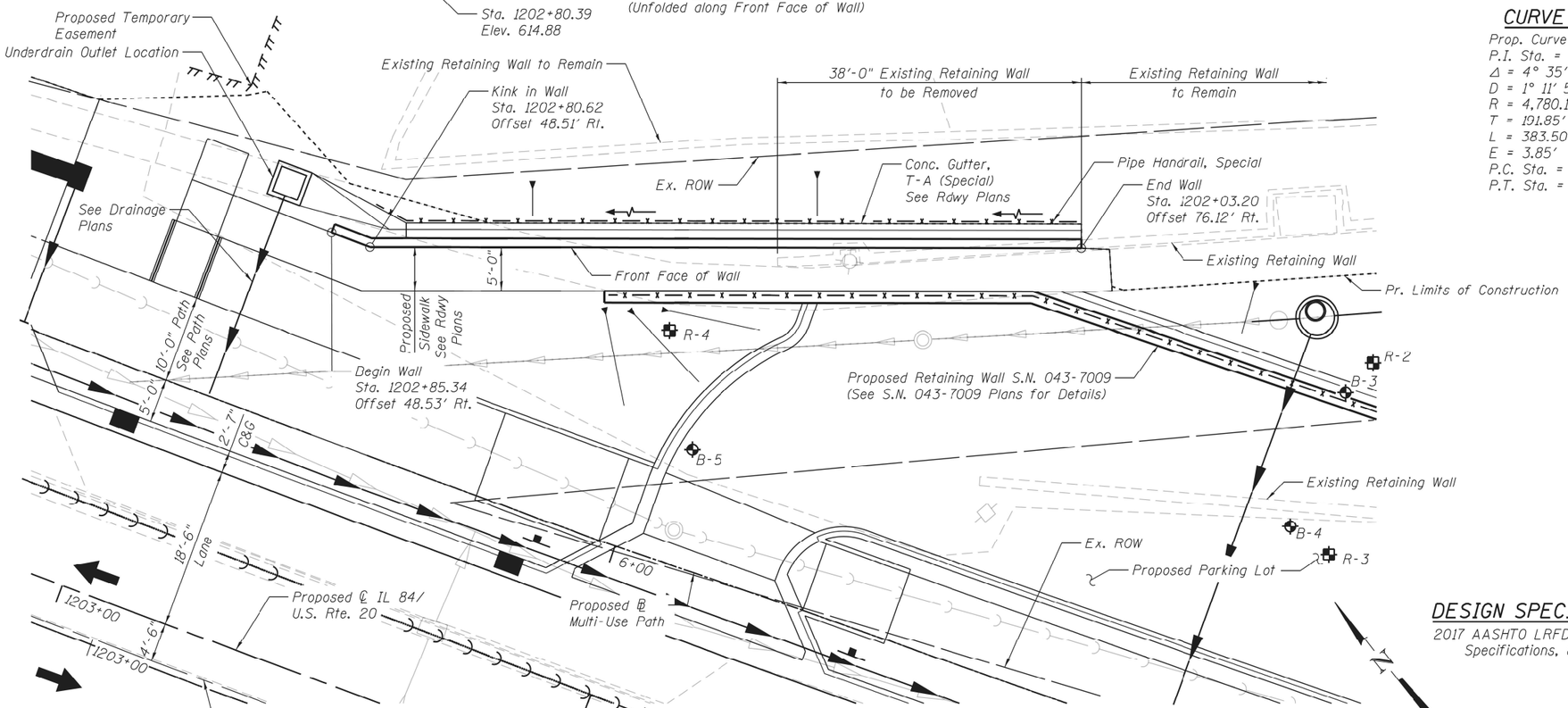

PLAN

Stations and offsets are measured from Proposed ℄ IL 84/U.S. Rte. 20 to Proposed Ground Line at Front Face of Wall.

CURVE DATA

Prop. Curve 71230
P.I. Sta. = 1201+85.80
Δ = 4° 35' 48" (RT)
D = 1° 11' 55"
R = 4,780.12'
T = 191.85'
L = 383.50'
E = 3.85'
P.C. Sta. = 1199+93.95
P.T. Sta. = 1203+77.45

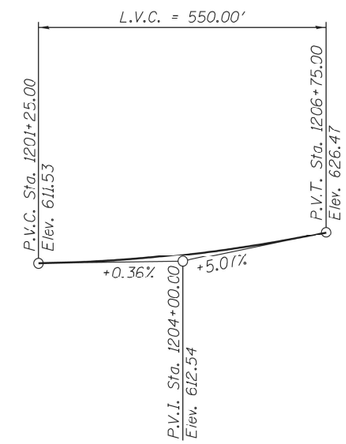

PROFILE GRADE

(Along Proposed ℄ IL 84/U.S. Rte. 20)

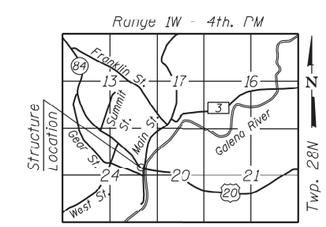

LOCATION SKETCH

DESIGN SPECIFICATIONS

2017 AASHTO LRFD Bridge Design Specifications, 8th Edition

GENERAL PLAN & ELEVATION
IL 84/U.S. ROUTE 20
F.A.P. RTE. 301 - SEC. 29R-1
JO DAVIESS COUNTY
STATION 1202+03.20 TO 1202+85.34
WALL B

LIN ENGINEERING, LTD.
Consulting Engineers
Springfield, Illinois

USER NAME = LIN06-PC	DESIGNED - AML	REVISED -	
	CHECKED - VPT	REVISED -	
PLOT TIME = 12:49:54 PM	DRAWN - AML	REVISED -	
PLOT DATE = 10/14/2021	CHECKED - VPT	REVISED -	

STATE OF ILLINOIS
DEPARTMENT OF TRANSPORTATION

GENERAL PLAN AND ELEVATION
WALL B

SHEET 1 OF 2 SHEETS

F.A.P. RTE.	SECTION	COUNTY	TOTAL SHEETS	SHEET NO.
301	29R-1	JO DAVIESS	679	306
		CONTRACT NO. 64880		
		ILLINOIS FED. AID PROJECT		

MODEL: Wall_B-D264880-001
FILE NAME: E:\0183\Struct\Wall B13. Final Plans\CADD_Sheets\Wall_B-D264880.dgn
10/14/2021 12:49:54 PM

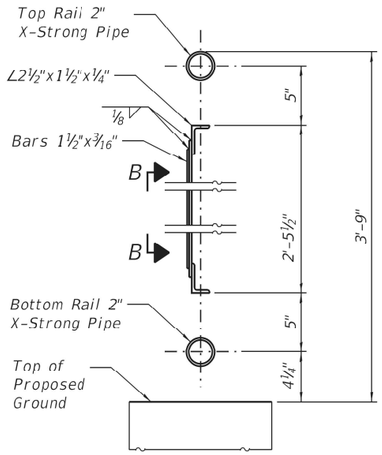

SECTION A-A

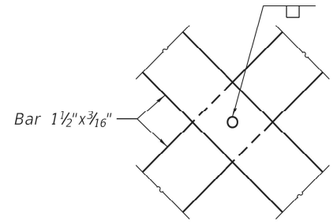

VIEW B-B

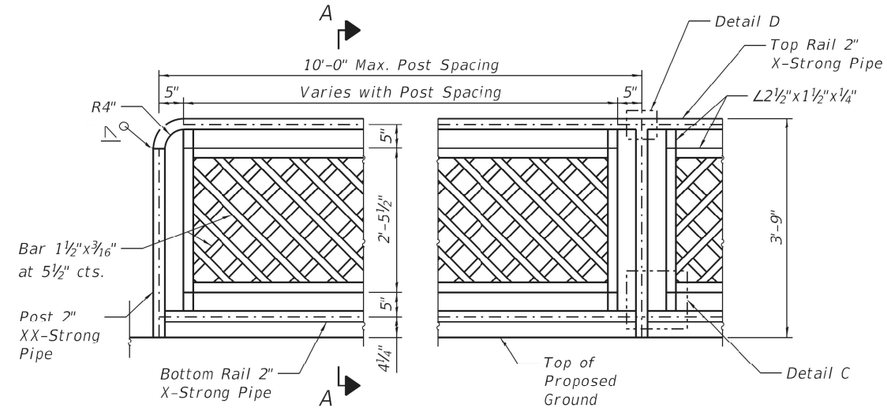

ELEVATION - PIPE HANDRAIL, SPECIAL

TOTAL BILL OF MATERIAL

Item	Unit	Total
Geocomposite Wall Drain	Sq.Yd.	24
Retaining Wall Removal	Foot	38
Pipe Handrail, Special	Foot	81.0
Retaining Wall, Special	Sq.Ft.	292
Pipe Underdrains for Structures 4"	Foot	87

PIPE HANDRAIL, SPECIAL LOCATION

Point	Station	Offset
Begin	1202+81.65	53.29' Rt.
Kink	1202+77.71	52.78' Rt.
End	1202+04.21	78.95' Rt.

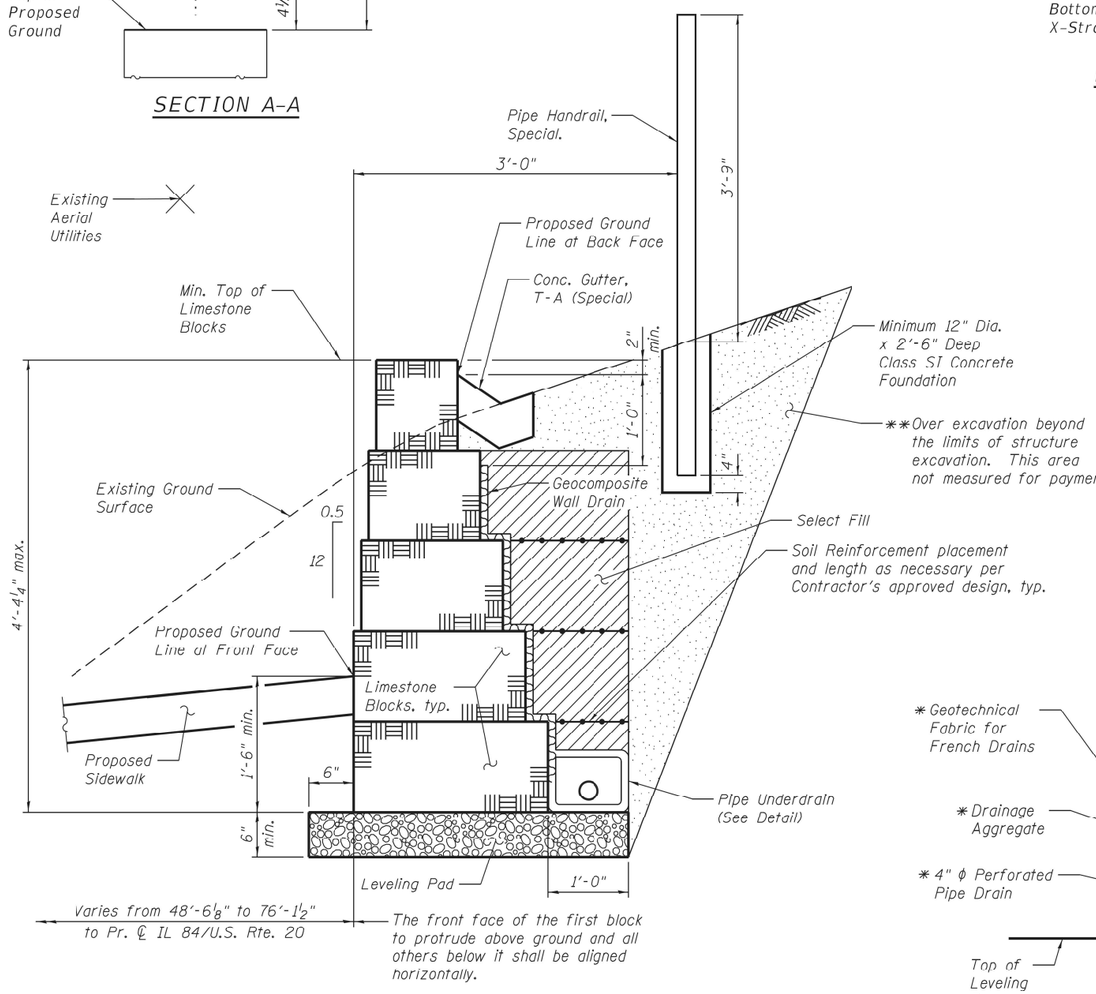

TYPICAL WALL SECTION

** Backfill remainder of structure excavation and over excavation with same material specified for select fill.

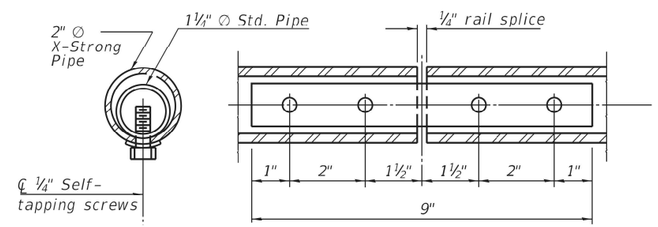

RAIL SPLICE

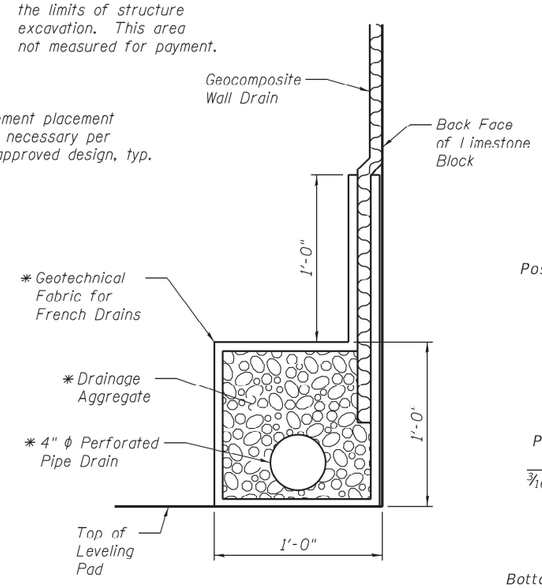

PIPE UNDERDRAIN DETAIL

* Included in the cost of Pipe Underdrains for Structures 4".

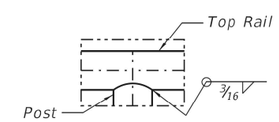

DETAIL D

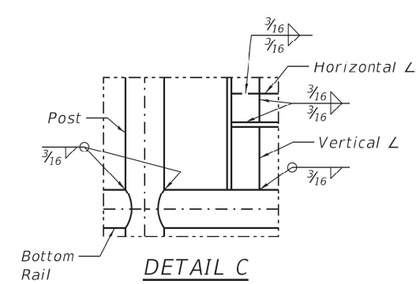

DETAIL C

Notes:

Gripping surfaces shall be uninterrupted by posts, other construction elements, or obstructions.

Ends of handrail shall be rounded.

Handrail shall not rotate within their fittings.

Handrail shall conform to Section 509 of the Standard Specifications, with the exception that all pipe and connections shall be welded, galvanized or aluminum, according to Article 1006.30 or 1006.34.

All posts, railing, splices, anchor devices, and plates shall be painted black using the Inorganic Zinc Rich Primer / Acrylic / Acrylic System for shop and field painting of new structural steel.

Fasteners shall be mechanically galvanized in painted areas.

Post spacing between the points shown in the table is at the discretion of the fabricator, in order to provide an aesthetically pleasing and cost effective design. Spacing of posts shall not exceed 10'-0".

Posts and vertical bars shall be fabricated to be plumb when installed on the retaining wall. Angle the horizontal rails as necessary to follow the vertical profile of the top of retaining wall.

Posts shall be placed in Class SI Conrete Foundation as shown in the Typical Wall Section. Concrete Foundation shall be included in the cost of Pipe Handrail, Special.

The Contractor shall be responsible for field verification of all horizontal and vertical geometry prior to fabrication of the handrail.

Handrail shall satisfy the loading requirements of Section 13.8.2 of the 2017 AASHTO LRFD Bridge Design Specifications, 8th Edition for Pedestrian Railing.

Member sizes shown are for estimating purposes only. The Contractor shall provide design calculations sealed by a Structural Engineer licensed in the State of Illinois with the actual member sizes used for fabrication.

Clear space between elements of the railing shall not allow the passage of a sphere greater than 4" in diameter.

This work shall consist of designing, furnishing, galvanizing, painting, and erecting handrails as listed above and according to these plans. This work shall be paid for at the contract unit price per FOOT for PIPE HANDRAIL, SPECIAL.

MODEL: Wall_B-D2640880-002
FILE NAME: E:\0139\Struct\Wall B\3. Final Plans\CADD_Sheets\Wall_B-D2640880.dgn

LIN ENGINEERING, LTD.
Consulting Engineers
Springfield, Illinois

USER NAME = LIN06-PC	DESIGNED - AML	REVISED -	
	CHECKED - VPT	REVISED -	
PLOT TIME = 12:49:55 PM	DRAWN - AML	REVISED -	
PLOT DATE = 10/14/2021	CHECKED - VPT	REVISED -	

STATE OF ILLINOIS
DEPARTMENT OF TRANSPORTATION

DETAILS
WALL B

SHEET 2 OF 2 SHEETS

F.A.P. RTE.	SECTION	COUNTY	TOTAL SHEETS	SHEET NO.
301	29R-1	JO DAVIESS	679	307
		CONTRACT NO. 64880		
	ILLINOIS	FED. AID PROJECT		

10/14/2021 12:49:55 PM

Benchmark: Handrail at Sta. 1195+33.06, 73.35′ Rt. of existing ℄ IL 84/U.S. Rte. 20, Elev. 615.35.

Existing Structure: Existing retaining wall was constructed at an unknown date and is of historical significance. Existing retaining wall is 129′-3" in total length measured along the front face of the wall. It is composed of historic stone blocks. The entire length of the existing wall is to be carefully deconstructed and salvaged and will become the property of the City of Galena. Contractor shall deliver salvaged stone to the City, at a time and location to be coordinated with the City Engineer, Andy Lewis, available at (815) 777-1050 or alewis@cityofgalena.org. Railroad ties located approximately 1 foot north of the existing retaining wall shall also be removed.

Northbound traffic will be maintained on IL 84/U.S. Rte. 20 using stage construction. Southbound traffic will be detoured along Gear St.

Notes:

The Limestone Block Wall at this location shall be constructed of Newly Acquired Stone in accordance with the Special Provision for Retaining Wall, Special.

Construction vibration monitoring shall be performed in accordance with the contract Special Provisions.

Soil boring logs for borings B-1c and B-2c are available within the Roadway plans.

Existing wooden steps near south end of existing wall are to remain. The existing wooden steps shall be repaired or replaced at no additional cost to the Department if disturbed by the Contractor.

LEGEND

- Boring
- Ex. Lightpole
- Ex. Manhole
- Ex. Sanitary Sewer
- Ex. Water Valve Box
- Ex. Water Line
- Pr. Manhole
- Pr. Inlet
- Pr. Sanitary Sewer
- Pr. Storm Sewer
- Pr. Water Valve Box
- Pr. Water Line
- Pr. Handrail

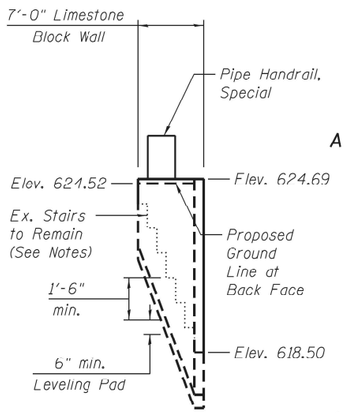

VIEW A-A

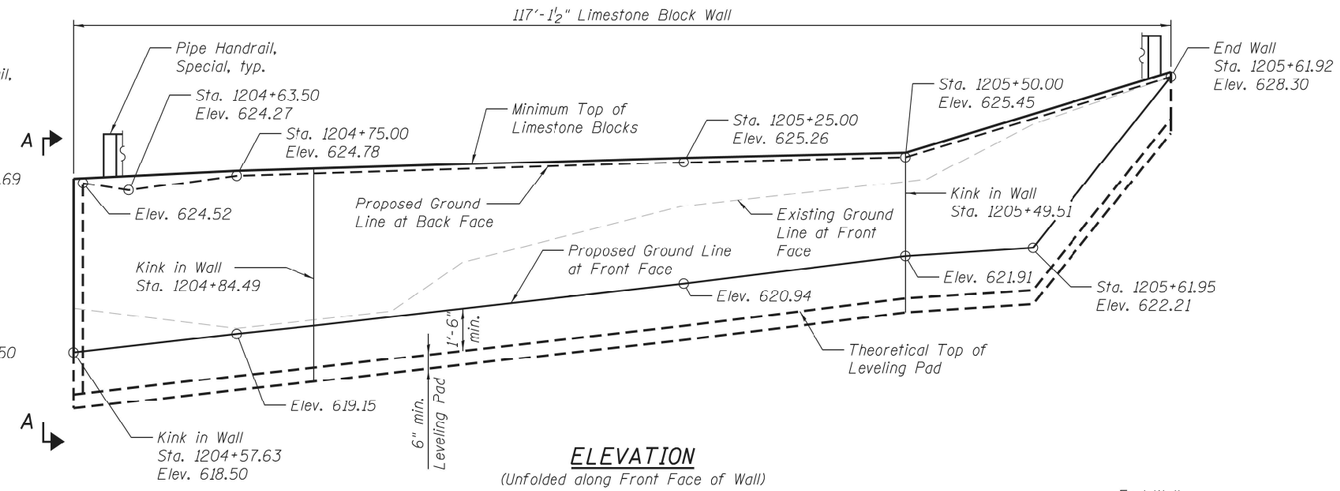

ELEVATION

(Unfolded along Front Face of Wall)

CURVE DATA

Prop. Curve 71240
P.I. Sta. = 1205+66.28
Δ = 16° 54′ 56" (LT)
D = 10° 25′ 03"
R = 550.00′
T = 81.78′
L = 162.38′
E = 6.05′
P.C. Sta. = 1204+84.49
P.T. Sta. = 1206+46.87

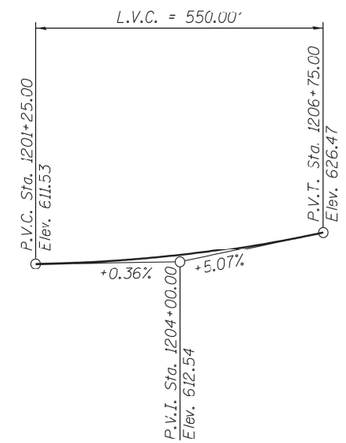

PROFILE GRADE

(Along Proposed ℄ IL 84/U.S. Rte. 20)

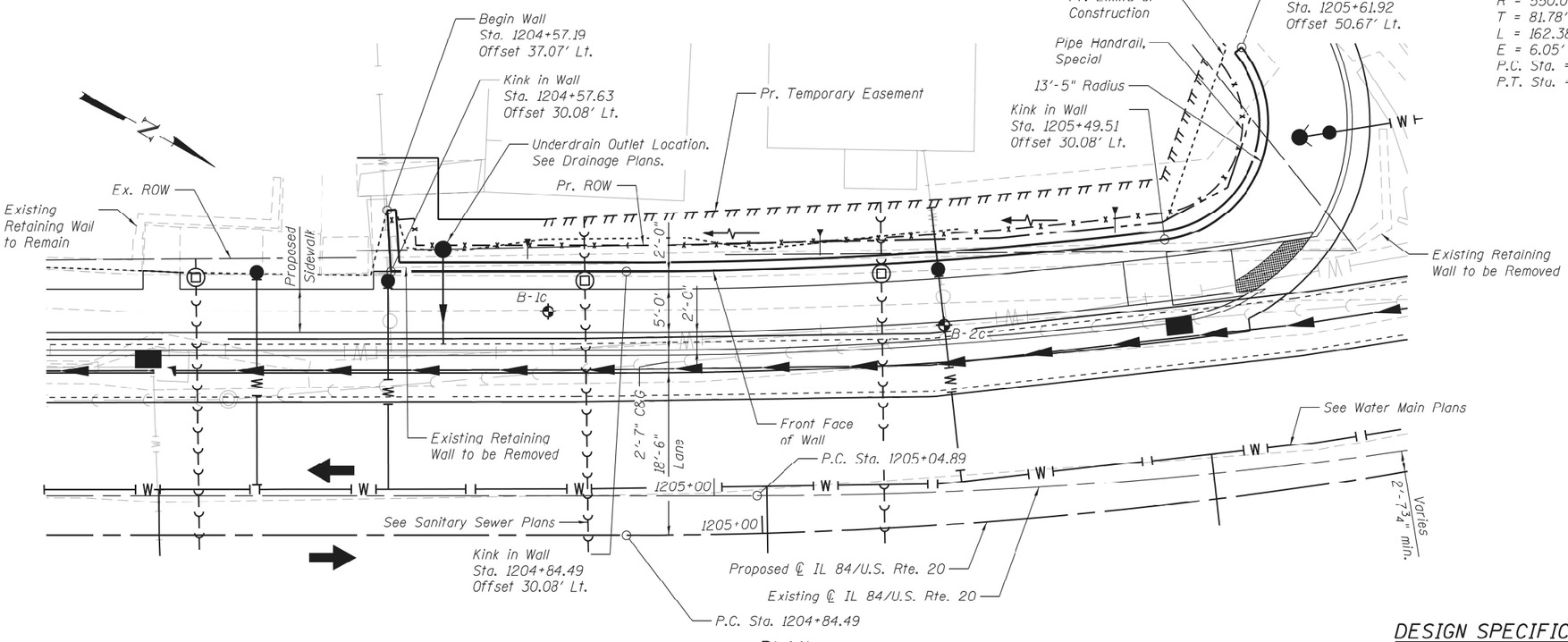

PLAN

Stations and offsets are measured from Proposed ℄ IL 84/U.S. Rte. 20 to Proposed Ground Line at Front Face of Wall.

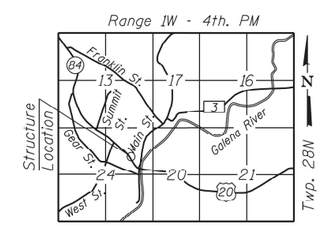

LOCATION SKETCH

DESIGN SPECIFICATIONS

2017 AASHTO LRFD Bridge Design Specifications, 8th Edition

GENERAL PLAN & ELEVATION
IL 84/U.S. ROUTE 20
F.A.P. RTE. 301 - SEC. 29R-1
JO DAVIESS COUNTY
STATION 1204+57.19 TO 1205+61.92
WALL C

MODEL: Wall_C-D264880-001
FILE NAME: E:\1019Struct\Wall C\3. Final Plans\CADD_Sheets\Wall_C-026-880.dgn

LIN ENGINEERING, LTD.
Consulting Engineers
Springfield, Illinois

USER NAME = LIN06-PC	DESIGNED - AML	REVISED -	
	CHECKED - VPT	REVISED -	
PLOT TIME = 12:49:56 PM	DRAWN - AML	REVISED -	
PLOT DATE = 10/14/2021	CHECKED - VPT	REVISED -	

STATE OF ILLINOIS
DEPARTMENT OF TRANSPORTATION

GENERAL PLAN AND ELEVATION
WALL C

SHEET 1 OF 2 SHEETS

F.A.P. RTE.	SECTION	COUNTY	TOTAL SHEETS	SHEET NO.
301	29R-1	JO DAVIESS	679	308
		CONTRACT NO. 64880		
		ILLINOIS FED. AID PROJECT		

10/14/2021 12:49:56 PM

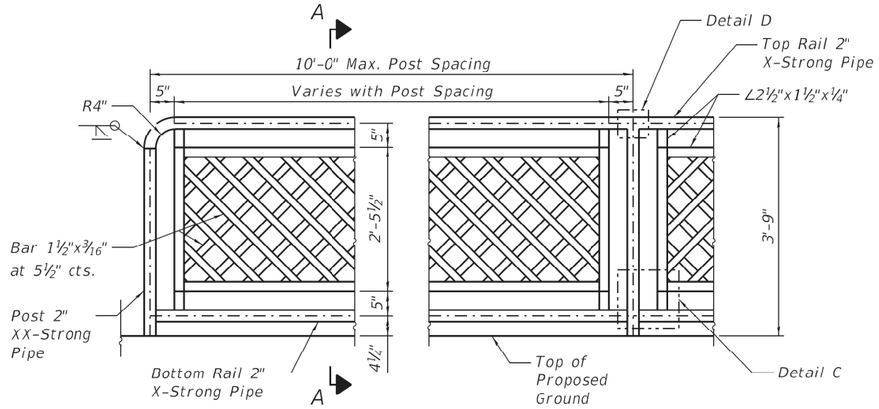

ELEVATION - PIPE HANDRAIL, SPECIAL

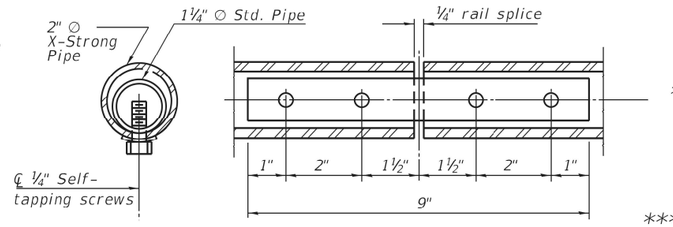

RAIL SPLICE

PIPE HANDRAIL, SPECIAL LOCATION

	Point	Station	Offset
***	Begin	1204+57.27	35.89' Lt.
	Kink	1204+60.26	36.08' Lt.
	Kink	1204+60.45	33.08' Lt.
	Kink	1204+84.49	33.08' Lt.
	Kink	1205+49.51	33.08' Lt.
	End	1205+59.40	48.65' Lt.

*** Station and offset shown are at the anticipated intersection of the pipe handrail with the front face of the wall along the stairs. The actual end point of the handrail shall be adjusted at the discretion of the fabricator in order to provide an aesthetically pleasing end condition, while also minimizing the horizontal clear space between the end of the rail and any adjacent surfaces, appurtenances, or barriers.

TOTAL BILL OF MATERIAL

Item	Unit	Total
Geocomposite Wall Drain	Sq.Yd.	70
Retaining Wall Removal	Foot	130
Pipe Handrail, Special	Foot	113.0
Retaining Wall, Special	Sq.Ft.	755
Pipe Underdrains for Structures 4"	Foot	125

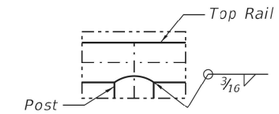

DETAIL D

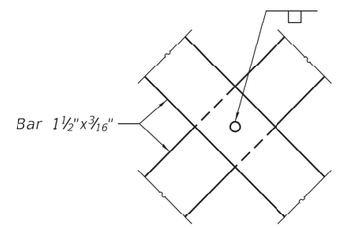

VIEW B-B

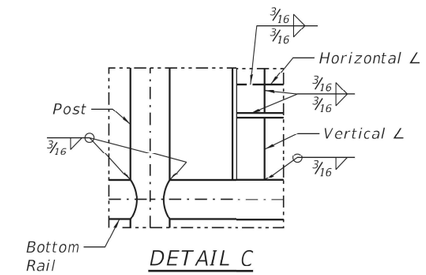

DETAIL C

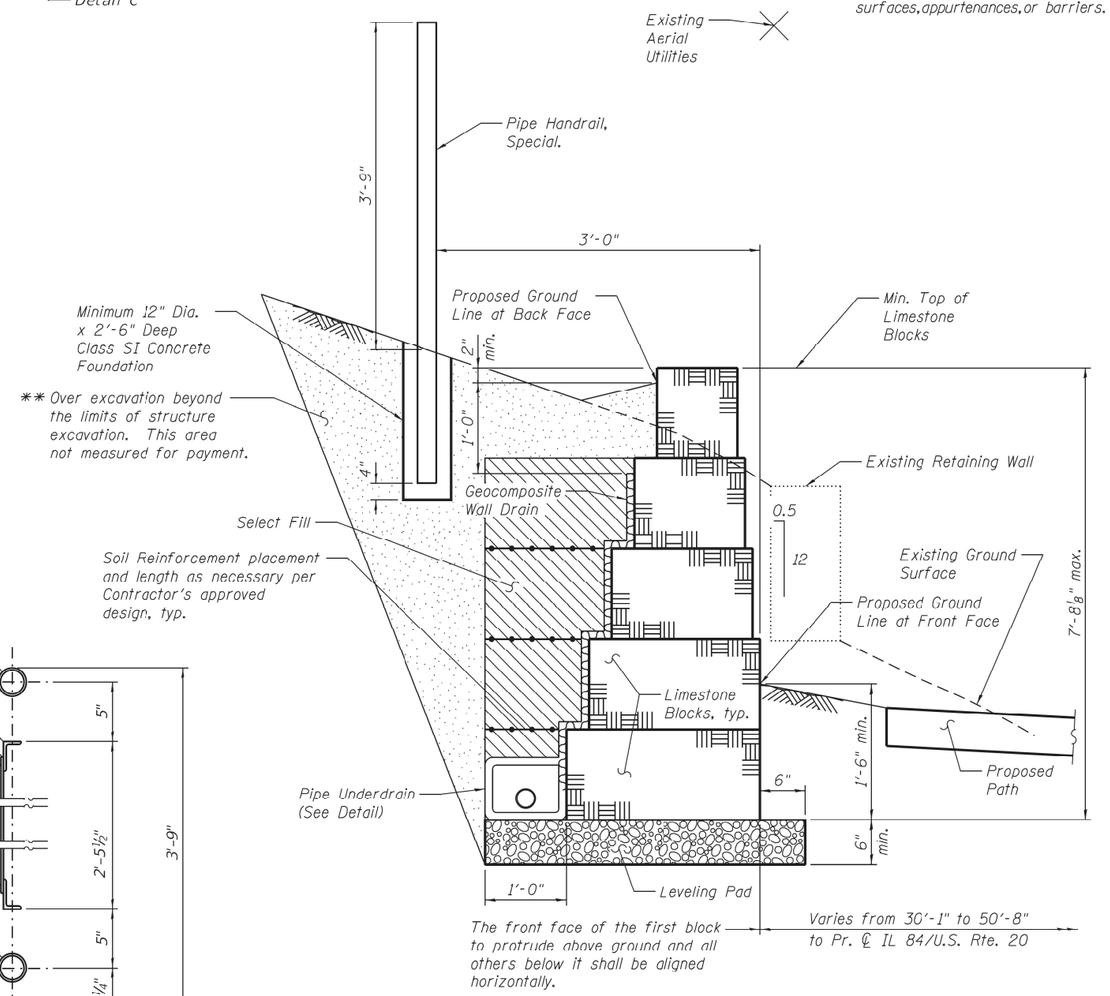

TYPICAL WALL SECTION

** Backfill remainder of structure excavation and over excavation with same material specified for select fill.

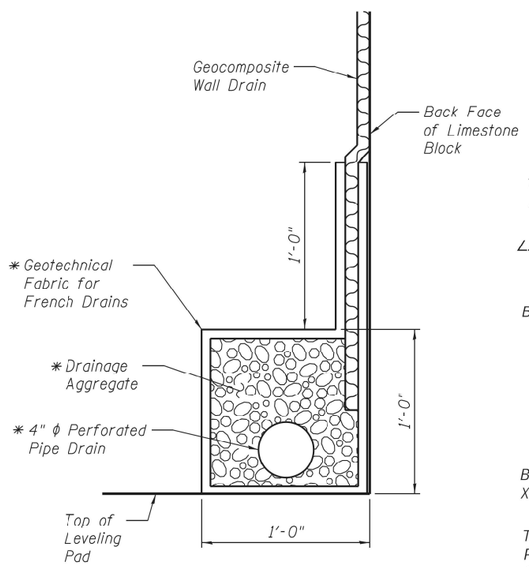

PIPE UNDERDRAIN DETAIL

* Included in the cost of Pipe Underdrains for Structures 4".

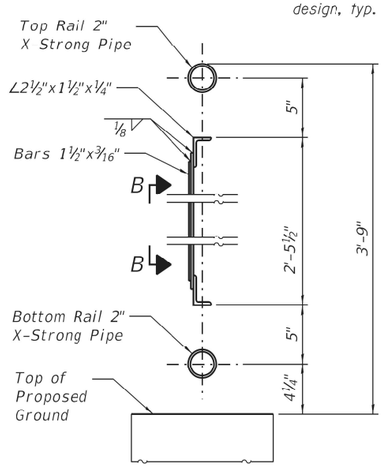

SECTION A-A

Notes:

Gripping surfaces shall be uninterrupted by posts, other construction elements, or obstructions.

Ends of handrail shall be rounded.

Handrail shall not rotate within their fittings.

Handrail shall conform to Section 509 of the Standard Specifications, with the exception that all pipe and connections shall be welded, galvanized or aluminum, according to Article 1006.30 or 1006.34.

All posts, railing, splices, anchor devices, and plates shall be painted black using the Inorganic Zinc Rich Primer / Acrylic / Acrylic System for shop and field painting of new structural steel.

Fasteners shall be mechanically galvanized in painted areas.

Post spacing between the points shown in the table is at the discretion of the fabricator, in order to provide an aesthetically pleasing and cost effective design. Spacing of posts shall not exceed 10'-0".

Posts and vertical bars shall be fabricated to be plumb when installed on the retaining wall. Angle the horizontal rails as necessary to follow the vertical profile of the top of retaining wall.

Posts shall be placed in Class SI Conrete Foundation as shown in the Typical Wall Section. Concrete Foundation shall be included in the cost of Pipe Handrail, Special.

The Contractor shall be responsible for field verification of all horizontal and vertical geometry prior to fabrication of the handrail.

Handrail shall satisfy the loading requirements of Section 13.8.2 of the 2017 AASHTO LRFD Bridge Design Specifications, 8th Edition for Pedestrian Railing.

Member sizes shown are for estimating purposes only. The Contractor shall provide design calculations sealed by a Structural Engineer licensed in the State of Illinois with the actual member sizes used for fabrication.

Clear space between elements of the railing shall not allow the passage of a sphere greater than 4" in diameter.

This work shall consist of designing, furnishing, galvanizing, painting, and erecting handrails as listed above and according to these plans. This work shall be paid for at the contract unit price per FOOT for PIPE HANDRAIL, SPECIAL.

NOTES:

EXISTING RETAINING WALL WAS CONSTRUCTED AT AN UNKNOWN DATE AND IS OF HISTORICAL SIGNIFICANCE. EXISTING RETAINING WALL IS 59' IN TOTAL LENGTH MEASURED ALONG THE FRONT FACE OF THE WALL. IT IS COMPOSED OF HISTORIC STONE BLOCKS.

38' OF EXISTING WALL IS TO BE CAREFULLY DECONSTRUCTED, SALVAGED, AND RECONSTRUCTED IN ACCORDANCE WITH THE SPECIAL PROVISION FOR RETAINING WALL, SPECIAL. CONSTRUCTION VIBRATION MONITORING SHALL BE PERFORMED IN ACCORDANCE WITH THE CONTRACT SPECIAL PROVISIONS.

DESIGN SPECIFICATIONS SHALL BE IN ACCORDANCE WITH THE 2017 AASHTO LRFD BRIDGE DESIGN SPECIFICATIONS, 8TH EDITION.

TOTAL BILL OF MATERIAL

ITEM	UNIT	TOTAL
GEOCOMPOSITE WALL DRAIN	SQ YD	10
RETAINING WALL REMOVAL	FOOT	38
RETAINING WALL, SPECIAL	SQ FT	99
PIPE UNDERDRAINS FOR STRUCTURES 4"	FOOT	38

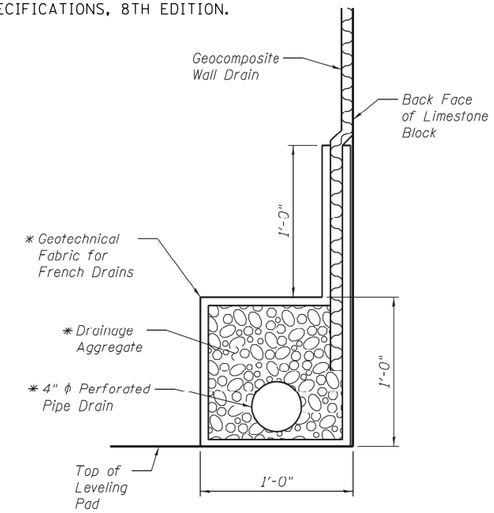

PIPE UNDERDRAIN DETAIL

* Included in the cost of Pipe Underdrains for Structures 4".

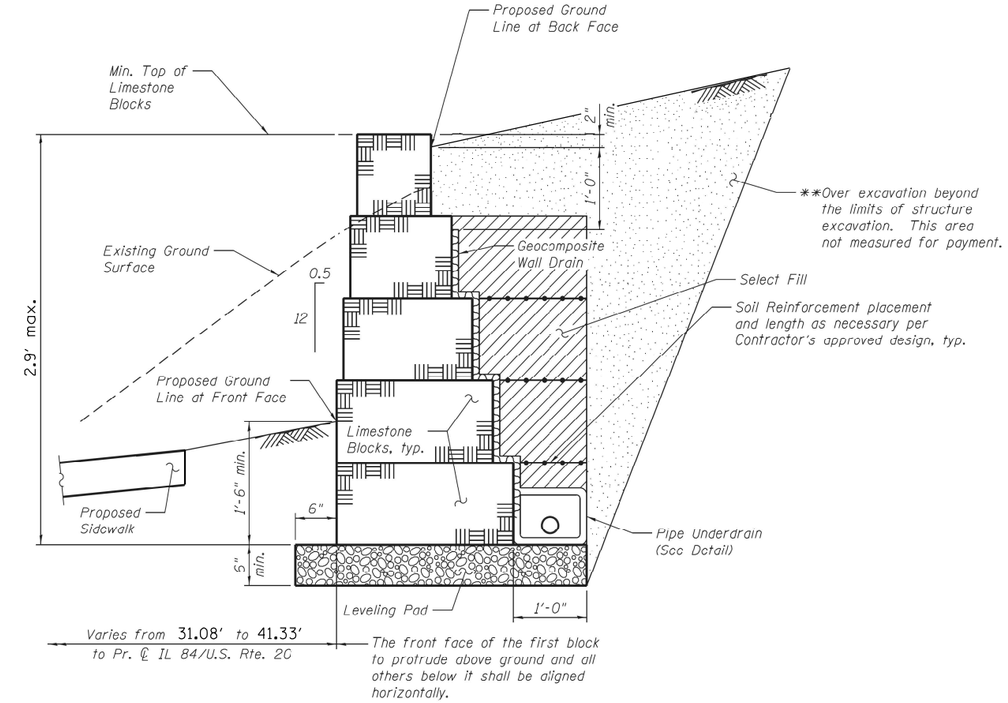

TYPICAL WALL SECTION

** Backfill remainder of structure excavation and over excavation with same material specified for select fill.

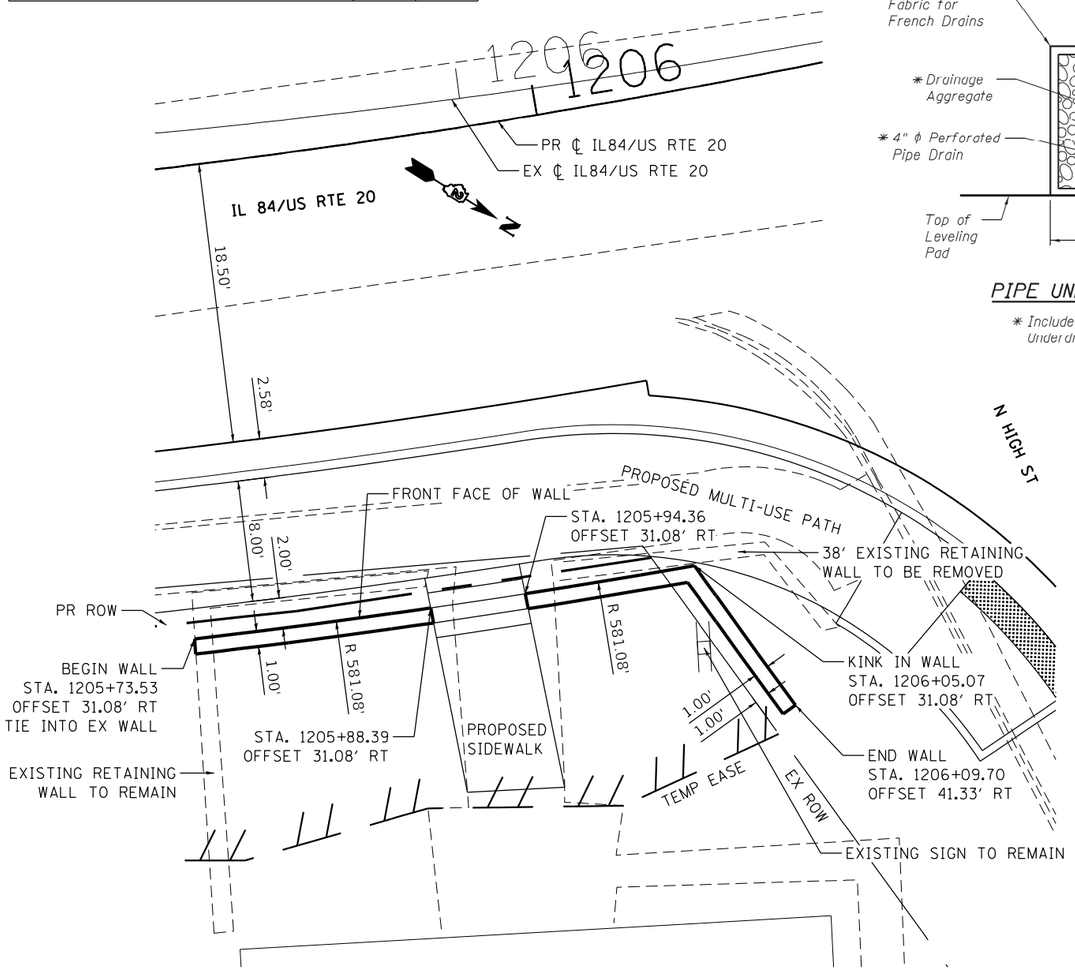

PLAN

STATIONS AND OFFSETS ARE MEASURED FROM PROPOSED ℄ IL 84/U.S. RTE. 20 TO PROPOSED GROUND LINE AT FRONT FACE OF WALL

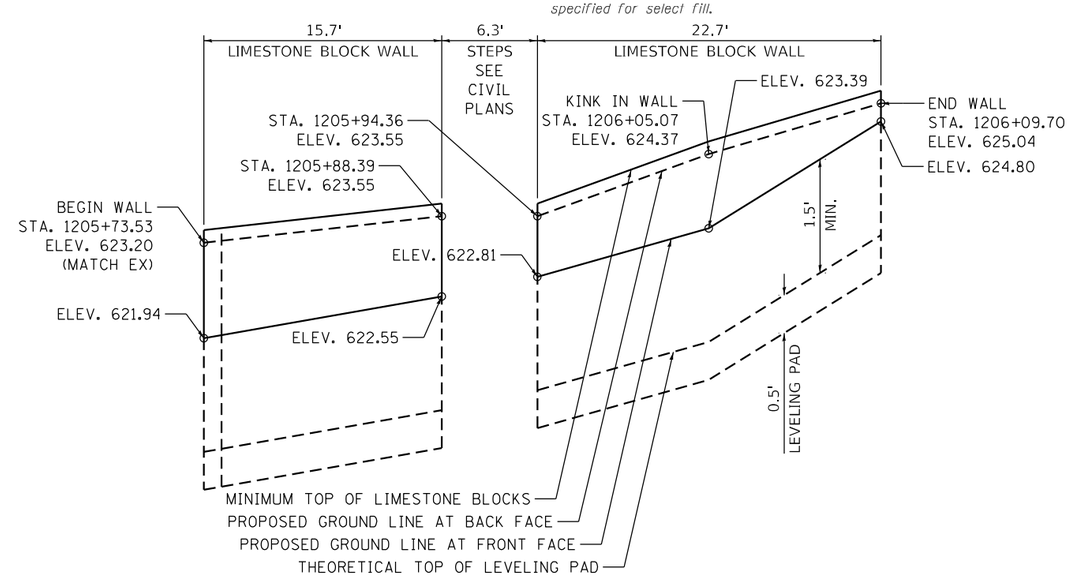

ELEVATION

(UNFOLDED ALONG FRONT FACE OF WALL)

MODEL: Default
FILE NAME: S:\PROJECTS\2010\109510_IDOT_PTB155\Item29 Galena US 20\DESIGN\TRANSWALL D.dgn

WILLETT HOFMANN & ASSOCIATES INC ENGINEERING ARCHITECTURE LAND SURVEYING 909 EAST 2ND STREET, DIXON, IL 61021-0367 T: 815-284-3301 DESIGN FIRM: 184-000710	USER NAME = mslick	DESIGNED - AMF	REVISED -	STATE OF ILLINOIS DEPARTMENT OF TRANSPORTATION	IL RTE 84 / US 20 WALL D DETAILS
		DRAWN - TJA	REVISED -		
	PLOT SCALE = 120.0000 ' / ft.	CHECKED - GFS	REVISED -		
	PLOT DATE = 10/15/2021	DATE - 5/22/20	REVISED -		SCALE: 1" : 5' SHEET 1 OF 1 SHEETS

F.A.P. RTE.	SECTION	COUNTY	TOTAL SHEETS	SHEET NO.
301	29R-1	JO DAVIESS	679	310
		CONTRACT NO. 64880		
		ILLINOIS FED. AID PROJECT		

NOTES:

EXISTING RETAINING WALL WAS CONSTRUCTED AT AN UNKNOWN DATE AND IS OF HISTORICAL SIGNIFICANCE. EXISTING RETAINING WALL IS 62' IN TOTAL LENGTH MEASURED ALONG THE FRONT FACE OF THE WALL. IT IS COMPOSED OF HISTORIC STONE BLOCKS.

39' OF EXISTING WALL IS TO BE CAREFULLY DECONSTRUCTED, SALVAGED, AND RECONSTRUCTED IN ACCORDANCE WITH THE SPECIAL PROVISION FOR RETAINING WALL, SPECIAL. CONSTRUCTION VIBRATION MONITORING SHALL BE PERFORMED IN ACCORDANCE WITH THE CONTRACT SPECIAL PROVISIONS.

DESIGN SPECIFICATIONS SHALL BE IN ACCORDANCE WITH THE 2017 AASHTO LRFD BRIDGE DESIGN SPECIFICATIONS, 8TH EDITION.

TOTAL BILL OF MATERIAL

ITEM	UNIT	TOTAL
GEOCOMPOSITE WALL DRAIN	SQ YD	10
RETAINING WALL REMOVAL	FOOT	39
RETAINING WALL, SPECIAL	SQ FT	89
PIPE UNDERDRAINS FOR STRUCTURES 4"	FOOT	36

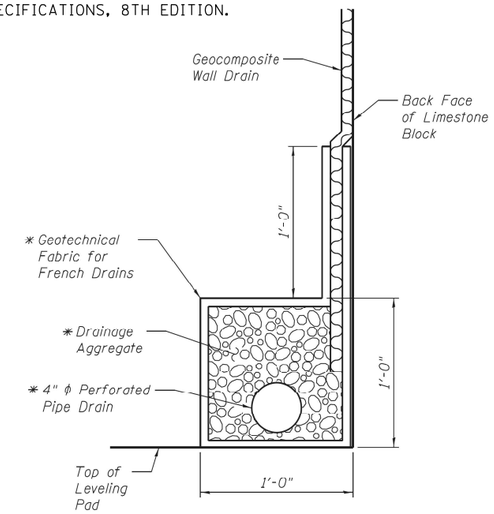

PIPE UNDERDRAIN DETAIL

* Included in the cost of Pipe Underdrains for Structures 4".

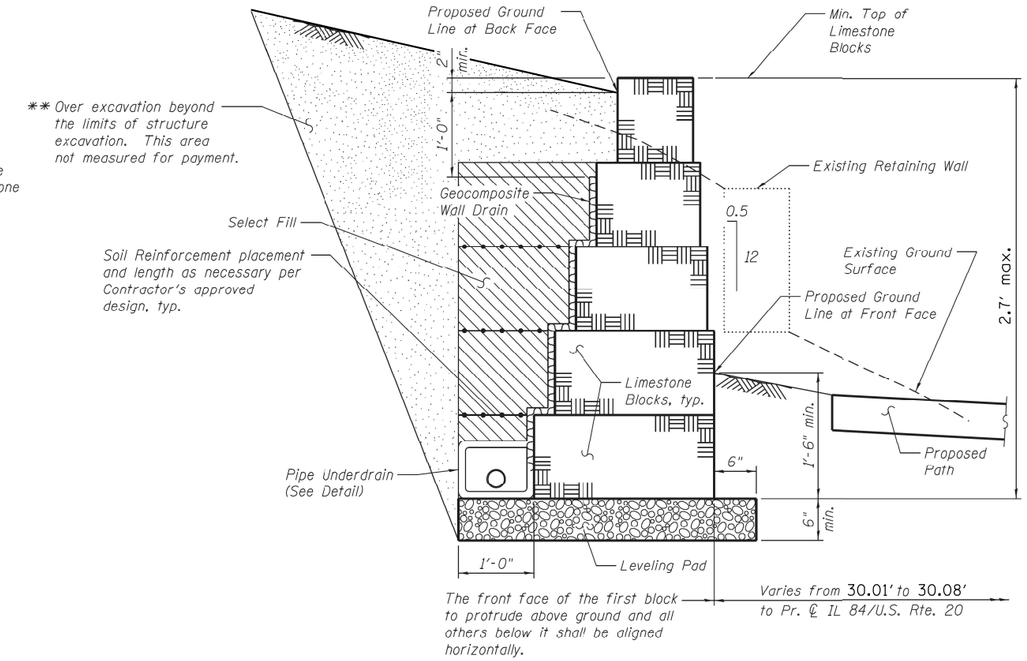

TYPICAL WALL SECTION

** Backfill remainder of structure excavation and over excavation with same material specified for select fill.

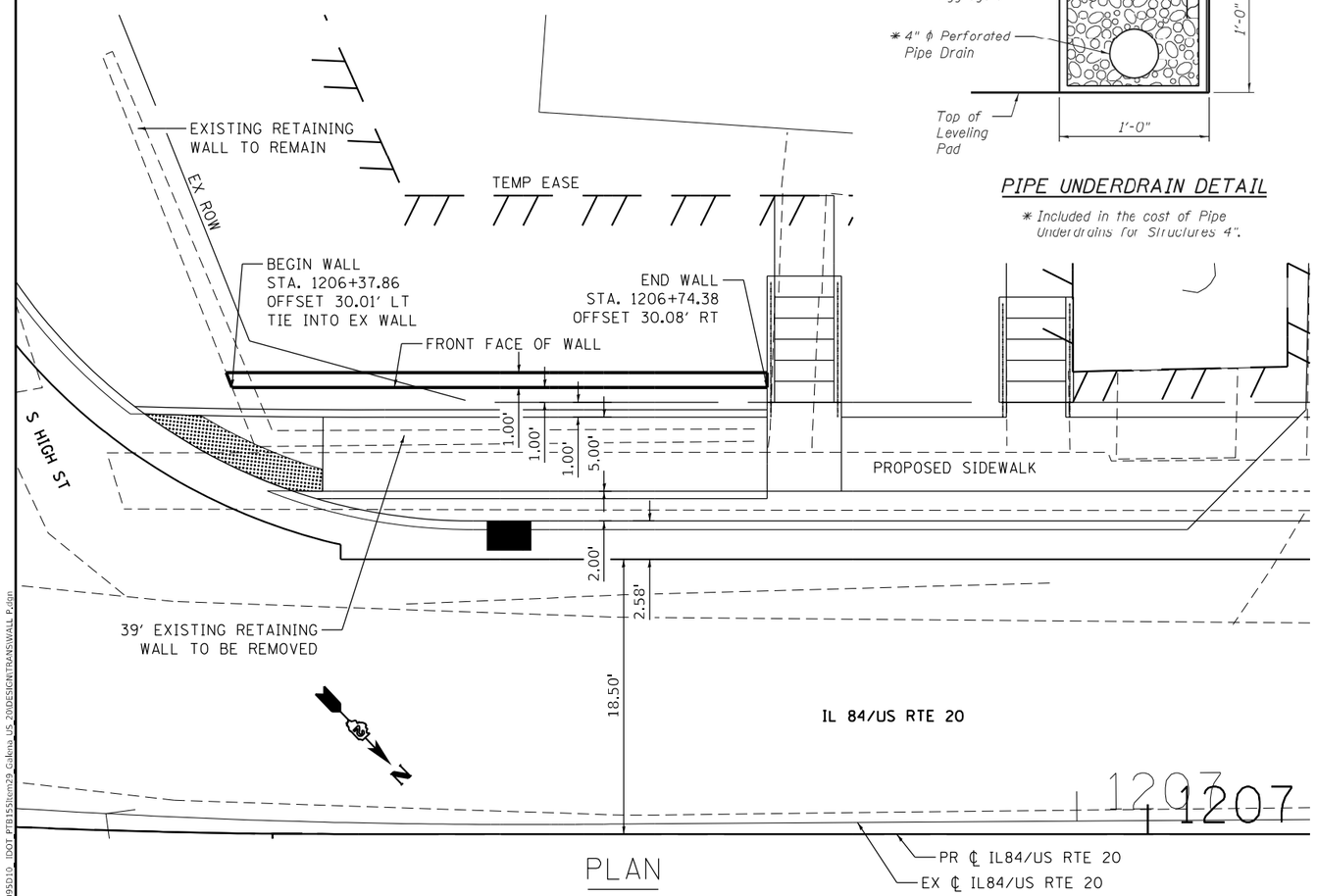

PLAN

STATIONS AND OFFSETS ARE MEASURED FROM PROPOSED ℄ IL 84/U.S. RTE. 20 TO PROPOSED GROUND LINE AT FRONT FACE OF WALL

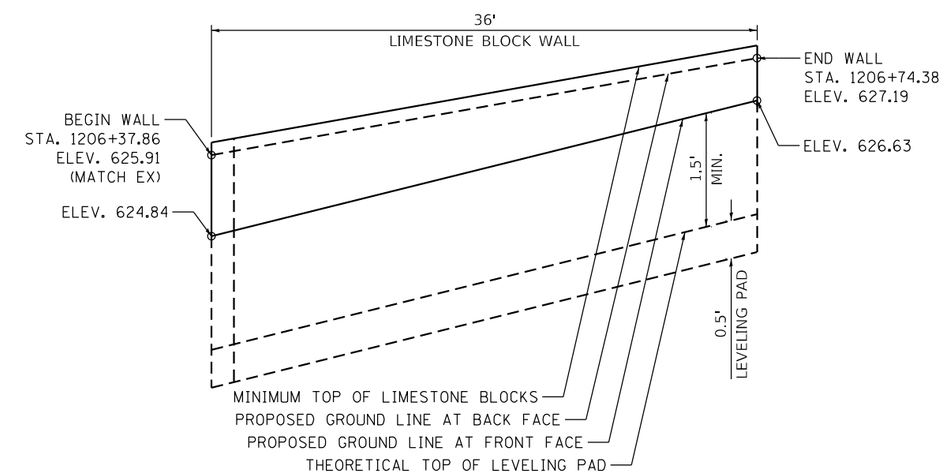

ELEVATION

(LOOKING AT FRONT FACE OF WALL)

MODEL: Default
FILE NAME: S:\PROJECTS\2010\1095D10_IDOT_PTB155Item29_Galena_US_20\DESIGN\TRANSWALL_P.dgn

WILLETT HOFMANN & ASSOCIATES INC ENGINEERING ARCHITECTURE LAND SURVEYING 809 EAST 2ND STREET, DIXON, IL 61021-0362 P: (815) 284-3300 DESIGN FIRM: 184-000910	USER NAME = mslick	DESIGNED - AMF	REVISED -	STATE OF ILLINOIS DEPARTMENT OF TRANSPORTATION	IL RTE 84 / US 20 WALL P DETAILS
		DRAWN - TJA	REVISED -		
	PLOT SCALE = 120.0000 ' / in.	CHECKED - GFS	REVISED -		
	PLOT DATE = 10/15/2021	DATE - 5/22/20	REVISED -		SCALE: 1" : 5' SHEET 1 OF 1 SHEETS

F.A.P. RTE.	SECTION	COUNTY	TOTAL SHEETS	SHEET NO.
301	29R-1	JO DAVIESS	679	311
		CONTRACT NO. 64880		
		ILLINOIS	FED. AID PROJECT	

Benchmark: Handrail at Sta. 1195+33.06, 73.35′ Rt. of existing ℄ IL 84/U.S. Rte. 20, Elev. 615.35.

Existing Structure: None.

Northbound traffic will be maintained on IL 84/U.S. Rte. 20 using stage construction. Southbound traffic will be detoured along Gear St.

Notes:
The Limestone Block Wall at this location shall be constructed of Newly Acquired Stone in accordance with the Special Provision for Retaining Wall, Special.
Construction vibration monitoring shall be performed in accordance with the contract Special Provisions.
The Flagstone Sidewalk is roughly 2′-0" wide x 55′-0" long, and shall fill the space between the back face of wall and the Pipe Handrail, Special.

LEGEND

- Ex. Fence
- Ex. Ungerground Water Pipe
- Pr. Ungerground Water Pipe
- Pr. Sanitary Sewer
- Ex. Sanitary Sewer
- Pr. Inlet
- Pr. Storm Sewer
- Pr. Water Valve Box
- Pr. Handrail

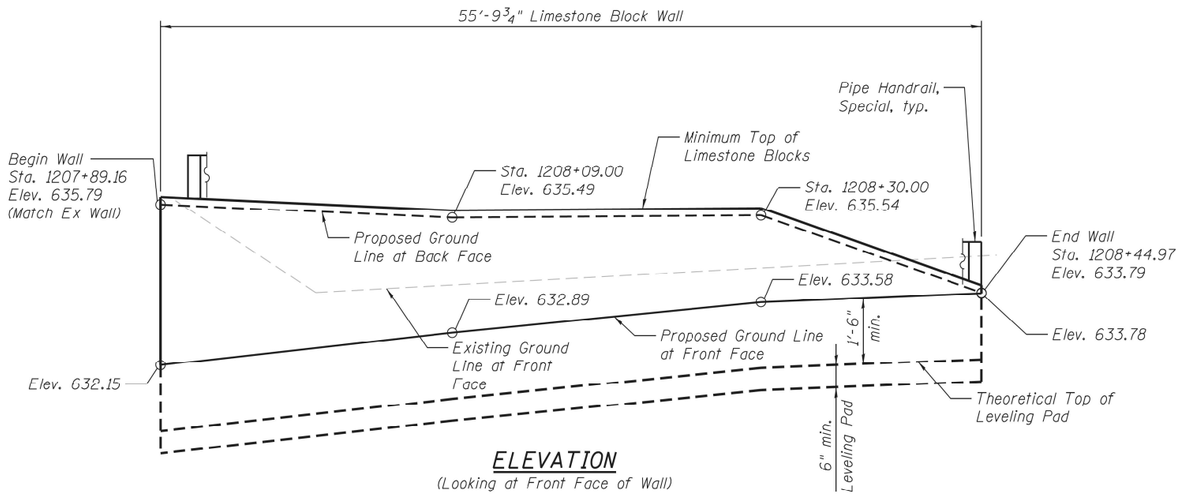

ELEVATION

(Looking at Front Face of Wall)

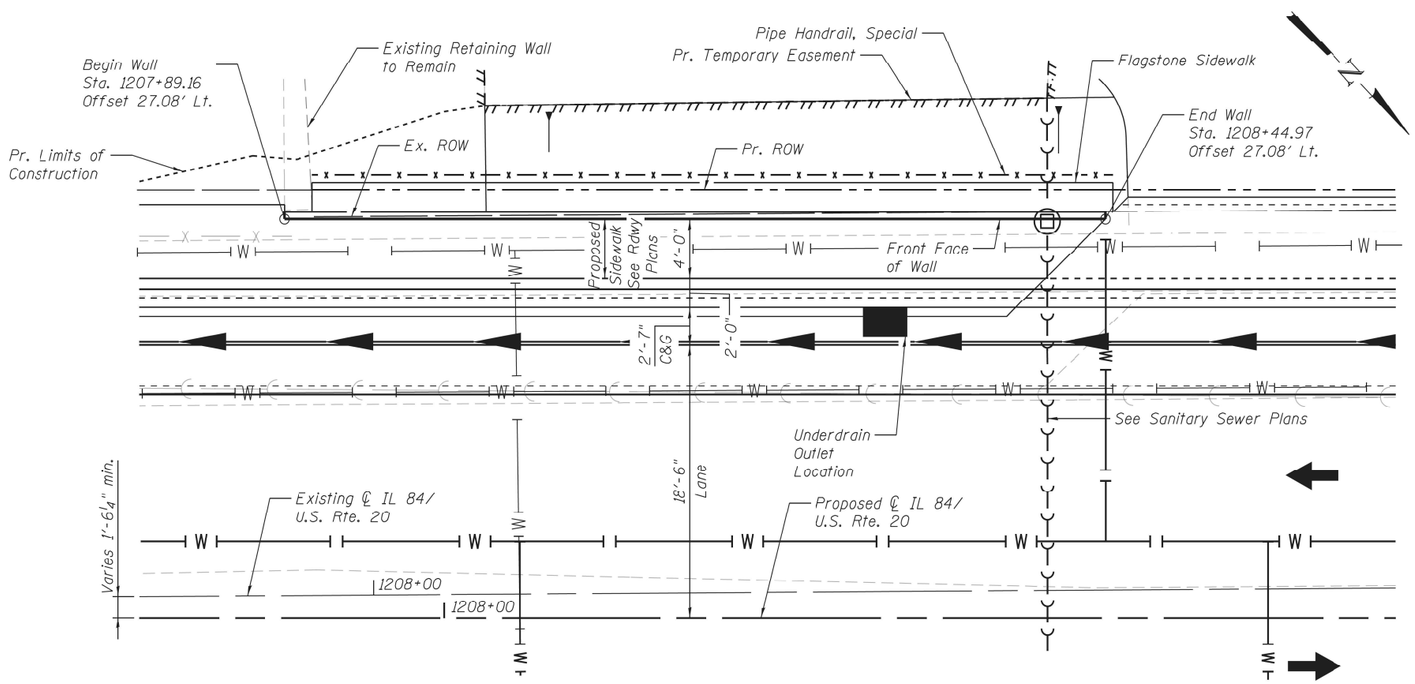

PLAN

Stations and offsets are measured from Proposed ℄ IL 84/U.S. Rte. 20 to Proposed Ground Line at Front Face of Wall.

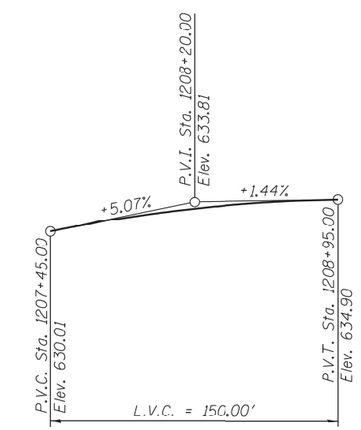

PROFILE GRADE

(Along Proposed ℄ IL 84/U.S. Rte. 20)

DESIGN SPECIFICATIONS

2017 AASHTO LRFD Bridge Design Specifications, 8th Edition

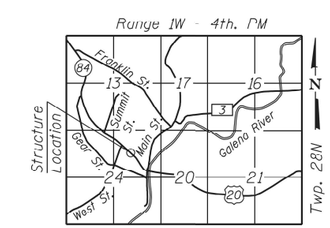

LOCATION SKETCH

GENERAL PLAN & ELEVATION
IL 84/U.S. ROUTE 20
F.A.P. RTE. 301 - SEC. 29R-1
JO DAVIESS COUNTY
STATION 1207+89.16 TO 1208+44.97
WALL E

MODEL: Wall_E-D264880-001
FILE NAME: E:\1019\Struct\Wall E\3. Final Plans\CADD_Sheets\Wall_E-D264880.dgn

LIN ENGINEERING, LTD.
Consulting Engineers
Springfield, Illinois

USER NAME = LIN06-PC	DESIGNED - AML	REVISED -	
	CHECKED - VPT	REVISED -	
PLOT TIME = 12:49:58 PM	DRAWN - AML	REVISED -	
PLOT DATE = 10/14/2021	CHECKED - VPT	REVISED -	

STATE OF ILLINOIS
DEPARTMENT OF TRANSPORTATION

GENERAL PLAN AND ELEVATION
WALL E

SHEET 1 OF 2 SHEETS

F.A.P. RTE.	SECTION	COUNTY	TOTAL SHEETS	SHEET NO.
301	29R-1	JO DAVIESS	679	312
		CONTRACT NO. 64880		
		ILLINOIS	FED. AID PROJECT	

10/14/2021 12:49:58 PM

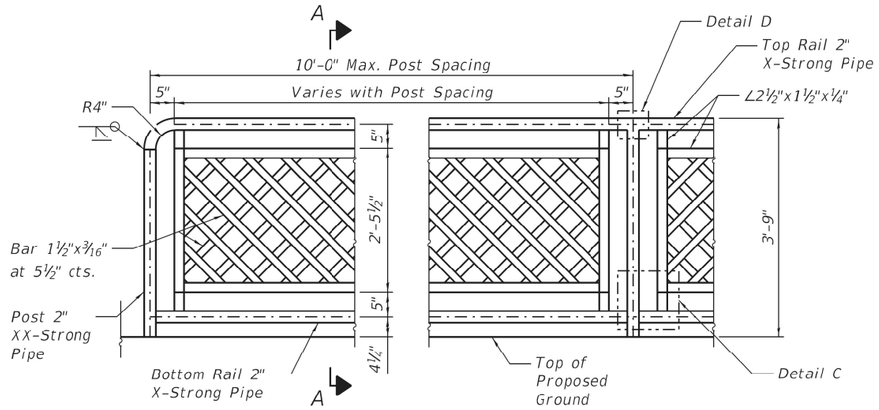

ELEVATION - PIPE HANDRAIL, SPECIAL

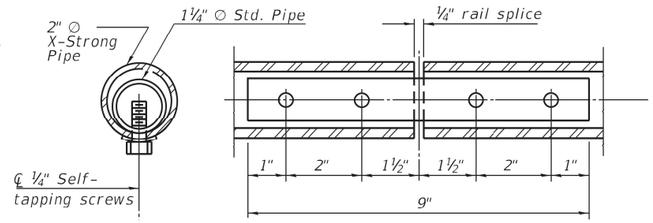

RAIL SPLICE

PIPE HANDRAIL, SPECIAL LOCATION

Point	Station	Offset
Begin	1207+91.04	30.08' Lt.
End	1208+45.48	30.08' Lt.

TOTAL BILL OF MATERIAL

Item	Unit	Total
Geocomposite Wall Drain	Sq.Yd.	20
Flagstone Sidewalk	Sq.Ft.	109
Pipe Handrail, Special	Foot	55
Retaining Wall, Special	Sq.Ft.	218
Pipe Underdrains for Structures 4"	Foot	56

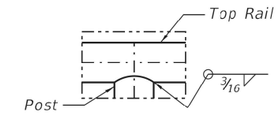

DETAIL D

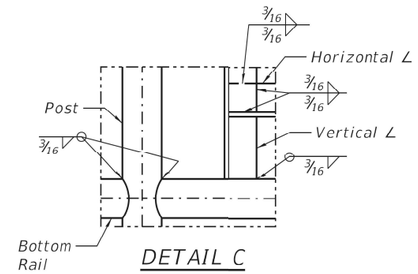

DETAIL C

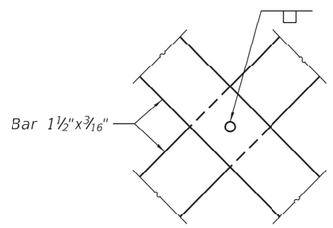

VIEW B-B

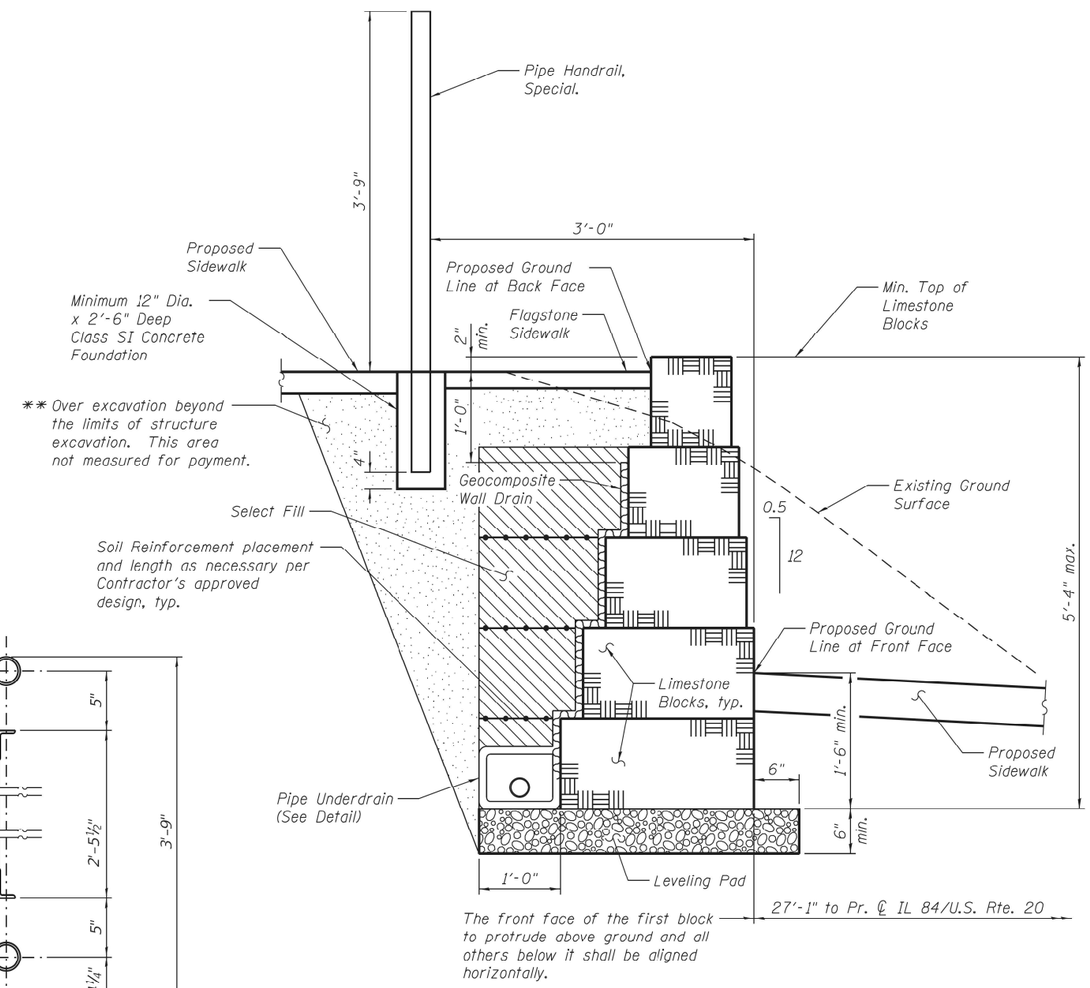

TYPICAL WALL SECTION

** Backfill remainder of structure excavation and over excavation with same material specified for select fill.

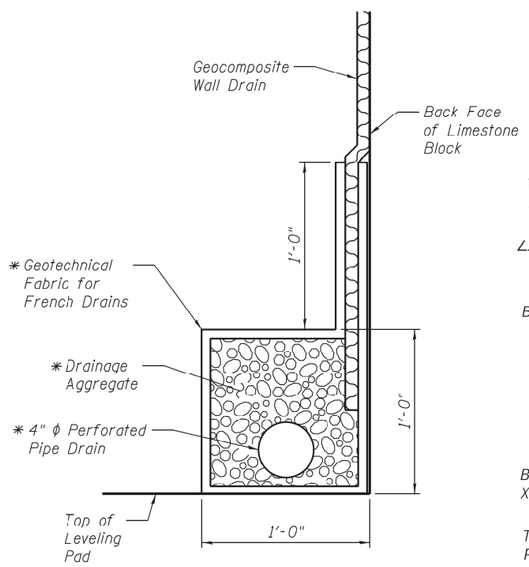

PIPE UNDERDRAIN DETAIL

* Included in the cost of Pipe Underdrains for Structures 4".

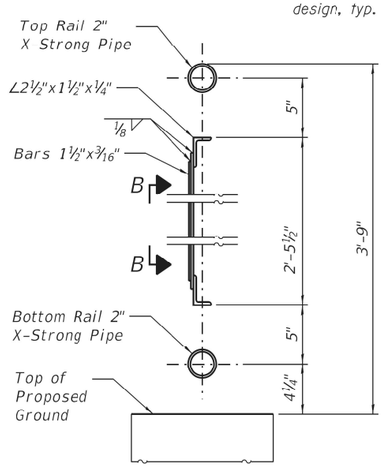

SECTION A-A

Notes:

Gripping surfaces shall be uninterrupted by posts, other construction elements, or obstructions.

Ends of handrail shall be rounded.

Handrail shall not rotate within their fittings.

Handrail shall conform to Section 509 of the Standard Specifications, with the exception that all pipe and connections shall be welded, galvanized or aluminum, according to Article 1006.30 or 1006.34.

All posts, railing, splices, anchor devices, and plates shall be painted black using the Inorganic Zinc Rich Primer / Acrylic / Acrylic System for shop and field painting of new structural steel.

Fasteners shall be mechanically galvanized in painted areas.

Post spacing between the points shown in the table is at the discretion of the fabricator, in order to provide an aesthetically pleasing and cost effective design. Spacing of posts shall not exceed 10'-0".

Posts and vertical bars shall be fabricated to be plumb when installed on the retaining wall. Angle the horizontal rails as necessary to follow the vertical profile of the top of retaining wall.

Posts shall be placed in Class SI Conrete Foundation as shown in the Typical Wall Section. Concrete Foundation shall be included in the cost of Pipe Handrail, Special.

The Contractor shall be responsible for field verification of all horizontal and vertical geometry prior to fabrication of the handrail.

Handrail shall satisfy the loading requirements of Section 13.8.2 of the 2017 AASHTO LRFD Bridge Design Specifications, 8th Edition for Pedestrian Railing.

Member sizes shown are for estimating purposes only. The Contractor shall provide design calculations sealed by a Structural Engineer licensed in the State of Illinois with the actual member sizes used for fabrication.

Clear space between elements of the railing shall not allow the passage of a sphere greater than 4" in diameter.

This work shall consist of designing, furnishing, galvanizing, painting, and erecting handrails as listed above and according to these plans. This work shall be paid for at the contract unit price per FOOT for PIPE HANDRAIL, SPECIAL.

Benchmark: Handrail at Sta. 1195+33.06, 73.35' Rt. of existing ℄ IL 84/U.S. Rte. 20, Elev. 615.35.

Existing Structure: None.

Northbound traffic will be maintained on IL 84/U.S. Rte. 20 using stage construction. Southbound traffic will be detoured along Gear St.

Notes:
The Limestone Block Wall at this location shall be constructed of Newly Acquired Stone in accordance with the Special Provision for Retaining Wall, Special.
Construction vibration monitoring shall be performed in accordance with the contract Special Provisions.

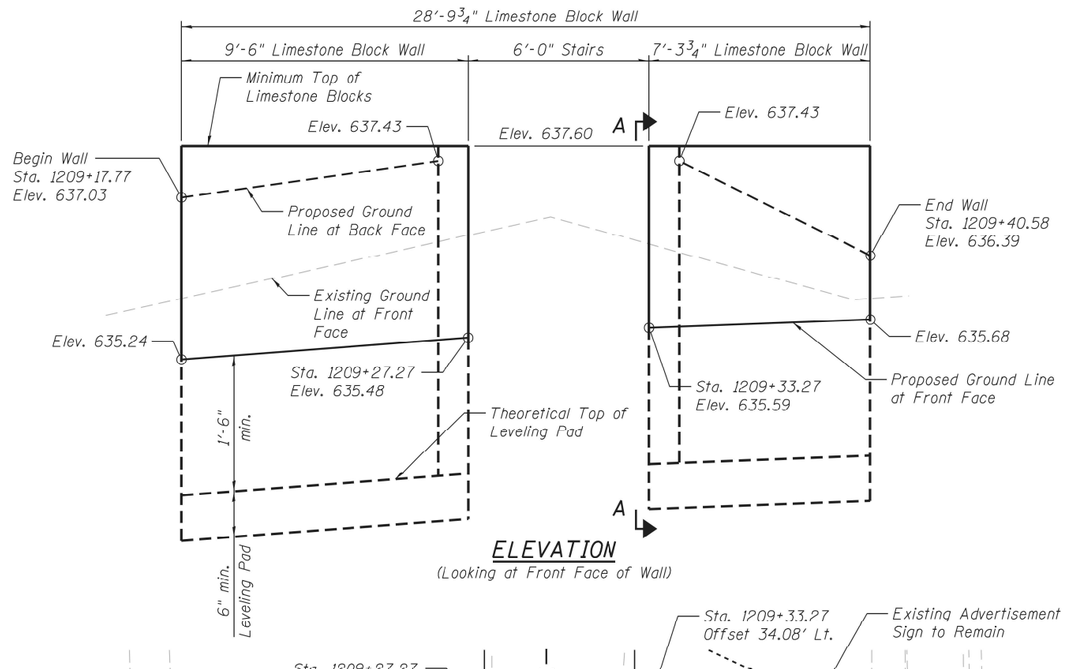

ELEVATION
(Looking at Front Face of Wall)

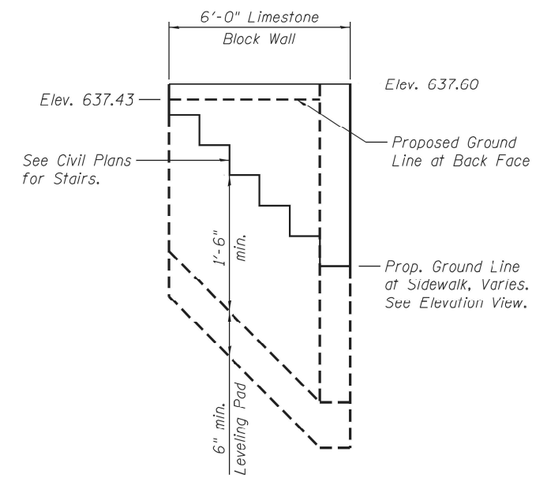

VIEW A-A
(Opposite Side Wall Similar)

LEGEND

- Ex. Ungerground Water Pipe
- Pr. Ungerground Water Pipe
- Ex. Sanitary Sewer
- Pr. Manhole
- Pr. Inlet
- Pr. Storm Sewer
- Pr. Sanitary Sewer
- Pr. Handrail

DESIGN SPECIFICATIONS

2017 AASHTO LRFD Bridge Design Specifications, 8th Edition

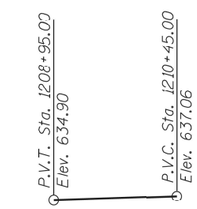

PROFILE GRADE
(Along Proposed ℄ IL 84/U.S. Rte. 20)

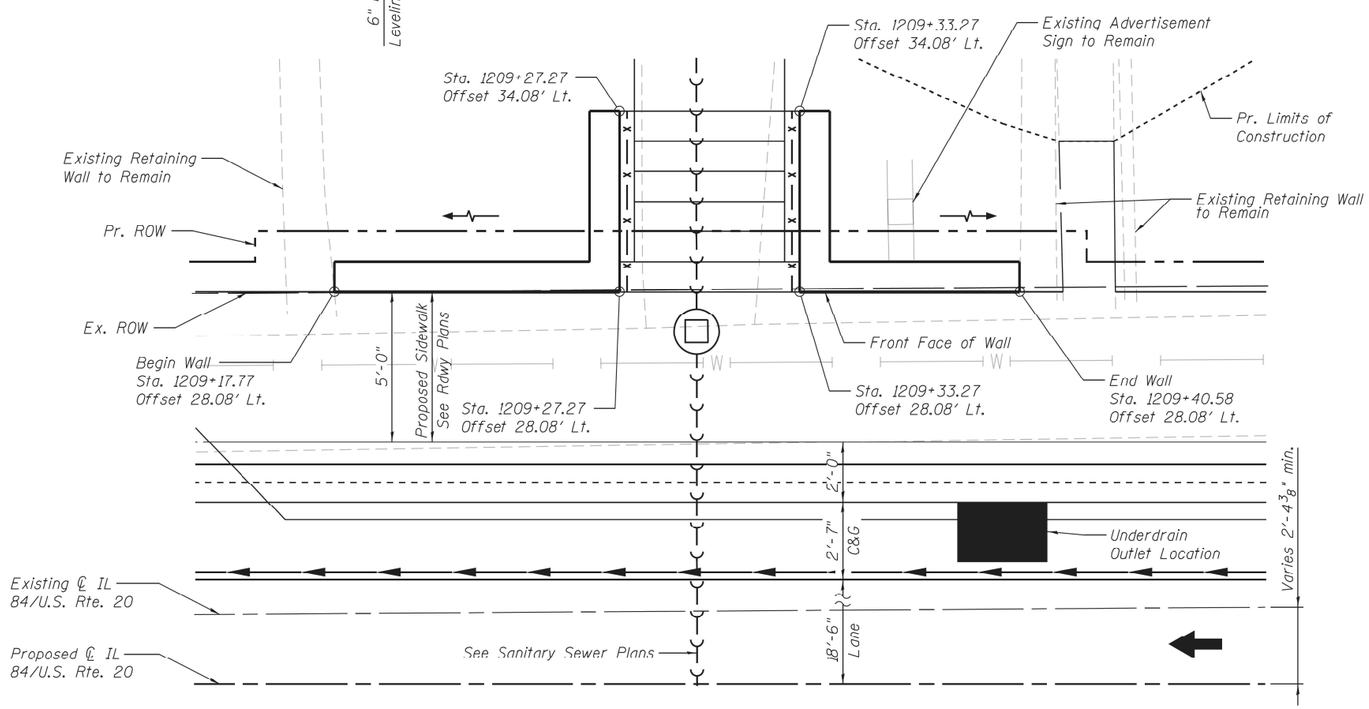

PLAN
Stations and offsets are measured from Proposed ℄ IL 84/U.S. Rte. 20 to Proposed Ground Line at Front Face of Wall.

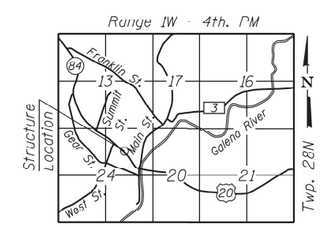

LOCATION SKETCH

GENERAL PLAN & ELEVATION
IL 84/U.S. ROUTE 20
F.A.P. RTE. 301 - SEC. 29R-1
JO DAVIESS COUNTY
STATION 1209+17.77 TO 1209+40.58
WALL F

LIN ENGINEERING, LTD. Consulting Engineers Springfield, Illinois	USER NAME = LIN06-PC	DESIGNED - AML	REVISED -	STATE OF ILLINOIS DEPARTMENT OF TRANSPORTATION	GENERAL PLAN AND ELEVATION WALL F	F.A.P. RTE. 301	SECTION 29R-1	COUNTY JO DAVIESS	TOTAL SHEETS 679 / SHEET NO. 314
	PLOT TIME = 12:50:02 PM	CHECKED - VPT	REVISED -					CONTRACT NO. 64880	
	PLOT DATE = 10/14/2021	DRAWN - AML	REVISED -		SHEET 1 OF 2 SHEETS			ILLINOIS FED. AID PROJECT	
		CHECKED - VPT	REVISED -						

MODEL: Wall_F-D264880-001
FILE NAME: E:\1013\Struct\Wall F\3. Final Plans\CADD_Sheets\Wall_F-D264880.dgn
10/14/2021 12:50:02 PM

TOTAL BILL OF MATERIAL

Item	Unit	Total
Geocomposite Wall Drain	Sq.Yd.	7
Retaining Wall, Special	Sq.Ft.	95
Pipe Underdrains for Structures 4"	Foot	26

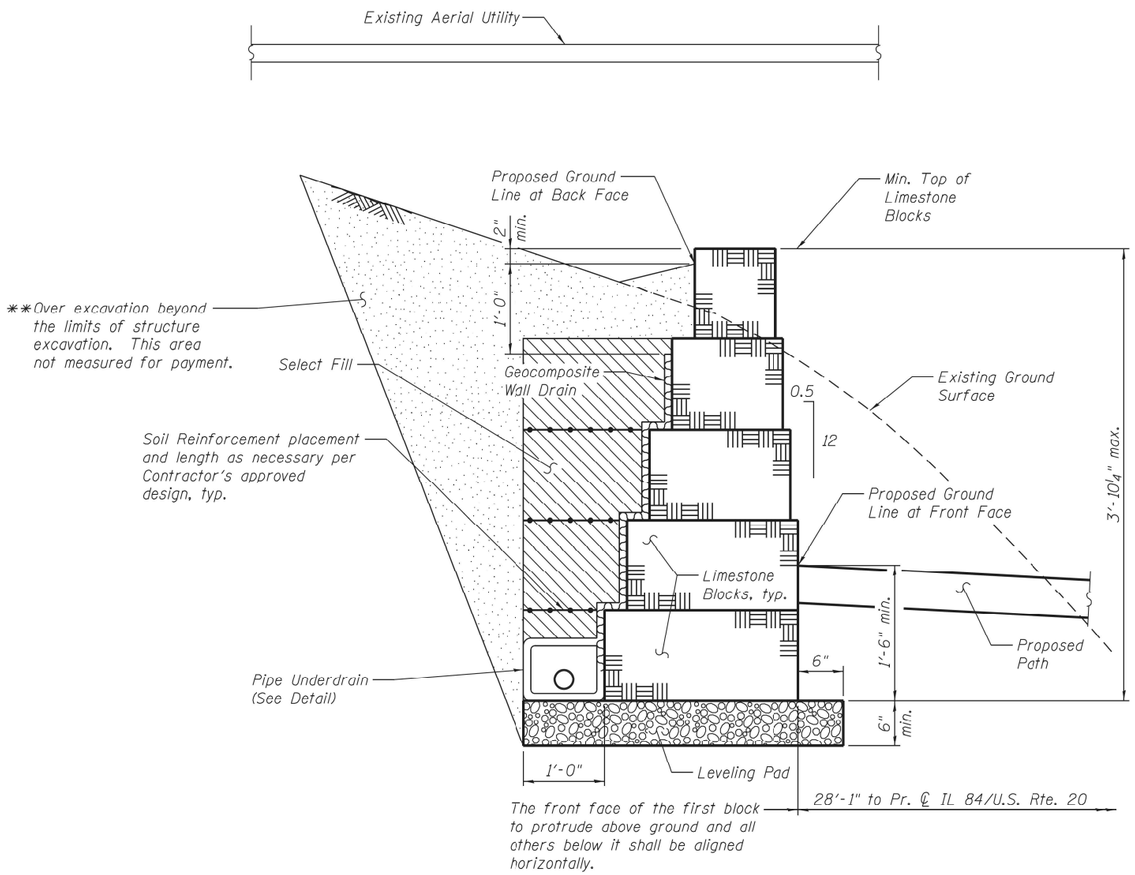

TYPICAL WALL SECTION

** Backfill remainder of structure excavation and over excavation with same material specified for select fill.

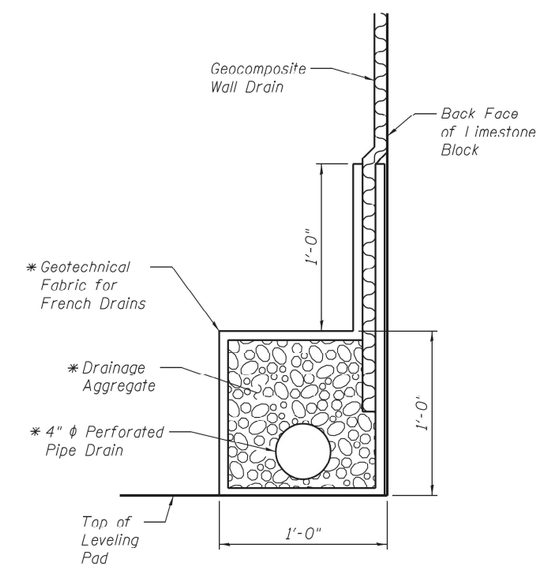

PIPE UNDERDRAIN DETAIL

* Included in the cost of Pipe Underdrains for Structures 4".

MODEL: Wall_F-D264880-002
FILE NAME: E:\1013Struct\Wall F\3. Final Plans\CADD_Sheets\Wall_F-D264880.dgn

LIN ENGINEERING, LTD.
Consulting Engineers
Springfield, Illinois

USER NAME = LIN06-PC	DESIGNED - AML	REVISED -	
	CHECKED - VPT	REVISED -	
PLOT TIME = 12:50:03 PM	DRAWN - AML	REVISED -	
PLOT DATE = 10/14/2021	CHECKED - VPT	REVISED -	

STATE OF ILLINOIS
DEPARTMENT OF TRANSPORTATION

DETAILS
WALL F

SHEET 2 OF 2 SHEETS

F.A.P. RTE.	SECTION	COUNTY	TOTAL SHEETS	SHEET NO.
301	29R-1	JO DAVIESS	679	315
		CONTRACT NO. 64880		
		ILLINOIS	FED. AID PROJECT	

10/14/2021 12:50:03 PM

Benchmark: Handrail at Sta. 1195+33.06, 73.35′ Rt. of existing ℄ IL 84/U.S. Rte. 20, Elev. 615.35.

Existing Structure: Existing retaining wall was constructed at an unknown date and is of historical significance. Existing retaining wall is 116′-2″ in total length measured along the front face of the wall. It is composed of historic stone blocks. The entire length of the existing wall is to be carefully deconstructed and salvaged and will become the property of the City of Galena. Contractor shall deliver salvaged stone to the City, at a time and location to be coordinated with the City Engineer, Andy Lewis, available at (815) 777-1050 or alewis@cityofgalena.org.

Northbound traffic will be maintained on IL 84/U.S. Rte. 20 using stage construction. Southbound traffic will be detoured along Gear St.

Notes:
The Limestone Block Wall at this location shall be constructed of Newly Acquired Stone in accordance with the Special Provision for Retaining Wall, Special.
Construction vibration monitoring shall be performed in accordance with the contract Special Provisions.
Soil boring logs for borings B-1d and B-2d are available within the Roadway plans.

LEGEND

- Boring
- Ex. Sanitary Sewer
- Ex. Water Line
- Ex. Water Valve Box
- Pr. Manhole
- Pr. Inlet
- Pr. Storm Sewer
- Pr. Water Line
- Pr. Water Valve Box
- Pr. Handrail

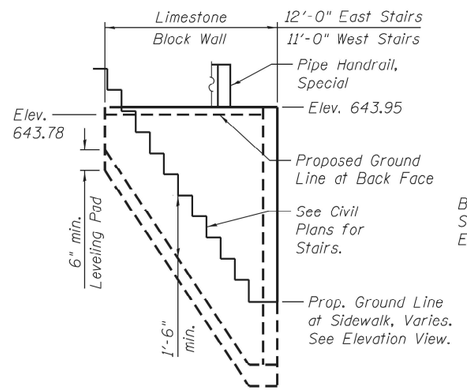

VIEW A-A
(Opposite Side Wall Similar)

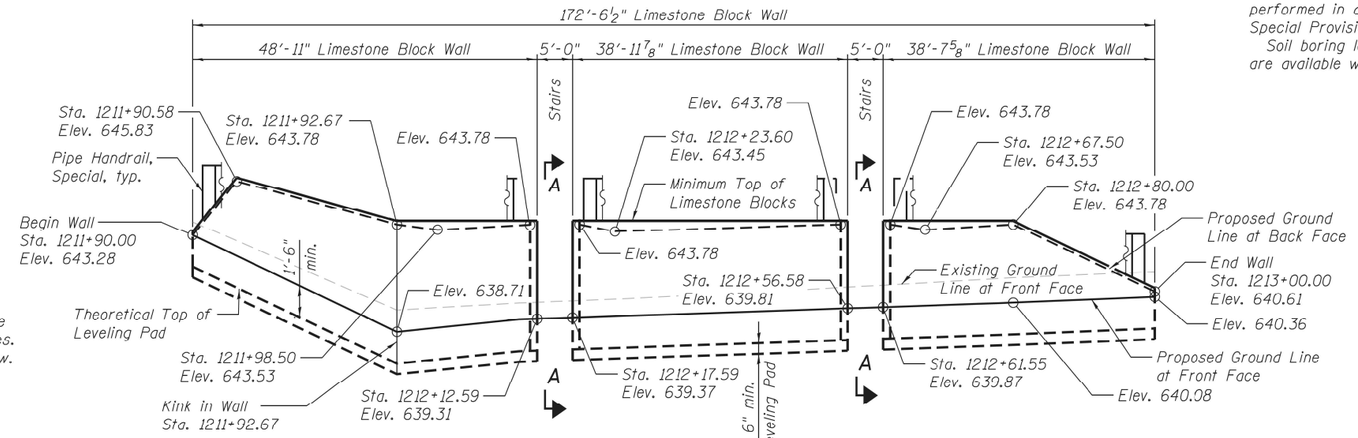

ELEVATION
(Unfolded along Front Face of Wall)

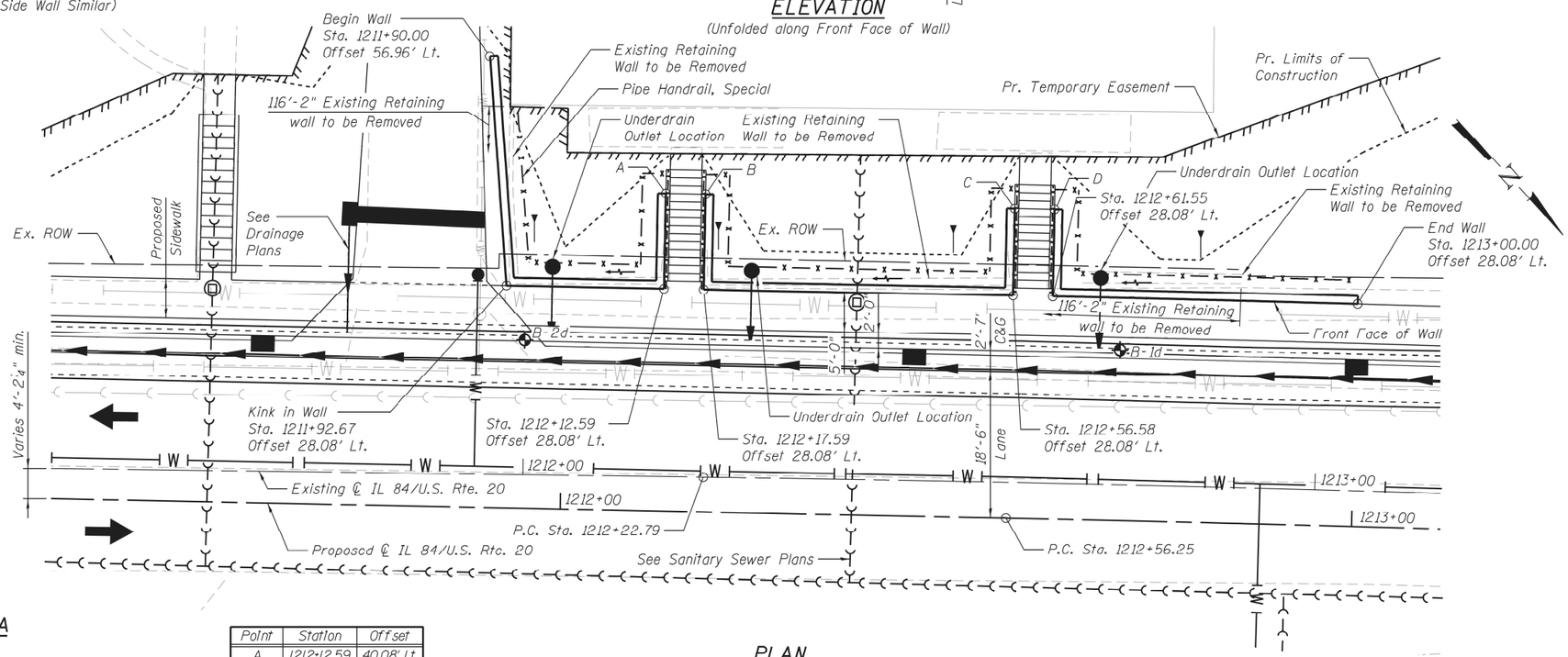

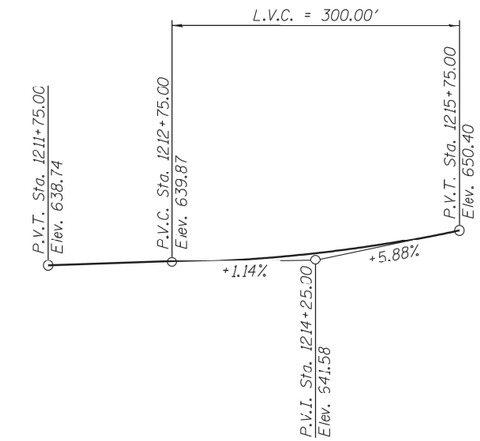

PROFILE GRADE
(Along Proposed ℄ IL 84/U.S. Rte. 20)

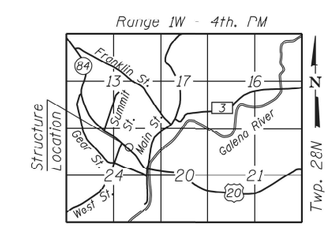

LOCATION SKETCH

CURVE DATA

Prop. Curve 71250
P.I. Sta. = 1214+77.32
Δ = 4° 25′ 21″ (RT)
D = 1° 00′ 03″
R = 5,725.15′
T = 221.07′
L = 441.92′
E = 4.27′
P.C. Sta. = 1212+56.25
P.T. Sta. = 1216+98.17

Point	Station	Offset
A	1212+12.59	40.08′ Lt.
B	1212+17.59	40.08′ Lt.
C	1212+56.58	39.08′ Lt.
D	1212+61.55	39.08′ Lt.

DESIGN SPECIFICATIONS

2017 AASHTO LRFD Bridge Design Specifications, 8th Edition

PLAN

Stations and offsets are measured from Proposed ℄ IL 84/U.S. Rte. 20 to Proposed Ground Line at Front Face of Wall.

GENERAL PLAN & ELEVATION
IL 84/U.S. ROUTE 20
F.A.P. RTE. 301 - SEC. 29R-1
JO DAVIESS COUNTY
STATION 1211+90.00 TO 1213+00.00
WALL G

MODEL: Wall_G-D264880-001
FILE NAME: E:\018\Struct\Wall G3. Final Plans\CADD_Sheets\Wall_G-D264880.dgn

LIN ENGINEERING, LTD.
Consulting Engineers
Springfield, Illinois

USER NAME = LIN06-PC	DESIGNED - AML	REVISED -	
	CHECKED - VPT	REVISED -	
PLOT TIME = 12:50:04 PM	DRAWN - AML	REVISED -	
PLOT DATE = 10/14/2021	CHECKED - VPT	REVISED -	

STATE OF ILLINOIS
DEPARTMENT OF TRANSPORTATION

GENERAL PLAN AND ELEVATION
WALL G

SHEET 1 OF 2 SHEETS

F.A.P. RTE.	SECTION	COUNTY	TOTAL SHEETS	SHEET NO.
301	29R-1	JO DAVIESS	679	316
		CONTRACT NO. 64880		
		ILLINOIS	FED. AID PROJECT	

10/14/2021 12:50:04 PM

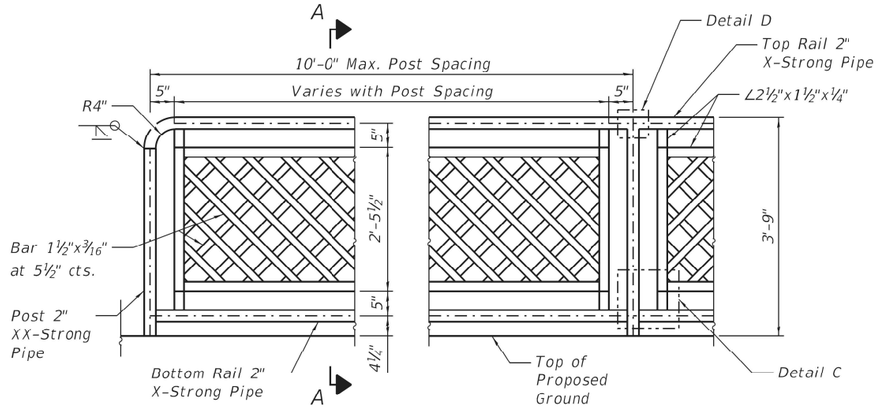

ELEVATION - PIPE HANDRAIL, SPECIAL

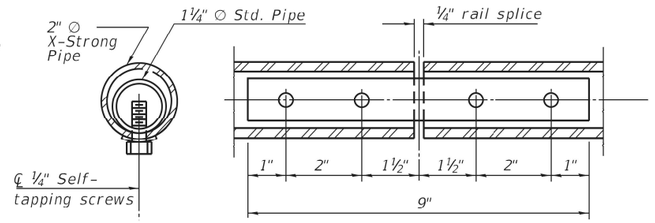

RAIL SPLICE

PIPE HANDRAIL, SPECIAL LOCATION

	Point	Station	Offset
***	Begin	1211+93.58	50.82' Lt.
	Kink	1211+95.40	31.08' Lt.
	Kink	1212+09.59	31.08' Lt.
	Kink	1212+09.59	42.58' Lt.
***	End	1212+12.59	42.58' Lt.
***	Begin	1212+17.59	42.58' Lt.
	Kink	1212+20.59	42.58' Lt.
	Kink	1212+20.59	31.08' Lt.
	Kink	1212+53.58	31.08' Lt.
	Kink	1212+53.58	41.59' Lt.
***	End	1212+56.58	41.59' Lt.
***	Begin	1212+61.55	41.58' Lt.
	Kink	1212+64.52	41.58' Lt.
	Kink	1212+64.53	31.08' Lt.
	End	1212+99.35	31.08' Lt.

*** Station and offset shown are at the anticipated intersection of the pipe handrail with the front face of the wall along the stairs, or at the intersection of the pipe handrail with the building. The actual end point of the handrail shall be adjusted at the discretion of the fabricator in order to provide an aesthetically pleasing end condition, while also minimizing the horizontal clear space between the end of the rail and any adjacent surfaces, appurtenances, or barriers.

TOTAL BILL OF MATERIAL

Item	Unit	Total
Rock Excavation for Structures	Cu.Yd.	10
Geocomposite Wall Drain	Sq.Yd.	76
Retaining Wall Removal	Foot	117
Pipe Handrail, Special	Foot	158.0
Retaining Wall, Special	Sq.Ft.	879
Pipe Underdrains for Structures 4"	Foot	171

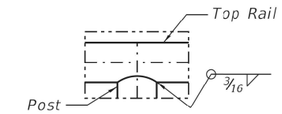

DETAIL D

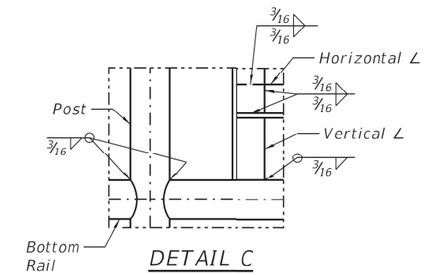

DETAIL C

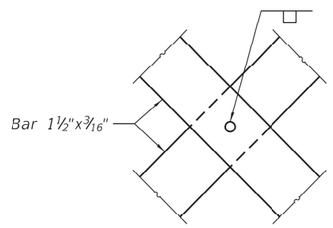

VIEW B-B

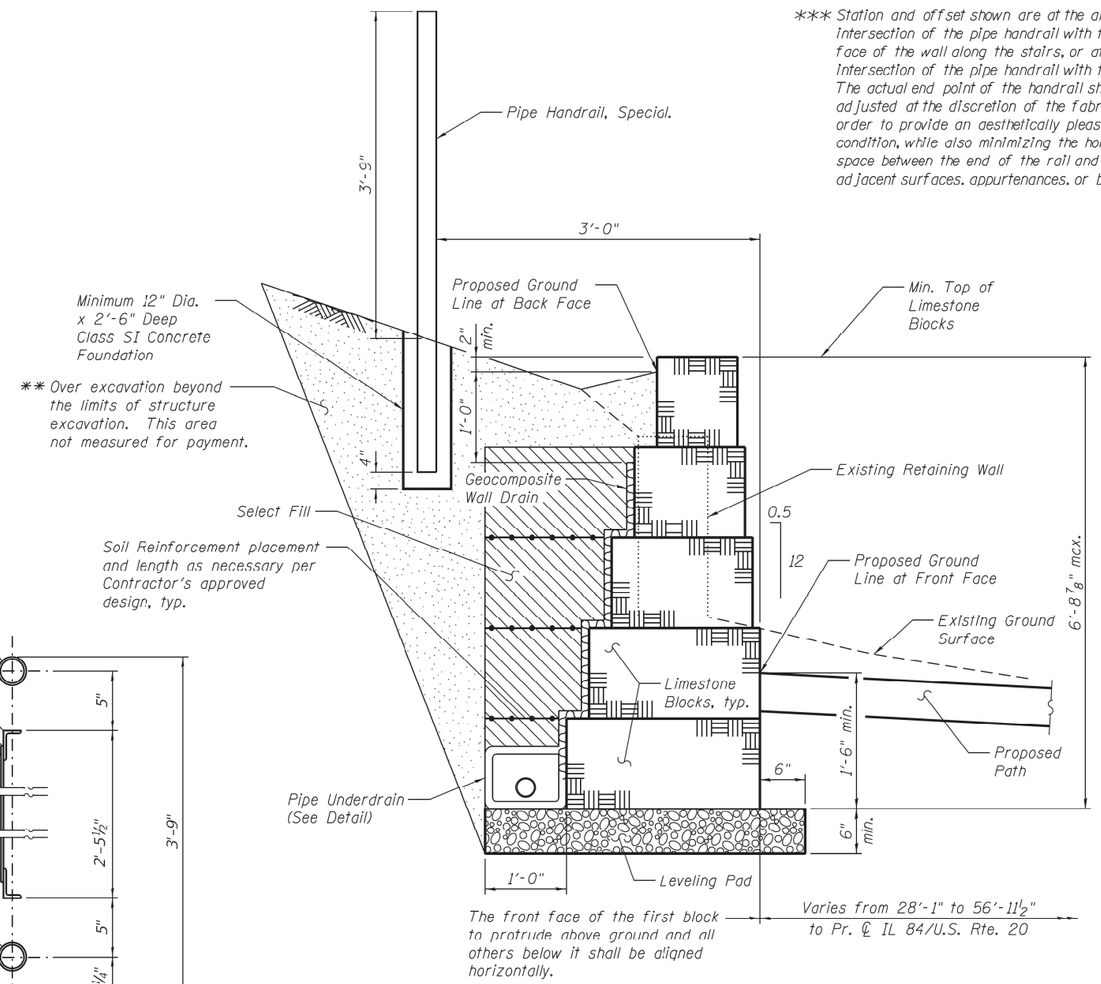

TYPICAL WALL SECTION

** Backfill remainder of structure excavation and over excavation with same material specified for select fill.

Notes:

Gripping surfaces shall be uninterrupted by posts, other construction elements, or obstructions.

Ends of handrail shall be rounded.

Handrail shall not rotate within their fittings.

Handrail shall conform to Section 509 of the Standard Specifications, with the exception that all pipe and connections shall be welded, galvanized or aluminum, according to Article 1006.30 or 1006.34.

All posts, railing, splices, anchor devices, and plates shall be painted black using the Inorganic Zinc Rich Primer / Acrylic / Acrylic System for shop and field painting of new structural steel.

Fasteners shall be mechanically galvanized in painted areas.

Post spacing between the points shown in the table is at the discretion of the fabricator, in order to provide an aesthetically pleasing and cost effective design. Spacing of posts shall not exceed 10'-0".

Posts and vertical bars shall be fabricated to be plumb when installed on the retaining wall. Angle the horizontal rails as necessary to follow the vertical profile of the top of retaining wall.

Posts shall be placed in Class SI Conrete Foundation as shown in the Typical Wall Section. Concrete Foundation shall be included in the cost of Pipe Handrail, Special.

The Contractor shall be responsible for field verification of all horizontal and vertical geometry prior to fabrication of the handrail.

Handrail shall satisfy the loading requirements of Section 13.8.2 of the 2017 AASHTO LRFD Bridge Design Specifications, 8th Edition for Pedestrian Railing.

Member sizes shown are for estimating purposes only. The Contractor shall provide design calculations sealed by a Structural Engineer licensed in the State of Illinois with the actual member sizes used for fabrication.

Clear space between elements of the railing shall not allow the passage of a sphere greater than 4" in diameter.

This work shall consist of designing, furnishing, galvanizing, painting, and erecting handrails as listed above and according to these plans. This work shall be paid for at the contract unit price per FOOT for PIPE HANDRAIL, SPECIAL.

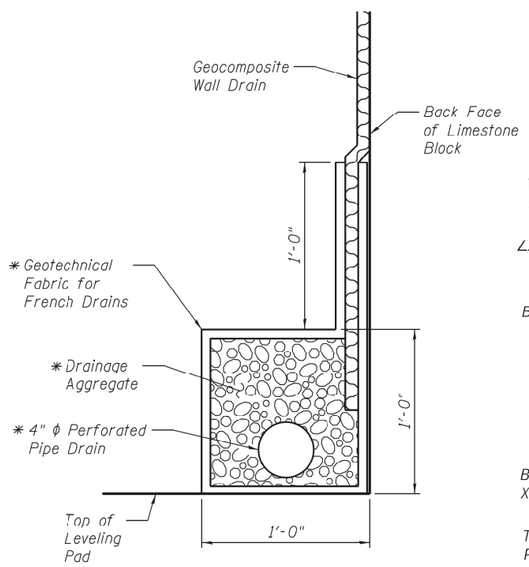

PIPE UNDERDRAIN DETAIL

* Included in the cost of Pipe Underdrains for Structures 4".

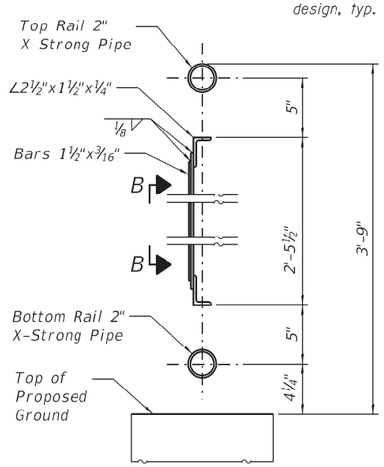

SECTION A-A

LIN ENGINEERING, LTD. Consulting Engineers Springfield, Illinois	USER NAME = LIN06-PC	DESIGNED - AML	REVISED -
		CHECKED - VPT	REVISED -
	PLOT TIME = 12:50:05 PM	DRAWN - AML	REVISED -
	PLOT DATE = 10/14/2021	CHECKED - VPT	REVISED -

STATE OF ILLINOIS
DEPARTMENT OF TRANSPORTATION

DETAILS
WALL G

SHEET 2 OF 2 SHEETS

F.A.P. RTE.	SECTION	COUNTY	TOTAL SHEETS	SHEET NO.
301	29R-1	JO DAVIESS	679	317
		CONTRACT NO. 64880		
		ILLINOIS FED. AID PROJECT		

MODEL: Wall_G-D264880-002
FILE NAME: E:\018\Struct\Wall G\3. Final Plans\CADD_Sheets\Wal_G-D264880.dgn
10/14/2021 12:50:05 PM

Benchmark: Headwall at Sta. 1227+99.96, 35.85' Lt. of existing ℄ IL 84/U.S. Rte. 20, Elev. 682.42.

Existing Structure: None.

Northbound traffic will be maintained on IL 84/U.S. Rte. 20 using stage construction. Southbound traffic will detoured along Gear St.

Note:
Proposed Water Line and Proposed Sanitary Sewer to be located in field to miss soldier piles. See Water Main and Sanitary Sewer Plans.

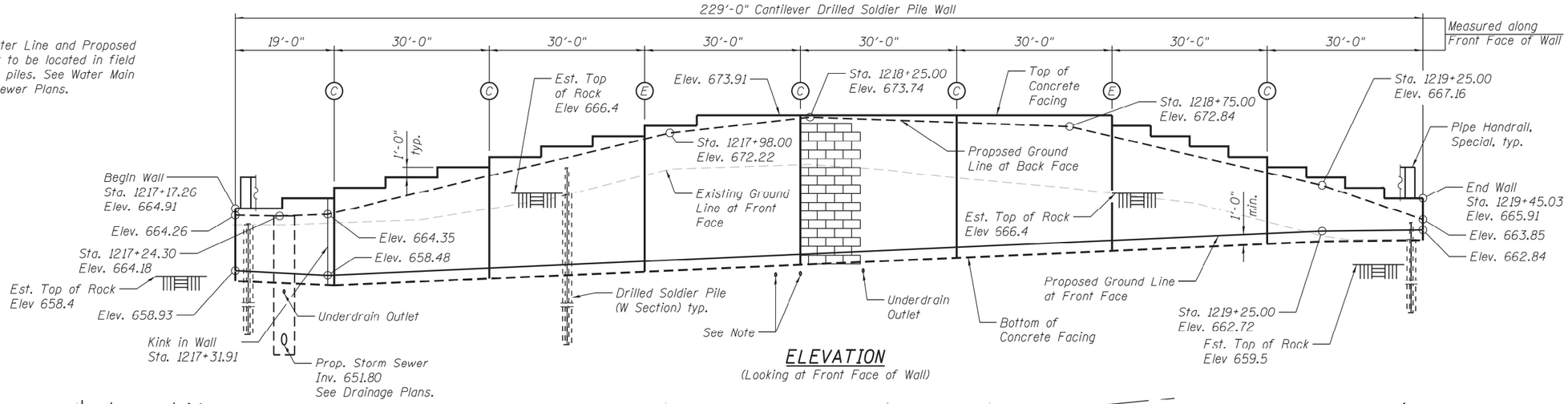

ELEVATION

(Looking at Front Face of Wall)

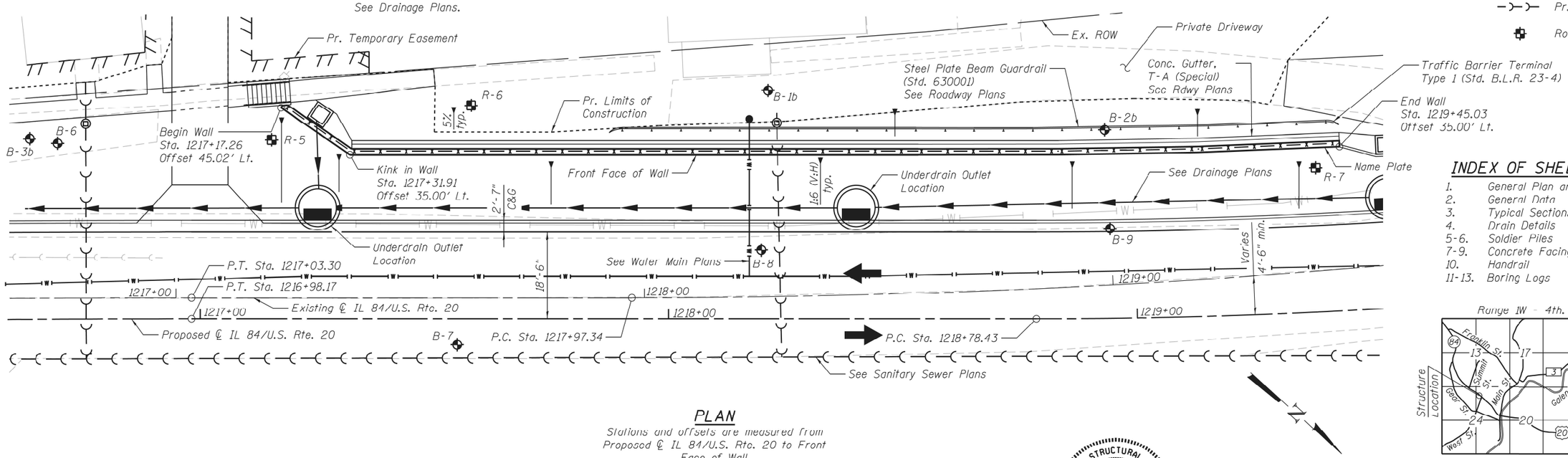

PLAN

Stations and offsets are measured from Proposed ℄ IL 84/U.S. Rte. 20 to Front Face of Wall.

LEGEND

- Boring
- Const. Jt.
- Exp. Jt.
- Ex. Sign
- Pr. Inlet
- Ex. Water
- Pr. Water
- Ex. Lightpole
- Ex. Manhole
- Pr. Manhole
- Ex. Power Pole
- Ex. Sanitary Sewer
- Ex. Storm Sewer
- Ex. Drainage Tile
- Pr. Storm Sewer
- Pr. Sanitary Sewer
- Rock Depth Probe

INDEX OF SHEETS

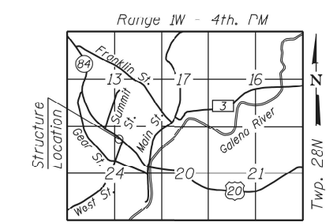

LOCATION SKETCH

CURVE DATA

Prop. Curve 71260
P.I. Sta. = 1220+77.60
Δ = 18° 06' 22" (LT)
D = 4° 35' 01"
R = 1,250.00'
T = 199.17'
L = 395.02'
E = 15.77'
P.C. Sta. = 1218+78.43
P.T. Sta. = 1222+73.44

DESIGN STRESSES

FIELD UNITS

f'c = 3,500 psi
fy = 60,000 psi (Reinforcement)
fy = 50,000 psi (M270 Grade 50)

DESIGN SPECIFICATIONS

2017 AASHTO LRFD Bridge Design Specifications, 8th Edition

APPROVED
For Structural Adequacy Only
Engineer of Bridges & Structures

LICENSED STRUCTURAL ENGINEER
VINCENT P. TABOR
081-007047
STATE OF ILLINOIS

Vincent P. Tabor 10/14/2021

Vincent P. Tabor — Date
Licensed Structural Engineer
State of Illinois No. 081-007047
Expires 11/30/2022

GENERAL PLAN & ELEVATION
IL 84/U.S. ROUTE 20
F.A.P. RTE. 301 - SEC. 29R-1
JO DAVIESS COUNTY
STATION 1217+17.26 TO 1219+45.03
STRUCTURE NO. 043-7010

LIN ENGINEERING, LTD. Consulting Engineers Springfield, Illinois	USER NAME = LIN06-PC	DESIGNED - AML	REVISED -	STATE OF ILLINOIS DEPARTMENT OF TRANSPORTATION
		CHECKED - VPT	REVISED -	
	PLOT TIME = 12:50:06 PM	DRAWN - AML	REVISED -	
	PLOT DATE = 10/14/2021	CHECKED - VPT	REVISED -	

GENERAL PLAN AND ELEVATION
S.N. 043-7010
SHEET 1 OF 13 SHEETS

F.A.P. RTE.	SECTION	COUNTY	TOTAL SHEETS	SHEET NO.
301	29R-1	JO DAVIESS	679	318
		CONTRACT NO. 64880		
		ILLINOIS FED. AID PROJECT		

MODEL: GPE
FILE NAME: E:\1019\StructWall Hi4. Final Design\Design Plans\CADD_Sheets\0437010-D264880-001-GPE.dgn
10/14/2021 12:50:06 PM

SUGGESTED SEQUENCE OF CONSTRUCTION

1. Complete Structure Excavation to the top of Soldier Piles.
2. Drill shaft excavations for Soldier Piles to specified tip elevations, maintaining required tolerances and hole stability.
3. Remove loose material and excess water from excavated shafts, and set Soldier Pile in hole, using temporary bracing to maintain correct elevation, clearances, and position during and after placement of concrete.
4. Place encasement concrete around Soldier Pile to the level of the base of the proposed Concrete Facing.
5. Place Controlled Low Strength Material (C.L.S.M.) around Soldier Pile to the top of the ground surface.
6. Excavate the soil in front of the wall to proposed grade, with simultaneous removal of C.L.S.M. at the face of the Soldier Piles and placement of lagging as required.
7. Construct wall drainage features, including underdrain at the base of wall.
8. Place Shear Studs on Soldier Piles and construct concrete facing.
9. Complete final grading at the base and top of the wall.

STATION 1217+17
TO STATION 1219+45
BUILT BY
STATE OF ILLINOIS
F.A.P. RTE. 301 SEC. 29R-1
STR. NO. 043-7010

NAME PLATE

See Std. 515001

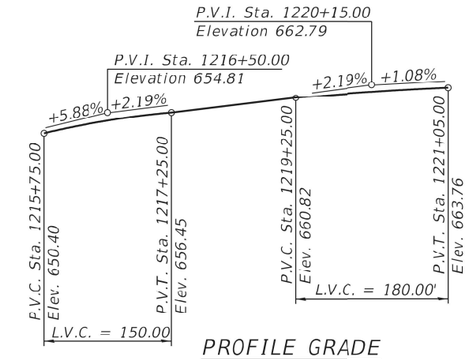

PROFILE GRADE

(Along Proposed ℄ IL 84/U.S. Rte. 20)

TOTAL BILL OF MATERIAL

ITEM	UNIT	TOTAL
Structure Excavation	Cu. Yd.	35
Rock Excavation for Structures	Cu. Yd.	145
Protective Coat	Sq. Yd.	347
Stud Shear Connectors	Each	658
Reinforcement Bars, Epoxy Coated	Pound	12,770
Name Plates	Each	1
Furnishing Soldier Piles (W Section)	Foot	612
Drilling and Setting Soldier Piles (In Soil)	Cu. Ft.	215
Drilling and Setting Soldier Piles (In Rock)	Cu. Ft.	2,375
Untreated Timber Lagging	Sq. Ft.	1,935
Concrete Structures	Cu. Yd.	118.3
Geocomposite Wall Drain	Sq. Yd.	152
Form Liner Textured Surface, Special	Sq. Ft.	2,557
Staining Concrete Structures	Sq. Ft.	2,557
Pipe Handrail, Special	Foot	227.5
Pipe Underdrains for Structures 4"	Foot	230

GENERAL NOTES

1. Reinforcement Bars designated (E) shall be Epoxy Coated.
2. All exposed concrete edges shall have a ¾" X 45° chamfer, except where shown otherwise. Chamfer on vertical edges shall be continued a minimum of one foot below finished ground level.
3. Reinforcement Bar bending dimensions are out to out.
4. No field welding is permitted except as specified in the contract documents.
5. No construction joints except those shown on the plans will be allowed unless approved by the engineer.
6. It shall be the contractor's responsibility to verify the location of all utilities prior to starting construction. Contact J.U.L.I.E., 800-892-0123.
7. The Contractor shall use care when excavating around existing foundations, retaining walls, and other structures. Any damage to the existing structure and/or supporting foundation shall be repaired or replaced at the Contractor's expense.
8. The Contractor is responsible for the design and performance of the lagging using no less than a 3 in. nominal rough-sawn thickness and timber with a minimum allowable bending stress of 1000 psi.
9. Construction vibration monitoring shall be performed in accordance with the contract Special Provisions.
10. Apply protective coat to exposed surface of back face of the Concrete Facing, and to the entire top and front face surfaces of the Concrete Facing.

TYPICAL CONTROL POINT LOCATION

PANEL	C.P. NO.	STATION	OFFSET
1	1	1217+17.26	45.02 Lt.
2	2	1217+33.16	35.00 Lt.
3	3	1217+63.16	35.00 Lt.
4	4	1217+93.16	35.00 Lt.
5	5	1218+23.16	35.00 Lt.
6	6	1218+53.16	35.00 Lt.
7	7	1218+83.30	35.00 Lt.
8	8	1219+14.16	35.00 Lt.
	9	1219+45.03	35.00 Lt.

Stations and offsets are measured from Proposed ℄ IL 84/U.S. Rte. 20 to Front Face of Wall.

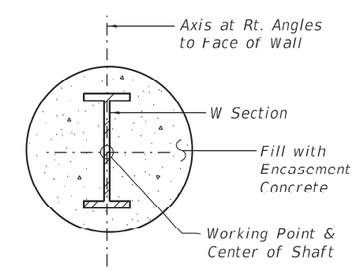

SECTION THRU ENCASEMENT

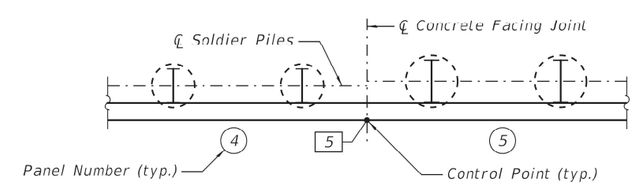

LEGEND

Panel Number (X)
Control Point [X]
Pile Number (XX)

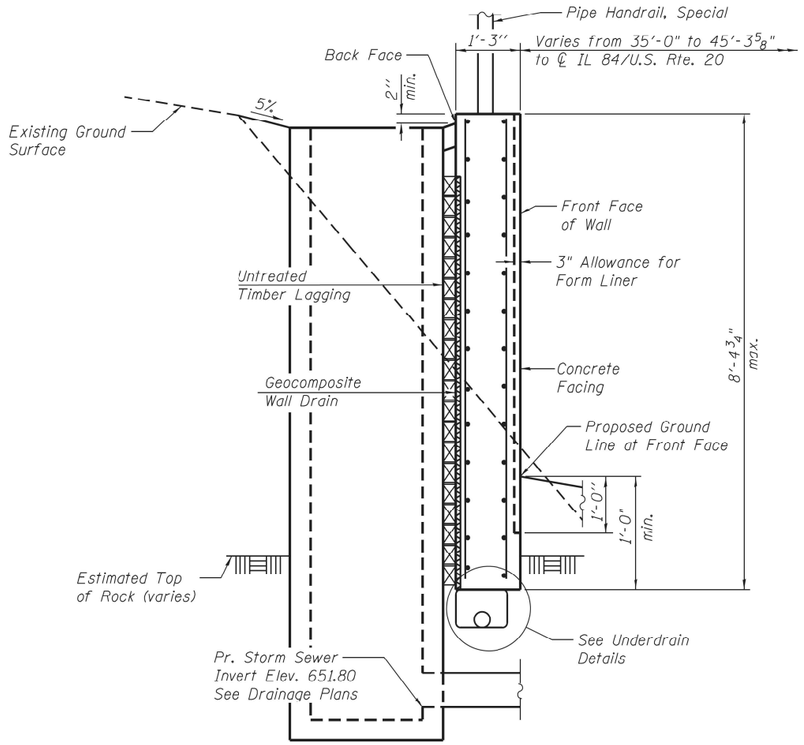

SECTION THRU ACCESS HOLE SHOWING UNDERDRAIN

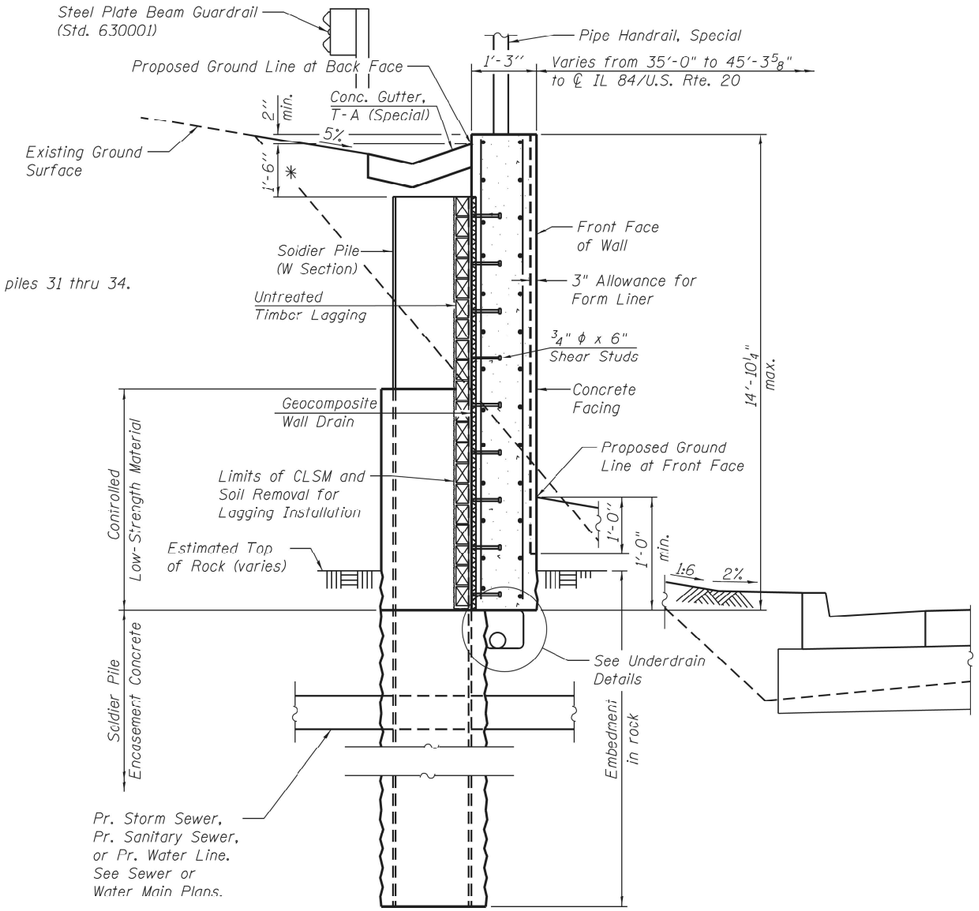

* 1'-0" for piles 31 thru 34.

SECTION THRU SOLDIER PILE WALL

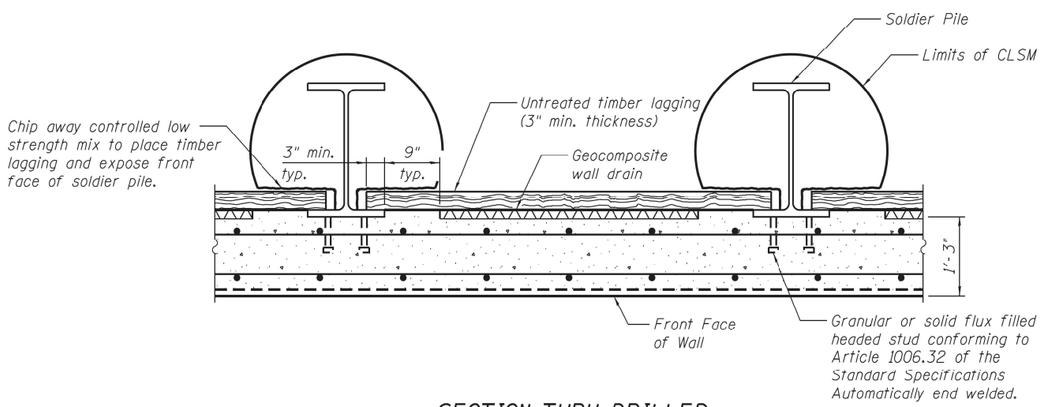

SECTION THRU DRILLED SOLDIER PILE WALL

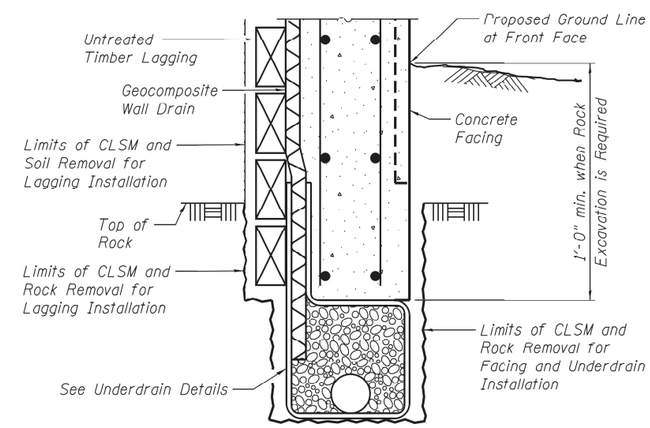

PARTIAL SECTION THRU SOLDIER PILE WALL WHEN ROCK EXCAVATION IS REQUIRED

MODEL: Typical Sections
FILE NAME: E:\0181\StructWall H14. Final Design\Design Plans\CADD_Sheets\0437010-D2648800-003-Typ Sections.dgn

LIN ENGINEERING, LTD. Consulting Engineers Springfield, Illinois	USER NAME = LIN06-PC	DESIGNED - AML	REVISED -	STATE OF ILLINOIS DEPARTMENT OF TRANSPORTATION	TYPICAL SECTIONS S.N. 043-7010	F.A.P. RTE.	SECTION	COUNTY	TOTAL SHEETS / SHEET NO.
		CHECKED - VPT	REVISED -			301	29R-1	JO DAVIESS	679 / 320
	PLOT TIME = 12:50:08 PM	DRAWN - AML	REVISED -					CONTRACT NO. 64880	
	PLOT DATE = 10/14/2021	CHECKED - VPT	REVISED -		SHEET 3 OF 13 SHEETS		ILLINOIS	FED. AID PROJECT	

10/14/2021 12:50:08 PM

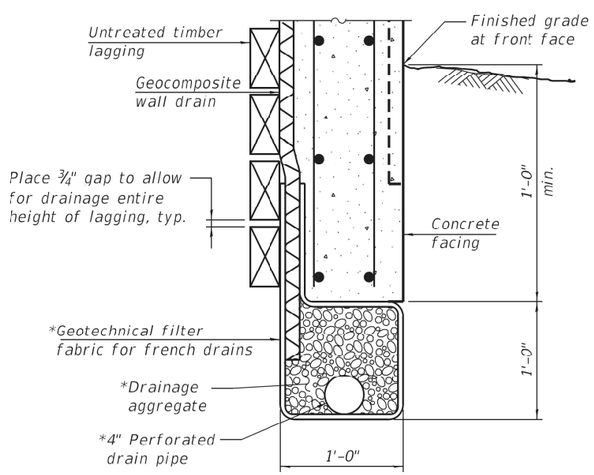

BETWEEN SOLDIER PILES

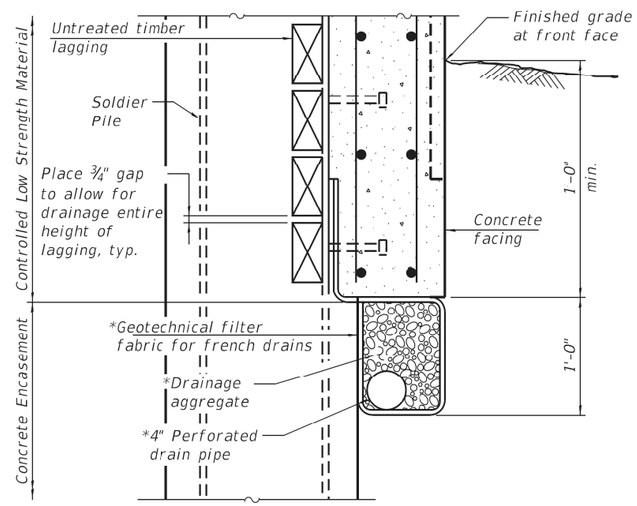

AT SOLDIER PILES

UNDERDRAIN DETAIL FOR SOLDIER PILE WALLS

*Included in the cost of Pipe Underdrains for Structures 4".

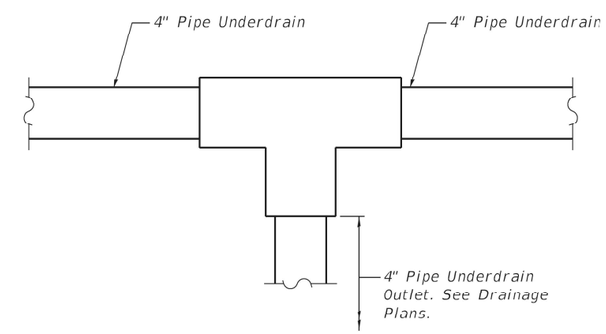

PIPE UNDERDRAIN OUTLET

See Sheet 1 of 13 for outlet locations.

MODEL: Default
FILE NAME: E:\01B\Struct\Wall H4. Final Design\Design Plans\CAD_Sheets\0437010-D294880-004-Drain Details.dgn

LIN ENGINEERING, LTD. Consulting Engineers Springfield, Illinois	USER NAME = LIN06-PC	DESIGNED - AML	REVISED -	STATE OF ILLINOIS DEPARTMENT OF TRANSPORTATION	DRAIN DETAILS S.N. 043-7010	F.A.P. RTE.	SECTION	COUNTY	TOTAL SHEETS / SHEET NO.
		CHECKED - VPT	REVISED -			301	29R-1	JO DAVIESS	679 / 321
	PLOT TIME = 12:50:09 PM	DRAWN - AML	REVISED -					CONTRACT NO. 64880	
	PLOT DATE = 10/14/2021	CHECKED - VPT	REVISED -		SHEET 4 OF 13 SHEETS		ILLINOIS	FED. AID PROJECT	

10/14/2021 12:50:09 PM

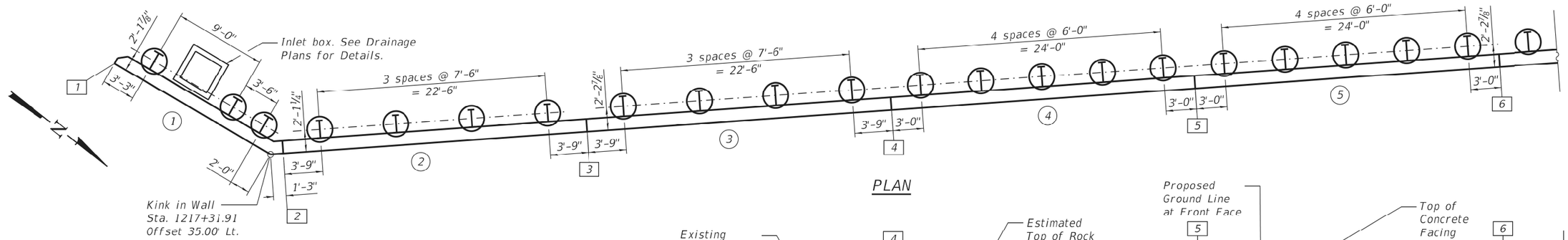

PLAN

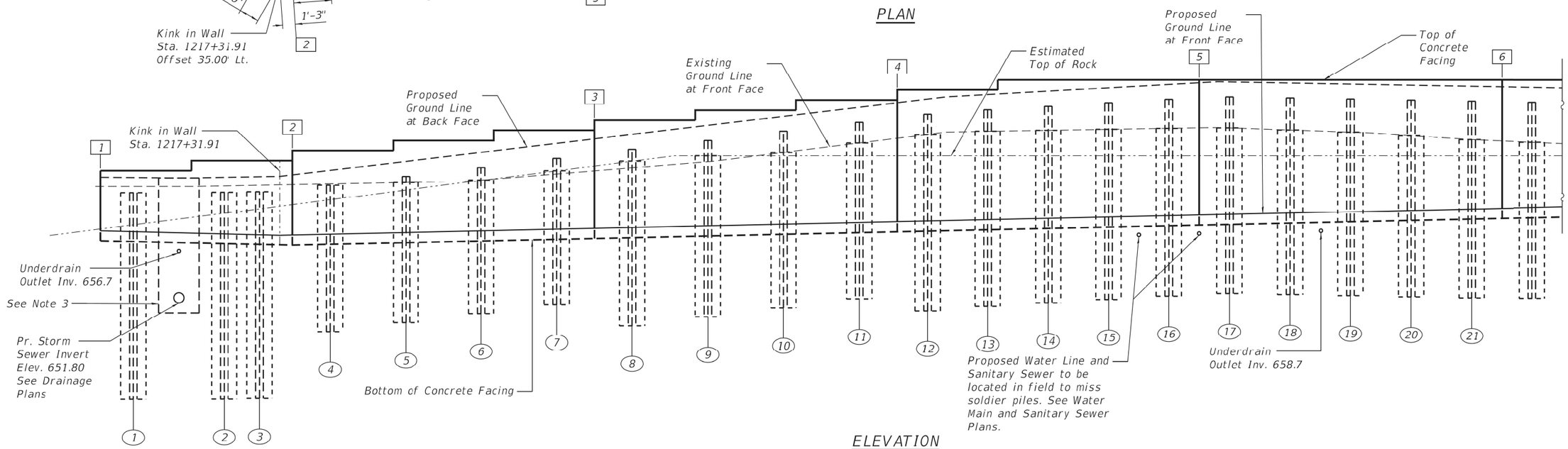

ELEVATION

(Looking at Front Face of Wall)

SOLDIER PILE SUMMARY

Panel	Pile No.	Station	Offset to Working Point (ft)	Pile Size	Shaft Diameter (ft)	Top of Soldier Pile Elevation	Pile Tip Elevation	Estimated Length of Soldier Pile	Top of Encasement Concrete	Est. Top of Rock Elevation	Number of Shear Connectors
1	1	1217+21.16	44.96 Lt.	W21x122	2.50	662.73	642.23	20.50 ft	657.84	659.52	12
	2	1217+28.59	39.88 Lt.	W21x122	2.50	662.75	642.25	20.50 ft	657.62	660.67	12
	3	1217+31.48	37.91 Lt.	W21x122	2.50	662.81	642.31	20.50 ft	657.53	661.12	12
2	4	1217+36.91	37.11 Lt.	W21x48	2.50	663.45	648.95	14.50 ft	657.59	662.02	14
	5	1217+44.41	37.11 Lt.	W21x48	2.50	664.34	649.84	14.50 ft	657.76	662.98	14
	6	1217+51.91	37.11 Lt.	W21x48	2.50	665.23	650.73	14.50 ft	657.92	663.94	16
	7	1217+59.41	37.11 Lt.	W21x48	2.50	666.12	651.62	14.50 ft	658.09	664.90	18
3	8	1217+66.91	37.24 Lt.	W24x68	2.50	667.02	649.52	17.50 ft	658.25	665.86	20
	9	1217+74.41	37.24 Lt.	W24x68	2.50	667.91	650.41	17.50 ft	658.42	666.40	20
	10	1217+81.91	37.24 Lt.	W24x68	2.50	668.80	651.30	17.50 ft	658.59	666.40	22
	11	1217+89.41	37.24 Lt.	W24x68	2.50	669.70	652.20	17.50 ft	658.75	666.40	24
4	12	1217+96.16	37.24 Lt.	W24x68	2.50	670.50	651.00	19.50 ft	658.90	666.40	24
	13	1218+02.16	37.24 Lt.	W24x68	2.50	670.95	651.45	19.50 ft	659.03	666.40	26
	14	1218+08.16	37.24 Lt.	W24x68	2.50	671.29	651.79	19.50 ft	659.17	666.40	26
	15	1218+14.16	37.24 Lt.	W24x68	2.50	671.63	652.13	19.50 ft	659.30	666.40	26
	16	1218+20.16	37.24 Lt.	W24x68	2.50	671.97	652.47	19.50 ft	659.43	666.40	26
5	17	1218+26.16	37.24 Lt.	W24x68	2.50	672.22	652.72	19.50 ft	659.56	666.40	26
	18	1218+32.16	37.24 Lt.	W24x68	2.50	672.11	652.61	19.50 ft	659.70	666.40	26
	19	1218+38.16	37.24 Lt.	W24x68	2.50	672.00	652.50	19.50 ft	659.83	666.40	26
	20	1218+44.16	37.24 Lt.	W24x68	2.50	671.90	652.40	19.50 ft	659.96	666.40	26
	21	1218+50.16	37.24 Lt.	W24x68	2.50	671.79	652.29	19.50 ft	660.09	666.40	24

Notes:

1. Rock Elevations at each pile are estimated by interpolating between rock elevations provided in soil boring logs and rock probes.
2. Stations and offsets are measured from ℄ IL 84/U.S. Rte. 20.
3. Any voids in the rock left between the inlet box located behind Panel 1 and the adjacent soldier piles, below the level of the wall drain, shall be filled with the same material as used for the Soldier Pile Encasement Concrete. Cost included in Drilling and Setting Soldier Piles (In Rock).

LEGEND

Panel Number (X)

Control Point [X]

Pile Number (XX)

MODEL: Default
FILE NAME: E:\1013\Struct\Wall H14, Final Design\Design Plans\CADD_Sheets\0437010-D264880-005-Piles 1.dgn

10/14/2021 12:50:12 PM

LIN ENGINEERING, LTD.
Consulting Engineers
Springfield, Illinois

USER NAME = LIN06-PC	DESIGNED - AML	REVISED -	
	CHECKED - VPT	REVISED -	
PLOT TIME = 12:50:12 PM	DRAWN - AML	REVISED -	
PLOT DATE = 10/14/2021	CHECKED - VPT	REVISED -	

STATE OF ILLINOIS
DEPARTMENT OF TRANSPORTATION

SOLDIER PILES
S.N. 043-7010

SHEET 5 OF 13 SHEETS

F.A.P. RTE.	SECTION	COUNTY	TOTAL SHEETS	SHEET NO.
301	29R-1	JO DAVIESS	679	322
		CONTRACT NO. 64880		
		ILLINOIS	FED. AID PROJECT	

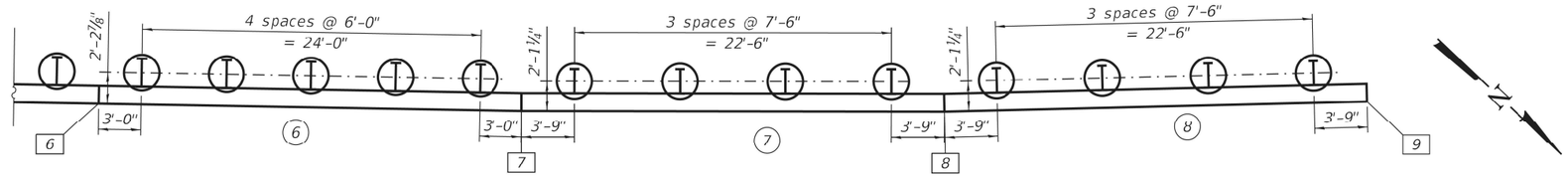

PLAN

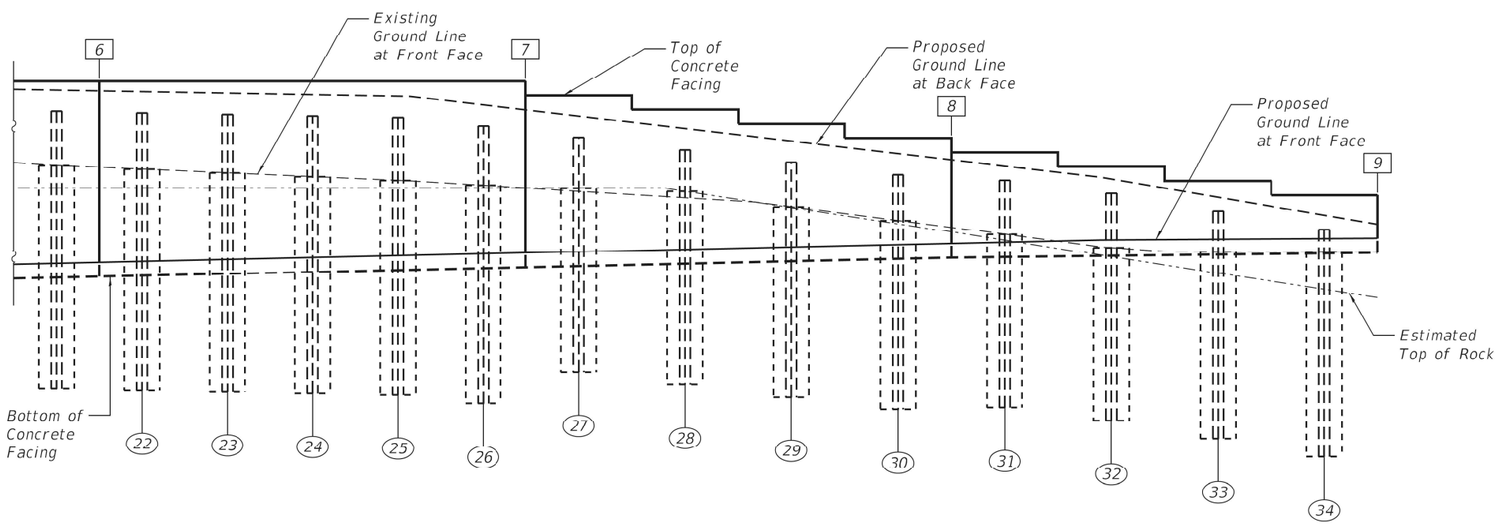

ELEVATION

(Looking at Front Face of Wall)

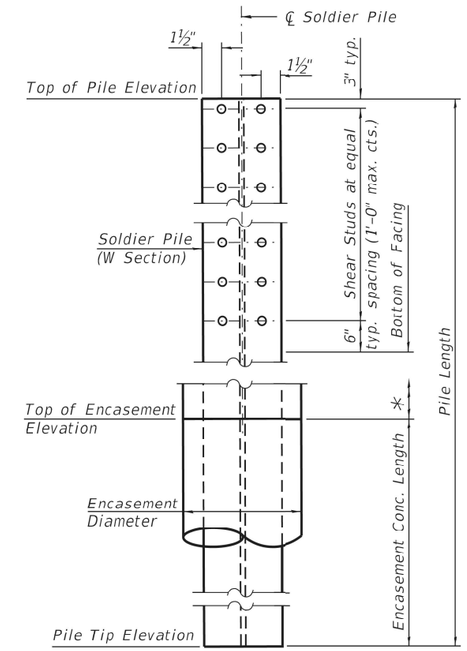

SOLDIER PILE ELEVATION AND
SHEAR STUD CONNECTION DETAILS

* Controlled Low-Strength Material

SOLDIER PILE SUMMARY

Panel	Pile No.	Station	Offset to Working Point (ft)	Pile Size	Shaft Diameter (ft)	Top of Soldier Pile Elevation	Pile Tip Elevation	Estimated Length of Soldier Pile	Top of Encasement Concrete	Est. Top of Rock Elevation	Number of Shear Connectors
6	22	1218+56.16	37.24 Lt.	W24x68	2.50	671.68	652.18	19.50 ft	660.23	666.40	24
	23	1218+62.16	37.24 Lt.	W24x68	2.50	671.57	652.07	19.50 ft	660.36	666.40	24
	24	1218+68.16	37.24 Lt.	W24x68	2.50	671.46	651.96	19.50 ft	660.49	666.40	24
	25	1218+74.16	37.24 Lt.	W24x68	2.50	671.36	651.86	19.50 ft	660.62	666.40	22
	26	1218+80.22	37.24 Lt.	W24x68	2.50	670.74	651.24	19.50 ft	660.76	666.40	22
7	27	1218+87.14	37.15 Lt.	W21x48	2.50	669.95	653.45	16.50 ft	660.91	666.40	20
	28	1218+94.87	37.20 Lt.	W21x48	2.50	669.08	652.58	16.50 ft	661.07	666.18	18
	29	1219+02.60	37.20 Lt.	W21x48	2.50	668.20	651.70	16.50 ft	661.24	665.03	16
	30	1219+10.33	37.15 Lt.	W21x48	2.50	667.33	650.83	16.50 ft	661.40	663.87	14
8	31	1219+18.00	37.15 Lt.	W21x48	2.50	666.95	650.95	16.00 ft	661.57	662.72	12
	32	1219+25.73	37.20 Lt.	W21x48	2.50	666.04	650.04	16.00 ft	661.72	661.56	10
	33	1219+33.46	37.20 Lt.	W21x48	2.50	664.76	648.76	16.00 ft	661.77	660.41	8
	34	1219+41.19	37.15 Lt.	W21x48	2.50	663.49	647.49	16.00 ft	661.82	659.25	4

Notes:

1. Rock Elevations at each pile are estimated by interpolating between rock elevations provided in soil boring logs and rock probes.
2. Stations and offsets are measured from ℄ IL 84/U.S. Rte. 20.

LEGEND

Panel Number (X)
Control Point [X]
Pile Number (XX)

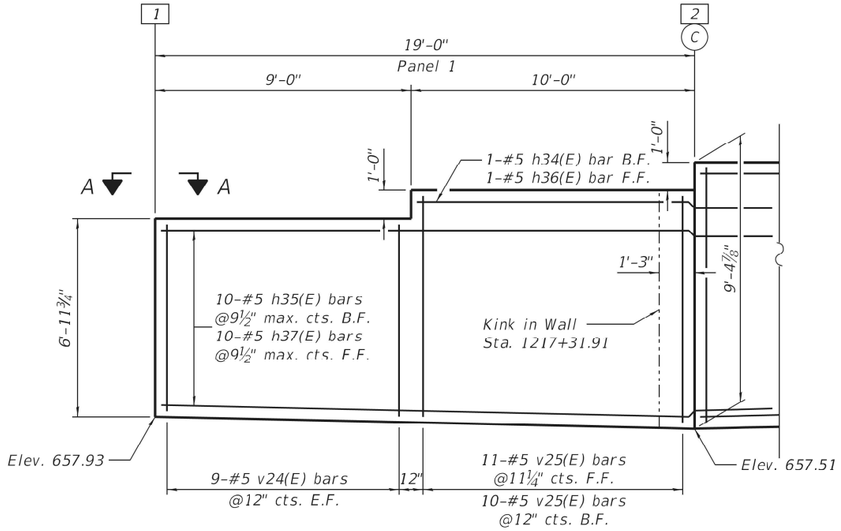

ELEVATION

Concrete Facing Panel 1
(Looking at Front Face of Wall)

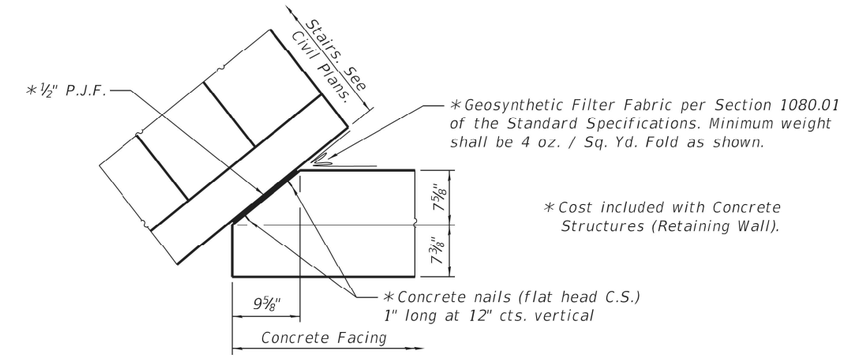

VIEW A-A

Interface at Stair Side Wall

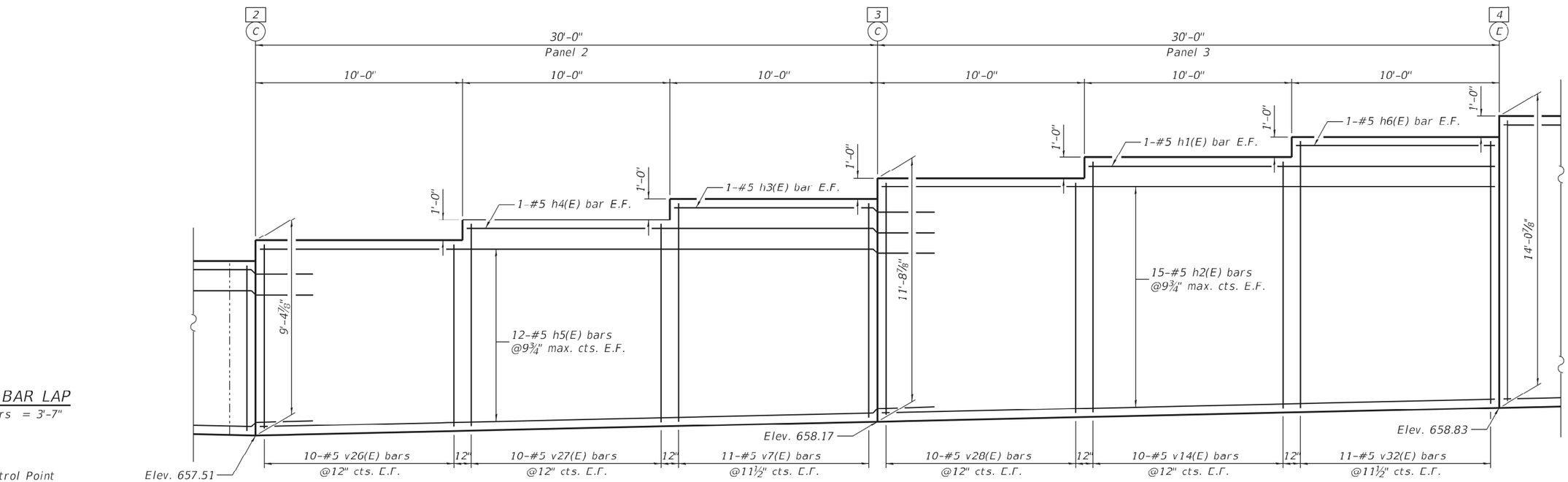

MIN. BAR LAP

#5 bars = 3'-7"

X Control Point
C Construction Joint
E Expansion Joint
B.F. Back Face
E.F. Each Face
F.F. Front Face

ELEVATION

Concrete Facing Panels 2 & 3
(Looking at Front Face of Wall)

MODEL: Default
FILE NAME: E:\0181Struct\Wall H14. Final Design\Design Plans\CAD_Sheets\0437010-D2564880-007-Facing 1.dgn

LIN ENGINEERING, LTD.
Consulting Engineers
Springfield, Illinois

USER NAME = LIN06-PC	DESIGNED - AML	REVISED -	
	CHECKED - VPT	REVISED -	
PLOT TIME = 12:50:14 PM	DRAWN - AML	REVISED -	
PLOT DATE = 10/14/2021	CHECKED - VPT	REVISED -	

STATE OF ILLINOIS
DEPARTMENT OF TRANSPORTATION

CONCRETE FACING
S.N. 043-7010

SHEET 7 OF 13 SHEETS

F.A.P. RTE.	SECTION	COUNTY	TOTAL SHEETS	SHEET NO.
301	29R-1	JO DAVIESS	679	324
		CONTRACT NO. 64880		
		ILLINOIS	FED. AID PROJECT	

10/14/2021 12:50:14 PM

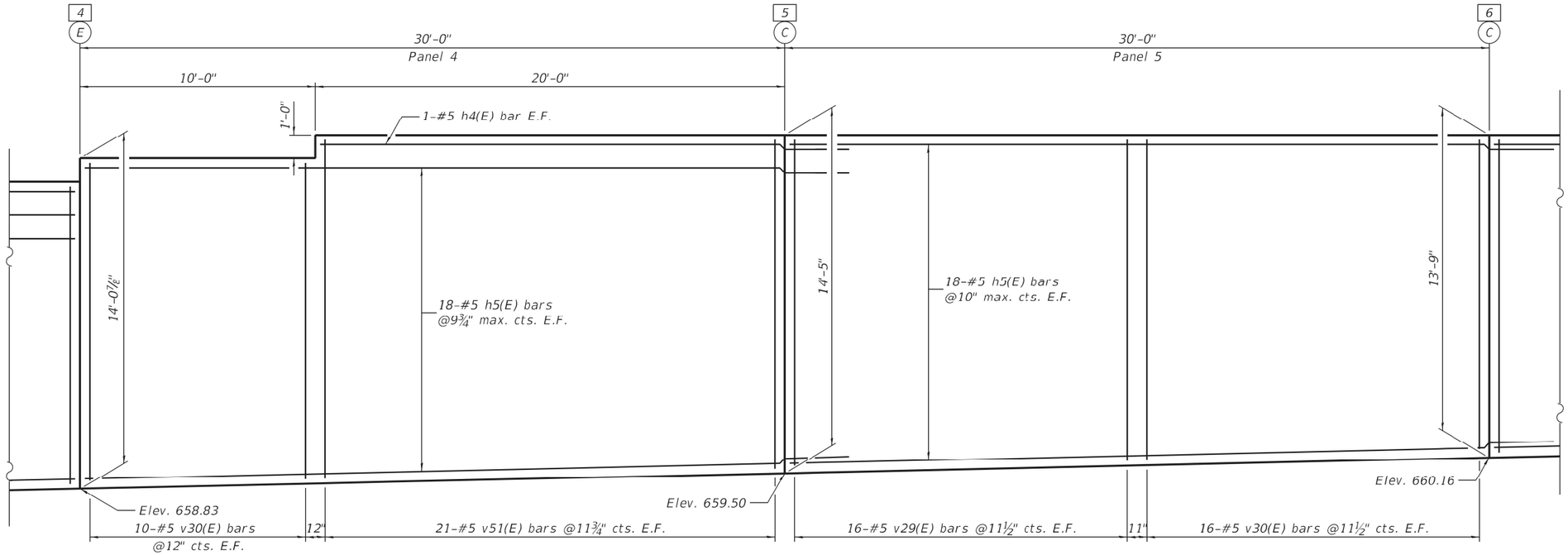

ELEVATION

Concrete Facing Panels 4 & 5
(Looking at Front Face of Wall)

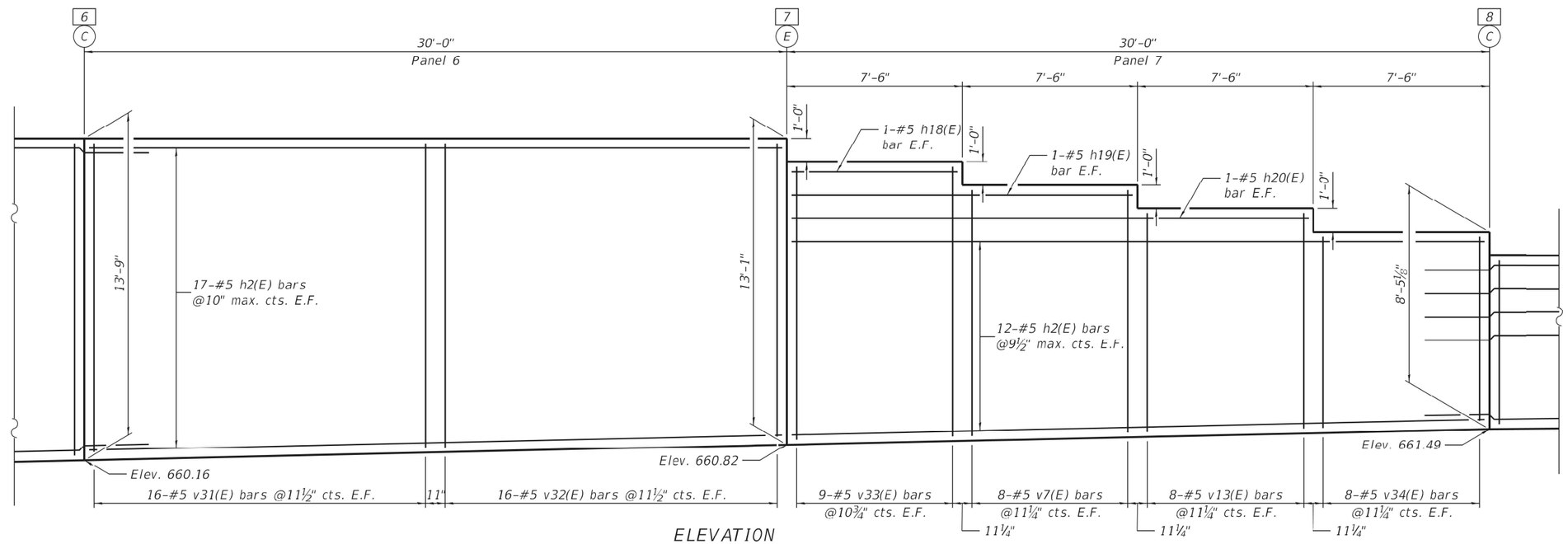

ELEVATION

Concrete Facing Panels 6 & 7
(Looking at Front Face of Wall)

MIN. BAR LAP

#5 bars = 3'-7"

X	Control Point
C	Construction Joint
E	Expansion Joint
B.F.	Back Face
E.F.	Each Face
F.F.	Front Face

MODEL: Default
FILE NAME: E:\01B\StructWall H4. Final Design\Design Plans\CAD_Sheets\0437010-D294880-008-Facing 2.dgn

LIN ENGINEERING, LTD.
Consulting Engineers
Springfield, Illinois

USER NAME = LIN06-PC	DESIGNED - AML	REVISED -	
	CHECKED - VPT	REVISED -	
PLOT TIME = 12:50:15 PM	DRAWN - AML	REVISED -	
PLOT DATE = 10/14/2021	CHECKED - VPT	REVISED -	

STATE OF ILLINOIS
DEPARTMENT OF TRANSPORTATION

CONCRETE FACING
S.N. 043-7010

SHEET 8 OF 13 SHEETS

F.A.P. RTE.	SECTION	COUNTY	TOTAL SHEETS	SHEET NO.
301	29R-1	JO DAVIESS	679	325
		CONTRACT NO. 64880		
		ILLINOIS	FED. AID PROJECT	

10/14/2021 12:50:15 PM

MIN. BAR LAP

#5 bars = 3'-7"

- X Control Point
- C Construction Joint
- E Expansion Joint

B.F. Back Face
E.F. Each Face
F.F. Front Face

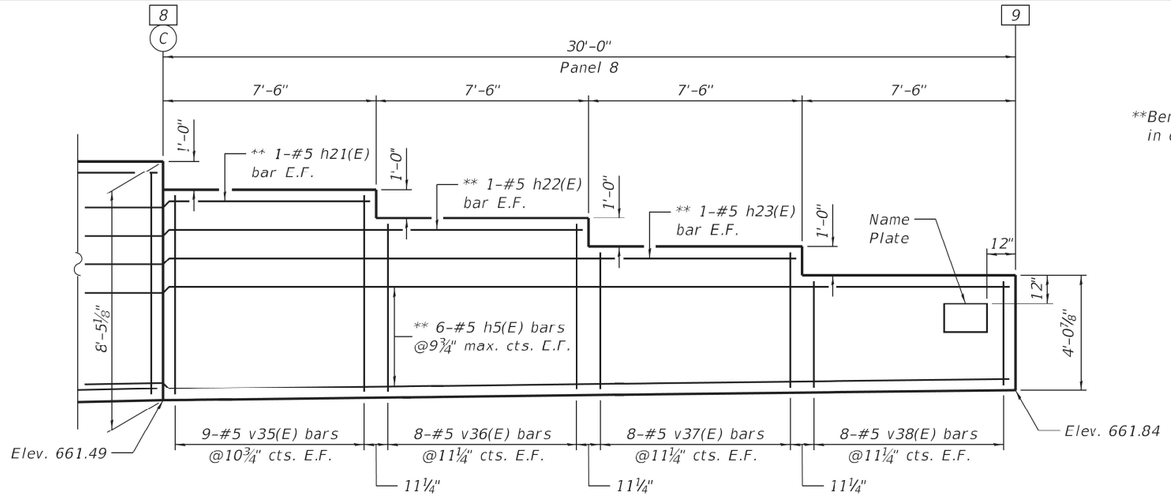

**Bend bars in Front Face at joint in field in order to provide minimum clear cover.

ELEVATION

Concrete Facing Panel 8
(Looking at Front Face of Wall)

BILL OF MATERIAL

Bar	No.	Size	Length	Shape
h1(E)	2	#5	19'-8"	
h2(E)	88	#5	29'-8"	
h3(E)	2	#5	13'-7"	
h4(E)	4	#5	23'-7"	
h5(E)	108	#5	33'-8"	
h6(E)	2	#5	9'-8"	
h18(E)	2	#5	7'-2"	
h19(E)	2	#5	14'-8"	
h20(E)	2	#5	22'-2"	
h21(E)	2	#5	11'-1"	
h22(E)	2	#5	18'-7"	
h23(E)	2	#5	26'-1"	
h34(E)	1	#5	13'-0"	
h35(E)	10	#5	21'-4"	
h36(E)	1	#5	13'-4"	
h37(E)	10	#5	22'-4"	
v7(E)	38	#5	10'-3"	
v13(E)	16	#5	9'-2"	
v14(E)	20	#5	11'-10"	
v24(E)	18	#5	6'-6"	
v25(E)	21	#5	7'-9"	
v26(E)	20	#5	8'-9"	
v27(E)	20	#5	9' 6"	
v28(E)	20	#5	11'-1"	
v29(E)	32	#5	13'-8"	
v30(E)	52	#5	13'-4"	
v31(E)	32	#5	13'-0"	
v32(E)	54	#5	12'-8"	
v33(E)	18	#5	11'-6"	
v34(E)	16	#5	8'-0"	
v35(E)	18	#5	6'-11"	
v36(E)	16	#5	5'-10"	
v37(E)	16	#5	4'-9"	
v38(E)	16	#5	3'-8"	
v51(E)	42	#5	14'-0"	
Concrete Structures			Cu. Yd.	118.3
Reinforcement Bars, Epoxy Coated			Pound	12,770

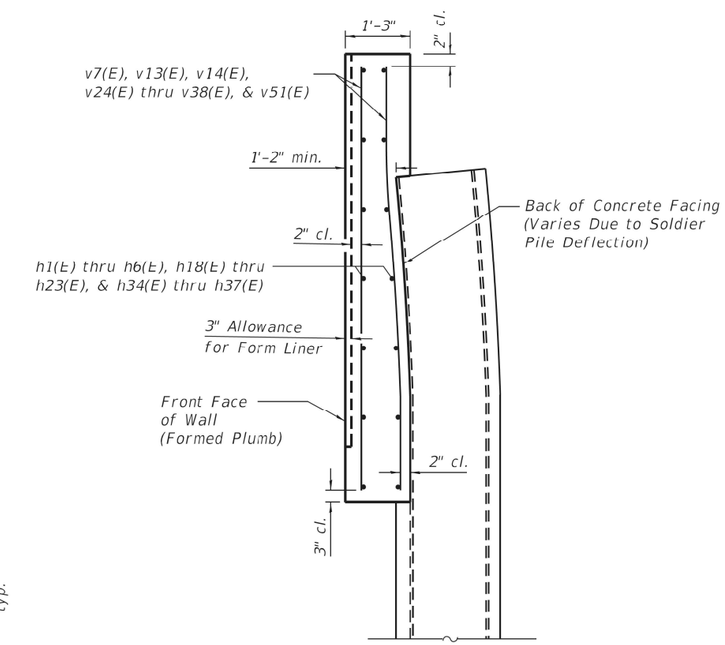

DEFLECTED PILE SECTION THRU FACING

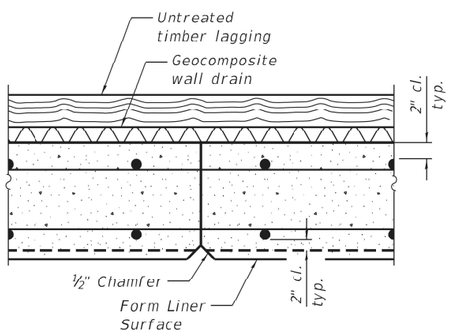

CONSTRUCTION JOINT

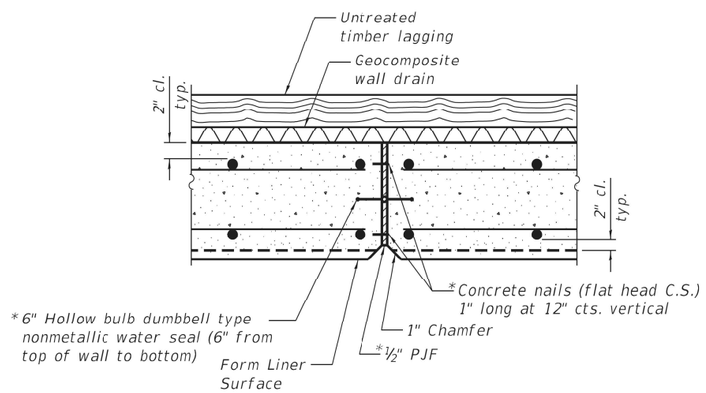

EXPANSION JOINT

* Cost included with Concrete Structures

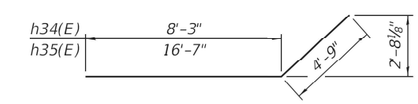

Bars h34(E) & h35(E)

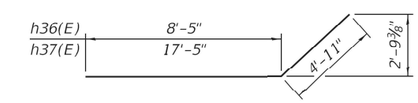

Bars h36(E) & h37(E)

Note:

Form liner to be customrock pattern #1206, Royalite Stone, or SHPO approved equivalent. See Special Provision for Form Liner Textured Surface, Special.

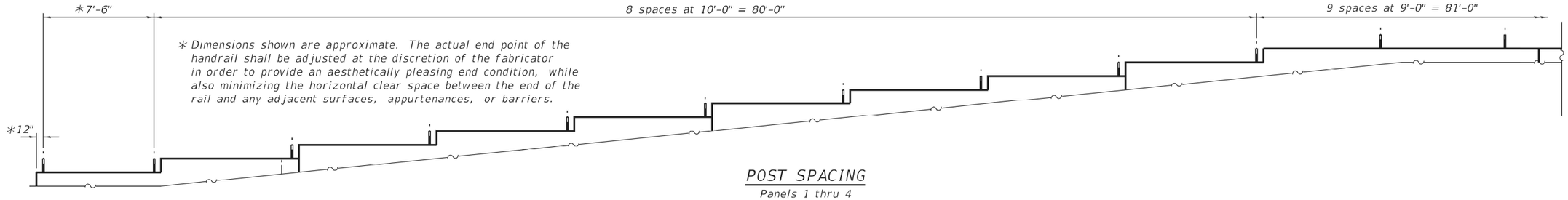

* Dimensions shown are approximate. The actual end point of the handrail shall be adjusted at the discretion of the fabricator in order to provide an aesthetically pleasing end condition, while also minimizing the horizontal clear space between the end of the rail and any adjacent surfaces, appurtenances, or barriers.

POST SPACING
Panels 1 thru 4

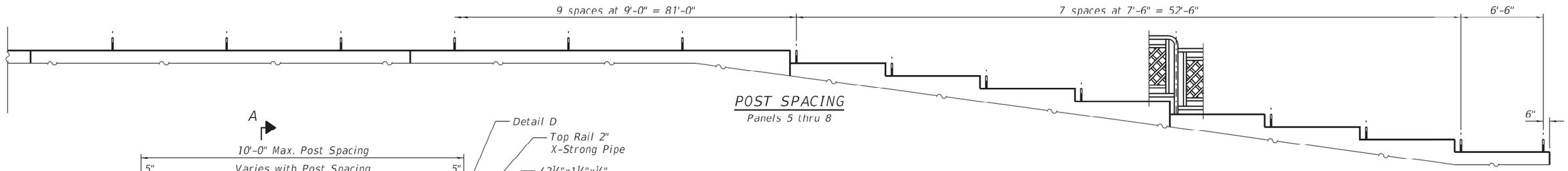

POST SPACING
Panels 5 thru 8

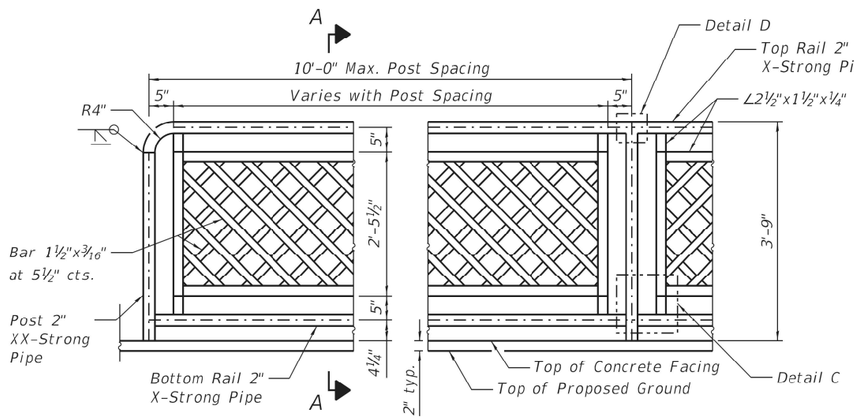

ELEVATION - PIPE HANDRAIL, SPECIAL

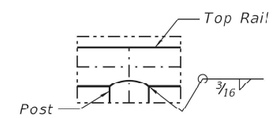

DETAIL D

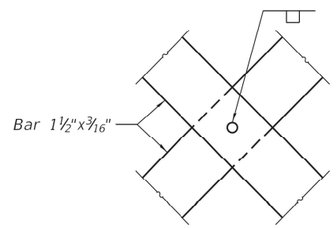

VIEW B-B

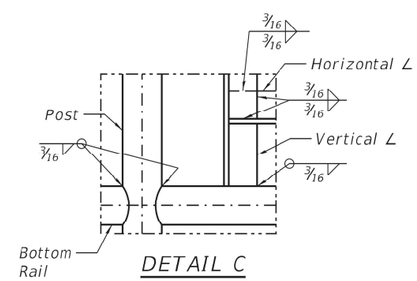

DETAIL C

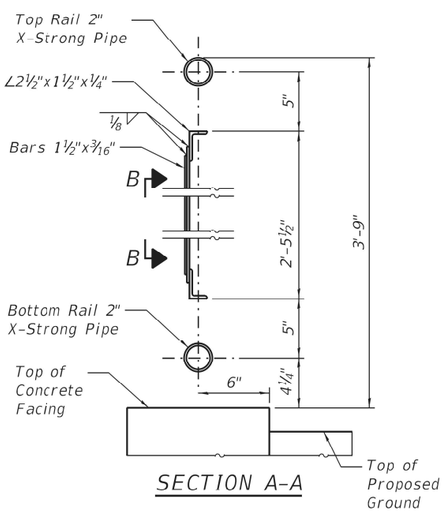

SECTION A-A

Core 3" ∅ Max. hole, 9" deep in top of concrete facing. Minimum core diameter shall allow adequate distribution of epoxy around embedded post in accordance with the epoxy manufacturer's specifications. Set post into cored hole and epoxy grout in place according to Article 584 of the Standard Specifications.

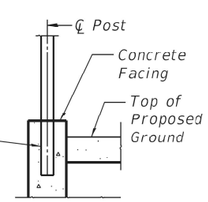

CONCRETE FACING ATTACHMENT

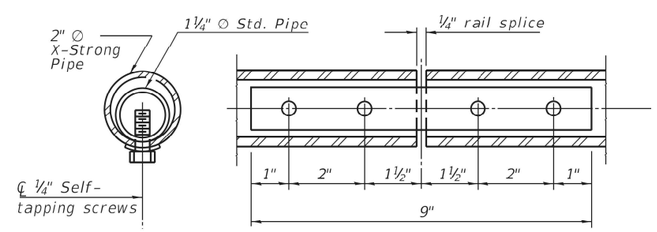

RAIL SPLICE

Notes:

Gripping surfaces shall be uninterrupted by posts, other construction elements, or obstructions.

Ends of handrail shall be rounded.

Handrail shall not rotate within their fittings.

Handrail shall conform to Section 509 of the Standard Specifications, with the exception that all pipe and connections shall be welded, galvanized or aluminum, according to Article 1006.30 or 1006.34.

All posts, railing, splices, anchor devices, and plates shall be painted black using the Inorganic Zinc Rich Primer / Acrylic / Acrylic System for shop and field painting of new structural steel.

Fasteners shall be mechanically galvanized in painted areas.

Post spacing shown may be adjusted at the discretion of the fabricator in order to provide an aesthetically pleasing and cost effective design. Spacing of posts shall not exceed 10'-0".

Posts and vertical bars shall be fabricated to be plumb when installed on the retaining wall. Angle the horizontal rails as necessary to follow the vertical profile of the top of retaining wall.

Costs of coring and epoxy grout for concrete facing attachment shall be included in the cost of Pipe Handrail, Special.

The Contractor shall be responsible for field verification of all horizontal and vertical retaining wall geometry and joints prior to fabrication of the handrail.

Handrail shall satisfy the loading requirements of Section 13.8.2 of the 2017 AASHTO LRFD Bridge Design Specifications, 8th Edition for Pedestrian Railing.

Member sizes shown are for estimating purposes only. The Contractor shall provide design calculations sealed by a Structural Engineer licensed in the State of Illinois with the actual member sizes used for fabrication.

Clear space between elements of the railing shall not allow the passage of a sphere greater than 4" in diameter.

This work shall consist of designing, furnishing, galvanizing, painting, and erecting handrails as listed above and according to these plans. This work shall be paid for at the contract unit price per FOOT for PIPE HANDRAIL, SPECIAL.

BILL OF MATERIAL

Item	Unit	Quantity
Pipe Handrail, Special	Foot	227.5

MODEL: Default
FILE NAME: E:\1019IStructWall H14. Final Design\Design Plans\CAJD_Sheets\0437010-D264880-010-Handrail.dgn

LIN ENGINEERING, LTD.
Consulting Engineers
Springfield, Illinois

USER NAME = LIN06-PC	DESIGNED - AML	REVISED -	
	CHECKED - VPT	REVISED -	
PLOT TIME = 12:50:17 PM	DRAWN - AML	REVISED -	
PLOT DATE = 10/14/2021	CHECKED - VPT	REVISED -	

STATE OF ILLINOIS
DEPARTMENT OF TRANSPORTATION

PIPE HANDRAIL, SPECIAL
S.N. 043-7010
SHEET 10 OF 13 SHEETS

F.A.P. RTE.	SECTION	COUNTY	TOTAL SHEETS	SHEET NO.
301	29R-1	JO DAVIESS	679	327
		CONTRACT NO. 64880		
	ILLINOIS	FED. AID PROJECT		

10/14/2021 12:50:17 PM

Illinois Department of Transportation
Division of Highways
Illinois Department of Transportation/D-2

SOIL BORING LOG

Page 1 of 1

Date 6/28/10

ROUTE FA 301 DESCRIPTION P92-088-92 Retaining Wall, West Street going N. 300' LOGGED BY W. Garza

SECTION 29X-T LOCATION W. Galena Twp. - 24 NE, SEC., TWP. 28N, RNG. 1W

COUNTY JoDaviess DRILLING METHOD Hollow Stem Auger HAMMER TYPE CME-45 Automatic

STRUCT. NO.
Station 1218+00

BORING NO. B-1b
Station 1218+27
Offset 44.00ft Lt CL
Ground Surface Elev. 670.40 ft

Surface Water Elev. ft
Stream Bed Elev. ft

Groundwater Elev.:
First Encounter ft
Upon Completion ft
After Hrs. ft

Description	Elev.	Depth (ft)	Blows (/6")	UCS Qu (tsf)	Moist (%)
STIFF tan LOAM with LIMESTONE fragments	668.40		4		
			7	1.3	18.0
			9	P	
DENSE tan weathered LIMESTONE	666.40	-5	64		
			17		
	664.40		21		
VERY DENSE tan weathered LIMESTONE			100/6"		
End of Boring	661.90	-10			
		-15			
		-20			

The Unconfined Compressive Strength (UCS) Failure Mode is indicated by (B-Bulge, S-Shear, P-Penetrometer)
The SPT (N value) is the sum of the last two blow values in each sampling zone (AASHTO T206)

BBS, from 137 (Rev. 8-99)

Illinois Department of Transportation
Division of Highways
Illinois Department of Transportation/D-2

SOIL BORING LOG

Page 1 of 1

Date 6/28/10

ROUTE FA 301 DESCRIPTION P92-088-92 Retaining Wall, West Street going N. 300' LOGGED BY W. Garza

SECTION 29X-T LOCATION W. Galena Twp. - 24NE, SEC., TWP. 28N, RNG. 1W

COUNTY JoDaviess DRILLING METHOD Hollow Stem Auger HAMMER TYPE CME-45 Automatic

STRUCT. NO.
Station 1219+00

BORING NO. B-2b
Station 1219+00
Offset 33.00ft Lt CL
Ground Surface Elev. 668.40 ft

Surface Water Elev. ft
Stream Bed Elev. ft

Groundwater Elev.:
First Encounter ft
Upon Completion ft
After Hrs. ft

Description	Elev.	Depth (ft)	Blows (/6")	UCS Qu (tsf)	Moist (%)
STIFF light brown SILTY CLAY LOAM				1.3	24.0
	666.40			P	
1st weathered LIMESTONE at 2'					
Refusal at 3.5'					
End of Boring	664.90				
		-5			
		-10			
		-15			
		-20			

The Unconfined Compressive Strength (UCS) Failure Mode is indicated by (B-Bulge, S-Shear, P-Penetrometer)
The SPT (N value) is the sum of the last two blow values in each sampling zone (AASHTO T206)

BBS, from 137 (Rev. 8-99)

Illinois Department of Transportation
Division of Highways
Illinois Department of Transportation/D-2

SOIL BORING LOG

Page 1 of 1

Date 6/28/10

ROUTE FA 301 DESCRIPTION P92-088-92 Retaining Wall, West Street going N. 300' LOGGED BY W. Garza

SECTION 29X-T LOCATION W. Galena Twp. - 24NE, SEC., TWP. 28N, RNG. 1W

COUNTY JoDaviess DRILLING METHOD Hollow Stem Auger HAMMER TYPE CME-45 Automatic

STRUCT. NO.
Station 1217+00

BORING NO. B-3b
Station 1216+69
Offset 34.00ft Lt CL
Ground Surface Elev. 656.80 ft

Surface Water Elev. ft
Stream Bed Elev. ft

Groundwater Elev.:
First Encounter ft
Upon Completion ft
After Hrs. ft

Description	Elev.	Depth (ft)	Blows (/6")	UCS Qu (tsf)	Moist (%)
SOFT brown SILTY CLAY LOAM				0.4	25.0
	655.30			P	
MEDIUM tan weathered LIMESTONE			4		
			6		
	653.30		8		
MEDIUM tan weathered LIMESTONE		-5	6		
			12		
	650.80		17		
MEDIUM tan weathered LIMESTONE			11		
			9		
	648.30		8		
VERY DENSE tan weathered LIMESTONE		-10	7		
			100/7"		
End of Boring	645.80				
		-15			
		-20			

The Unconfined Compressive Strength (UCS) Failure Mode is indicated by (B-Bulge, S-Shear, P-Penetrometer)
The SPT (N value) is the sum of the last two blow values in each sampling zone (AASHTO T206)

BBS, from 137 (Rev. 8-99)

MODEL: Default
FILE NAME: E:\1018\Struct\Wall H14. Final Design\Design Plans(CAD)_Sheets\0437010-D254880-011-Borings 1.dgn

LIN ENGINEERING, LTD. Consulting Engineers Springfield, Illinois	USER NAME = LIN06-PC	DESIGNED - AML	REVISED -	STATE OF ILLINOIS DEPARTMENT OF TRANSPORTATION	BORING LOGS S.N. 043-7010
		CHECKED - VPT	REVISED -		
	PLOT TIME = 12:50:18 PM	DRAWN - AML	REVISED -		SHEET 11 OF 13 SHEETS
	PLOT DATE = 10/14/2021	CHECKED - VPT	REVISED -		

F.A.P. RTE.	SECTION	COUNTY	TOTAL SHEETS	SHEET NO.
301	29R-1	JO DAVIESS	679	328
		CONTRACT NO. 64880		
		ILLINOIS FED. AID PROJECT		

10/14/2021 12:50:18 PM

Illinois Department of Transportation
Division of Highways
Illinois Department of Transportation/D-2

SOIL BORING LOG

Page 1 of 1

Date 3/22/07

ROUTE FA 301 DESCRIPTION P92-088-92 Retaining Wall, IL 84 in Galena LOGGED BY J. Strating

SECTION 29X-T LOCATION W. Galena Twp. - 13 NW, SEC. , TWP. 28N, RNG. 1W

COUNTY JoDaviess DRILLING METHOD Hollow Stem Auger HAMMER TYPE CME-45 Automatic

STRUCT. NO.
Station

BORING NO. B-6
Station 1216+75
Offset 33.00ft Lt CL
Ground Surface Elev. 657.00 ft

Surface Water Elev. ft
Stream Bed Elev. ft

Groundwater Elev.:
First Encounter ft
Upon Completion ft
After Hrs. ft

Description	Elev.	DEPTH (ft)	BLOWS (/6")	UCS Qu (tsf)	MOIST (%)
SOFT brown SILTY LOAM				2.5 P	21.0
	655.00				
MEDIUM tan weathered LIMESTONE			13 13 17		
	653.50	-5			
MEDIUM tan weathered LIMESTONE			7 10 14		
	651.00				
End of Boring		-10 -15 -20			

The Unconfined Compressive Strength (UCS) Failure Mode is indicated by (B-Bulge, S-Shear, P-Penetrometer)
The SPT (N value) is the sum of the last two blow values in each sampling zone (AASHTO T206)
BBS, from 137 (Rev. 8-99)

FIGURE 2

Illinois Department of Transportation
Division of Highways
Illinois Department of Transportation/D-2

SOIL BORING LOG

Page 1 of 1

Date 3/22/07

ROUTE FA 301 DESCRIPTION P92-088-92 Retaining Wall, IL 84 in Galena LOGGED BY J. Strating

SECTION 29X-T LOCATION W. Galena Twp. - 13 NW, SEC. , TWP. 28N, RNG. 1W

COUNTY JoDaviess DRILLING METHOD Hollow Stem Auger HAMMER TYPE CME-45 Automatic

STRUCT. NO.
Station

BORING NO. B-7
Station 1217+60
Offset 10.00ft Rt CL
Ground Surface Elev. 656.10 ft

Surface Water Elev. ft
Stream Bed Elev. ft

Groundwater Elev.:
First Encounter ft
Upon Completion ft
After Hrs. ft

Description	Elev.	DEPTH (ft)	BLOWS (/6")	UCS Qu (tsf)	MOIST (%)
Asphalt Widening					
MEDIUM tan/brown SILTY LOAM				0.5 P	12.0
	653.60				
SOFT tan/brown SILTY LOAM				0.3 P	23.0
	652.10	-5			
weathered LIMESTONE					
	649.60				
weathered LIMESTONE					
	647.10	-10			
weathered LIMESTONE					
	643.60				
Run 1 Box 17 tan weathered LIMESTONE 40% Recovery 8 minute run		-15			
	638.60				
Run 2 Box 17 tan weathered LIMESTONE 80% Recovery		-20			
Run 2 Box 17 tan weathered LIMESTONE 80% Recovery *(continued)*					
	633.60				
End of Boring		-25 -30 -35 -40			

The Unconfined Compressive Strength (UCS) Failure Mode is indicated by (B-Bulge, S-Shear, P-Penetrometer)
The SPT (N value) is the sum of the last two blow values in each sampling zone (AASHTO T206)
BBS, from 137 (Rev. 8-99)

FIGURE 2

Illinois Department of Transportation
Division of Highways
Illinois Department of Transportation/D-2

SOIL BORING LOG

Page 1 of 1

Date 3/20/07

ROUTE FA 301 DESCRIPTION P92-088-92 Retaining Wall, IL 84 in Galena LOGGED BY J. Strating

SECTION 29X-T LOCATION W. Galena Twp. - 13 NW, SEC. , TWP. 28N, RNG. 1W

COUNTY JoDaviess DRILLING METHOD Hollow Stem Auger HAMMER TYPE CME-45 Automatic

STRUCT. NO.
Station

BORING NO. B-8
Station 1216+25
Offset 10.00ft Lt CL
Ground Surface Elev. 657.00 ft

Surface Water Elev. ft
Stream Bed Elev. ft

Groundwater Elev.:
First Encounter ft
Upon Completion ft
After Hrs. ft

Description	Elev.	DEPTH (ft)	BLOWS (/6")	UCS Qu (tsf)	MOIST (%)
Asphalt Widening					
LOOSE brown SANDY LOAM					
	655.90				
MEDIUM tan weathered LIMESTONE with SILTY LOAM lens			13 10 10		
	654.40	-5			
DENSE tan weathered LIMESTONE			13 12 26		
	651.90				
VERY DENSE tan weathered LIMESTONE			100/5"		
	649.40	-10	100/1"		
Box 8, Run 1 tan weathered LIMESTONE 40% Recovery 8 min. run					
	643.40	-15			
Box 8, Run 2 tan weathered LIMESTONE 80% Recovery 10 min. run					
	638.40	-20			
End of Boring					

The Unconfined Compressive Strength (UCS) Failure Mode is indicated by (B-Bulge, S-Shear, P-Penetrometer)
The SPT (N value) is the sum of the last two blow values in each sampling zone (AASHTO T206)
BBS, from 137 (Rev. 8-99)

FIGURE 2

MODEL: Default
FILE NAME: E:\101B\Struct\Wall H4. Final Design\Design Plans\CA3D_Sheets\0437010-D264880-012-Borings 2.dgn

LIN ENGINEERING, LTD. Consulting Engineers Springfield, Illinois	USER NAME = LIN06-PC	DESIGNED - AML	REVISED -	STATE OF ILLINOIS DEPARTMENT OF TRANSPORTATION	BORING LOGS S.N. 043-7010	F.A.P. RTE. 301	SECTION 29R-1	COUNTY JO DAVIESS	TOTAL SHEETS 679	SHEET NO. 329
		CHECKED - VPT	REVISED -					CONTRACT NO. 64880		
	PLOT TIME = 12:50:20 PM	DRAWN - AML	REVISED -		SHEET 12 OF 13 SHEETS		ILLINOIS	FED. AID PROJECT		
	PLOT DATE = 10/14/2021	CHECKED - VPT	REVISED -							

10/14/2021 12:50:20 PM

Illinois Department of Transportation
Division of Highways
Illinois Department of Transportation/D-2

SOIL BORING LOG

Page 1 of 1

Date 3/20/07

ROUTE FA 301 DESCRIPTION P92-000-92 Retaining Wall, IL 84 in Galena LOGGED BY J. Strating

SECTION 29X-T LOCATION W. Galena Twp. - 13 NW, SEC. , TWP. 28N, RNG. 1W

COUNTY JoDaviess DRILLING METHOD Hollow Stem Auger HAMMER TYPE CME-45 Automatic

STRUCT. NO.
Station

BORING NO. B-9
Station 1219+00
Offset 12.00ft Lt CL
Ground Surface Elev. 659.70 ft

Surface Water Elev. ft
Stream Bed Elev. ft

Groundwater Elev.:
First Encounter ft
Upon Completion ft
After Hrs. ft

Description	Elev.	DEPTH (ft)	BLOWS (/6")	UCS Qu (tsf)	MOIST (%)
Asphalt Widening					4.0
LOOSE tan/brown SANDY LOAM	657.70				
MEDIUM tan weathered LIMESTONE			15		
			10		
	656.20		14		
MEDIUM brown SANDY LOAM with weathered LIMESTONE		-5	11		
			10		4.0
	653.70		9		
End of Boring					

-10
-15
-20

The Unconfined Compressive Strength (UCS) Failure Mode is indicated by (B-Bulge, S-Shear, P-Penetrometer)
The SPT (N value) is the sum of the last two blow values in each sampling zone (AASHTO T206)

BBS, from 137 (Rev. 8-99)

FIGURE 2

Illinois Department of Transportation

Soil Survey Data

Project:
Route: US 20
Section: 29R-1
County Jo Daviess

Logged By: Wally Garza

Date: 7/30/15 | Sta.: 1202+53 (@1202+50)Elev. 618.1 | Offset: 57' Rt

Depth	Sample No.	Soil Type	Water	Can No.	Qu	Description of Soil Layer (Color, Moisture, Strength, Etc.)
1						
2						1st Encounter – 617.1
3						
4						Auger Refusal @ 617.1
5						
6						
7						
8						
9						
10						

Date: 7/30/15 | Sta.: 1217+17 (@1217+05) Elev. 660.9 | Offset: 35' Lt of CL

Depth	Sample No.	Soil Type	Water	Can No.	Qu	Description of Soil Layer (Color, Moisture, Strength, Etc.)
1						
2						
3						1st Encounter @ 658.4
4						
5						Auger Refusal @ 649.9
6						
7						
8						
9						
10						

Date: 7/29/15 | Sta.: 1217+63 (@ 1217+67) Elev. 669.9 | Offset: 41' Lt of CL

Depth	Sample No.	Soil Type	Water	Can No.	Qu	Description of Soil Layer (Color, Moisture, Strength, Etc.)
1						
2						
3						1st Encounter @ 668.9
4						
5						Auger Refusal @ 665.4
6						
7						
8						
9						
10						

Qu: 0-.25 Very Soft; .25-.5 Soft; .5-1.0 Medium; 1.0-2.0 Stiff; 2.0-4.0 Very Stiff; >4.0 Hard jt9-1-15-1

Page 2

Illinois Department of Transportation

Soil Survey Data

Project:
Route: US 20
Section: 29R-1
County Jo Daviess

Logged By: Wally Garza

Date: 7/30/15 | Sta.: 1219+45 (Elev. 661.5) | Offset: 22' Lt of CL

Depth	Sample No.	Soil Type	Water	Can No.	Qu	Description of Soil Layer (Color, Moisture, Strength, Etc.)
1						
2						1st Encounter – 659.5
3						
4						Auger Refusal @ 659.5
5						
6						
7						
8						
9						
10						

Date: 7/31/15 B-1e | Sta.: B-1e (Elev. 685.6) | Offset: Same Hole

Depth	Sample No.	Soil Type	Water	Can No.	Qu	Description of Soil Layer (Color, Moisture, Strength, Etc.)
1						
2						1st Encounter – 674.1
3						
4						Auger Refusal @ 673.6
5						
6						
7						
8						
9						
10						

Date: 7/30/15 | Sta.: 111+15 (Elev. 696.7) | Offset: 9.5' Lt

Depth	Sample No.	Soil Type	Water	Can No.	Qu	Description of Soil Layer (Color, Moisture, Strength, Etc.)
1						
2						1st Encounter @ 695.2
3						
4						Auger Refusal @ 694.2
5						
6						
7						8" Asphalt
8						
9						
10						

Qu: 0-.25 Very Soft; .25-.5 Soft; .5-1.0 Medium; 1.0-2.0 Stiff; 2.0-4.0 Very Stiff; >4.0 Hard jt9-1-15-1

Page 3

Benchmark: Headwall at Sta. 1227+99.96, 35.85' Lt. of existing ℄ IL 84/U.S. Rte. 20, Elev. 682.42.

Existing Structure: Existing retaining wall was constructed at an unknown date and is of historical significance. Existing retaining wall is 24'-11" in total length measured along the front face of the wall. It is composed of historic stone blocks. The entire length of the existing wall is to be carefully deconstructed and salvaged and will become the property of the City of Galena. Contractor shall deliver salvaged stone to the City, at a time and location to be coordinated with the City Engineer, Andy Lewis, available at (815) 777-1050 or alewis@cityofgalena.org.

Northbound traffic will be maintained on IL 84/U.S. Rte. 20 using stage construction. Southbound traffic will be detoured along Gear St.

Notes:
The Limestone Block Wall at this location shall be constructed of Salvaged Stone in accordance with the Special Provision for Retaining Wall, Special.
Construction vibration monitoring shall be performed in accordance with the contract Special Provisions.
Soil boring logs for boring B-10 are available within the Roadway plans.

LEGEND

- Boring
- Ex. Manhole
- Ex. Power Pole
- Ex. Sanitary Sewer
- Pr. Manhole
- Pr. Inlet
- Pr. Sanitary Sewer
- Pr. Storm Sewer
- Pr. Water Line

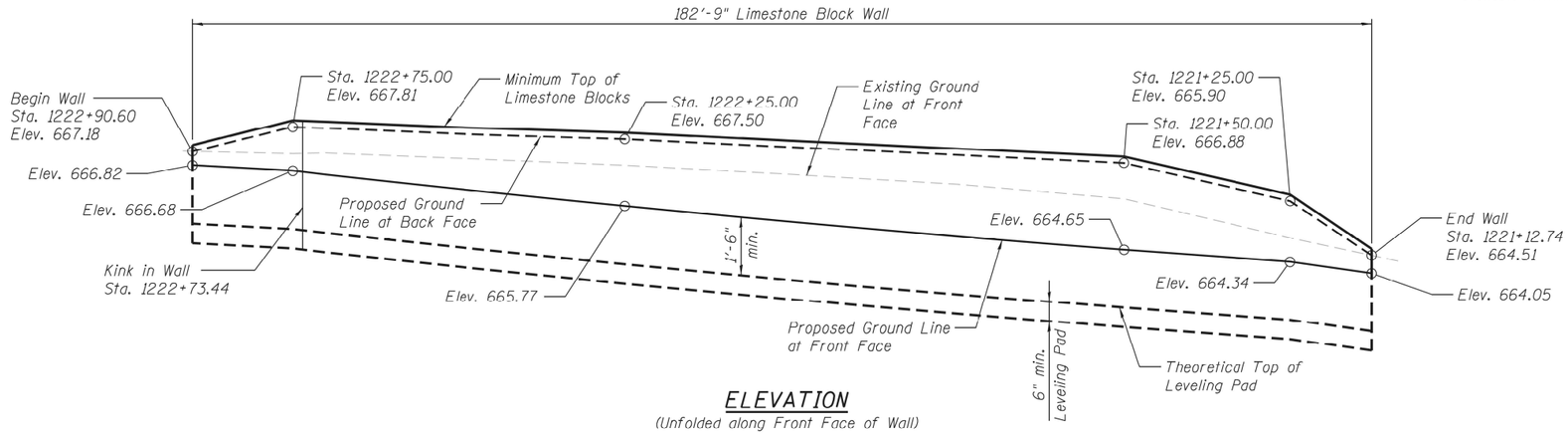

ELEVATION

(Unfolded along Front Face of Wall)

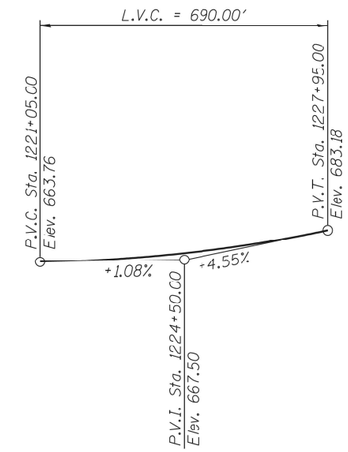

PROFILE GRADE

(Along Proposed ℄ IL 84/U.S. Rte. 20)

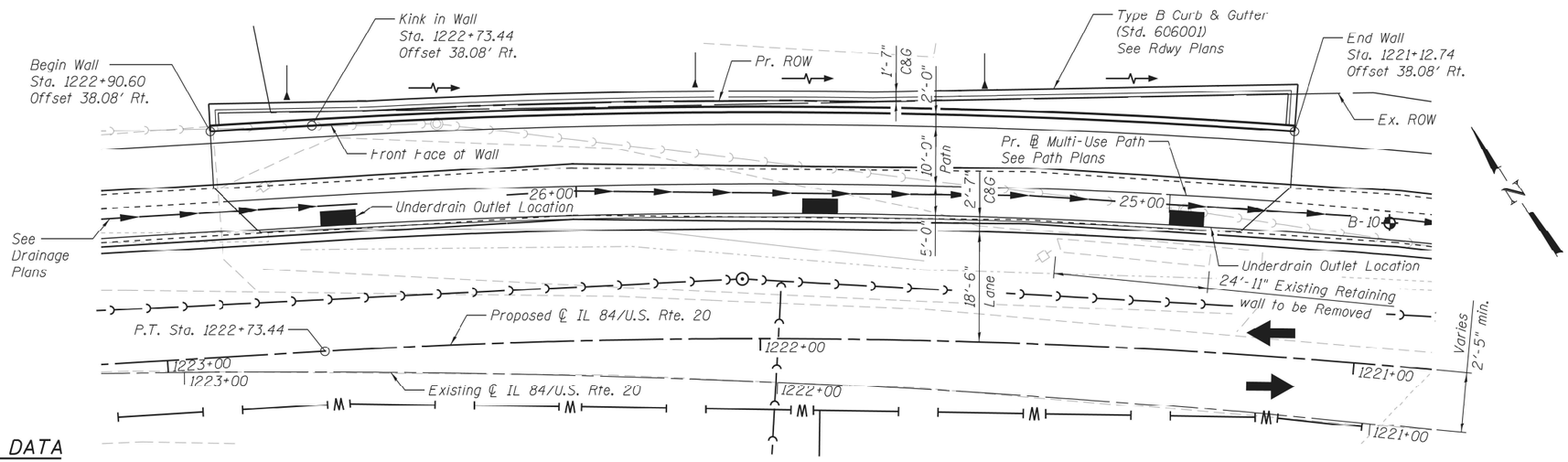

PLAN

Stations and offsets are measured from Proposed ℄ IL 84/U.S. Rte. 20 to Proposed Ground Line at Front Face of Wall.

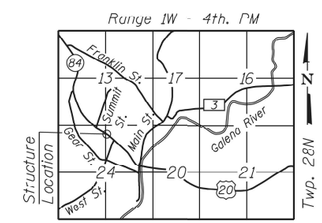

LOCATION SKETCH

CURVE DATA

Prop. Curve 71260
P.I. Sta. = 1220+77.60
Δ = 18° 06' 22" (LT)
D = 4° 35' 01"
R = 1,250.00'
T = 199.17'
L = 395.02'
E = 15.77'
P.C. Sta. = 1218+78.43
P.T. Sta. = 1222+73.44

DESIGN SPECIFICATIONS

2017 AASHTO LRFD Bridge Design Specifications, 8th Edition

GENERAL PLAN & ELEVATION
IL 84/U.S. ROUTE 20
F.A.P. RTE. 301 - SEC. 29R-1
JO DAVIESS COUNTY
STATION 1221+12.74 TO 1222+90.60
WALL I

MODEL: Wall_I-D264880-001
FILE NAME: E:\1019\Struct\Wall I\3. Final Plans\CADD_Sheets\Wall_I-D264880.dgn

LIN ENGINEERING, LTD. Consulting Engineers Springfield, Illinois	USER NAME = LIN06-PC	DESIGNED - AML	REVISED -	STATE OF ILLINOIS DEPARTMENT OF TRANSPORTATION	GENERAL PLAN AND ELEVATION WALL I
		CHECKED - VPT	REVISED -		
	PLOT TIME = 12:50:28 PM	DRAWN - AML	REVISED -		
	PLOT DATE = 10/14/2021	CHECKED - VPT	REVISED -		SHEET 1 OF 2 SHEETS

F.A.P. RTE.	SECTION	COUNTY	TOTAL SHEETS	SHEET NO.
301	29R-1	JO DAVIESS	679	331
		CONTRACT NO. 64880		
		ILLINOIS	FED. AID PROJECT	

10/14/2021 12:50:28 PM

TOTAL BILL OF MATERIAL

Item	Unit	Total
Rock Excavation for Structures	Cu.Yd.	10
Geocomposite Wall Drain	Sq.Yd.	49
Retaining Wall Removal	Foot	25
Retaining Wall, Special	Sq.Ft.	607
Pipe Underdrains for Structures 4"	Foot	183

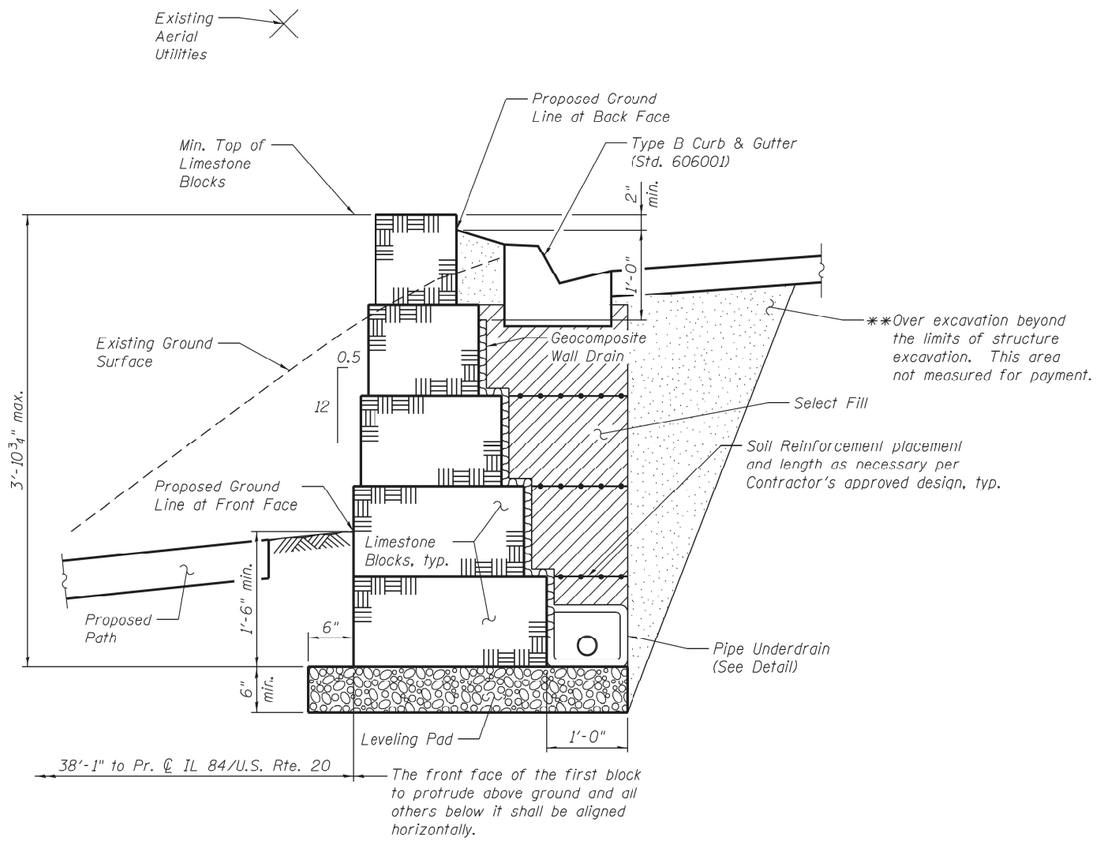

TYPICAL WALL SECTION

** Backfill remainder of structure excavation and over excavation with same material specified for select fill.

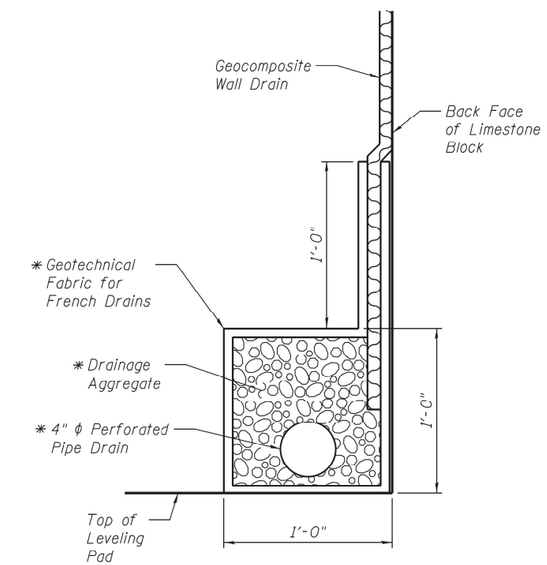

PIPE UNDERDRAIN DETAIL

* Included in the cost of Pipe Underdrains for Structures 4".

MODEL: Wall_I-D264880-002
FILE NAME: E:\01B\Structl\Wall I\3. Final Plans\CADD_Sheets\Wall_I-D264880.dgn

LIN ENGINEERING, LTD. Consulting Engineers Springfield, Illinois	USER NAME = LIN06-PC	DESIGNED - AML	REVISED -	STATE OF ILLINOIS DEPARTMENT OF TRANSPORTATION	DETAILS WALL I
		CHECKED - VPT	REVISED -		
	PLOT TIME = 12:50:28 PM	DRAWN - AML	REVISED -		
	PLOT DATE = 10/14/2021	CHECKED - VPT	REVISED -		SHEET 2 OF 2 SHEETS

F.A.P. RTE.	SECTION	COUNTY	TOTAL SHEETS	SHEET NO.
301	29R-1	JO DAVIESS	679	332
		CONTRACT NO. 64880		
		ILLINOIS FED. AID PROJECT		

10/14/2021 12:50:28 PM

Benchmark: Headwall at Sta. 1227+99.96, 35.85' Lt. of existing ℄ IL 84/U.S. Rte. 20, Elev. 682.42.

Existing Structure: Existing retaining wall was constructed at an unknown date and is of historical significance. Existing retaining wall is 246'-9" in total length measured along the front face of the wall. It is composed of historic stone blocks. The entire length of the existing wall is to be carefully deconstructed and salvaged and will become the property of the City of Galena. Contractor shall deliver salvaged stone to the City, at a time and location to be coordinated with the City Engineer, Andy Lewis, available at (815) 777-1050 or alewis@cityofgalena.org.

Northbound traffic will be maintained on IL 84/U.S. Rte. 20 using stage construction. Southbound traffic will be detoured along Gear St.

Notes:
The Limestone Block Wall at this location shall be constructed of Newly Acquired Stone in accordance with the Special Provision for Retaining Wall, Special.
Construction vibration monitoring shall be performed in accordance with the contract Special Provisions.
Soil boring logs for boring B-11 are available within the Roadway plans.

LEGEND

- Boring
- Ex. Power Pole
- Ex. Sanitary Sewer
- Ex. Sign
- Pr. Manhole
- Pr. Inlet
- Pr. Storm Sewer
- Ex. Water Valve Box
- Pr. Water Valve Box
- Ex. Water Line
- Pr. Water Line
- Ex. Fire Hydrant
- Pr. Handrail

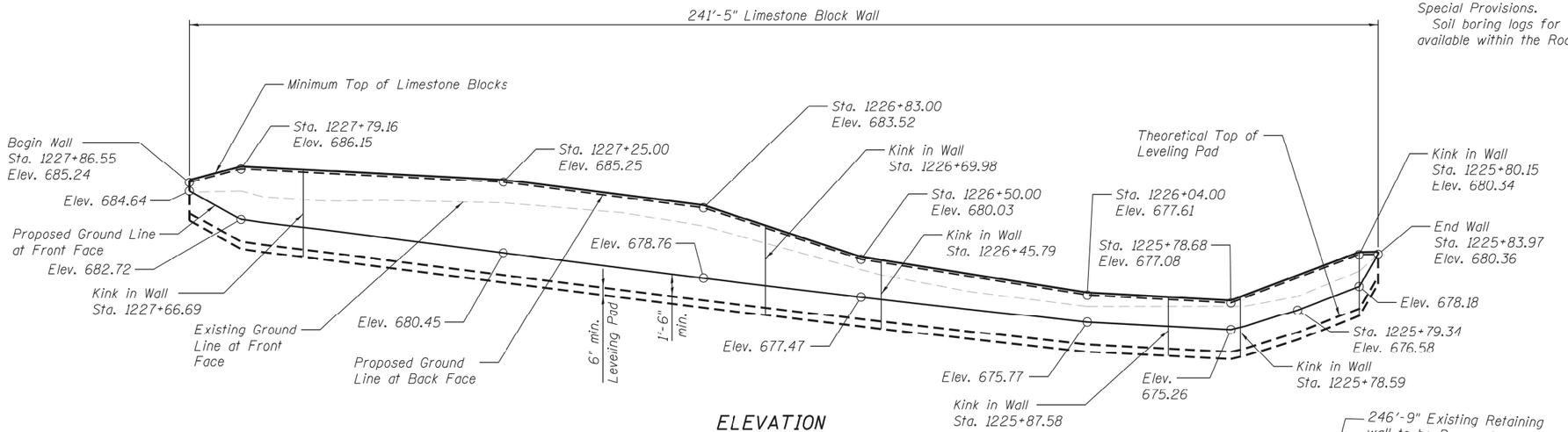

ELEVATION

(Unfolded along Front Face of Wall)

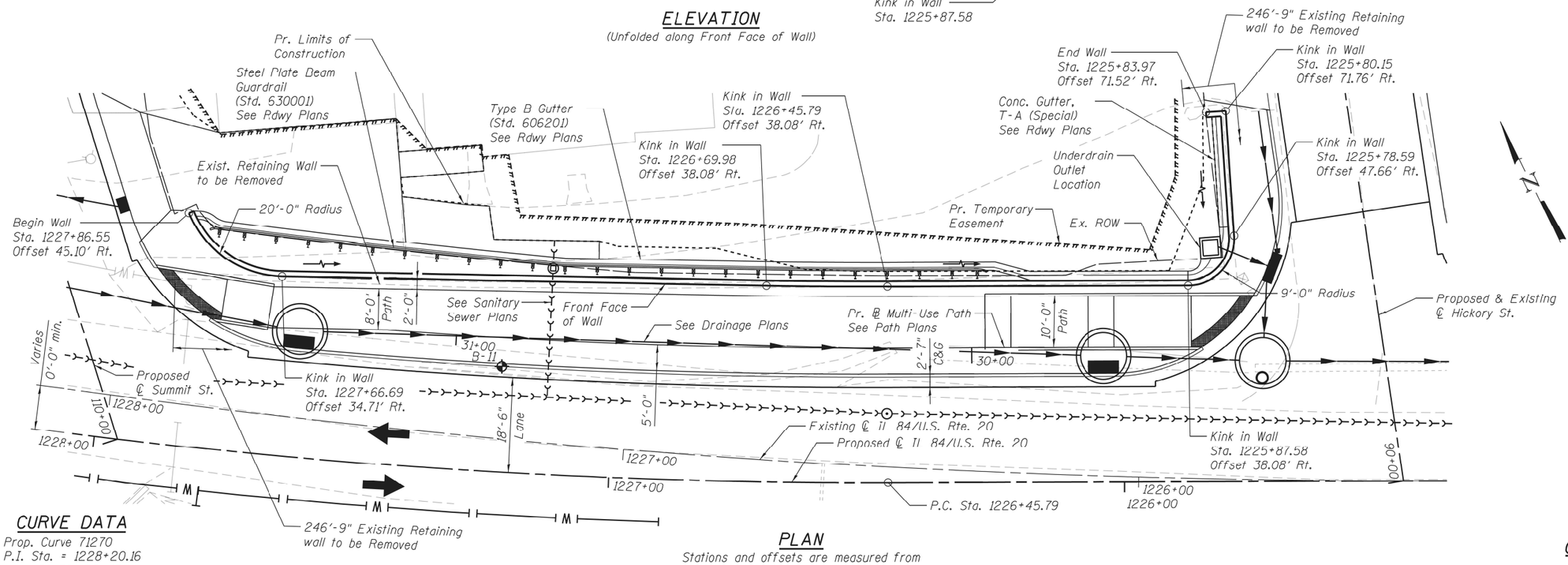

PLAN

Stations and offsets are measured from Proposed ℄ IL 84/U.S. Rte. 20 to Proposed Line at Front Face of Wall.

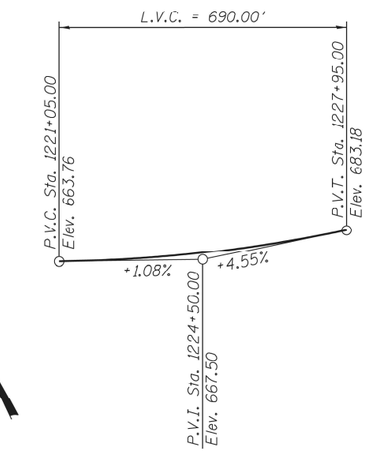

PROFILE GRADE

(Along Proposed ℄ IL 84/U.S. Rte. 20)

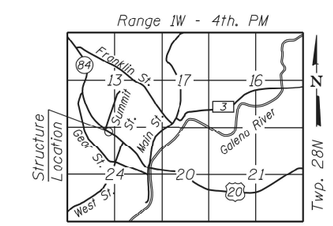

LOCATION SKETCH

CURVE DATA

Prop. Curve 71270
P.I. Sta. = 1228+20.16
Δ = 15° 52' 55" (RT)
D = 4° 35' 01"
R = 1,250.00'
T = 174.36'
L = 346.49'
E = 12.10'
P.C. Sta. = 1226+45.79
P.T. Sta. = 1229+92.28

DESIGN SPECIFICATIONS

2017 AASHTO LRFD Bridge Design Specifications, 8th Edition

GENERAL PLAN & ELEVATION
IL 84/U.S. ROUTE 20
F.A.P. RTE. 301 - SEC. 29R-1
JO DAVIESS COUNTY
STATION 1225+80.08 TO 1227+86.55
WALL J

MODEL: Wall_J-D2648800-001
FILE NAME: E:\1013\Struct\Wall J\3. Final Plans\CADD_Sheets\Wall_J-D2648800.dgn

LIN ENGINEERING, LTD. Consulting Engineers Springfield, Illinois	USER NAME = LIN06-PC	DESIGNED - AML	REVISED -	STATE OF ILLINOIS DEPARTMENT OF TRANSPORTATION
		CHECKED - VPT	REVISED -	
	PLOT TIME = 12:50:29 PM	DRAWN - AML	REVISED -	
	PLOT DATE = 10/14/2021	CHECKED - VPT	REVISED -	

GENERAL PLAN AND ELEVATION
WALL J

SHEET 1 OF 2 SHEETS

F.A.P. RTE.	SECTION	COUNTY	TOTAL SHEETS	SHEET NO.
301	29R-1	JO DAVIESS	679	333
		CONTRACT NO. 64880		
		ILLINOIS	FED. AID PROJECT	

10/14/2021 12:50:29 PM

TOTAL BILL OF MATERIAL

Item	Unit	Total
Geocomposite Wall Drain	Sq.Yd.	106
Retaining Wall Removal	Foot	247
Retaining Wall, Special	Sq.Ft.	1,169
Pipe Underdrains for Structures 4"	Foot	243

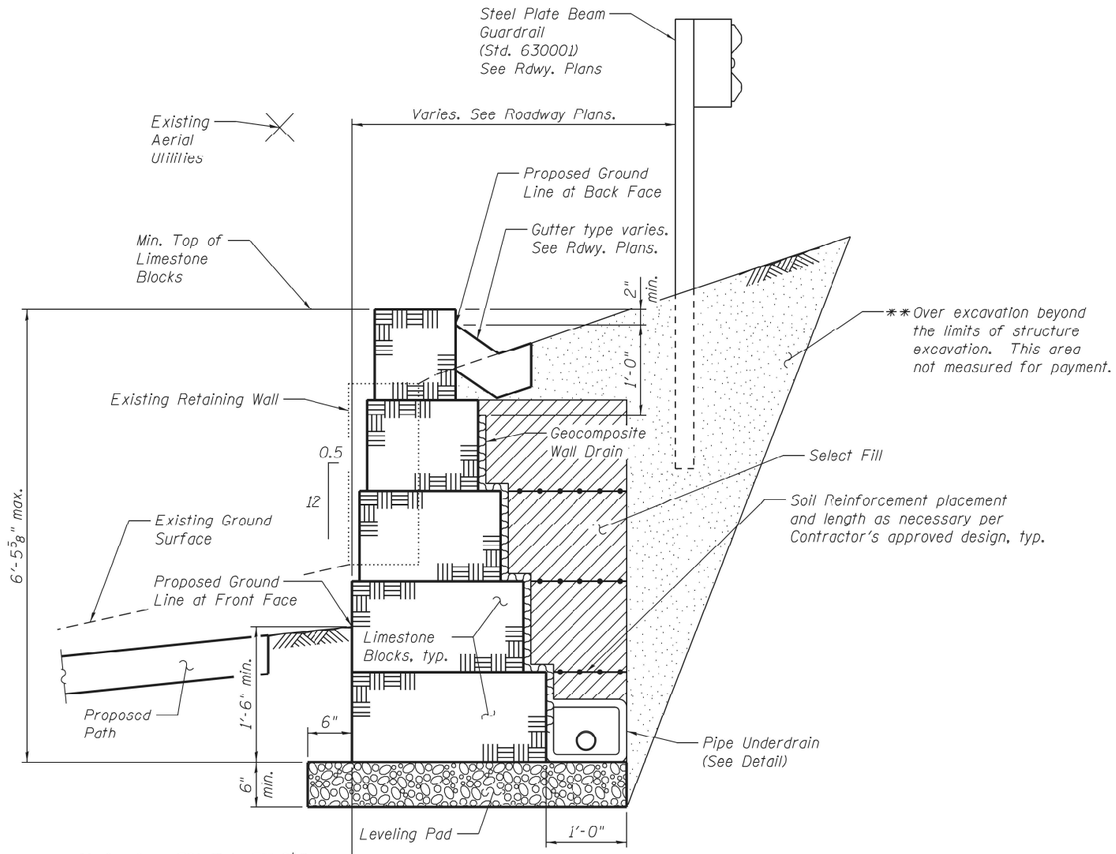

TYPICAL WALL SECTION

** Backfill remainder of structure excavation and over excavation with same material specified for select fill.

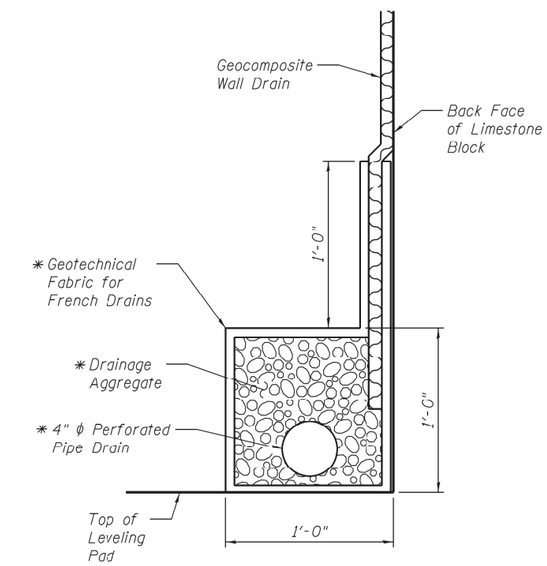

PIPE UNDERDRAIN DETAIL

* Included in the cost of Pipe Underdrains for Structures 4".

MODEL: Wall_J-D264880-002
FILE NAME: E:\1019\Struct\Wall J\3. Final Plans\CADD_Sheets\Wall_J-D264880.dgn

LIN ENGINEERING, LTD.
Consulting Engineers
Springfield, Illinois

USER NAME = LIN06-PC	DESIGNED - AML	REVISED -	
	CHECKED - VPT	REVISED -	
PLOT TIME = 12:50:30 PM	DRAWN - AML	REVISED -	
PLOT DATE = 10/14/2021	CHECKED - VPT	REVISED -	

STATE OF ILLINOIS
DEPARTMENT OF TRANSPORTATION

DETAILS
WALL J

SHEET 2 OF 2 SHEETS

F.A.P. RTE.	SECTION	COUNTY	TOTAL SHEETS	SHEET NO.
301	29R-1	JO DAVIESS	679	334
		CONTRACT NO. 64880		
		ILLINOIS FED. AID PROJECT		

10/14/2021 12:50:30 PM

Benchmark: Headwall at Sta. 1227+99.96, 35.85' Lt. of existing ℄ IL 84/U.S. Rte. 20, Elev. 682.42.

Existing Structure: None.

Northbound traffic will be maintained on IL 84/U.S. Rte. 20 using stage construction. Southbound traffic will be detoured along Gear St.

Notes:
The Limestone Block Wall at this location shall be constructed of Newly Acquired Stone in accordance with the Special Provision for Retaining Wall, Special.
Construction vibration monitoring shall be performed in accordance with the contract Special Provisions.
The Flagstone Sidewalk is roughly 2'-0" wide x 147'-8" long, and shall fill the space between the back face of wall and the Pipe Handrail, Special.

LEGEND

- Ex. Guardrail
- Ex. Manhole
- Ex. Power Pole
- Ex. Sanitary Sewer
- Pr. Manhole
- Pr. Inlet
- Pr. Storm Sewer
- X — Pr. Handrail

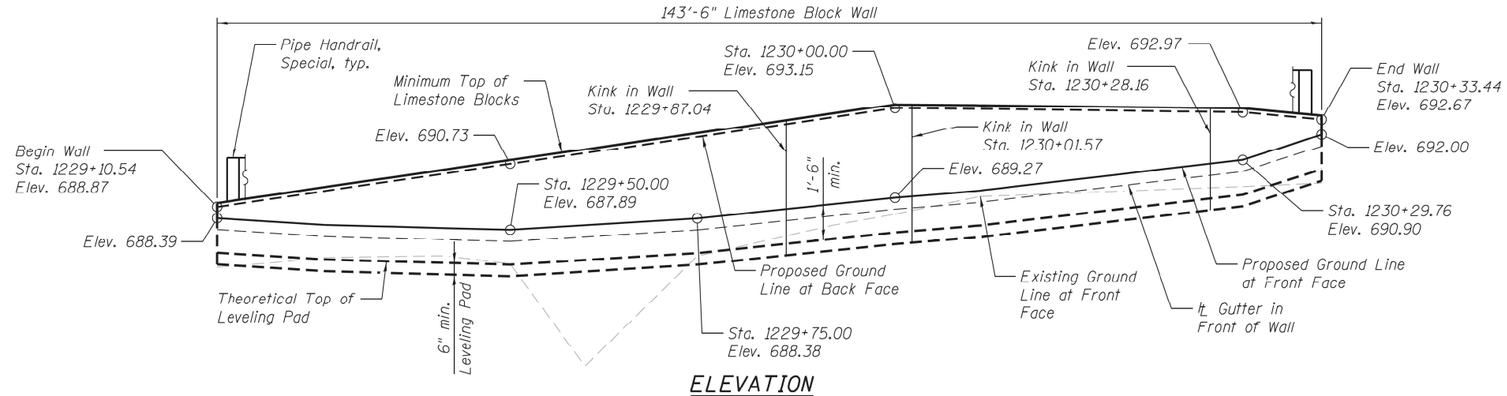

ELEVATION

(Unfolded along Front Face of Wall)

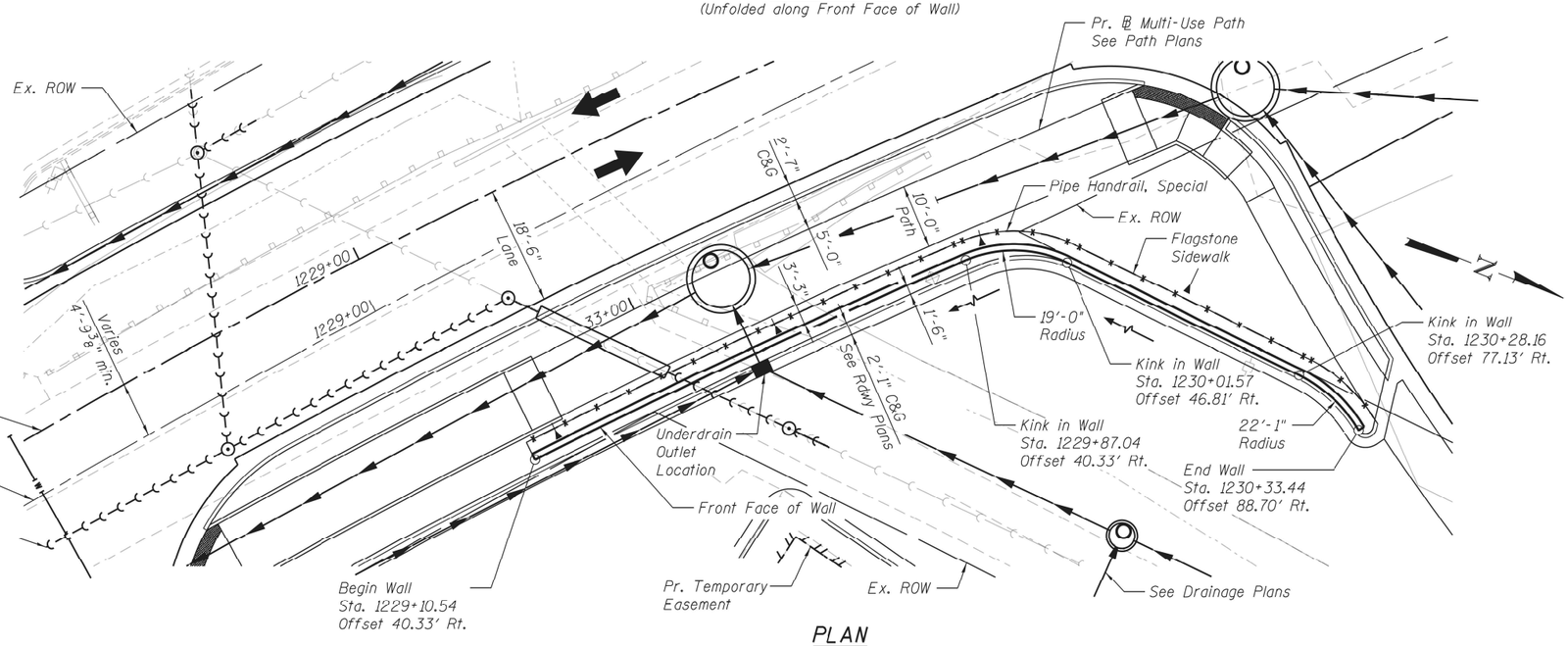

PLAN

Stations and offsets are measured from Proposed ℄ IL 84/U.S. Rte. 20 to Proposed Ground Line at Front Face of Wall.

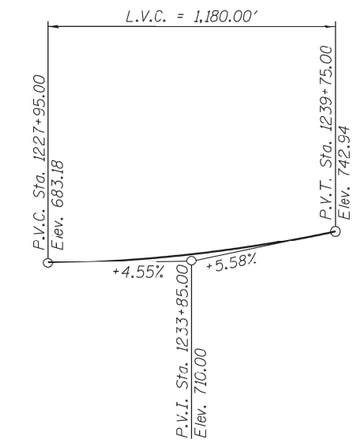

PROFILE GRADE

(Along Proposed ℄ IL 84/U.S. Rte. 20)

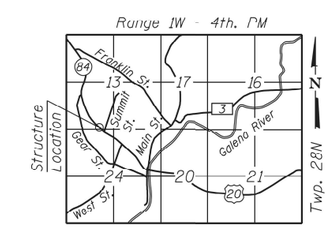

LOCATION SKETCH

CURVE DATA

Prop. Curve 71270
P.I. Sta. = 1228+20.16
Δ = 15° 52' 55" (RT)
D = 4° 35' 01"
R = 1,250.00'
T = 174.36'
L = 346.49'
E = 12.10'
P.C. Sta. = 1226+45.79
P.T. Sta. = 1229+92.28

DESIGN SPECIFICATIONS

2017 AASHTO LRFD Bridge Design Specifications, 8th Edition

GENERAL PLAN & ELEVATION
IL 84/U.S. ROUTE 20
F.A.P. RTE. 301 - SEC. 29R-1
JO DAVIESS COUNTY
STATION 1229+10.54 TO 1230+33.44
WALL K

MODEL: Wall_K-D264880-001
FILE NAME: E:\013\Struct\Wall K\3. Final Plans\CADD_Sheets\Wall_K-D264880.dgn

LIN ENGINEERING, LTD.
Consulting Engineers
Springfield, Illinois

USER NAME = LIN06-PC	DESIGNED - AML	REVISED -	
	CHECKED - VPT	REVISED -	
PLOT TIME = 12:50:31 PM	DRAWN - AML	REVISED -	
PLOT DATE = 10/14/2021	CHECKED - VPT	REVISED -	

STATE OF ILLINOIS
DEPARTMENT OF TRANSPORTATION

GENERAL PLAN AND ELEVATION
WALL K

SHEET 1 OF 2 SHEETS

F.A.P. RTE.	SECTION	COUNTY	TOTAL SHEETS	SHEET NO.
301	29R-1	JO DAVIESS	679	335
		CONTRACT NO. 64880		
	ILLINOIS	FED. AID PROJECT		

10/14/2021 12:50:31 PM

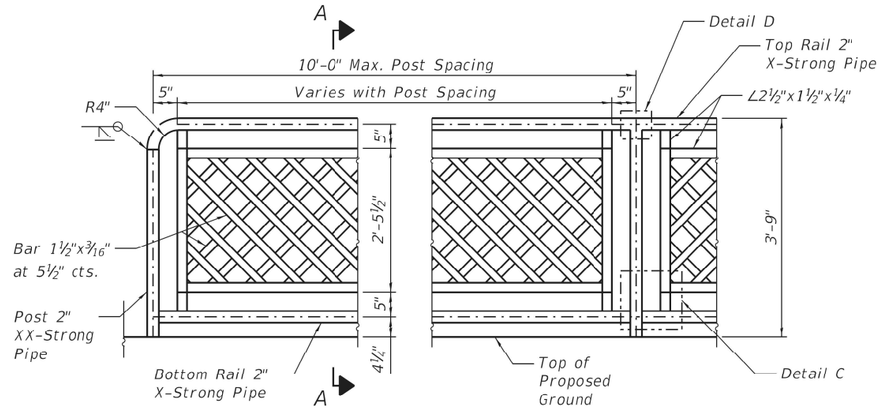

ELEVATION - PIPE HANDRAIL, SPECIAL

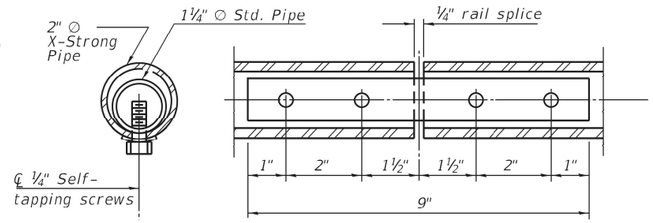

RAIL SPLICE

PIPE HANDRAIL, SPECIAL LOCATION

Point	Station	Offset
Begin	1229+11.05	37.33' Rt.
Kink	1229+87.04	37.33' Rt.
Kink	1230+03.83	44.84' Rt.
Kink	1230+30.42	75.15' Rt.
End	1230+36.34	87.80' Rt.

TOTAL BILL OF MATERIAL

Item	Unit	Total
Geocomposite Wall Drain	Sq.Yd.	56
Flagstone Sidewalk	Sq.Ft.	296
Pipe Handrail, Special	Foot	147.0
Retaining Wall, Special	Sq.Ft.	628
Pipe Underdrains for Structures 4"	Foot	144

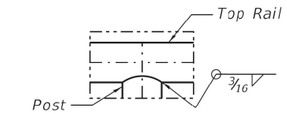

DETAIL D

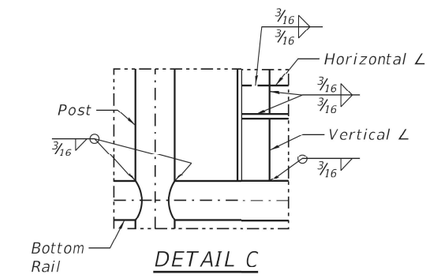

DETAIL C

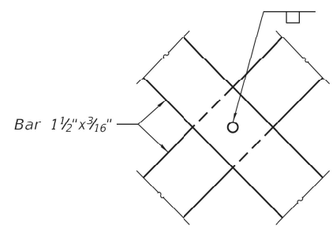

VIEW B-B

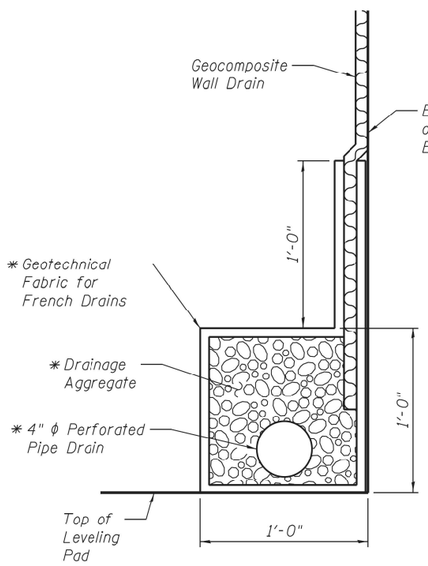

PIPE UNDERDRAIN DETAIL

* Included in the cost of Pipe Underdrains for Structures 4".

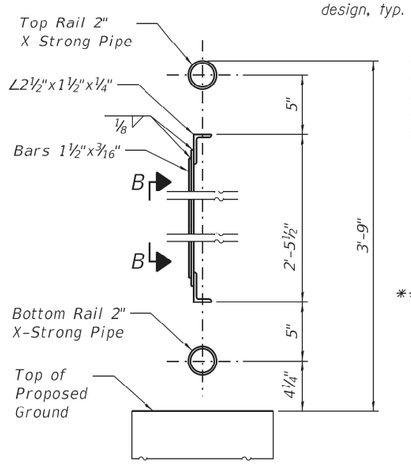

SECTION A-A

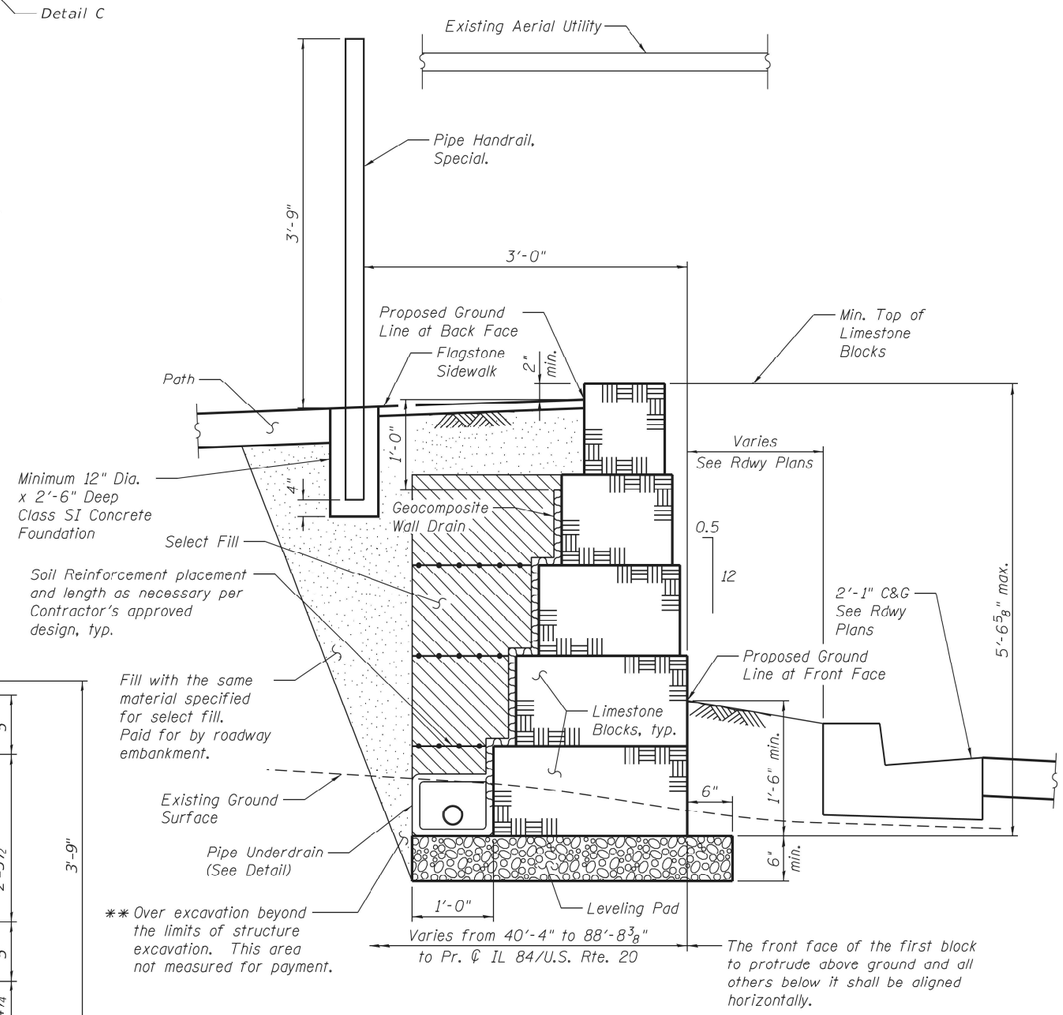

TYPICAL WALL SECTION

** Backfill remainder of structure excavation and over excavation with same material specified for select fill.

Notes:

Gripping surfaces shall be uninterrupted by posts, other construction elements, or obstructions.

Ends of handrail shall be rounded.

Handrail shall not rotate within their fittings.

Handrail shall conform to Section 509 of the Standard Specifications, with the exception that all pipe and connections shall be welded, galvanized or aluminum, according to Article 1006.30 or 1006.34.

All posts, railing, splices, anchor devices, and plates shall be painted black using the Inorganic Zinc Rich Primer / Acrylic / Acrylic System for shop and field painting of new structural steel.

Fasteners shall be mechanically galvanized in painted areas.

Post spacing between the points shown in the table is at the discretion of the fabricator, in order to provide an aesthetically pleasing and cost effective design. Spacing of posts shall not exceed 10'-0".

Posts and vertical bars shall be fabricated to be plumb when installed on the retaining wall. Angle the horizontal rails as necessary to follow the vertical profile of the top of retaining wall.

Posts shall be placed in Class SI Conrete Foundation as shown in the Typical Wall Section. Concrete Foundation shall be included in the cost of Pipe Handrail, Special.

The Contractor shall be responsible for field verification of all horizontal and vertical geometry prior to fabrication of the handrail.

Handrail shall satisfy the loading requirements of Section 13.8.2 of the 2017 AASHTO LRFD Bridge Design Specifications, 8th Edition for Pedestrian Railing.

Member sizes shown are for estimating purposes only. The Contractor shall provide design calculations sealed by a Structural Engineer licensed in the State of Illinois with the actual member sizes used for fabrication.

Clear space between elements of the railing shall not allow the passage of a sphere greater than 4" in diameter.

This work shall consist of designing, furnishing, galvanizing, painting, and erecting handrails as listed above and according to these plans. This work shall be paid for at the contract unit price per FOOT for PIPE HANDRAIL, SPECIAL.

MODEL: Wall_K-D264880-002
FILE NAME: E:\1013\Struct\Wall K13. Final Plans\CADD_Sheets\Wall_K-D264880.dgn

LIN ENGINEERING, LTD.
Consulting Engineers
Springfield, Illinois

USER NAME = LIN06-PC	DESIGNED - AML	REVISED -	
	CHECKED - VPT	REVISED -	
PLOT TIME = 12:50:31 PM	DRAWN - AML	REVISED -	
PLOT DATE = 10/14/2021	CHECKED - VPT	REVISED -	

STATE OF ILLINOIS
DEPARTMENT OF TRANSPORTATION

DETAILS
WALL K

SHEET 2 OF 2 SHEETS

F.A.P. RTE.	SECTION	COUNTY	TOTAL SHEETS	SHEET NO.
301	29R-1	JO DAVIESS	679	336
		CONTRACT NO. 64880		
	ILLINOIS	FED. AID PROJECT		

10/14/2021 12:50:31 PM

Benchmark: Headwall at Sta. 1227+99.96, 35.85' Lt. of existing ℄ IL 84/U.S. Rte. 20, Elev. 682.42.

Existing Structure: None.

Northbound traffic will be maintained on IL 84/U.S. Rte. 20 using stage construction. Southbound traffic will be detoured along Gear St.

Notes:
The Limestone Block Wall at this location shall be constructed of Newly Acquired Stone in accordance with the Special Provision for Retaining Wall, Special.
Construction vibration monitoring shall be performed in accordance with the contract Special Provisions.
Soil boring logs for borings B-1f thru B-4f are available within the Roadway plans.

LEGEND

- Boring
- Ex. Fence
- Pr. Fence or Handrail
- Pr. Inlet
- Pr. Storm Sewer

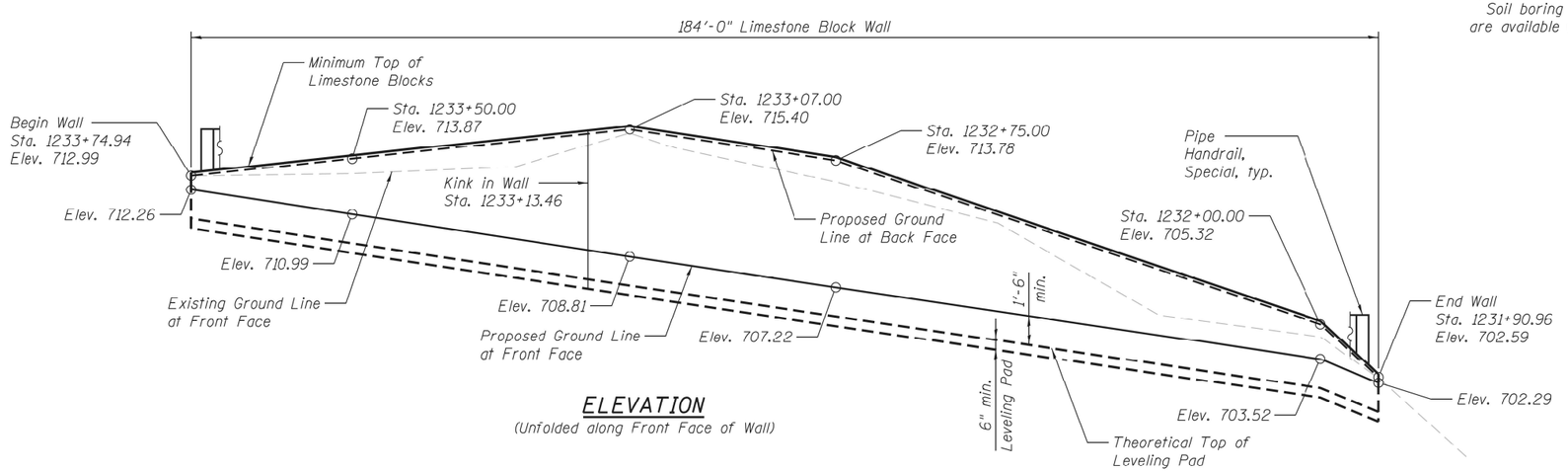

ELEVATION
(Unfolded along Front Face of Wall)

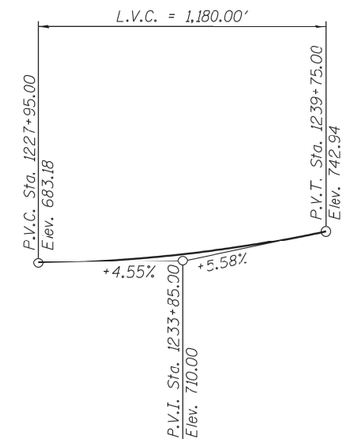

PROFILE GRADE
(Along Proposed ℄ IL 84/U.S. Rte. 20)

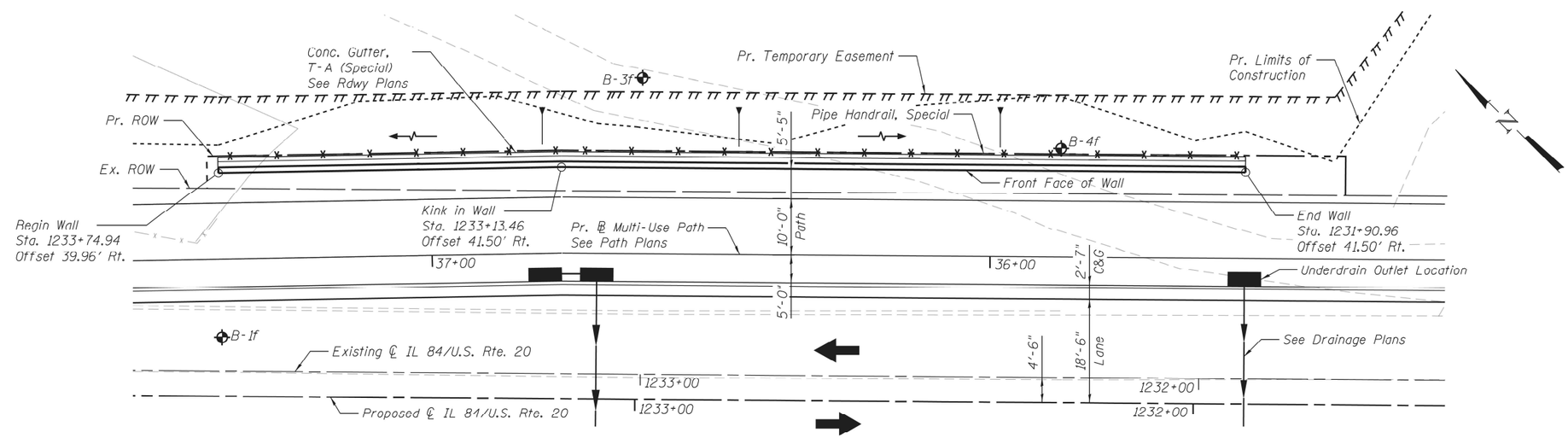

PLAN
Stations and offsets are measured from Proposed ℄ IL 84/U.S. Rte. 20 to Proposed Ground Line at Front Face of Wall.

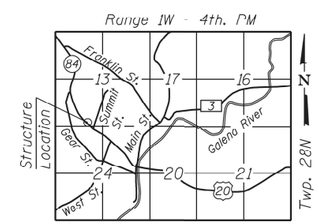

LOCATION SKETCH

DESIGN SPECIFICATIONS
2017 AASHTO LRFD Bridge Design Specifications, 8th Edition

GENERAL PLAN & ELEVATION
IL 84/U.S. ROUTE 20
F.A.P. RTE. 301 - SEC. 29R-1
JO DAVIESS COUNTY
STATION 1231+90.96 TO 1233+74.94
WALL L

MODEL: Wall_L-D264880-001
FILE NAME: E:\1019\Struct\Wall L\3. Final Plans\CADD_Sheets\Wall_L-D264880.dgn

LIN ENGINEERING, LTD.
Consulting Engineers
Springfield, Illinois

USER NAME = LIN06-PC	DESIGNED - AML	REVISED -	
	CHECKED - VPT	REVISED -	
PLOT TIME = 12:50:32 PM	DRAWN - AML	REVISED -	
PLOT DATE = 10/14/2021	CHECKED - VPT	REVISED -	

STATE OF ILLINOIS
DEPARTMENT OF TRANSPORTATION

GENERAL PLAN AND ELEVATION
WALL L

SHEET 1 OF 2 SHEETS

F.A.P. RTE.	SECTION	COUNTY	TOTAL SHEETS	SHEET NO.
301	29R-1	JO DAVIESS	679	337
		CONTRACT NO. 64880		
		ILLINOIS FED. AID PROJECT		

10/14/2021 12:50:32 PM

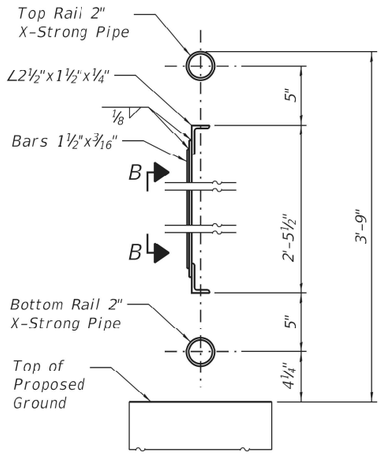

SECTION A-A

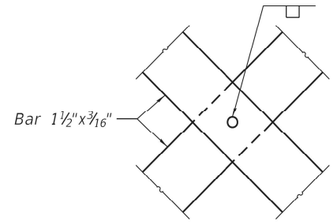

VIEW B-B

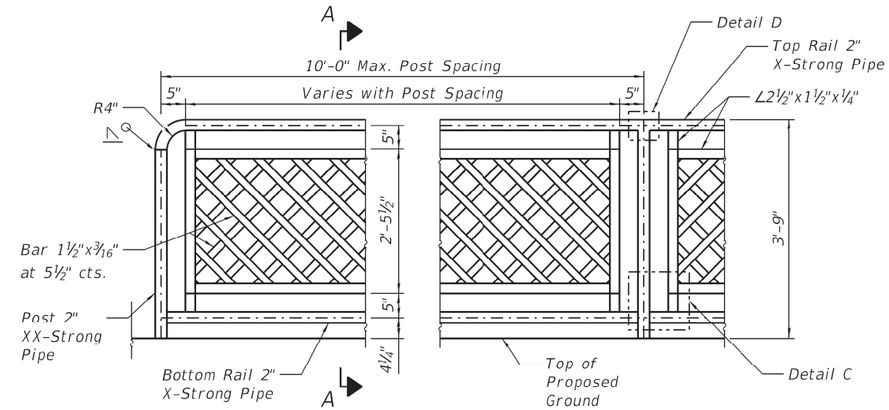

ELEVATION - PIPE HANDRAIL, SPECIAL

TOTAL BILL OF MATERIAL

Item	Unit	Total
Geocomposite Wall Drain	Sq.Yd.	103
Pipe Handrail, Special	Foot	183.0
Retaining Wall, Special	Sq.Ft.	1,089
Pipe Underdrains for Structures 4"	Foot	185

PIPE HANDRAIL, SPECIAL LOCATION

Point	Station	Offset
Begin	1233+74.48	42.98' Rt.
Kink	1233+13.50	44.50' Rt.
End	1231+91.50	44.50' Rt.

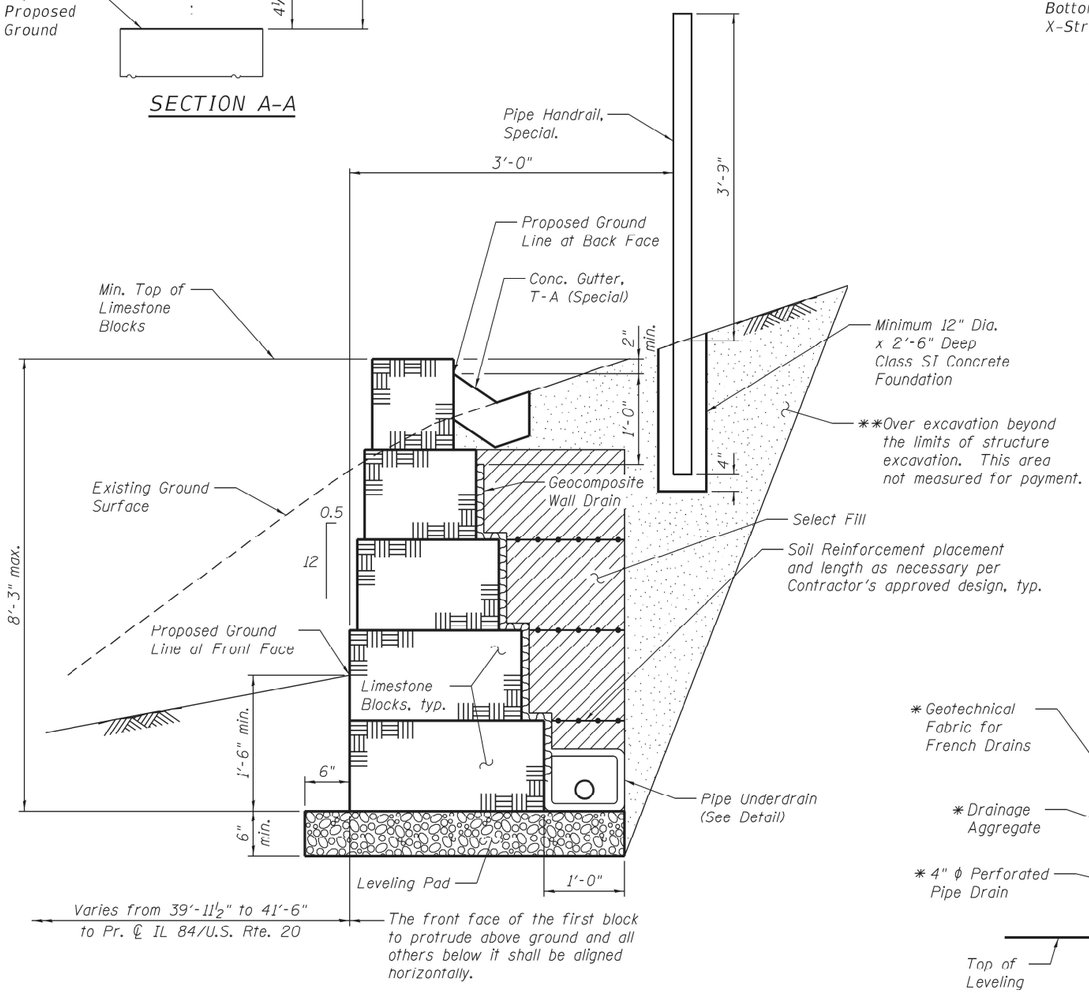

TYPICAL WALL SECTION

** Backfill remainder of structure excavation and over excavation with same material specified for select fill.

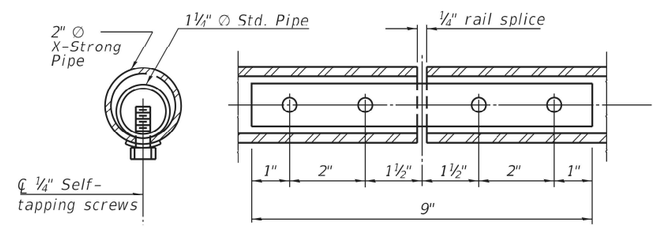

RAIL SPLICE

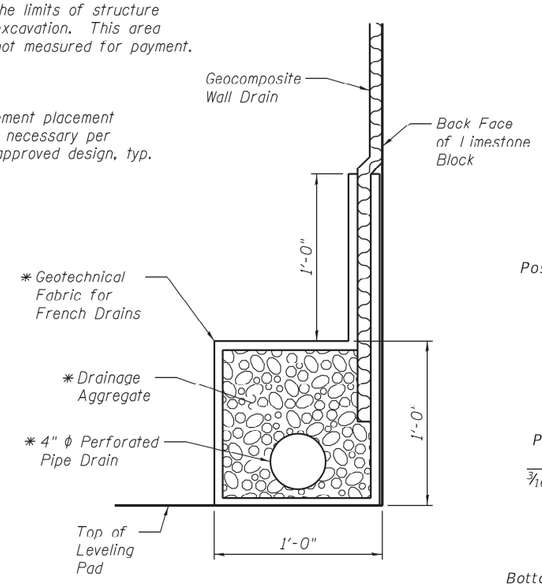

PIPE UNDERDRAIN DETAIL

* Included in the cost of Pipe Underdrains for Structures 4".

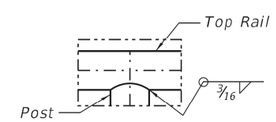

DETAIL D

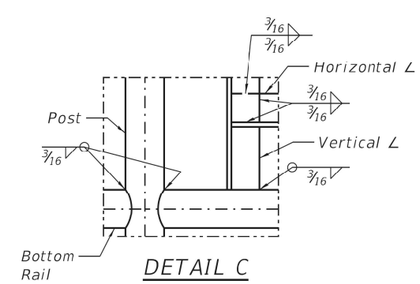

DETAIL C

Notes:

Gripping surfaces shall be uninterrupted by posts, other construction elements, or obstructions.

Ends of handrail shall be rounded.

Handrail shall not rotate within their fittings.

Handrail shall conform to Section 509 of the Standard Specifications, with the exception that all pipe and connections shall be welded, galvanized or aluminum, according to Article 1006.30 or 1006.34.

All posts, railing, splices, anchor devices, and plates shall be painted black using the Inorganic Zinc Rich Primer / Acrylic / Acrylic System for shop and field painting of new structural steel.

Fasteners shall be mechanically galvanized in painted areas.

Post spacing between the points shown in the table is at the discretion of the fabricator, in order to provide an aesthetically pleasing and cost effective design. Spacing of posts shall not exceed 10'-0".

Posts and vertical bars shall be fabricated to be plumb when installed on the retaining wall. Angle the horizontal rails as necessary to follow the vertical profile of the top of retaining wall.

Posts shall be placed in Class SI Conrete Foundation as shown in the Typical Wall Section. Concrete Foundation shall be included in the cost of Pipe Handrail, Special.

The Contractor shall be responsible for field verification of all horizontal and vertical geometry prior to fabrication of the handrail.

Handrail shall satisfy the loading requirements of Section 13.8.2 of the 2017 AASHTO LRFD Bridge Design Specifications, 8th Edition for Pedestrian Railing.

Member sizes shown are for estimating purposes only. The Contractor shall provide design calculations sealed by a Structural Engineer licensed in the State of Illinois with the actual member sizes used for fabrication.

Clear space between elements of the railing shall not allow the passage of a sphere greater than 4" in diameter.

This work shall consist of designing, furnishing, galvanizing, painting, and erecting handrails as listed above and according to these plans. This work shall be paid for at the contract unit price per FOOT for PIPE HANDRAIL, SPECIAL.

MODEL: Wall_L-D264880-002
FILE NAME: E:\1019\Struct\Wall L13. Final Plans\CADD_Sheets\Wall_L-D264880.dgn

LIN ENGINEERING, LTD.
Consulting Engineers
Springfield, Illinois

USER NAME = LIN06-PC	DESIGNED - AML	REVISED -	
	CHECKED - VPT	REVISED -	
PLOT TIME = 12:50:33 PM	DRAWN - AML	REVISED -	
PLOT DATE = 10/14/2021	CHECKED - VPT	REVISED -	

STATE OF ILLINOIS
DEPARTMENT OF TRANSPORTATION

DETAILS
WALL L

SHEET 2 OF 2 SHEETS

F.A.P. RTE.	SECTION	COUNTY	TOTAL SHEETS	SHEET NO.
301	29R-1	JO DAVIESS	679	338
		CONTRACT NO. 64880		
	ILLINOIS	FED. AID PROJECT		

10/14/2021 12:50:33 PM

Benchmark: Headwall at Sta. 1227+99.96, 35.85' Lt. of existing ℄ IL 84/U.S. Rte. 20, Elev. 682.42.

Existing Structure: None.

Northbound traffic will be maintained on IL 84/U.S. Rte. 20 using stage construction. Southbound traffic will be detoured along Gear St.

Notes:
The Limestone Block Wall at this location shall be constructed of Newly Acquired Stone in accordance with the Special Provision for Retaining Wall, Special.
Construction vibration monitoring shall be performed in accordance with the contract Special Provisions.
Soil boring logs for borings B-1g thru B-5g are available within the Roadway plans.

LEGEND

- Boring
- Ex. Fence
- Pr. Fence or Handrail
- Pr. Inlet
- Pr. Storm Sewer

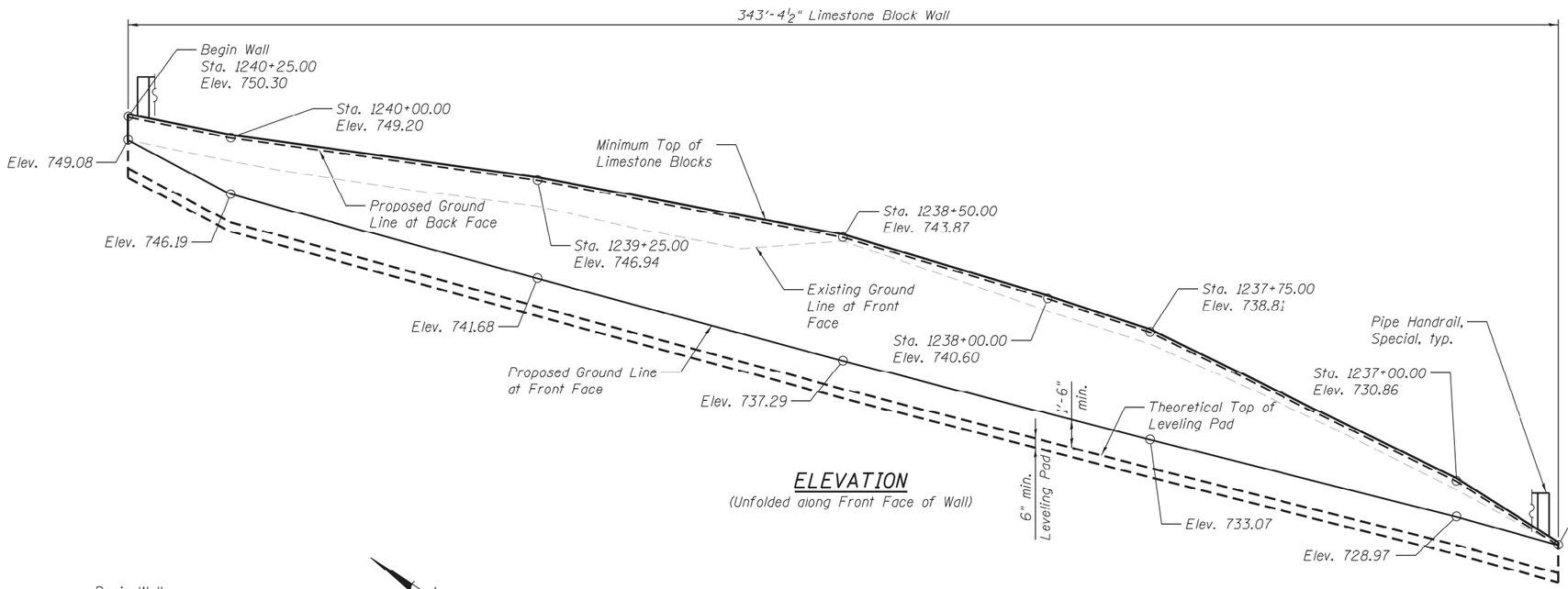

ELEVATION

(Unfolded along Front Face of Wall)

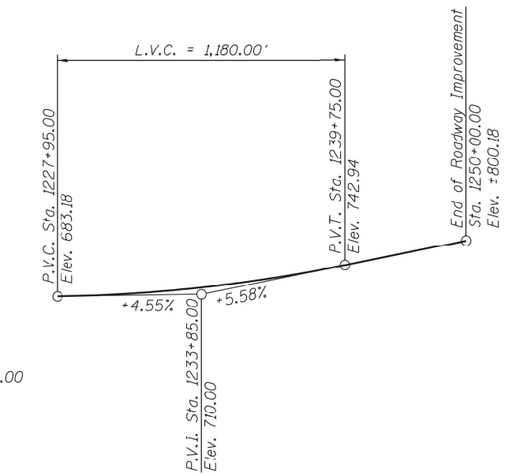

PROFILE GRADE

(Along Proposed ℄ IL 84/U.S. Rte. 20)

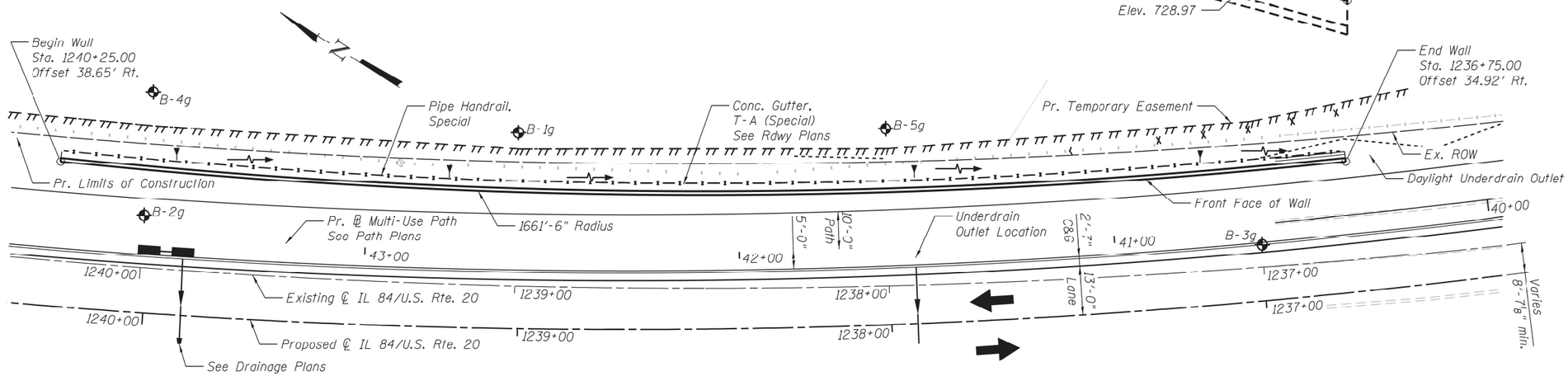

PLAN

Stations and offsets are measured from Proposed ℄ IL 84/U.S. Rte. 20 to Proposed Ground Line at Front Face of Wall.

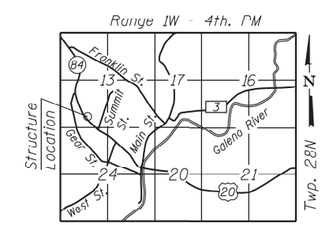

LOCATION SKETCH

CURVE DATA

Prop. Curve 71280
P.I. Sta. = 1239+48.14
Δ = 27° 24' 59" (RT)
D = 3° 00' 56"
R = 1,900.00'
T = 463.46'
L = 909.16'
E = 55.71'
P.C. Sta. = 1234+84.69
P.T. Sta. = 1243+93.85

DESIGN SPECIFICATIONS

2017 AASHTO LRFD Bridge Design Specifications, 8th Edition

GENERAL PLAN & ELEVATION
IL 84/U.S. ROUTE 20
F.A.P. RTE. 301 - SEC. 29R-1
JO DAVIESS COUNTY
STATION 1236+75.00 TO 1240+25.00
WALL M

MODEL: Wall_N-D2648B0-001
FILE NAME: E:\1019\Struct\Wall M3- Final Plans\CADD_Sheets\Wal_M-D2648B0.dgn

10/14/2021 12:50:34 PM

LIN ENGINEERING, LTD.
Consulting Engineers
Springfield, Illinois

USER NAME = LIN06-PC	DESIGNED - AML	REVISED -	
	CHECKED - VPT	REVISED -	
PLOT TIME = 12:50:34 PM	DRAWN - AML	REVISED -	
PLOT DATE = 10/14/2021	CHECKED - VPT	REVISED -	

STATE OF ILLINOIS
DEPARTMENT OF TRANSPORTATION

GENERAL PLAN AND ELEVATION
WALL M

SHEET 1 OF 2 SHEETS

F.A.P. RTE.	SECTION	COUNTY	TOTAL SHEETS	SHEET NO.
301	29R-1	JO DAVIESS	679	339
		CONTRACT NO. 64880		
	ILLINOIS	FED. AID PROJECT		

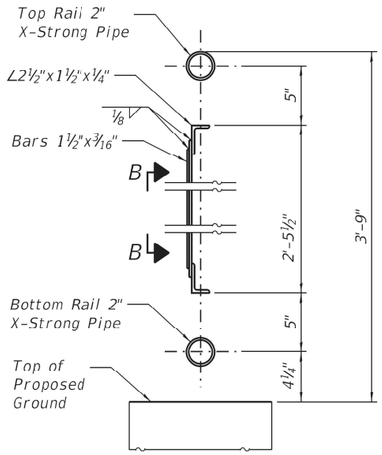

SECTION A-A

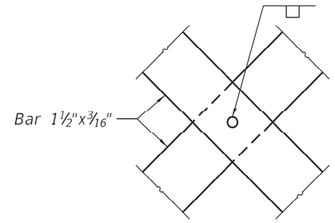

VIEW B-B

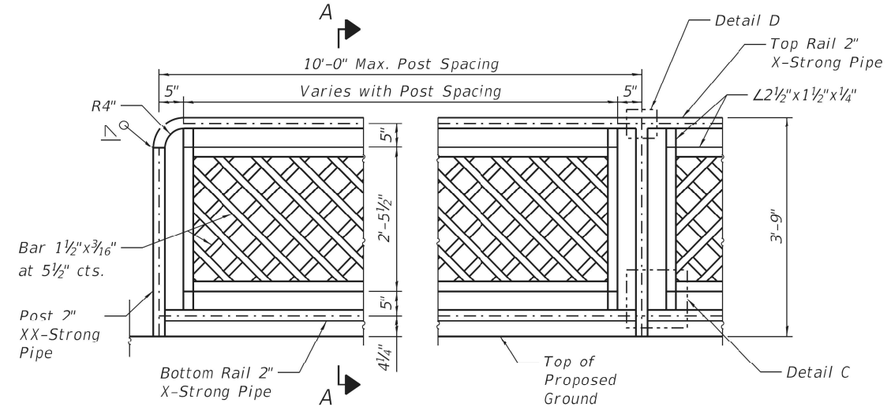

ELEVATION - PIPE HANDRAIL, SPECIAL

TOTAL BILL OF MATERIAL

Item	Unit	Total
Geocomposite Wall Drain	Sq.Yd.	202
Pipe Handrail, Special	Foot	341.0
Retaining Wall, Special	Sq.Ft.	2,127
Pipe Underdrains for Structures 4"	Foot	344

PIPE HANDRAIL, SPECIAL LOCATION

Point	Station	Offset
Begin	1240+24.42	41.64' Rt.
End	1236+76.28	37.92' Rt.

Radius = 1658'-6"

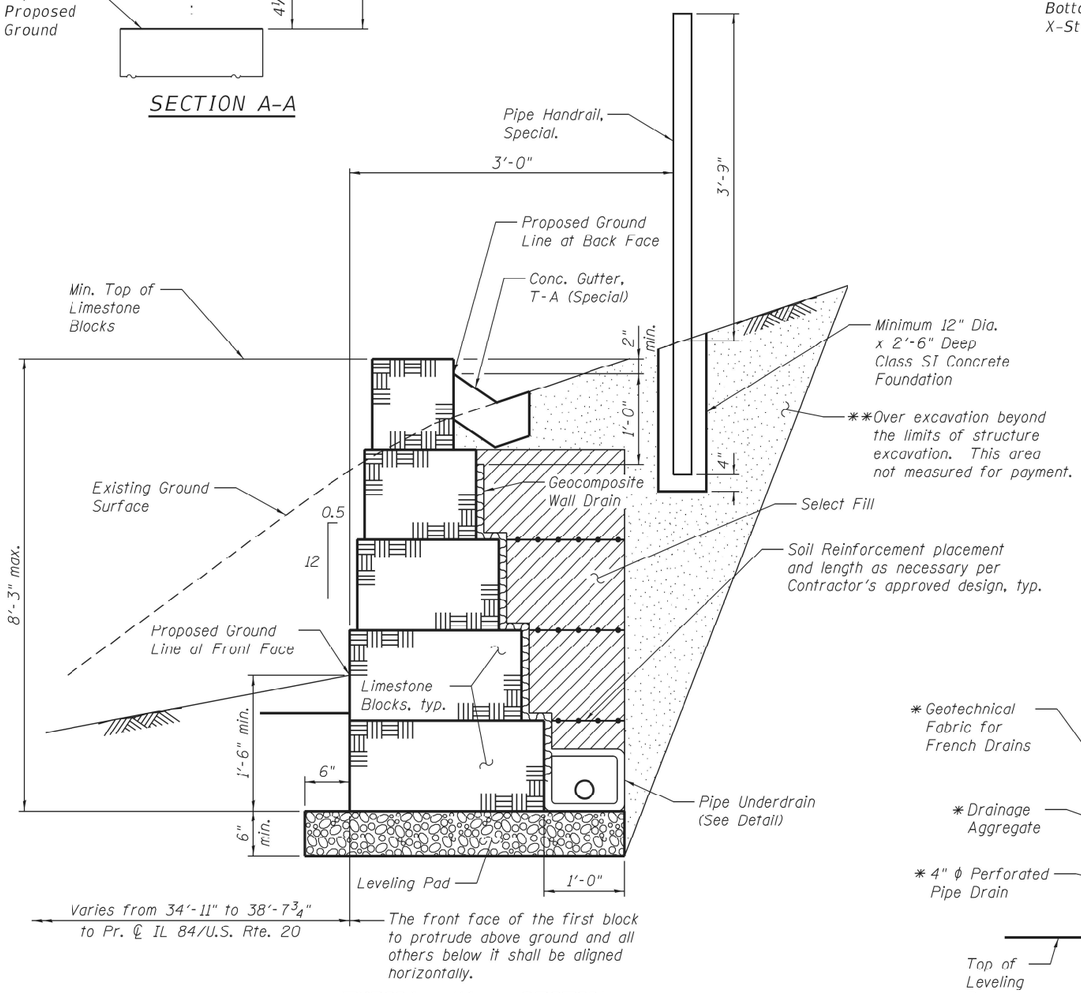

TYPICAL WALL SECTION

** Backfill remainder of structure excavation and over excavation with same material specified for select fill.

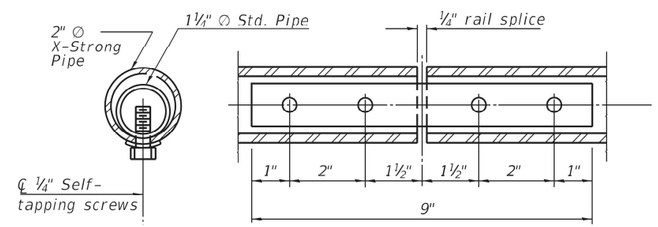

RAIL SPLICE

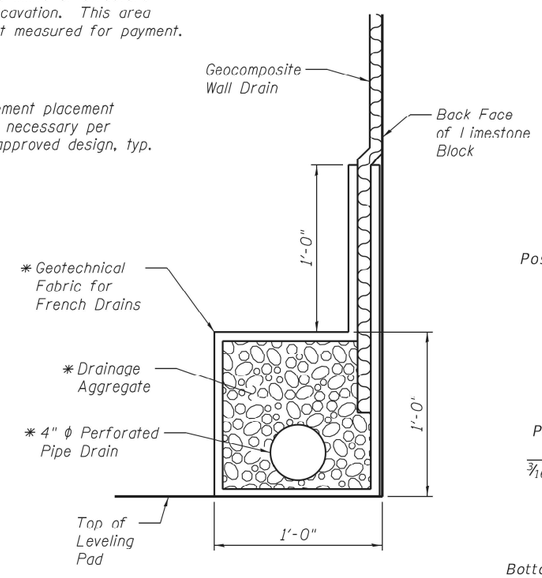

PIPE UNDERDRAIN DETAIL

* Included in the cost of Pipe Underdrains for Structures 4".

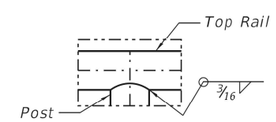

DETAIL D

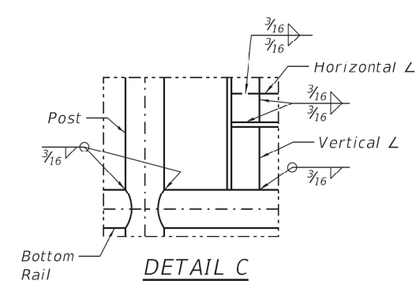

DETAIL C

Notes:

Gripping surfaces shall be uninterrupted by posts, other construction elements, or obstructions.

Ends of handrail shall be rounded.

Handrail shall not rotate within their fittings.

Handrail shall conform to Section 509 of the Standard Specifications, with the exception that all pipe and connections shall be welded, galvanized or aluminum, according to Article 1006.30 or 1006.34.

All posts, railing, splices, anchor devices, and plates shall be painted black using the Inorganic Zinc Rich Primer / Acrylic / Acrylic System for shop and field painting of new structural steel.

Fasteners shall be mechanically galvanized in painted areas.

Post spacing between the points shown in the table is at the discretion of the fabricator, in order to provide an aesthetically pleasing and cost effective design. Spacing of posts shall not exceed 10'-0".

Posts and vertical bars shall be fabricated to be plumb when installed on the retaining wall. Angle the horizontal rails as necessary to follow the vertical profile of the top of retaining wall.

Posts shall be placed in Class SI Conrete Foundation as shown in the Typical Wall Section. Concrete Foundation shall be included in the cost of Pipe Handrail, Special.

The Contractor shall be responsible for field verification of all horizontal and vertical geometry prior to fabrication of the handrail.

Handrail shall satisfy the loading requirements of Section 13.8.2 of the 2017 AASHTO LRFD Bridge Design Specifications, 8th Edition for Pedestrian Railing.

Member sizes shown are for estimating purposes only. The Contractor shall provide design calculations sealed by a Structural Engineer licensed in the State of Illinois with the actual member sizes used for fabrication.

Clear space between elements of the railing shall not allow the passage of a sphere greater than 4" in diameter.

This work shall consist of designing, furnishing, galvanizing, painting, and erecting handrails as listed above and according to these plans. This work shall be paid for at the contract unit price per FOOT for PIPE HANDRAIL, SPECIAL.

MODEL: Wall_N-D2640800-002
FILE NAME: E:\0193\Struct\Wall M\3. Final Plans\CADD_Sheets\Wal_M-D2640800.dgn

LIN ENGINEERING, LTD.
Consulting Engineers
Springfield, Illinois

USER NAME = LIN06-PC	DESIGNED - AML	REVISED -	
	CHECKED - VPT	REVISED -	
PLOT TIME = 12:50:35 PM	DRAWN - AML	REVISED -	
PLOT DATE = 10/14/2021	CHECKED - VPT	REVISED -	

STATE OF ILLINOIS
DEPARTMENT OF TRANSPORTATION

DETAILS
WALL M

SHEET 2 OF 2 SHEETS

F.A.P. RTE.	SECTION	COUNTY	TOTAL SHEETS	SHEET NO.
301	29R-1	JO DAVIESS	679	340
		CONTRACT NO. 64880		
	ILLINOIS	FED. AID PROJECT		

10/14/2021 12:50:35 PM

Benchmark: Headwall at Sta. 1227+99.96, 35.85' Lt. of existing ℄ IL 84/U.S. Rte. 20, Elev. 682.42.

Existing Structure: Existing retaining wall was constructed at an unknown date and is of historical significance. Existing retaining wall is 169'-3" in total length measured along the front face of the wall. It is composed of historic stone blocks. 123'-3" of the existing wall is to be carefully deconstructed and salvaged and will become the property of the City of Galena. Contractor shall deliver salvaged stone to the City, at a time and location to be coordinated with the City Engineer, Andy Lewis, available at (815) 777-1050 or alewis@cityofgalena.org.

Northbound traffic will be maintained on IL 84/U.S. Rte. 20 using stage construction, while Southbound traffic will be detoured along Gear St. Summit St. will be closed to thru traffic during construction.

APPROVED
For Structural Adequacy Only
Engineer of Bridges & Structures

LICENSED STRUCTURAL ENGINEER
VINCENT P. TABOR
081-007047
STATE OF ILLINOIS

Vincent P. Tabor 10/14/2021

Vincent P. Tabor — Date
Licensed Structural Engineer
State of Illinois No. 081-007047
Expires 11/30/2022

LEGEND

- Boring
- Const. Jt.
- Exp. Jt.
- Ex. Sign
- Pr. Inlet
- Ex. Water
- Pr. Water
- Ex. Lightpole
- Ex. Manhole
- Pr. Manhole
- Ex. Power Pole
- Ex. Sanitary Sewer
- Ex. Storm Sewer
- Ex. Drainage Tile
- Pr. Storm Sewer
- Pr. Sanitary Sewer
- Rock Depth Probe

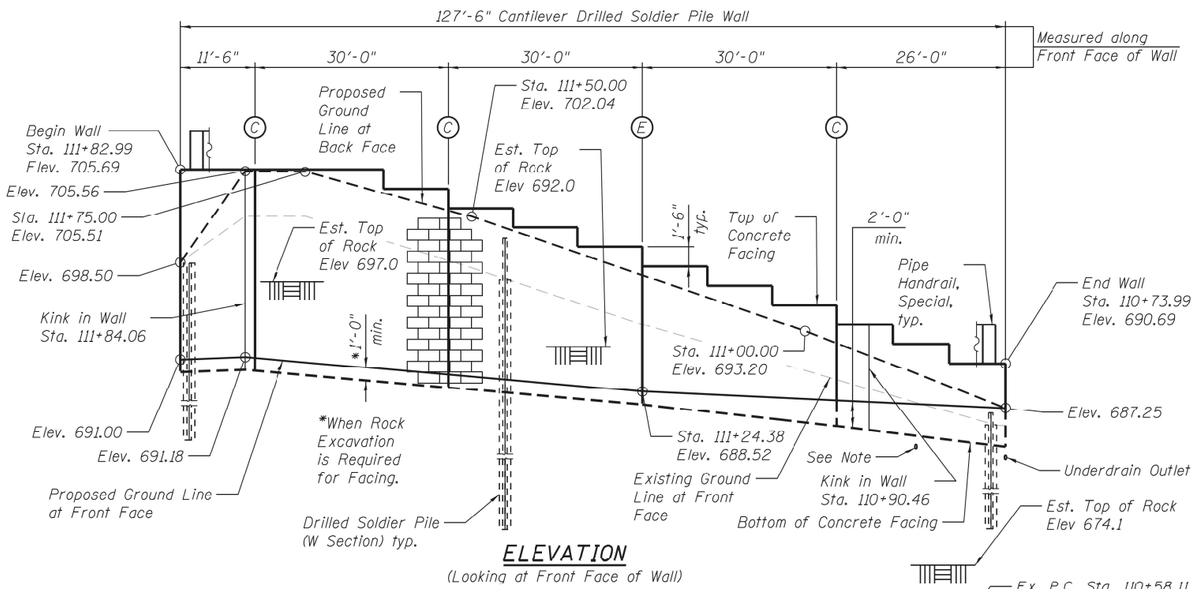

ELEVATION
(Looking at Front Face of Wall)

Note:
Proposed Water Line to be located in field to miss soldier piles. See Water Main Plans.

INDEX OF SHEETS

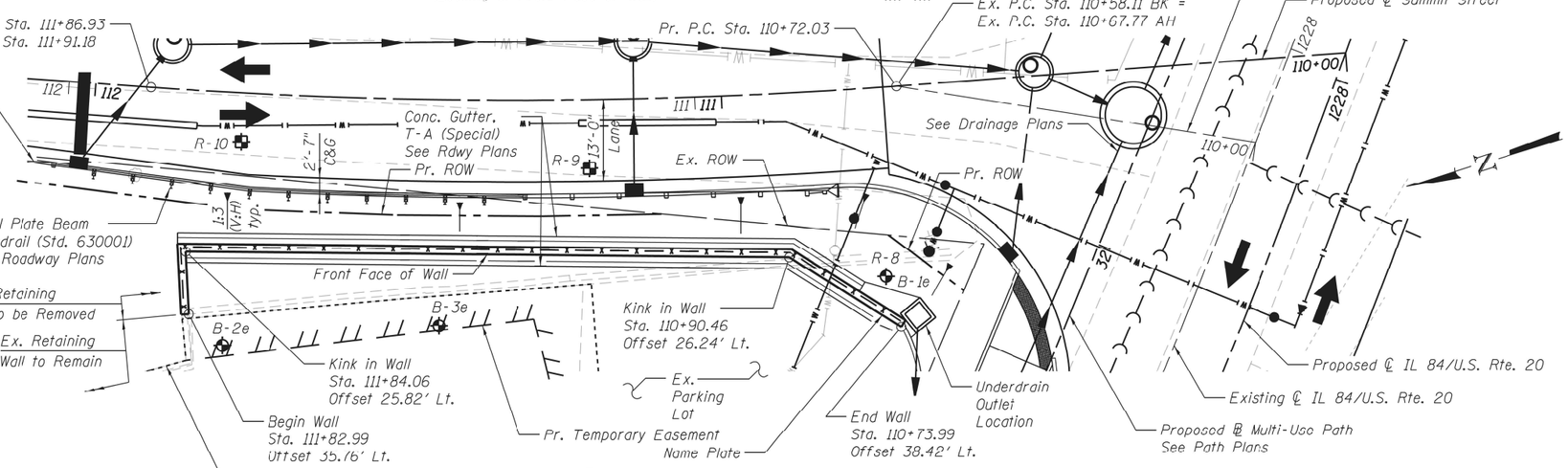

PLAN
Stations and offsets are measured from Proposed ℄ Summit St. to Front Face of Wall.

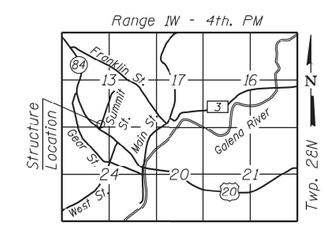

LOCATION SKETCH

CURVE DATA
(Summit Street)

Prop. Curve 70210
P.I. Sta. = 111+31.71
Δ = 8° 15' 25" (RT)
D = 6° 55' 47"
R = 826.82'
T = 59.68'
L = 119.16'
E = 2.15'
P.C. Sta. = 110+72.03
P.T. Sta. = 111+91.18

CURVE DATA
(IL 84/U.S. Rte. 20)

Prop. Curve 71270
P.I. Sta. = 1228+20.16
Δ = 15° 52' 55" (RT)
D = 4° 35' 01"
R = 1250.00'
T = 174.36'
L = 346.49'
E = 12.10'
P.C. Sta. = 1226+45.79
P.T. Sta. = 1229+92.28

DESIGN SPECIFICATIONS
2017 AASHTO LRFD Bridge Design Specifications, 8th Edition

DESIGN STRESSES
FIELD UNITS
f'c = 3,500 psi
fy = 60,000 psi (Reinforcement)
fy = 50,000 psi (M270 Grade 50)

GENERAL PLAN & ELEVATION
IL 84/U.S. ROUTE 20
F.A.P. RTE. 301 - SEC. 29R-1
JO DAVIESS COUNTY
STATION 110+73.99 TO 111+82.99
STRUCTURE NO. 043-7011

MODEL: GPE
FILE NAME: E:\1013\Struct\Wall N14, Final Design\Design Plans(CAD)_Sheets\0437011-D264880-001-GPE.dgn

LIN ENGINEERING, LTD.
Consulting Engineers
Springfield, Illinois

USER NAME = LIN06-PC	DESIGNED - AML	REVISED -	
	CHECKED - VPT	REVISED -	
PLOT TIME = 12:50:36 PM	DRAWN - AML	REVISED -	
PLOT DATE = 10/14/2021	CHECKED - VPT	REVISED -	

STATE OF ILLINOIS
DEPARTMENT OF TRANSPORTATION

GENERAL PLAN AND ELEVATION
S.N. 043-7011
SHEET 1 OF 10 SHEETS

F.A.P. RTE.	SECTION	COUNTY	TOTAL SHEETS	SHEET NO.
301	29R-1	JO DAVIESS	679	341
		CONTRACT NO. 64880		
		ILLINOIS	FED. AID PROJECT	

10/14/2021 12:50:36 PM

SUGGESTED SEQUENCE OF CONSTRUCTION

1. Complete Structure Excavation to the top of Soldier Piles.
2. Drill shaft excavations for Soldier Piles to specified tip elevations, maintaining required tolerances and hole stability.
3. Remove loose material and excess water from excavated shafts, and set Soldier Pile in hole, using temporary bracing to maintain correct elevation, clearances, and position during and after placement of concrete.
4. Place encasement concrete around Soldier Pile to the level of the base of the proposed Concrete Facing.
5. Place Controlled Low Strength Material (C.L.S.M.) around Soldier Pile to the top of the ground surface.
6. Excavate the soil in front of the wall to proposed grade, with simultaneous removal of C.L.S.M. at the face of the Soldier Piles and placement of lagging as required.
7. Construct wall drainage features, including underdrain at the base of wall.
8. Place Shear Studs on Soldier Piles and construct concrete facing.
9. Complete final grading at the base and top of the wall.

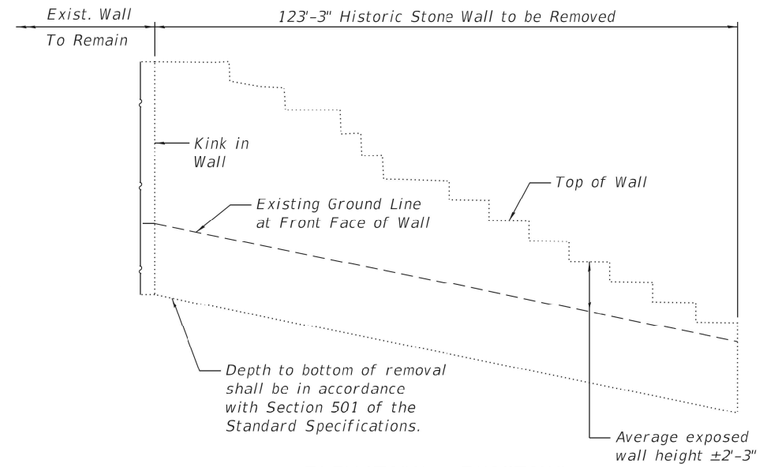

ELEVATION - EXISTING WALL TO BE REMOVED

Paid for as Retaining Wall Removal. See Special Provisions.

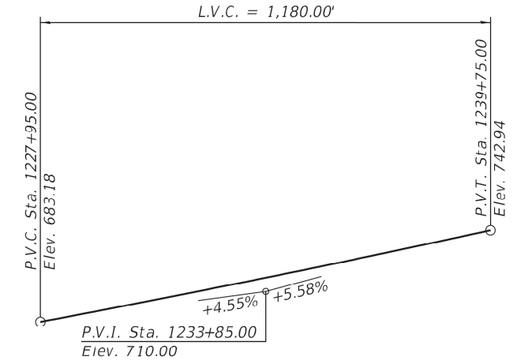

PROFILE GRADE

(Along Proposed ℄ IL 84/U.S. Rte. 20)

TOTAL BILL OF MATERIAL

ITEM	UNIT	TOTAL
Structure Excavation	Cu. Yd.	65
Rock Excavation for Structures	Cu. Yd.	50
Protective Coat	Sq. Yd.	216
Stud Shear Connectors	Each	426
Reinforcement Bars, Epoxy Coated	Pound	7,770
Name Plates	Each	1
Furnishing Soldier Piles (W Section)	Foot	433
Drilling and Setting Soldier Piles (In Soil)	Cu. Ft.	730
Drilling and Setting Soldier Piles (In Rock)	Cu. Ft.	1,472
Untreated Timber Lagging	Sq. Ft.	1,067
Concrete Structures	Cu. Yd.	72.0
Geocomposite Wall Drain	Sq. Yd.	80
Form Liner Textured Surface, Special	Sq. Ft.	1,474
Retaining Wall Removal	Foot	124
Staining Concrete Structures	Sq. Ft.	1,474
Pipe Handrail, Special	Foot	126.5
Pipe Underdrains for Structures 4"	Foot	128

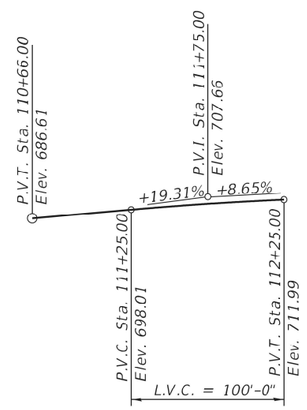

PROFILE GRADE

(Along Proposed ℄ Summit St.)

GENERAL NOTES

1. Reinforcement Bars designated (E) shall be Epoxy Coated.
2. All exposed concrete edges shall have a ¾" X 45° chamfer, except where shown otherwise. Chamfer on vertical edges shall be continued a minimum of one foot below finished ground level.
3. Reinforcement Bar bending dimensions are out to out.
4. No field welding is permitted except as specified in the contract documents.
5. No construction joints except those shown on the plans will be allowed unless approved by the engineer.
6. It shall be the contractor's responsibility to verify the location of all utilities prior to starting construction. Contact J.U.L.I.E., 800-892-0123.
7. The Contractor shall use care when excavating around existing foundations, retaining walls, and other structures. Any damage to the existing structure and/or supporting foundation shall be repaired or replaced at the Contractor's expense.
8. The Contractor is responsible for the design and performance of the lagging using no less than a 3 in. nominal rough sawn thickness and timber with a minimum allowable bending stress of 1000 psi.
9. Construction vibration monitoring shall be performed in accordance with the contract Special Provisions.
10. Apply protective coat to exposed surface of back face of the Concrete Facing, and to the entire top and front face surfaces of the Concrete Facing.

TYPICAL CONTROL POINT LOCATION

PANEL	C.P. NO.	STATION	OFFSET
1	1	111+82.99	35.76 Lt.
	2	111+82.61	25.75 Lt.
2	3	111+53.51	24.76 Lt.
3	4	111+24.38	24.83 Lt.
4	5	110+95.29	25.95 Lt.
5	6	110+73.99	38.42 Lt.

Stations and offsets are measured from Proposed ℄ Summit St. to Front Face of Wall.

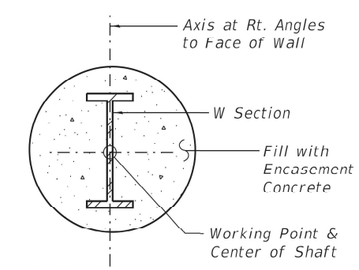

SECTION THRU ENCASEMENT

STATION 110+74
TO STATION 111+83
BUILT BY
STATE OF ILLINOIS
F.A.P. RTE. 301 SEC. 29R-1
STR. NO. 043-7011

NAME PLATE

See Std. 515001

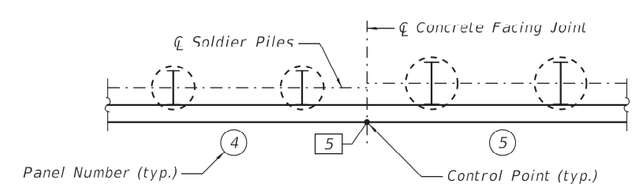

LEGEND

Panel Number (X)
Control Point [X]
Pile Number (XX)

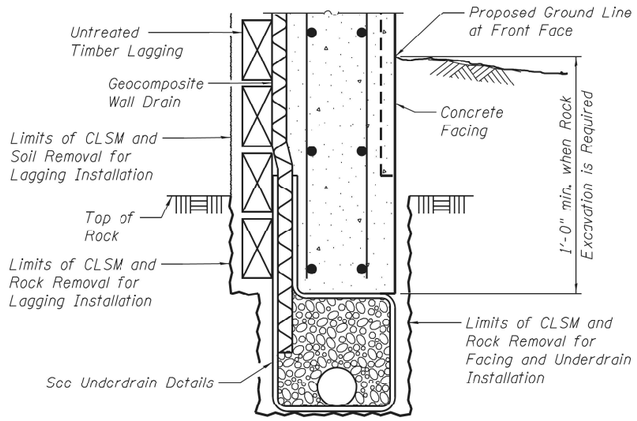

PARTIAL SECTION THRU SOLDIER PILE WALL
WHEN ROCK EXCAVATION IS REQUIRED

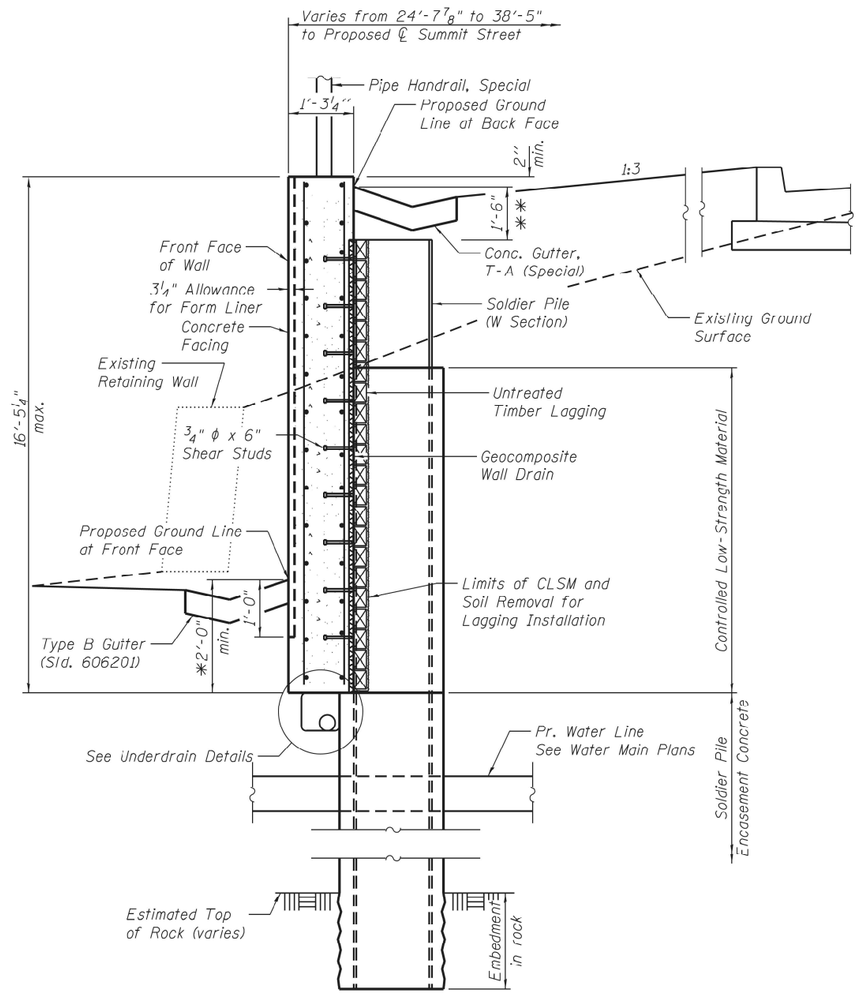

SECTION THRU
SOLDIER PILE WALL

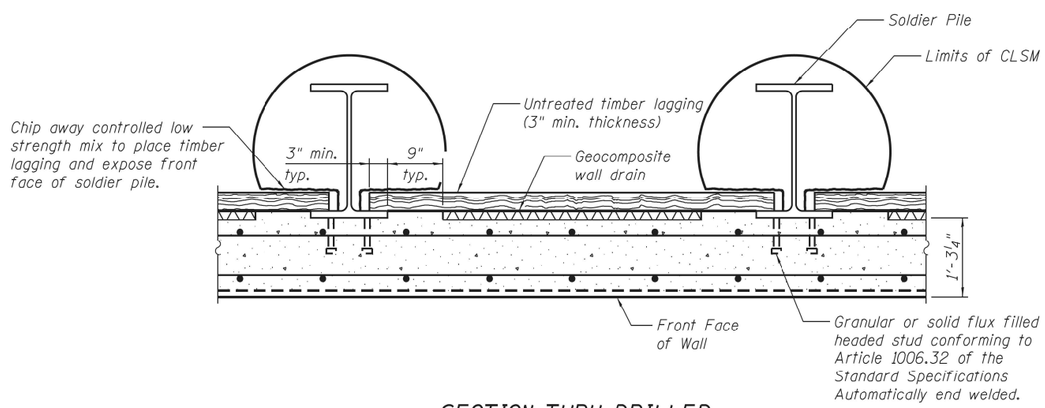

SECTION THRU DRILLED
SOLDIER PILE WALL

* 1'-0" min. when Rock Excavation is required for facing.

** 1'-0" for piles 1 and 18 thru 21.

MODEL: Typical Sections
FILE NAME: E:\1019\Struct\Wall N\4. Final Design\Design Plans\CA3D_Sheets\0437011-D264880-003-Typ Sections.dgn

LIN ENGINEERING, LTD. Consulting Engineers Springfield, Illinois	USER NAME = LIN06-PC	DESIGNED - AML	REVISED -	STATE OF ILLINOIS DEPARTMENT OF TRANSPORTATION	TYPICAL SECTIONS S.N. 043-7011
		CHECKED - VPT	REVISED -		
	PLOT TIME = 12:50:40 PM	DRAWN - AML	REVISED -		
	PLOT DATE = 10/14/2021	CHECKED - VPT	REVISED -		SHEET 3 OF 10 SHEETS

F.A.P. RTE.	SECTION	COUNTY	TOTAL SHEETS	SHEET NO.
301	29R-1	JO DAVIESS	679	343
		CONTRACT NO. 64880		
	ILLINOIS	FED. AID PROJECT		

10/14/2021 12:50:40 PM

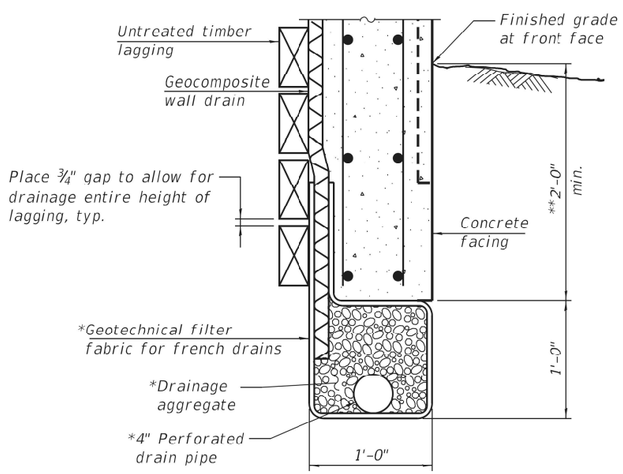

BETWEEN SOLDIER PILES

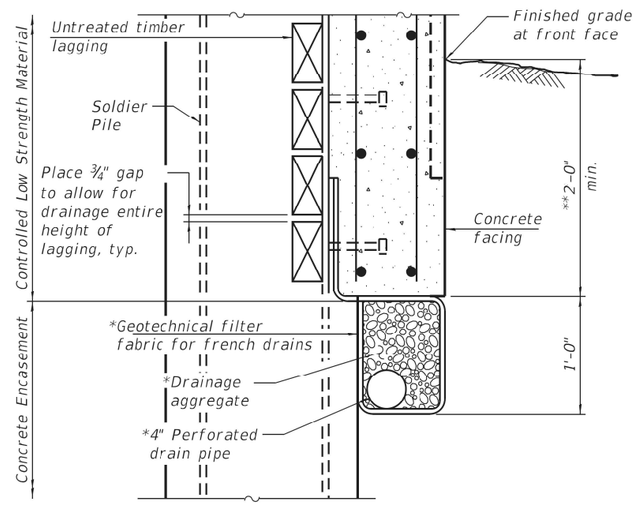

AT SOLDIER PILES

UNDERDRAIN DETAIL FOR SOLDIER PILE WALLS

*Included in the cost of Pipe Underdrains for Structures 4".
**1'-0" min. when Rock Excavation is required.

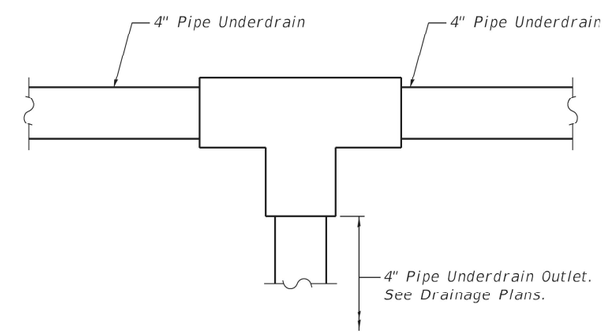

PIPE UNDERDRAIN OUTLET

See Sheet 1 of 10 for outlet locations.

MODEL: Default
FILE NAME: E:\01B\StructWall N\4. Final Design\Design Plans\CAD_Sheets\0437011-D264880-004-Drain Details.dgn

LIN ENGINEERING, LTD.
Consulting Engineers
Springfield, Illinois

USER NAME = LIN06-PC	DESIGNED - AML	REVISED -	
	CHECKED - VPT	REVISED -	
PLOT TIME = 12:50:41 PM	DRAWN - AML	REVISED -	
PLOT DATE = 10/14/2021	CHECKED - VPT	REVISED -	

STATE OF ILLINOIS
DEPARTMENT OF TRANSPORTATION

DRAIN DETAILS
S.N. 043-7011

SHEET 4 OF 10 SHEETS

F.A.P. RTE.	SECTION	COUNTY	TOTAL SHEETS	SHEET NO.
301	29R-1	JO DAVIESS	679	344
		CONTRACT NO. 64880		
		ILLINOIS	FED. AID PROJECT	

10/14/2021 12:50:41 PM

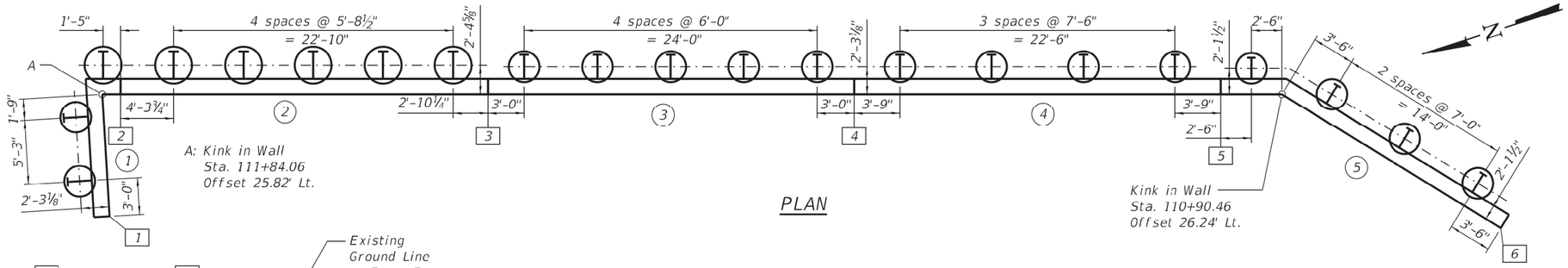

PLAN

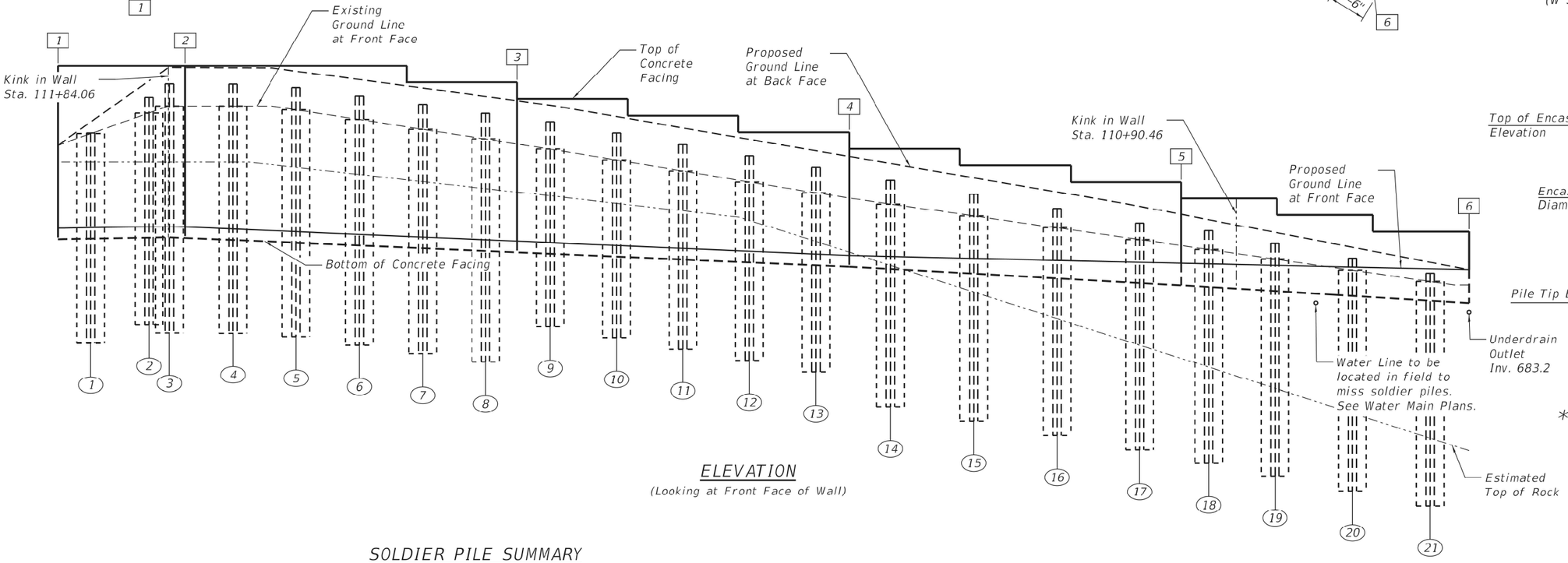

ELEVATION

(Looking at Front Face of Wall)

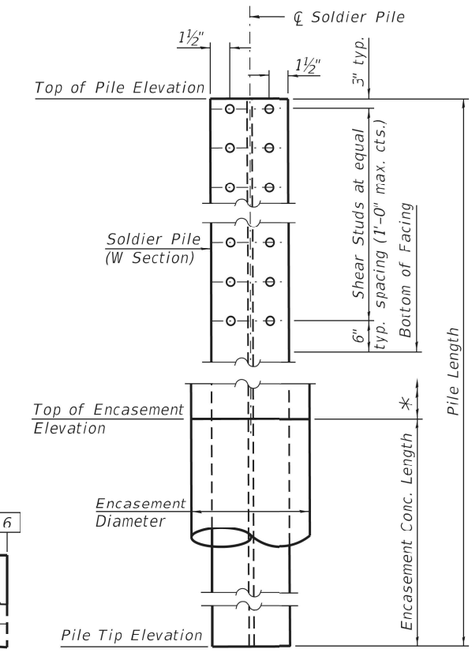

SOLDIER PILE ELEVATION AND SHEAR STUD CONNECTION DETAILS

* Controlled Low-Strength Material

SOLDIER PILE SUMMARY

Panel	Pile No.	Station	Offset to Working Point (ft)	Pile Size	Shaft Diameter (ft)	Top of Soldier Pile Elevation	Pile Tip Elevation	Estimated Length of Soldier Pile	Top of Encasement Concrete	Est. Top of Rock Elevation	Number of Shear Connectors
1	1	111+85.46	33.03 Lt.	W24x68	2.50	699.62	680.62	19.00 ft	690.05	697.00	20
	2	111+86.04	27.82 Lt.	W24x68	2.50	702.82	682.32	20.50 ft	690.15	697.00	26
	3	111+84.11	23.44 Lt.	W27x84	3.00	704.06	681.56	22.50 ft	690.18	697.00	30
2	4	111+78.53	23.16 Lt.	W27x84	3.00	704.03	681.53	22.50 ft	689.93	697.00	30
	5	111+72.99	22.92 Lt.	W27x84	3.00	703.72	681.22	22.50 ft	689.68	696.52	30
	6	111+67.43	22.71 Lt.	W27x84	3.00	702.95	680.45	22.50 ft	689.43	695.88	28
	7	111+61.88	22.55 Lt.	W27x84	3.00	702.18	679.68	22.50 ft	689.19	695.23	28
	8	111+56.32	22.42 Lt.	W27x84	3.00	701.41	678.91	22.50 ft	688.94	694.59	26
3	9	111+50.62	22.46 Lt.	W24x68	2.50	700.62	682.12	18.50 ft	688.69	693.93	26
	10	111+44.78	22.41 Lt.	W24x68	2.50	699.62	681.12	18.50 ft	688.43	693.26	24
	11	111+38.94	22.40 Lt.	W24x68	2.50	698.59	680.09	18.50 ft	688.17	692.58	22
	12	111+33.10	22.44 Lt.	W24x68	2.50	697.56	679.06	18.50 ft	687.91	691.72	20
	13	111+27.26	22.51 Lt.	W24x68	2.50	696.53	678.03	18.50 ft	687.65	689.80	20
4	14	111+20.69	22.65 Lt.	W24x68	2.50	695.37	674.87	20.50 ft	687.31	687.64	18
	15	111+13.39	22.87 Lt.	W24x68	2.50	694.08	673.58	20.50 ft	686.89	685.25	16
	16	111+06.10	23.15 Lt.	W24x68	2.50	692.80	672.30	20.50 ft	686.47	682.85	14
	17	110+98.81	23.50 Lt.	W24x68	2.50	691.49	670.99	20.50 ft	686.05	680.45	12
5	18	110+92.75	23.97 Lt.	W21x48	2.50	690.78	669.78	21.00 ft	685.69	678.45	12
	19	110+86.49	26.50 Lt.	W21x48	2.50	689.62	668.62	21.00 ft	685.32	676.53	10
	20	110+80.97	30.55 Lt.	W21x48	2.50	688.27	667.27	21.00 ft	684.89	674.29	8
	21	110+75.50	34.64 Lt.	W21x48	2.50	686.92	665.92	21.00 ft	684.46	672.05	6

Notes:

1. Rock Elevations at each pile are estimated by interpolating between rock elevations provided in soil boring logs and rock probes.
2. Stations and offsets are measured from ℄ Summit St.

LEGEND

Panel Number (X)

Control Point [X]

Pile Number (XX)

MODEL: Default
FILE NAME: E:\0181\Struct\Wall N14. Final Design\Design Plans\CAD_Sheets\0437011-D264880-005-Piles 1.dgn

10/14/2021 12:50:42 PM

LIN ENGINEERING, LTD.
Consulting Engineers
Springfield, Illinois

USER NAME = LIN06-PC	DESIGNED - AML	REVISED -	
	CHECKED - VPT	REVISED -	
PLOT TIME = 12:50:42 PM	DRAWN - AML	REVISED -	
PLOT DATE = 10/14/2021	CHECKED - VPT	REVISED -	

STATE OF ILLINOIS
DEPARTMENT OF TRANSPORTATION

SOLDIER PILES
S.N. 043-7011

SHEET 5 OF 10 SHEETS

F.A.P. RTE.	SECTION	COUNTY	TOTAL SHEETS	SHEET NO.
301	29R-1	JO DAVIESS	679	345
		CONTRACT NO. 64880		
	ILLINOIS	FED. AID PROJECT		

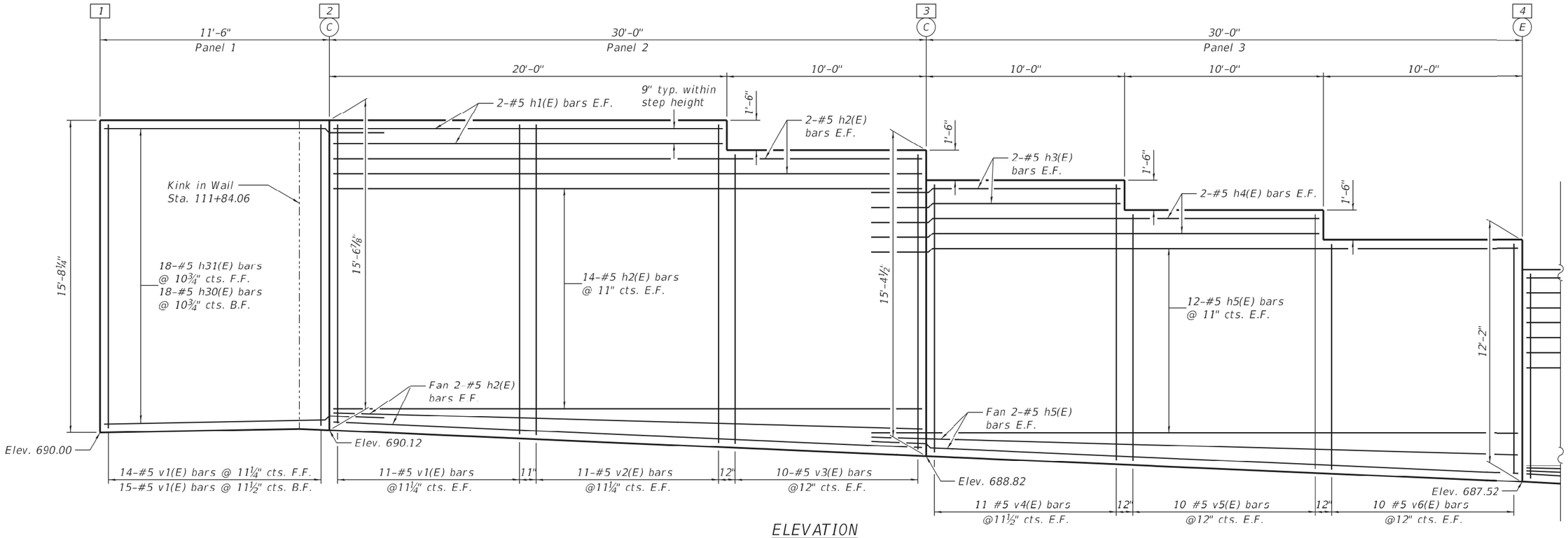

ELEVATION

Concrete Facing Panels 1 thru 3
(Looking at Front Face of Wall)

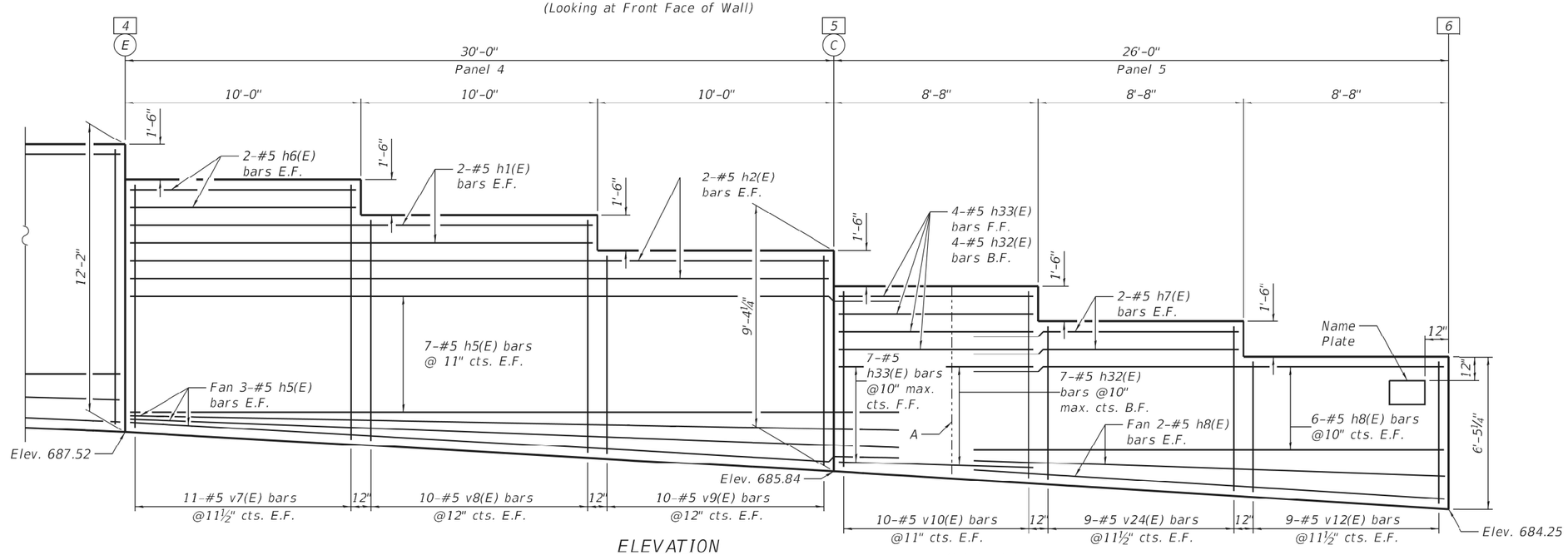

ELEVATION

Concrete Facing Panels 4 thru 5
(Looking at Front Face of Wall)

A: Kink in Wall
Sta. 110+90.46

MIN. BAR LAP

#5 bars = 3'-7"

X	Control Point
C	Construction Joint
E	Expansion Joint
B.F.	Back Face
E.F.	Each Face
F.F.	Front Face

MODEL: Default
FILE NAME: E:\1018\Struct\Wall N14. Final Design\Design Plans\CADD_Sheets\0437011-D2564880-006-Facing 1.dgn

LIN ENGINEERING, LTD.
Consulting Engineers
Springfield, Illinois

USER NAME = LIN06-PC	DESIGNED - AML	REVISED -	
	CHECKED - VPT	REVISED -	
PLOT TIME = 12:50:43 PM	DRAWN - AML	REVISED -	
PLOT DATE = 10/14/2021	CHECKED - VPT	REVISED -	

STATE OF ILLINOIS
DEPARTMENT OF TRANSPORTATION

CONCRETE FACING
S.N. 043-7011

SHEET 6 OF 10 SHEETS

F.A.P. RTE.	SECTION	COUNTY	TOTAL SHEETS	SHEET NO.
301	29R-1	JO DAVIESS	679	346
		CONTRACT NO. 64880		
		ILLINOIS	FED. AID PROJECT	

10/14/2021 12:50:43 PM

BILL OF MATERIAL

Bar	No.	Size	Length	Shape
h1(E)	8	#5	19'-8"	
h2(E)	40	#5	29'-8"	
h3(E)	4	#5	13'-7"	
h4(E)	4	#5	23'-7"	
h5(E)	48	#5	33'-8"	
h6(E)	4	#5	9'-8"	
h7(E)	4	#5	12'-3"	
h8(E)	16	#5	20'-11"	
h30(E)	18	#5	17'-4"	
h31(E)	18	#5	16'-1"	
h32(E)	11	#5	8'-10"	
h33(E)	11	#5	8'-6"	
v1(E)	51	#5	15'-1"	
v2(E)	22	#5	15'-7"	
v3(E)	20	#5	14'-6"	
v4(E)	22	#5	13'-5"	
v5(E)	20	#5	12'-5"	
v6(E)	20	#5	11'-4"	
v7(E)	22	#5	10'-3"	
v8(E)	20	#5	9'-4"	
v9(E)	20	#5	8'-5"	
v10(E)	20	#5	7'-5"	
v12(E)	18	#5	5' 6"	
v24(E)	18	#5	6'-6"	
Concrete Structures			Cu. Yd.	72.0
Reinforcement Bars, Epoxy Coated			Pound	7,770

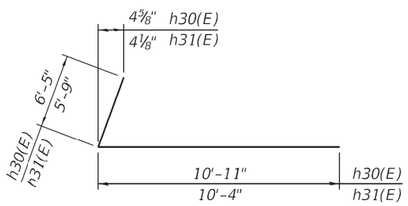

Bars h30(E) & h31(E)

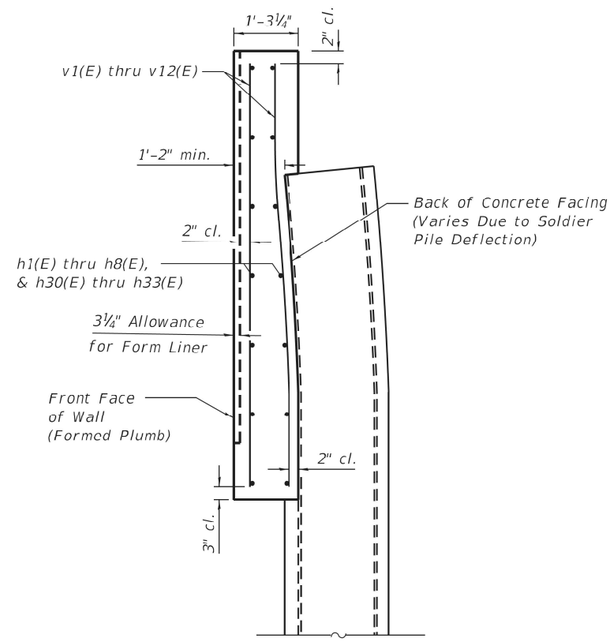

DEFLECTED PILE
SECTION THRU FACING

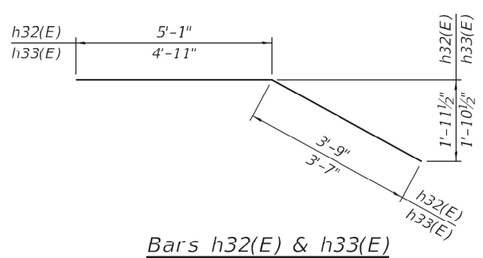

Bars h32(E) & h33(E)

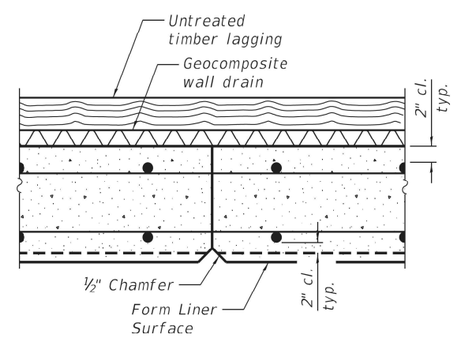

CONSTRUCTION JOINT

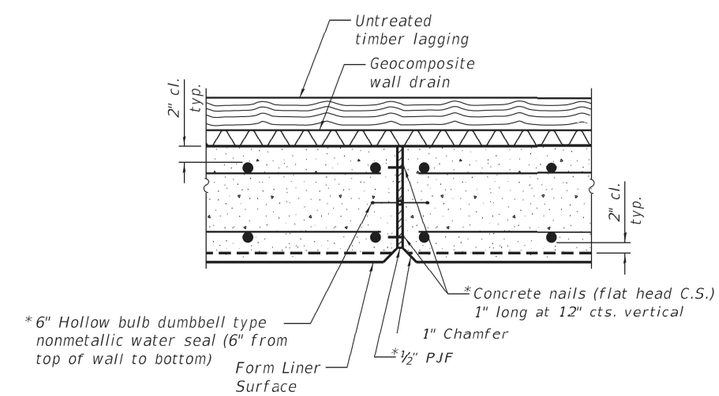

EXPANSION JOINT

* Cost included with Concrete Structures

Note:
Form liner to be Fast Formliners Co. pattern #15067, or SHPO approved equivalent. See Special Provision for Form Liner Textured Surface, Special.

MODEL: Default
FILE NAME: E:\0181Struct\Wall IN4. Final Design\Design Plans\CAD_Sheets\0437011-D2648800-007-facing 2.dgn

LIN ENGINEERING, LTD. Consulting Engineers Springfield, Illinois	USER NAME = LIN06-PC	DESIGNED - AML	REVISED -	STATE OF ILLINOIS DEPARTMENT OF TRANSPORTATION	CONCRETE FACING S.N. 043-7011
		CHECKED - VPT	REVISED -		
	PLOT TIME = 12:50:44 PM	DRAWN - AML	REVISED -		SHEET 7 OF 10 SHEETS
	PLOT DATE = 10/14/2021	CHECKED - VPT	REVISED -		

F.A.P. RTE.	SECTION	COUNTY	TOTAL SHEETS	SHEET NO.
301	29R-1	JO DAVIESS	679	347
		CONTRACT NO. 64880		
		ILLINOIS FED. AID PROJECT		

10/14/2021 12:50:44 PM

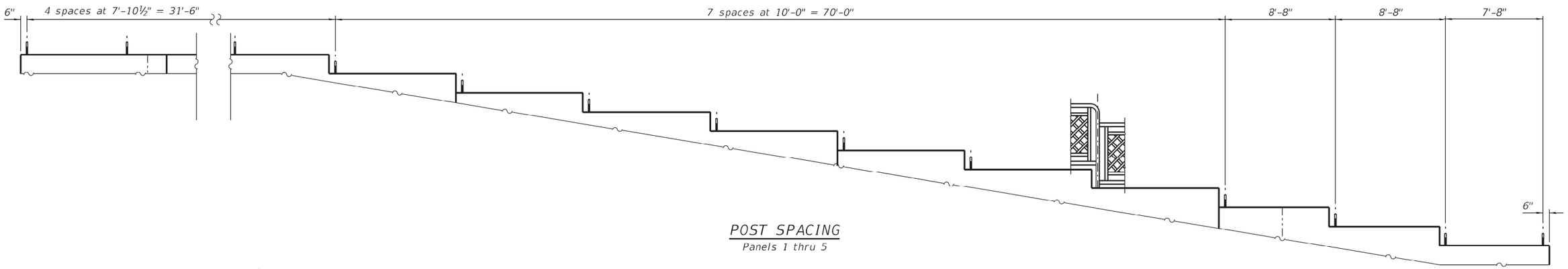

POST SPACING
Panels 1 thru 5

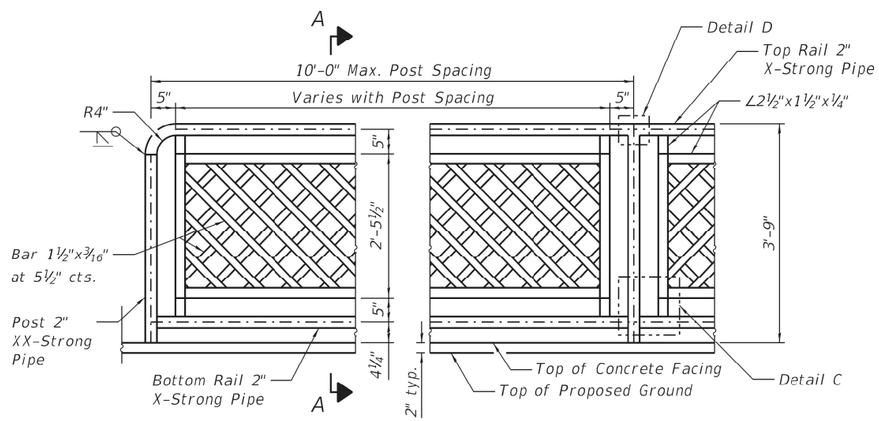

ELEVATION - PIPE HANDRAIL, SPECIAL

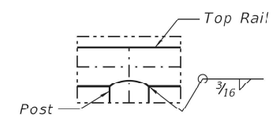

DETAIL D

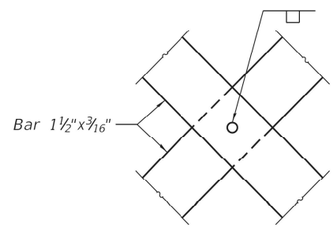

VIEW B-B

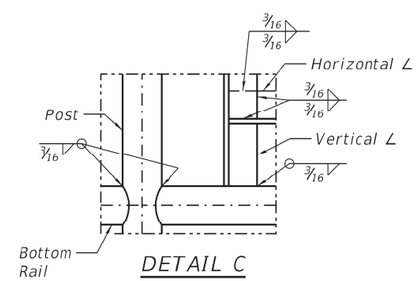

DETAIL C

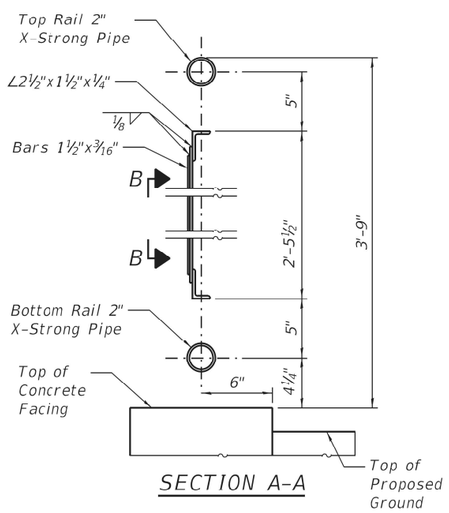

SECTION A-A

Core 3" ∅ Max. hole, 9" deep in top of concrete facing. Minimum core diameter shall allow adequate distribution of epoxy around embedded post in accordance with the epoxy manufacturer's specifications. Set post into cored hole and epoxy grout in place according to Article 584 of the Standard Specifications.

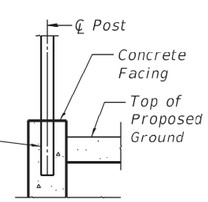

CONCRETE FACING ATTACHMENT

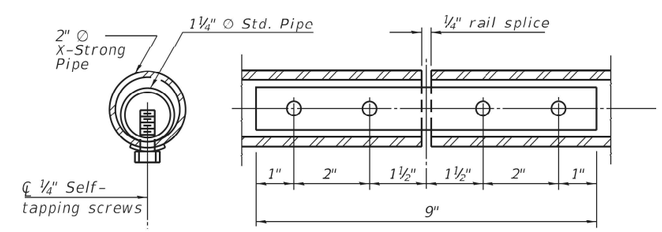

RAIL SPLICE

Notes:

Gripping surfaces shall be uninterrupted by posts, other construction elements, or obstructions.

Ends of handrail shall be rounded.

Handrail shall not rotate within their fittings.

Handrail shall conform to Section 509 of the Standard Specifications, with the exception that all pipe and connections shall be welded, galvanized or aluminum, according to Article 1006.30 or 1006.34.

All posts, railing, splices, anchor devices, and plates shall be painted black using the Inorganic Zinc Rich Primer / Acrylic / Acrylic System for shop and field painting of new structural steel.

Fasteners shall be mechanically galvanized in painted areas.

Post spacing shown may be adjusted at the discretion of the fabricator in order to provide an aesthetically pleasing and cost effective design. Spacing of posts shall not exceed 10'-0".

Posts and vertical bars shall be fabricated to be plumb when installed on the retaining wall. Angle the horizontal rails as necessary to follow the vertical profile of the top of retaining wall.

Costs of coring and epoxy grout for concrete facing attachment shall be included in the cost of Pipe Handrail, Special.

The Contractor shall be responsible for field verification of all horizontal and vertical retaining wall geometry and joints prior to fabrication of the handrail.

Handrail shall satisfy the loading requirements of Section 13.8.2 of the 2017 AASHTO LRFD Bridge Design Specifications, 8th Edition for Pedestrian Railing.

Member sizes shown are for estimating purposes only. The Contractor shall provide design calculations sealed by a Structural Engineer licensed in the State of Illinois with the actual member sizes used for fabrication.

Clear space between elements of the railing shall not allow the passage of a sphere greater than 4" in diameter.

This work shall consist of designing, furnishing, galvanizing, painting, and erecting handrails as listed above and according to these plans. This work shall be paid for at the contract unit price per FOOT for PIPE HANDRAIL, SPECIAL.

BILL OF MATERIAL

Item	Unit	Quantity
Pipe Handrail, Special	Foot	126.5

Illinois Department of Transportation
Division of Highways
Illinois Department of Transportation/D-2

SOIL BORING LOG

Page 1 of 1

ROUTE FA 301 DESCRIPTION P92-088-92 Retaining Wall #3: Summit Street, Gear Street to High Street Date 1/12/12 LOGGED BY Be. Wetzell

SECTION 29X-T LOCATION W. Galena Twp. - 13NW, SEC. , TWP. 28N, RNG. 1W

COUNTY JoDaviess DRILLING METHOD Hollow Stem Auger HAMMER TYPE CME-45 Automatic

STRUCT. NO.
Station 111+25

BORING NO. B-1e
Station 110+60
Offset 20.00ft Lt
Ground Surface Elev. 685.60 ft

Surface Water Elev. ft
Stream Bed Elev. ft

Groundwater Elev.:
First Encounter ft
Upon Completion ft
After Hrs. ft

Description	Elev.	DEPTH (ft)	BLOWS (/6")	UCS Qu (tsf)	MOIST (%)
STIFF brown SILTY CLAY LOAM				1.1 P	24.0
	683.60				
STIFF brown SILTY CLAY LOAM			3 3 5	2.7 P	24.0
	682.10				
MEDIUM brown SILTY CLAY LOAM		-5	3 3 4	1.0 P	20.0
	679.60				
SOFT brown SILTY LOAM			1 2 5	0.3 P	30.0
	677.10				
MEDIUM tan SILTY LOAM		-10	1 9 35	0.9 P	21.0
	674.60				
End of Boring		-15, -20			

The Unconfined Compressive Strength (UCS) Failure Mode is indicated by (B-Bulge, S-Shear, P-Penetrometer)
The SPT (N value) is the sum of the last two blow values in each sampling zone (AASHTO T206)

BBS, from 137 (Rev. 8-99)

Illinois Department of Transportation
Division of Highways
Illinois Department of Transportation/D-2

SOIL BORING LOG

Page 1 of 1

ROUTE FA 301 DESCRIPTION P92-088-92 Retaining Wall #3: Summit Street, Gear Street to High Street Date 1/12/12 LOGGED BY Be. Wetzell

SECTION 29X-T LOCATION W. Galena Twp. - 13NW, SEC. , TWP. 28N, RNG. 1W

COUNTY JoDaviess DRILLING METHOD Hollow Stem Auger HAMMER TYPE CME-45 Automatic

STRUCT. NO.
Station 111+25

BORING NO. B-2e
Station 111+75
Offset 40.00ft Lt
Ground Surface Elev. 691.80 ft

Surface Water Elev. ft
Stream Bed Elev. ft

Groundwater Elev.:
First Encounter ft
Upon Completion ft
After Hrs. ft

Description	Elev.	DEPTH (ft)	BLOWS (/6")	UCS Qu (tsf)	MOIST (%)
Weathered LIMESTONE					
Auger Refusal @ 2'					
	689.80				
End of Boring		-5, -10, -15, -20			

The Unconfined Compressive Strength (UCS) Failure Mode is indicated by (B-Bulge, S-Shear, P-Penetrometer)
The SPT (N value) is the sum of the last two blow values in each sampling zone (AASHTO T206)

BBS, from 137 (Rev. 8-99)

Illinois Department of Transportation
Division of Highways
Illinois Department of Transportation/D-2

SOIL BORING LOG

Page 1 of 1

ROUTE FA 301 DESCRIPTION P92-088-92 Retaining Wall #3: Summit Street, Gear Street to High Street Date 1/17/12 LOGGED BY By. Wetzell

SECTION 29X-T LOCATION W. Galena Twp. - 13NW, SEC. , TWP. 28N, RNG. 1W

COUNTY JoDaviess DRILLING METHOD Hollow Stem Auger HAMMER TYPE CME-45 Automatic

STRUCT. NO.
Station 111+25

BORING NO. B-3e
Station 111+40
Offset 35.00ft Lt
Ground Surface Elev. 690.30 ft

Surface Water Elev. ft
Stream Bed Elev. ft

Groundwater Elev.:
First Encounter ft
Upon Completion ft
After Hrs. ft

Description	Elev.	DEPTH (ft)	BLOWS (/6")	UCS Qu (tsf)	MOIST (%)
SOFT brown SANDY LOAM				0.3 P	
	688.80				
Borehole continued with rock coring.		-5, -10, -15, -20			

The Unconfined Compressive Strength (UCS) Failure Mode is indicated by (B-Bulge, S-Shear, P-Penetrometer)
The SPT (N value) is the sum of the last two blow values in each sampling zone (AASHTO T206)

BBS, from 137 (Rev. 8-99)

MODEL: Default
FILE NAME: E:\1019\Struct\Wall N4. Final Design\Design Plans\CADD_Sheets\0437011-D264880-009-Borings 1.dgn

LIN ENGINEERING, LTD.
Consulting Engineers
Springfield, Illinois

USER NAME = LIN06-PC	DESIGNED - AML	REVISED -	
	CHECKED - VPT	REVISED -	
PLOT TIME = 12:50:46 PM	DRAWN - AML	REVISED -	
PLOT DATE = 10/14/2021	CHECKED - VPT	REVISED -	

STATE OF ILLINOIS
DEPARTMENT OF TRANSPORTATION

BORING LOGS
S.N. 043-7011
SHEET 9 OF 10 SHEETS

F.A.P. RTE.	SECTION	COUNTY	TOTAL SHEETS	SHEET NO.
301	29R-1	JO DAVIESS	679	349
		CONTRACT NO. 64880		
		ILLINOIS FED. AID PROJECT		

10/14/2021 12:50:46 PM

Illinois Department of Transportation
Division of Highways
Illinois Department of Transportation/D-2

ROCK CORE LOG

Page 1 of 1

Date 1/17/12

ROUTE FA 301 DESCRIPTION PS2-088-92 Retaining Wall #3: Summit Street. Gear Street to High Street LOGGED BY By. Wetzell

SECTION 29X-T LOCATION W. Galena Twp. - 13NW, SEC. , TWP. 28N, RNG. 1W

COUNTY JoDaviess CORING METHOD

STRUCT. NO.
Station 111+25

CORING BARREL TYPE & SIZE

Core Diameter 2 in
Top of Rock Elev. 688.80 ft
Begin Core Elev. 688.80 ft

BORING NO. B-3e
Station 111+40
Offset 35.00ft Lt
Ground Surface Elev. 690.30 ft

		DEPTH (ft)	CORE (#)	RECOVERY (%)	R.Q.D. (%)	CORE TIME (min/ft)	STRENGTH (tsf)
Dolomite: tan-buff, mostly pitted, sometimes vuggy, very finely crystalline, dense, severely fractured. No testable segments.	688.80		1	45	8	1.2	
		-5					
	683.80						
Dolomite: as above. T.S.F.: 683.8 to 681.8			2	75	17	2	642.0
		-10					
	678.80						
Dolomite: as above. T.S.F.: 676.3 to 673.8			3	60	22	1.2	469.0
		-15					
	673.80						
End of Boring							
		-20					

Color pictures of the cores
Cores will be stored for examination until
The "Strength" column represents the uniaxial compressive strength of the core sample (ASTM D-2938)

BBS, form 138 (Rev. 8-99)

Illinois Department of Transportation

Soil Survey Data

Project:
Route: US 20
Section: 29R-1
County Jo Daviess

Logged By: Wally Garza

Date: 7/30/15 Sta.: 1219+45 (Elev. 661.5) Offset: 22' Lt of CL

Depth	Sample No.	Soil Type	Water	Can No.	Qu	Description of Soil Layer (Color, Moisture, Strength, Etc.)
1						
2						1st Encounter – 659.5
3						
4						Auger Refusal @ 659.5
5						
6						
7						
8						
9						
10						

Date: 7/31/15 B-1e Sta.: B-1e (Elev. 685.6) Offset: Same Hole

Depth	Sample No.	Soil Type	Water	Can No.	Qu	Description of Soil Layer (Color, Moisture, Strength, Etc.)
1						
2						1st Encounter – 674.1
3						
4						Auger Refusal @ 673.6
5						
6						
7						
8						
9						
10						

Date: 7/30/15 Sta.: 111+15 (Elev. 696.7) Offset: 9.5' Lt

Depth	Sample No.	Soil Type	Water	Can No.	Qu	Description of Soil Layer (Color, Moisture, Strength, Etc.)
1						
2						1st Encounter @ 695.2
3						
4						Auger Refusal @ 694.2
5						
6						
7						8" Asphalt
8						
9						
10						

Qu: 0-.25 Very Soft; .25-.5 Soft; .5-1.0 Medium; 1.0-2.0 Stiff; 2.0-4.0 Very Stiff; >4.0 Hard jt9-1-15-1

Page 3

Illinois Department of Transportation

Soil Survey Data

Project:
Route: US 20
Section: 29R-1
County Jo Daviess

Logged By: Wally Garza

Date: 7/30/15 Sta.: 111+72 (Elev. 706.7) Offset: 7' Lt

Depth	Sample No.	Soil Type	Water	Can No.	Qu	Description of Soil Layer (Color, Moisture, Strength, Etc.)
1						
2						1st Encounter – 704.7
3						
4						Auger Refusal @ 701.2
5						
6						
7						8" Asphalt
8						
9						
10						

Qu: 0-.25 Very Soft; .25-.5 Soft; .5-1.0 Medium; 1.0-2.0 Stiff; 2.0-4.0 Very Stiff; >4.0 Hard jt9-1-15-1

Jt9-1-15-1 Soil Survey Data US 20

Page 4

MODEL: Default
FILE NAME: E:\018\Struct\Wall IN4. Final Design\Design Plans\CADD_Sheets\0437011-D2640880-010-Borings 2.dgn

LIN ENGINEERING, LTD. Consulting Engineers Springfield, Illinois	USER NAME = LIN06-PC	DESIGNED - AML	REVISED -	STATE OF ILLINOIS DEPARTMENT OF TRANSPORTATION	BORING LOGS S.N. 043-7011
		CHECKED - VPT	REVISED -		
	PLOT TIME = 12:50:48 PM	DRAWN - AML	REVISED -		SHEET 10 OF 10 SHEETS
	PLOT DATE = 10/14/2021	CHECKED - VPT	REVISED -		

F.A.P. RTE.	SECTION	COUNTY	TOTAL SHEETS	SHEET NO.
301	29R-1	JO DAVIESS	679	350
		CONTRACT NO. 64880		
	ILLINOIS	FED. AID PROJECT		

10/14/2021 12:50:48 PM

Benchmark: Headwall at Sta. 1227+99.96, 35.85' Lt. of existing ℄ IL 84/U.S. Rte. 20, Elev. 682.42.

Existing Structure: None.

Northbound traffic will be maintained on IL 84/U.S. Rte. 20 using stage construction, while Southbound traffic will be detoured along Gear St. Summit St. will be closed to thru traffic during construction.

Notes:
The Limestone Block Wall at this location shall be constructed of Newly Acquired Stone in accordance with the Special Provision for Retaining Wall, Special.
Construction vibration monitoring shall be performed in accordance with the contract Special Provisions.
Logs for rock depth probes R-9 and R-10 are available within the S.N. 043-7011 plans.

LEGEND

- Pr. Manhole
- Pr. Inlet
- Pr. Storm Sewer
- Ex. Water Line
- Pr. Water Line
- Ex. Fire Hydrant
- Ex. Water Valve Box
- Pr. Water Valve Box
- Rock Depth Probe
- Pr. Handrail

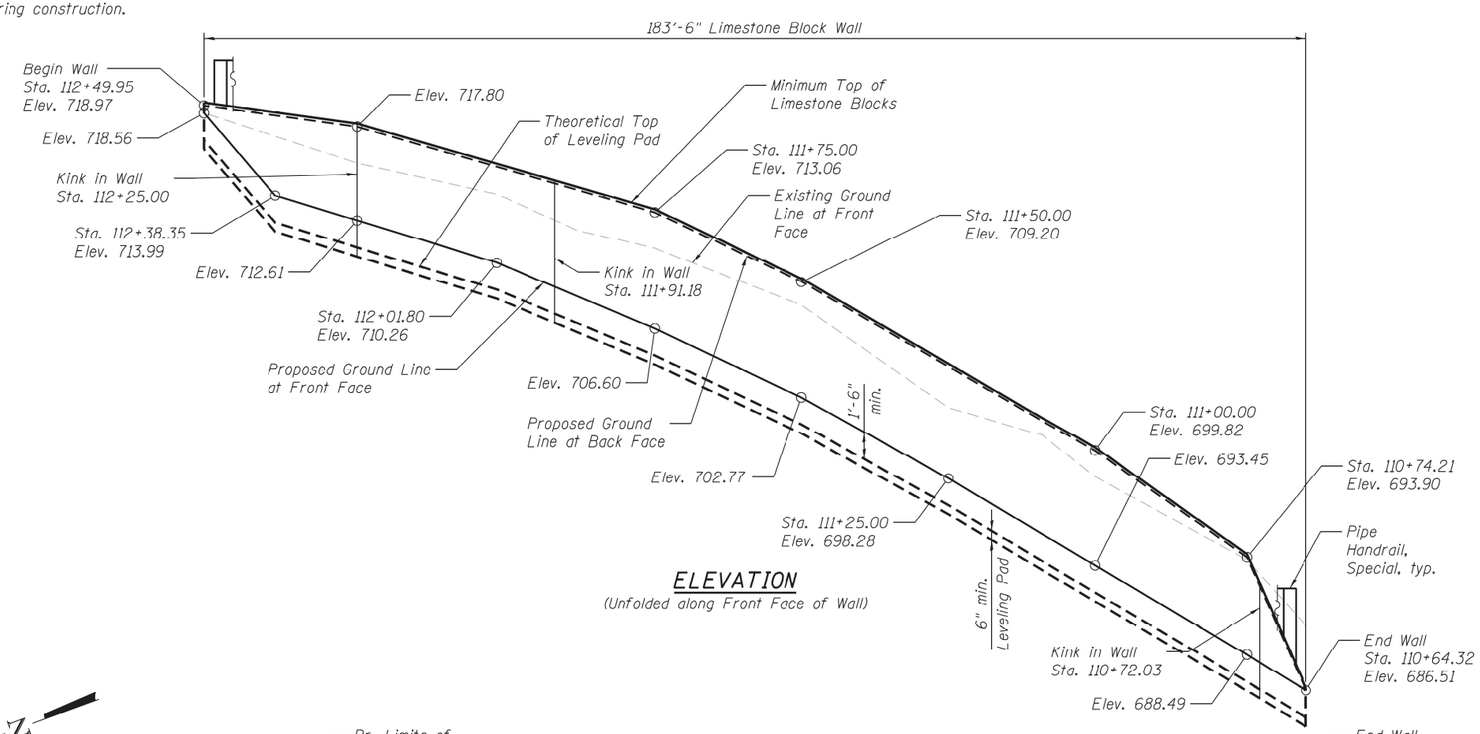

ELEVATION
(Unfolded along Front Face of Wall)

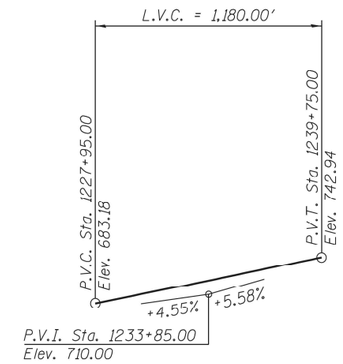

PROFILE GRADE
(Along Proposed ℄ IL 84/U.S. Rte. 20)

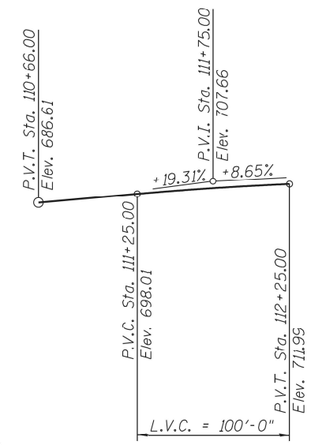

PROFILE GRADE
(Along Proposed ℄ Summit St.)

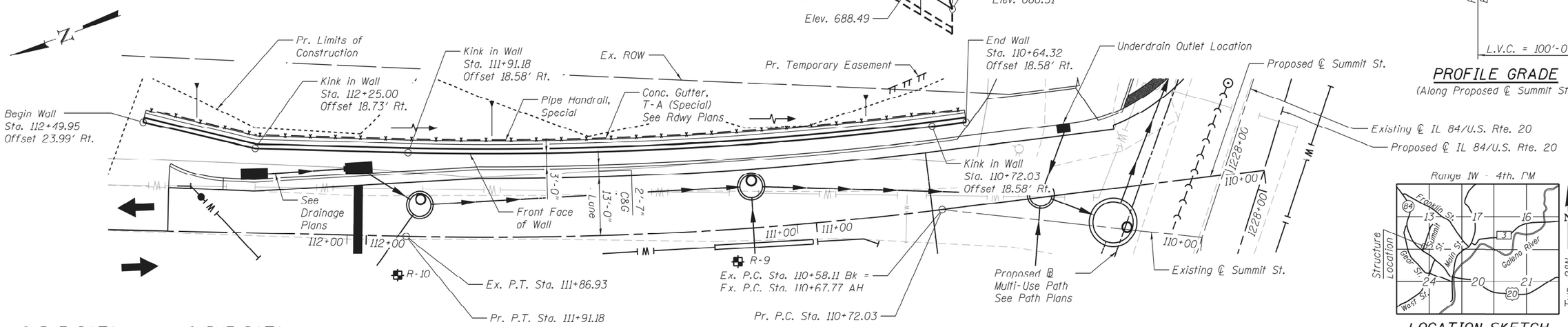

LOCATION SKETCH

CURVE DATA
(Summit Street)

Prop. Curve 70210
P.I. Sta. = 111+31.71
Δ = 8° 15' 25" (RT)
D = 6° 55' 47"
R = 826.82'
T = 59.58'
L = 119.16'
E = 2.15'
P.C. Sta. = 110+72.03
P.T. Sta. = 111+91.18

CURVE DATA
(IL 84/U.S. Rte. 20)

Prop. Curve 71270
P.I. Sta. = 1228+20.16
Δ = 15° 52' 55" (RT)
D = 4° 35' 01"
R = 1250.00'
T = 174.36'
L = 346.49'
E = 12.10'
P.C. Sta. = 1226+45.79
P.T. Sta. = 1229+92.28

PLAN
Stations and offsets are measured from Proposed ℄ IL 84/U.S. Rte. 20 to Proposed Ground Line at Front Face of Wall.

DESIGN SPECIFICATIONS
2017 AASHTO LRFD Bridge Design Specifications, 8th Edition

GENERAL PLAN & ELEVATION
IL 84/U.S. ROUTE 20
F.A.P. RTE. 301 - SEC. 29R-1
JO DAVIESS COUNTY
STATION 110+64.32 TO 112+49.95
WALL O

MODEL: Wall_O-D264880-001
FILE NAME: E:\1013Structl\Wall O\3. Final Plans\CADD_Sheets\Wal_O-D264880.dgn

LIN ENGINEERING, LTD.
Consulting Engineers
Springfield, Illinois

USER NAME = LIN06-PC	DESIGNED - AML	REVISED -	
	CHECKED - VPT	REVISED -	
PLOT TIME = 12:50:53 PM	DRAWN - AML	REVISED -	
PLOT DATE = 10/14/2021	CHECKED - VPT	REVISED -	

STATE OF ILLINOIS
DEPARTMENT OF TRANSPORTATION

GENERAL PLAN AND ELEVATION
WALL O
SHEET 1 OF 2 SHEETS

F.A.P. RTE.	SECTION	COUNTY	TOTAL SHEETS	SHEET NO.
301	29R-1	JO DAVIESS	679	351
		CONTRACT NO. 64880		
		ILLINOIS	FED. AID PROJECT	

10/14/2021 12:50:53 PM

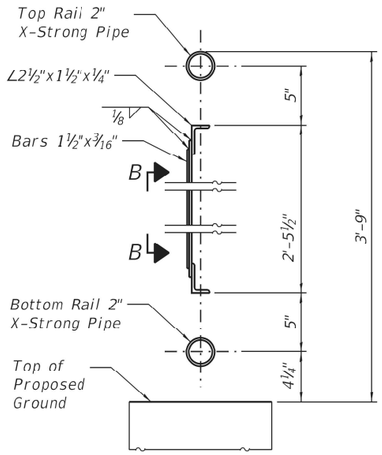

SECTION A-A

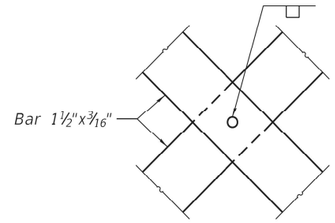

VIEW B-B

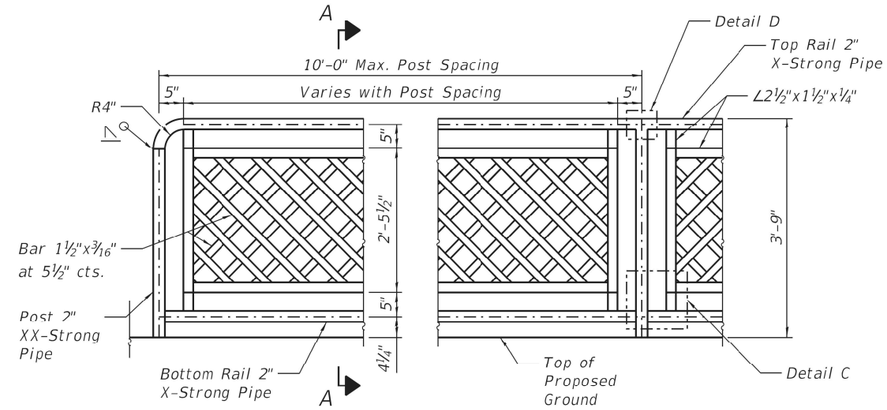

ELEVATION - PIPE HANDRAIL, SPECIAL

TOTAL BILL OF MATERIAL

Item	Unit	Total
Geocomposite Wall Drain	Sq.Yd.	128
Pipe Handrail, Special	Foot	181.0
Retaining Wall, Special	Sq.Ft.	1319
Pipe Underdrains for Structures 4"	Foot	187

PIPE HANDRAIL, SPECIAL LOCATION

Point	Station	Offset
Begin	112+48.89	26.83' Rt.
Kink	112+24.68	21.73' Rt.
Kink	111+91.18	21.58' Rt.
Kink	110+72.03	21.58' Rt.
End	110+65.32	21.58' Rt.

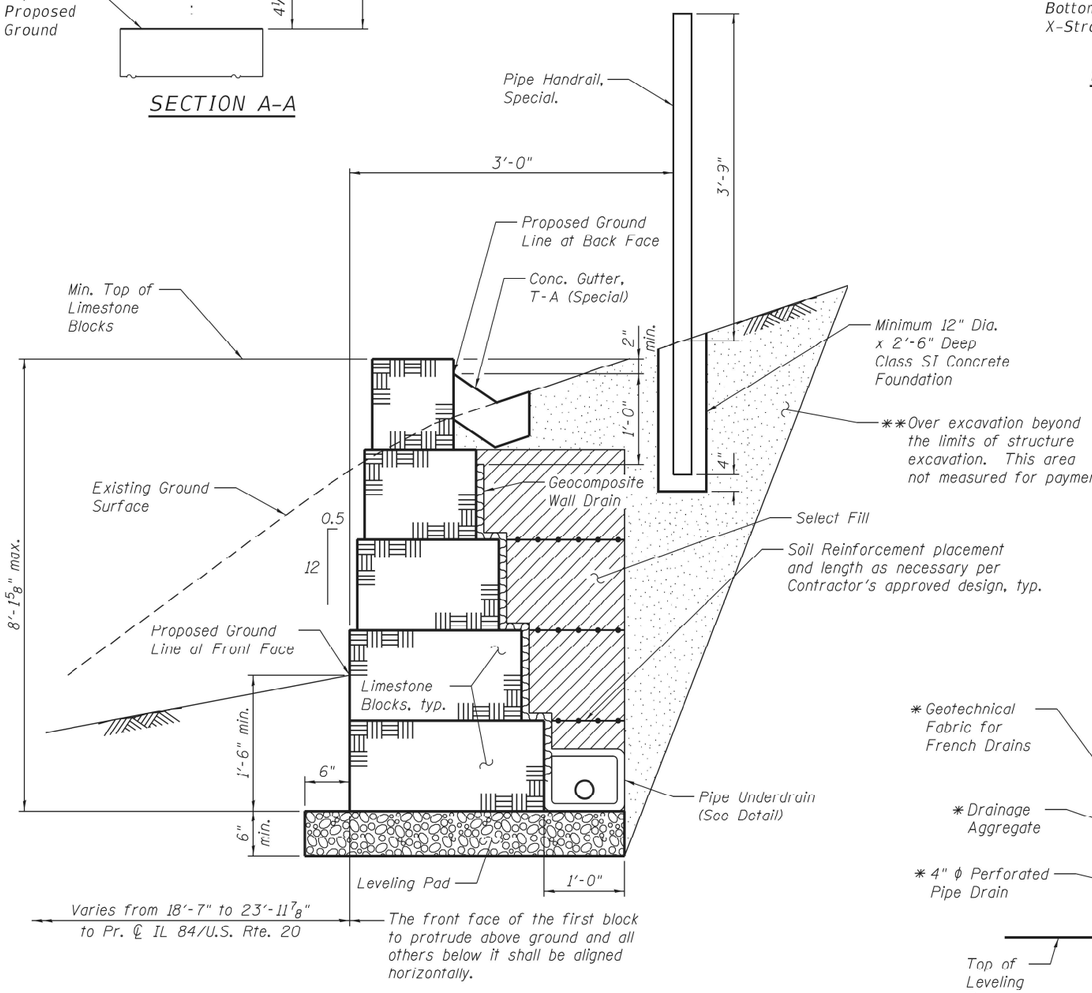

TYPICAL WALL SECTION

** Backfill remainder of structure excavation and over excavation with same material specified for select fill.

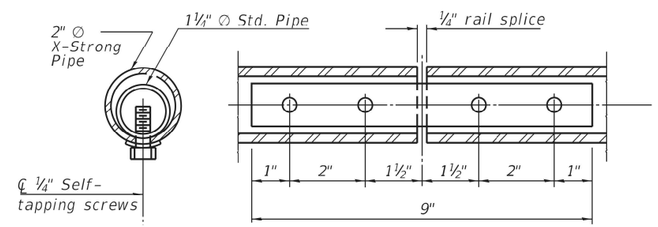

RAIL SPLICE

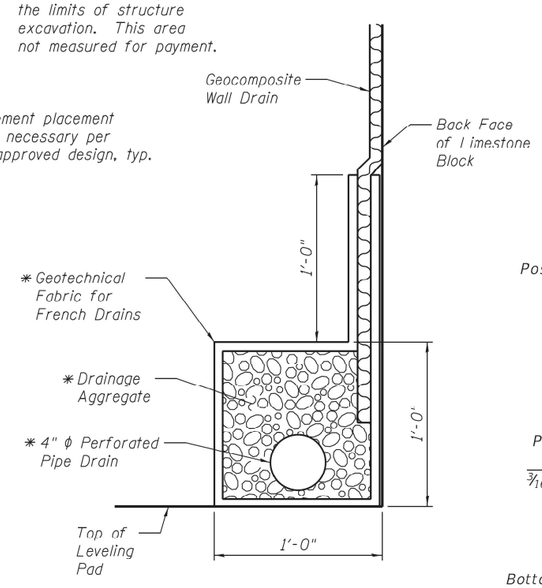

PIPE UNDERDRAIN DETAIL

* Included in the cost of Pipe Underdrains for Structures 4".

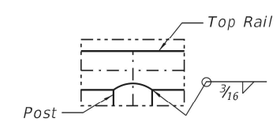

DETAIL D

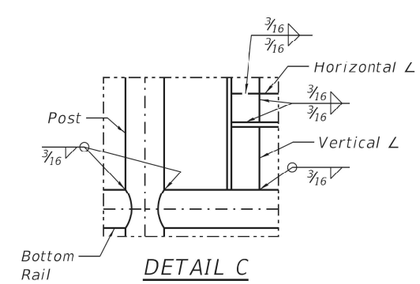

DETAIL C

Notes:

Gripping surfaces shall be uninterrupted by posts, other construction elements, or obstructions.

Ends of handrail shall be rounded.

Handrail shall not rotate within their fittings.

Handrail shall conform to Section 509 of the Standard Specifications, with the exception that all pipe and connections shall be welded, galvanized or aluminum, according to Article 1006.30 or 1006.34.

All posts, railing, splices, anchor devices, and plates shall be painted black using the Inorganic Zinc Rich Primer / Acrylic / Acrylic System for shop and field painting of new structural steel.

Fasteners shall be mechanically galvanized in painted areas.

Post spacing between the points shown in the table is at the discretion of the fabricator, in order to provide an aesthetically pleasing and cost effective design. Spacing of posts shall not exceed 10'-0".

Posts and vertical bars shall be fabricated to be plumb when installed on the retaining wall. Angle the horizontal rails as necessary to follow the vertical profile of the top of retaining wall.

Posts shall be placed in Class SI Conrete Foundation as shown in the Typical Wall Section. Concrete Foundation shall be included in the cost of Pipe Handrail, Special.

The Contractor shall be responsible for field verification of all horizontal and vertical geometry prior to fabrication of the handrail.

Handrail shall satisfy the loading requirements of Section 13.8.2 of the 2017 AASHTO LRFD Bridge Design Specifications, 8th Edition for Pedestrian Railing.

Member sizes shown are for estimating purposes only. The Contractor shall provide design calculations sealed by a Structural Engineer licensed in the State of Illinois with the actual member sizes used for fabrication.

Clear space between elements of the railing shall not allow the passage of a sphere greater than 4" in diameter.

This work shall consist of designing, furnishing, galvanizing, painting, and erecting handrails as listed above and according to these plans. This work shall be paid for at the contract unit price per FOOT for PIPE HANDRAIL, SPECIAL.

MODEL: Wall_O-D2640880-002
FILE NAME: E:\0193\Struct\Wall O\3. Final Plans\CADD_Sheets\Wal_O-D2640880.dgn

LIN ENGINEERING, LTD.
Consulting Engineers
Springfield, Illinois

USER NAME = LIN06-PC	DESIGNED - AML	REVISED -	
	CHECKED - VPT	REVISED -	
PLOT TIME = 12:50:54 PM	DRAWN - AML	REVISED -	
PLOT DATE = 10/14/2021	CHECKED - VPT	REVISED -	

STATE OF ILLINOIS
DEPARTMENT OF TRANSPORTATION

DETAILS
WALL O

SHEET 2 OF 2 SHEETS

F.A.P. RTE.	SECTION	COUNTY	TOTAL SHEETS	SHEET NO.
301	29R-1	JO DAVIESS	679	352
		CONTRACT NO. 64880		
	ILLINOIS	FED. AID PROJECT		

10/14/2021 12:50:54 PM

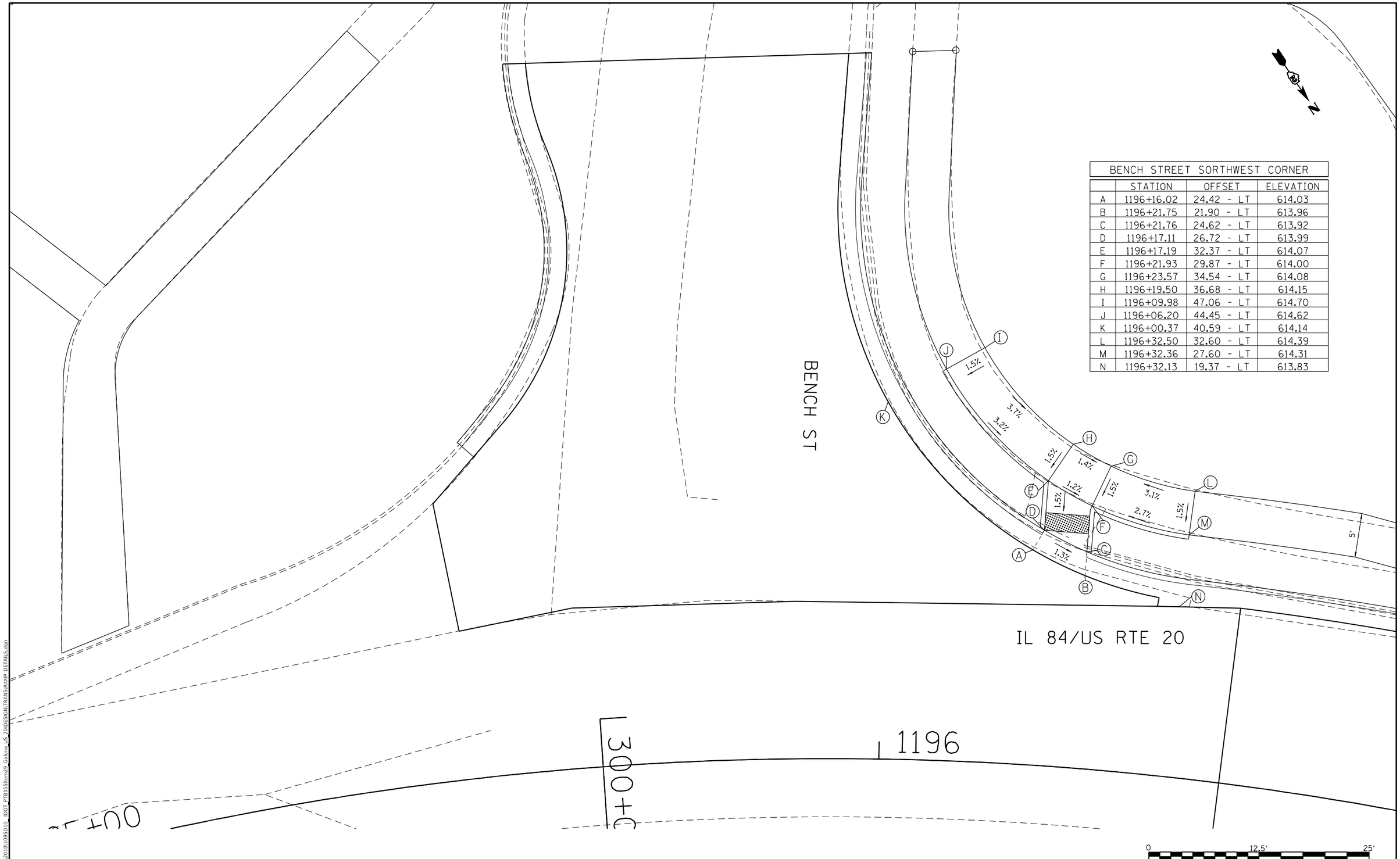

BENCH STREET SORTHWEST CORNER			
	STATION	OFFSET	ELEVATION
A	1196+16.02	24.42 - LT	614.03
B	1196+21.75	21.90 - LT	613.96
C	1196+21.76	24.62 - LT	613.92
D	1196+17.11	26.72 - LT	613.99
E	1196+17.19	32.37 - LT	614.07
F	1196+21.93	29.87 - LT	614.00
G	1196+23.57	34.54 - LT	614.08
H	1196+19.50	36.68 - LT	614.15
I	1196+09.98	47.06 - LT	614.70
J	1196+06.20	44.45 - LT	614.62
K	1196+00.37	40.59 - LT	614.14
L	1196+32.50	32.60 - LT	614.39
M	1196+32.36	27.60 - LT	614.31
N	1196+32.13	19.37 - LT	613.83

MODEL: Default
FILE NAME: S:\PROJECTS\2010\1095010_IDOT_PTB155\Item29_Galena_US_20\DESIGN\TRANS\RAMP DETAILS.dgn

WILLETT HOFMANN & ASSOCIATES INC
ENGINEERING ARCHITECTURE LAND SURVEYING
809 EAST 2ND STREET, DIXON, IL 61021-0367
T. 815-284-3301 DESIGN FIRM: #184-000916

USER NAME = mslick	DESIGNED - AMF	REVISED -	
	DRAWN - TJA	REVISED -	
PLOT SCALE = 120.0000 ' / ft.	CHECKED - GFS	REVISED -	
PLOT DATE = 10/15/2021	DATE - 5/22/20	REVISED -	

STATE OF ILLINOIS
DEPARTMENT OF TRANSPORTATION

IL RTE 84/US 20
SIDEWALK RAMP DETAILS

SCALE: 1"=5' | SHEET NO. 1 OF 4 SHEETS

F.A.P. RTE.	SECTION	COUNTY	TOTAL SHEETS	SHEET NO.
301	29R-1	JO DAVIESS	679	353
		CONTRACT NO. 64880		
		ILLINOIS	FED. AID PROJECT	

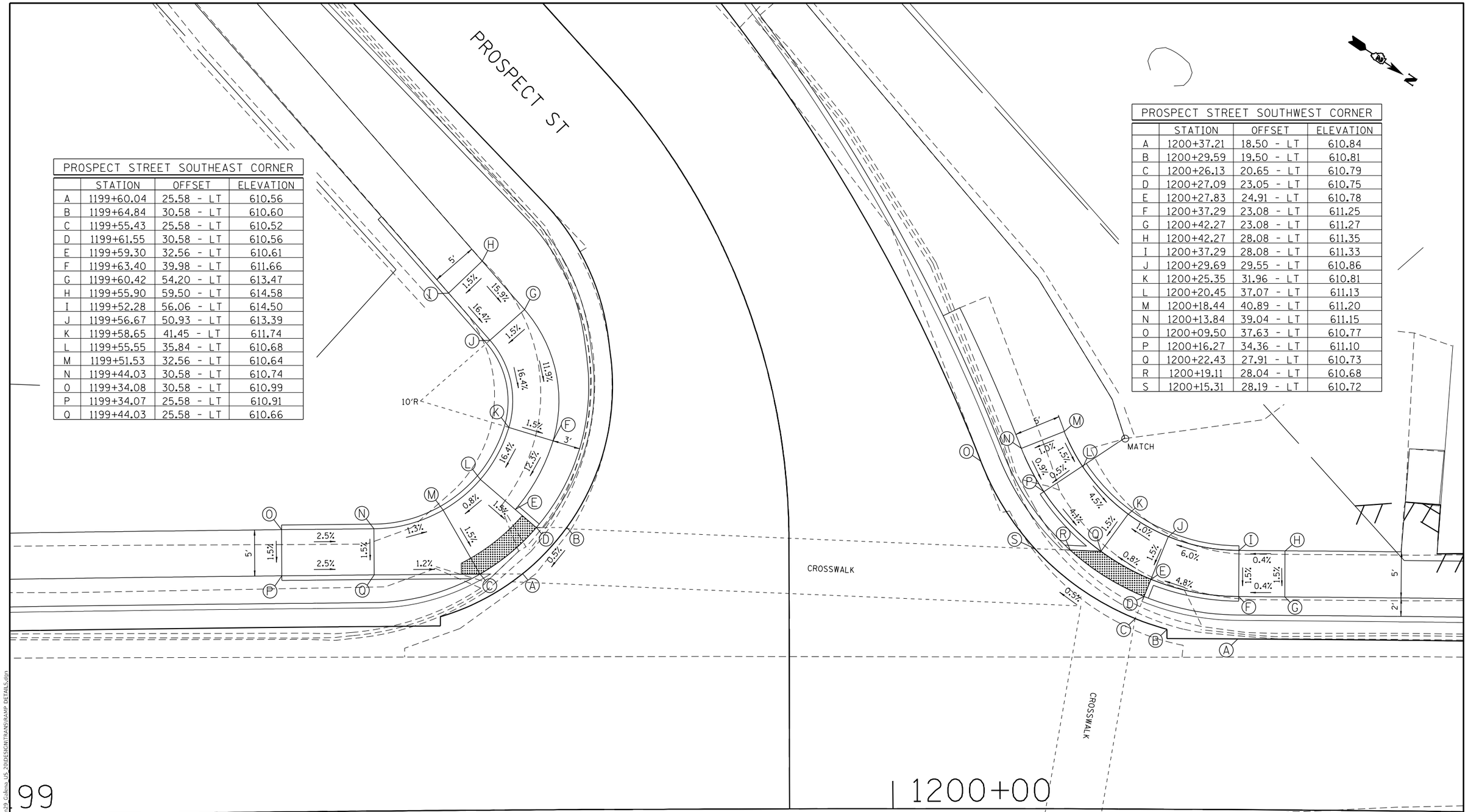

PROSPECT STREET SOUTHEAST CORNER			
	STATION	OFFSET	ELEVATION
A	1199+60.04	25.58 - LT	610.56
B	1199+64.84	30.58 - LT	610.60
C	1199+55.43	25.58 - LT	610.52
D	1199+61.55	30.58 - LT	610.56
E	1199+59.30	32.56 - LT	610.61
F	1199+63.40	39.98 - LT	611.66
G	1199+60.42	54.20 - LT	613.47
H	1199+55.90	59.50 - LT	614.58
I	1199+52.28	56.06 - LT	614.50
J	1199+56.67	50.93 - LT	613.39
K	1199+58.65	41.45 - LT	611.74
L	1199+55.55	35.84 - LT	610.68
M	1199+51.53	32.56 - LT	610.64
N	1199+44.03	30.58 - LT	610.74
O	1199+34.08	30.58 - LT	610.99
P	1199+34.07	25.58 - LT	610.91
Q	1199+44.03	25.58 - LT	610.66

PROSPECT STREET SOUTHWEST CORNER			
	STATION	OFFSET	ELEVATION
A	1200+37.21	18.50 - LT	610.84
B	1200+29.59	19.50 - LT	610.81
C	1200+26.13	20.65 - LT	610.79
D	1200+27.09	23.05 - LT	610.75
E	1200+27.83	24.91 - LT	610.78
F	1200+37.29	23.08 - LT	611.25
G	1200+42.27	23.08 - LT	611.27
H	1200+42.27	28.08 - LT	611.35
I	1200+37.29	28.08 - LT	611.33
J	1200+29.69	29.55 - LT	610.86
K	1200+25.35	31.96 - LT	610.81
L	1200+20.45	37.07 - LT	611.13
M	1200+18.44	40.89 - LT	611.20
N	1200+13.84	39.04 - LT	611.15
O	1200+09.50	37.63 - LT	610.77
P	1200+16.27	34.36 - LT	611.10
Q	1200+22.43	27.91 - LT	610.73
R	1200+19.11	28.04 - LT	610.68
S	1200+15.31	28.19 - LT	610.72

MODEL: Default
FILE NAME: S:\PROJECTS\2010\1095D10_IDOT_PTB155Item29_Galena_US_20\DESIGN\TRANS\RAMP DETAILS.dgn

WILLETT HOFMANN & ASSOCIATES INC
ENGINEERING ARCHITECTURE LAND SURVEYING
809 EAST 2ND STREET, DIXON, IL 61021-0362
P: (815) 284-3300 DESIGN FIRM: #184-000910

USER NAME = mslick	DESIGNED - AMF	REVISED -	
	DRAWN - TJA	REVISED -	
PLOT SCALE = 120.0000 ' / in.	CHECKED - GFS	REVISED -	
PLOT DATE = 10/15/2021	DATE - 5/22/20	REVISED -	

STATE OF ILLINOIS
DEPARTMENT OF TRANSPORTATION

IL RTE 84/US 20
SIDEWALK RAMP DETAILS

SCALE: 1"=5' | SHEET NO. 2 OF 4 SHEETS

F.A.P. RTE.	SECTION	COUNTY	TOTAL SHEETS	SHEET NO.
301	29R-1	JO DAVIESS	679	354
		CONTRACT NO. 64880		
		ILLINOIS	FED. AID PROJECT	

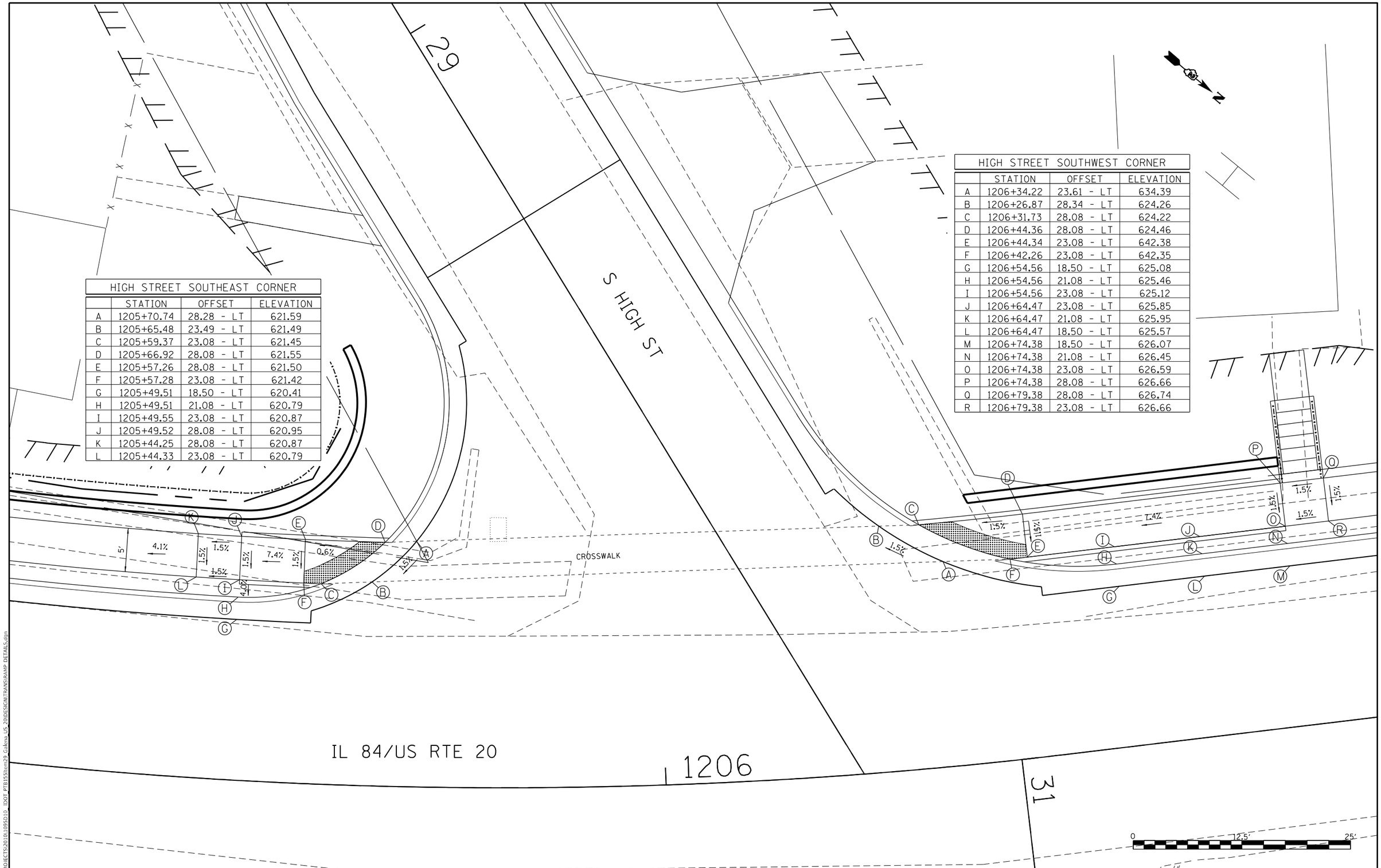

HIGH STREET SOUTHEAST CORNER			
	STATION	OFFSET	ELEVATION
A	1205+70.74	28.28 - LT	621.59
B	1205+65.48	23.49 - LT	621.49
C	1205+59.37	23.08 - LT	621.45
D	1205+66.92	28.08 - LT	621.55
E	1205+57.26	28.08 - LT	621.50
F	1205+57.28	23.08 - LT	621.42
G	1205+49.51	18.50 - LT	620.41
H	1205+49.51	21.08 - LT	620.79
I	1205+49.55	23.08 - LT	620.87
J	1205+49.52	28.08 - LT	620.95
K	1205+44.25	28.08 - LT	620.87
L	1205+44.33	23.08 - LT	620.79

HIGH STREET SOUTHWEST CORNER			
	STATION	OFFSET	ELEVATION
A	1206+34.22	23.61 - LT	634.39
B	1206+26.87	28.34 - LT	624.26
C	1206+31.73	28.08 - LT	624.22
D	1206+44.36	28.08 - LT	624.46
E	1206+44.34	23.08 - LT	642.38
F	1206+42.26	23.08 - LT	642.35
G	1206+54.56	18.50 - LT	625.08
H	1206+54.56	21.08 - LT	625.46
I	1206+54.56	23.08 - LT	625.12
J	1206+64.47	23.08 - LT	625.85
K	1206+64.47	21.08 - LT	625.95
L	1206+64.47	18.50 - LT	625.57
M	1206+74.38	18.50 - LT	626.07
N	1206+74.38	21.08 - LT	626.45
O	1206+74.38	23.08 - LT	626.59
P	1206+74.38	28.08 - LT	626.66
Q	1206+79.38	28.08 - LT	626.74
R	1206+79.38	23.08 - LT	626.66

MODEL: Default
FILE NAME: S:\PROJECTS\2010\1095D10_ IDOT_PTB155Item29 Galena_US 20\DESIGN\TRANS\RAMP DETAILS.dgn

WILLETT HOFMANN & ASSOCIATES INC
ENGINEERING ARCHITECTURE LAND SURVEYING
899 EAST 2ND STREET, DIXON, IL 61021-0367
P 815-284-3300 DESIGN FIRM: 184-000710

USER NAME = mslick	DESIGNED - AMF	REVISED -	
	DRAWN - TJA	REVISED -	
PLOT SCALE = 120.0000 ' / ft.	CHECKED - GFS	REVISED -	
PLOT DATE = 10/15/2021	DATE - 5/22/20	REVISED -	

STATE OF ILLINOIS
DEPARTMENT OF TRANSPORTATION

IL RTE 84/US 20
SIDEWALK RAMP DETAILS

SCALE: 1"=5' | SHEET NO. 3 OF 4 SHEETS

F.A.P. RTE.	SECTION	COUNTY	TOTAL SHEETS	SHEET NO.
301	29R-1	JO DAVIESS	679	355
		CONTRACT NO. 64880		
		ILLINOIS	FED. AID PROJECT	

LEGEND

*Ⓧ MATCHING EXISTING ELEVATION

S. WEST ST. SOUTHEAST CORNER			
	STATION	OFFSET	ELEVATION
A	1215+54.97	28.65 - LT	649.19
B	1215+58.79	34.16 - LT	649.29
C	1215+55.59	33.76 - LT	649.25
D	1215+47.64	32.78 - LT	649.19
E	1215+48.24	27.82 - LT	649.11
F	1215+29.94	25.62 - LT	647.77
G	1215+29.36	30.59 - LT	647.85
H	1215+24.42	30.00 - LT	647.77
I	1215+25.00	25.04 - LT	647.69
J	1215+05.93	27.86 - LT	646.45
K	1215+10.17	23.31 - LT	646.59
L	1215+09.61	23.31 - LT	646.64
M	1215+50.88	23.31 - LT	649.15

S. WEST ST. SOUTHWEST CORNER			
	STATION	OFFSET	ELEVATION
A	1215+98.63	34.19 - LT	651.07
B	1215+95.61	38.84 - LT	651.03
C	1215+98.36	39.20 - LT	650.99
D	1216+02.92	39.80 - LT	651.06
E	1216+05.88	40.19 - LT	651.10
F	1216+01.60	34.58 - LT	651.03
G	1216+06.53	35.23 - LT	651.10
H	1216+37.79	39.46 - LT	654.17
I	1216+37.78	44.51 - LT	654.25
J	1216+37.77	47.24 - LT	654.29
K	1216+50.72	41.32 - LT	655.58
L	1216+50.72	45.33 - LT	655.64
M	1216+50.72	48.67 - LT	655.69
N	1216+02.85	42.08 - LT	651.09
O	1216+05.82	42.19 - LT	651.13
P	1216+02.33	58.62 - LT	652.86
Q	1216+05.30	58.72 - LT	652.86
R	1216+03.04	63.45 - LT	653.39
Q	1216+05.14	63.71 - LT	653.38

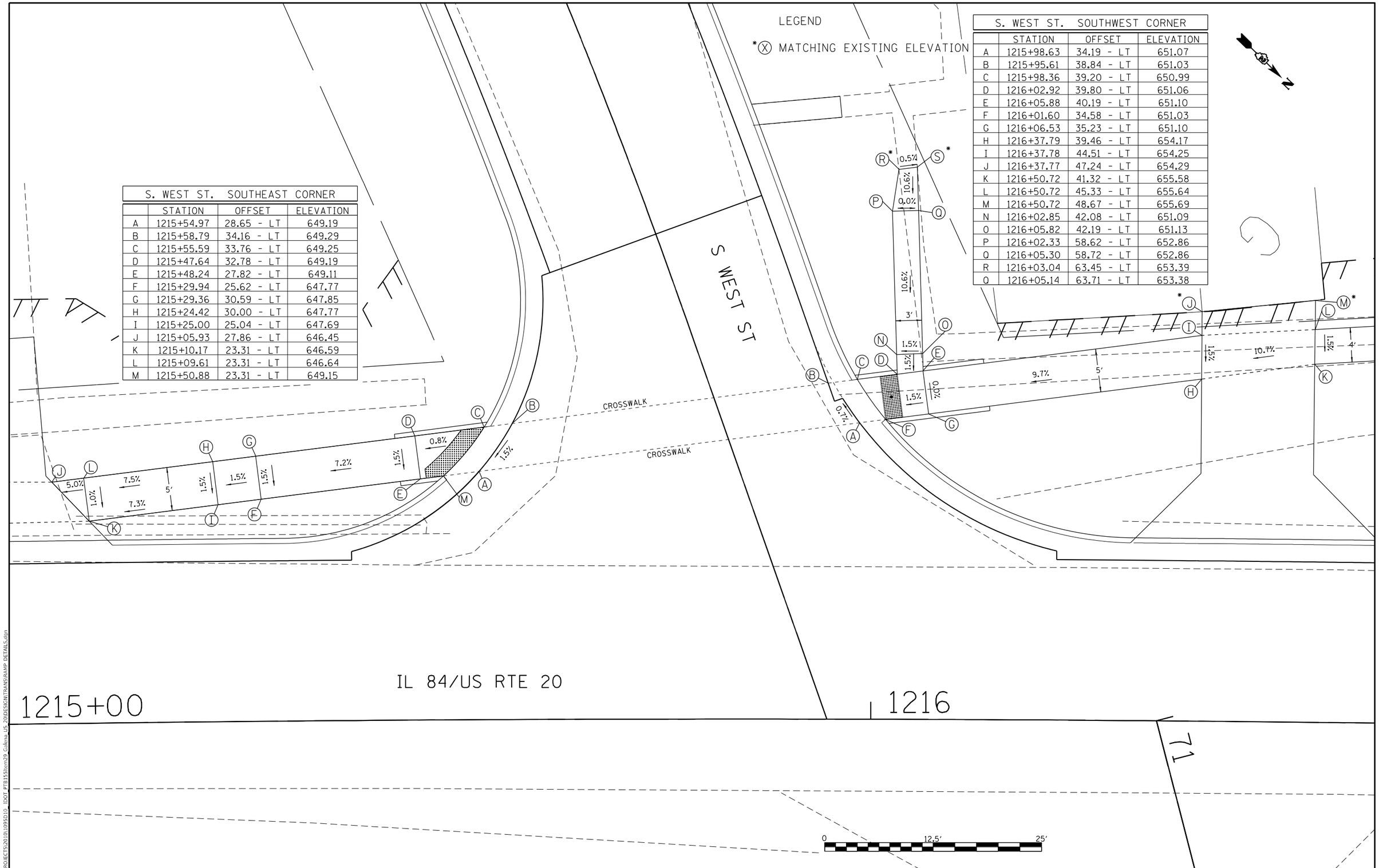

MODEL: Default
FILE NAME: S:\PROJECTS\2010\095510_IDOT_PTB155Item29_Galena_US_20\DESIGN\TRANS\RAMP DETAILS.dgn

WILLETT HOFMANN & ASSOCIATES INC
ENGINEERING ARCHITECTURE LAND SURVEYING
809 EAST 2ND STREET, DIXON, IL 61021-0367
T. 815-284-3301 DESIGN FIRM: #184-000916

USER NAME = mslick	DESIGNED - AMF	REVISED -	
	DRAWN - TJA	REVISED -	
PLOT SCALE = 120.0000 ' / in.	CHECKED - GFS	REVISED -	
PLOT DATE = 10/15/2021	DATE - 5/22/20	REVISED -	

STATE OF ILLINOIS
DEPARTMENT OF TRANSPORTATION

IL RTE 84/US 20
SIDEWALK RAMP DETAILS

SCALE: 1"=5' | SHEET NO. 4 OF 4 SHEETS

F.A.P. RTE.	SECTION	COUNTY	TOTAL SHEETS	SHEET NO.
301	29R-1	JO DAVIESS	679	356
		CONTRACT NO. 64880		
		ILLINOIS	FED. AID PROJECT	

BENCH STREET NORTHWEST CORNER			
	STATION	OFFSET	ELEVATION
A	1196+15.97	38.23 - RT	612.16
B	1196+13.87	36.19 - RT	612.20
C	1196+21.60	31.18 - RT	612.23
D	1196+21.59	34.25 - RT	612.19
E	1196+21.92	40.24 - RT	612.11
F	1196+35.15	34.02 - RT	612.43
G	1196+37.98	43.70 - RT	612.28
H	1196+29.25	47.91 - RT	611.95
I	1196+25.05	51.79 - RT	611.90
J	1196+23.84	74.28 - RT	610.77
K	1196+27.32	76.09 - RT	610.72
L	1196+35.78	76.38 - RT	610.49
M	1196+48.35	74.89 - RT	610.16
N	1196+73.80	75.95 - RT	610.56
O	1196+74.97	80.80 - RT	610.64
P	1196+50.53	84.75 - RT	610.31
Q	1196+37.51	86.29 - RT	610.46
R	1196+22.29	85.30 - RT	610.57
S	1196+22.89	90.79 - RT	610.49
T	1196+23.38	93.57 - RT	610.53
U	1196+13.92	90.53 - RT	610.64
V	1196+15.76	88.35 - RT	610.60
W	1196+14.77	81.35 - RT	610.67
X	1196+15.80	45.76 - RT	612.05

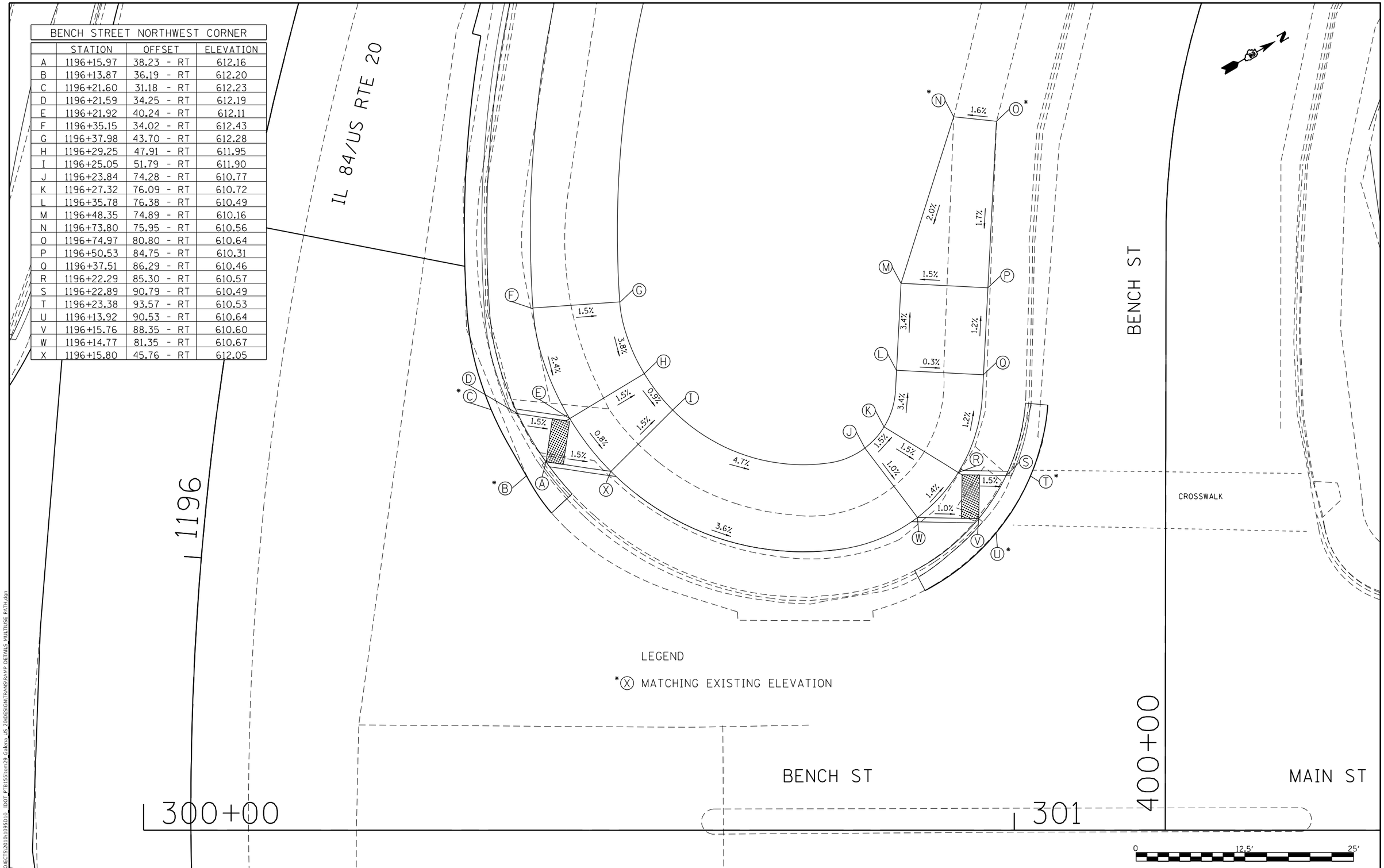

LEGEND

*(X) MATCHING EXISTING ELEVATION

MODEL: Default
FILE NAME: S:\PROJECTS\2010\109SD10_IDOT PTB155Item29 Galena US 20\DESIGN\TRANS\RAMP DETAILS MULTIUSE PATH.dgn

WILLETT HOFMANN & ASSOCIATES INC
ENGINEERING ARCHITECTURE LAND SURVEYING
109 EAST 2ND STREET, DIXON, IL 61021-0367
T: 815-284-3301 DESIGN FIRM: 184-000715

USER NAME = mslick	DESIGNED - AMF	REVISED -
	DRAWN - TJA	REVISED -
PLOT SCALE = 120.0000 ' / ft.	CHECKED - GFS	REVISED -
PLOT DATE = 10/15/2021	DATE - 5/22/20	REVISED -

STATE OF ILLINOIS
DEPARTMENT OF TRANSPORTATION

IL RTE 84/US 20
MULTI-USE PATH RAMP DETAILS

SCALE: 1"=5' | SHEET NO. 1 OF 12 SHEETS

F.A.P. RTE.	SECTION	COUNTY	TOTAL SHEETS	SHEET NO.
301	29R-1	JO DAVIESS	679	357
		CONTRACT NO. 64880		
		ILLINOIS	FED. AID PROJECT	

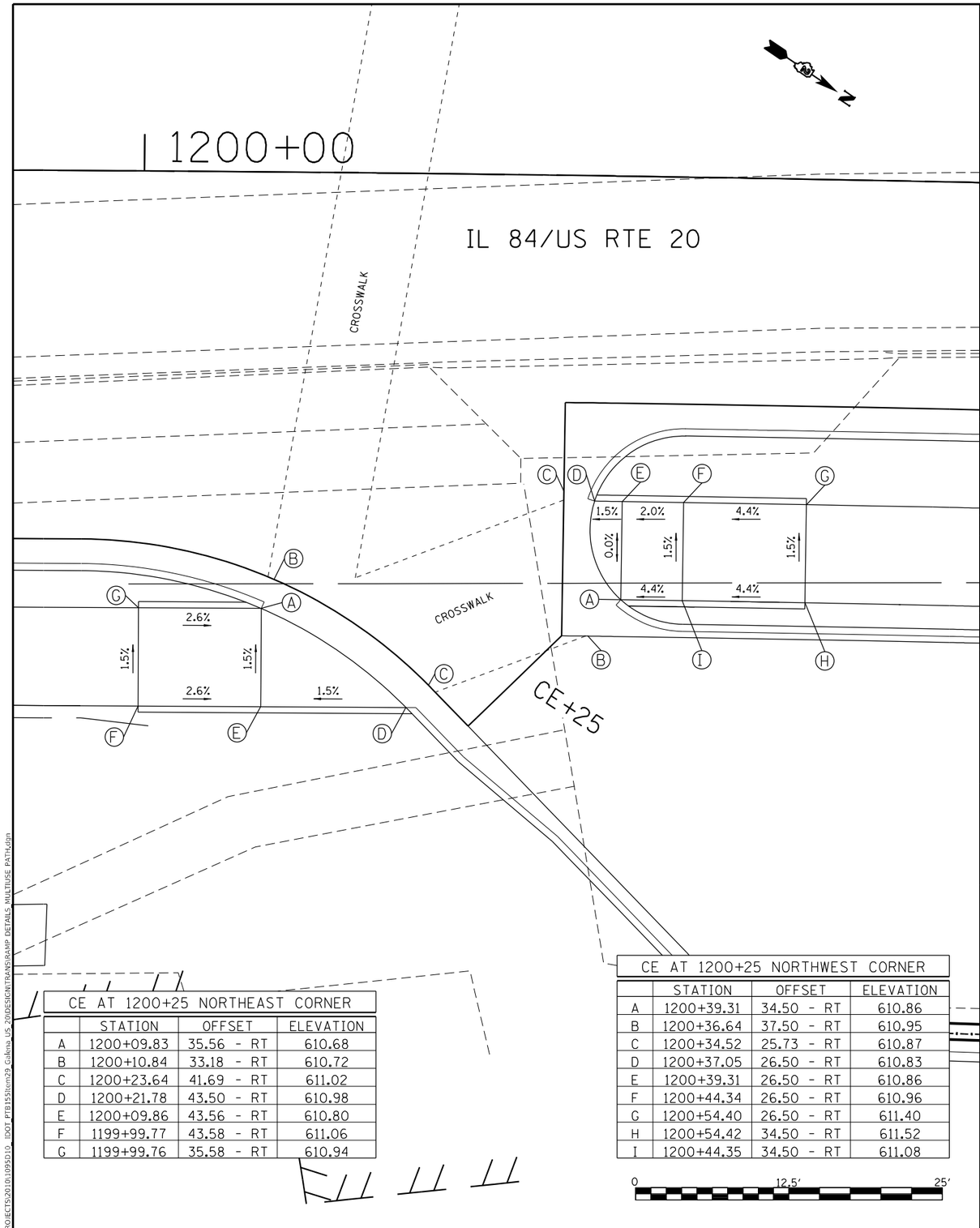

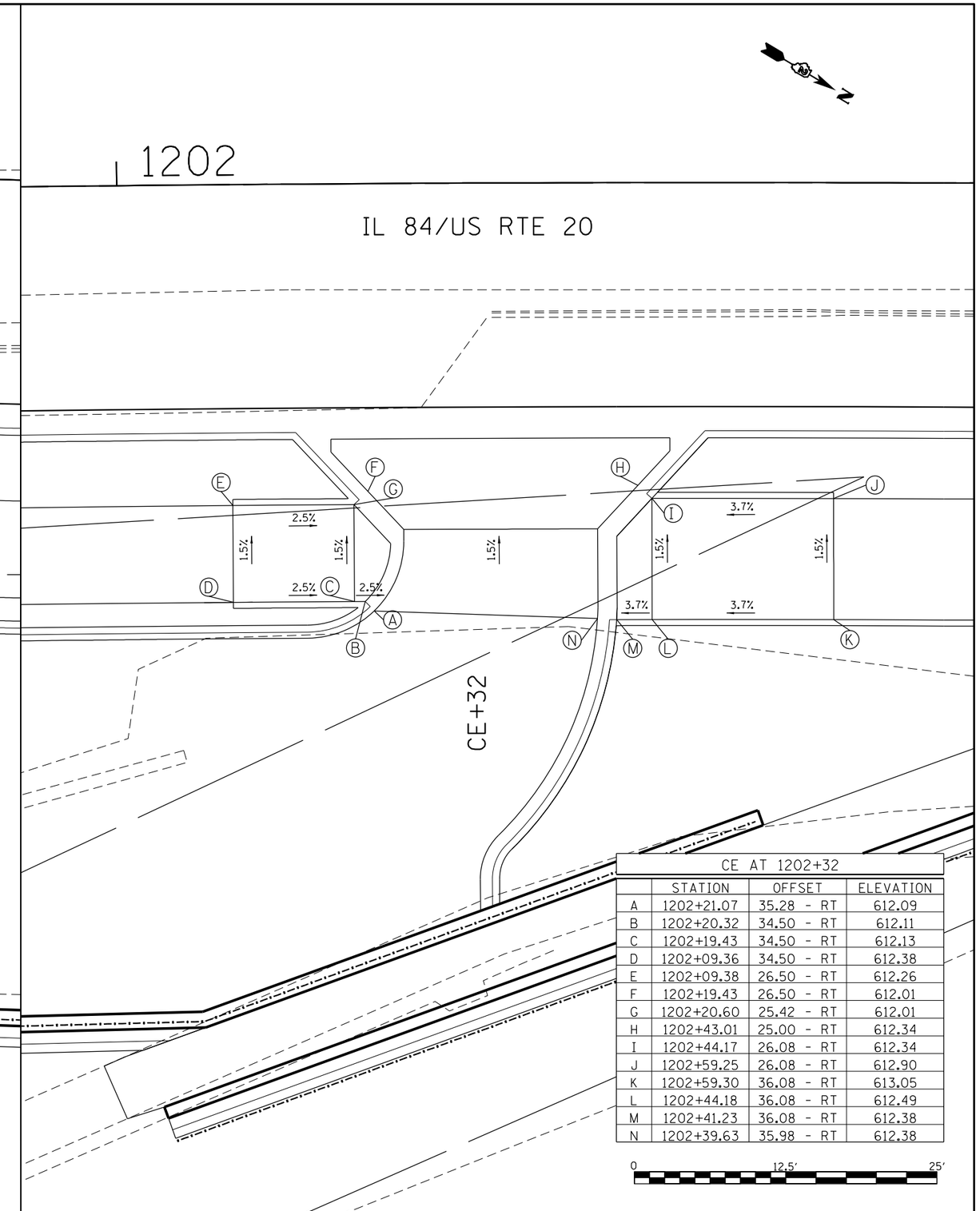

CE AT 1200+25 NORTHEAST CORNER

	STATION	OFFSET	ELEVATION
A	1200+09.83	35.56 - RT	610.68
B	1200+10.84	33.18 - RT	610.72
C	1200+23.64	41.69 - RT	611.02
D	1200+21.78	43.50 - RT	610.98
E	1200+09.86	43.56 - RT	610.80
F	1199+99.77	43.58 - RT	611.06
G	1199+99.76	35.58 - RT	610.94

CE AT 1200+25 NORTHWEST CORNER

	STATION	OFFSET	ELEVATION
A	1200+39.31	34.50 - RT	610.86
B	1200+36.64	37.50 - RT	610.95
C	1200+34.52	25.73 - RT	610.87
D	1200+37.05	26.50 - RT	610.83
E	1200+39.31	26.50 - RT	610.86
F	1200+44.34	26.50 - RT	610.96
G	1200+54.40	26.50 - RT	611.40
H	1200+54.42	34.50 - RT	611.52
I	1200+44.35	34.50 - RT	611.08

0 12.5′ 25′

CE AT 1202+32

	STATION	OFFSET	ELEVATION
A	1202+21.07	35.28 - RT	612.09
B	1202+20.32	34.50 - RT	612.11
C	1202+19.43	34.50 - RT	612.13
D	1202+09.36	34.50 - RT	612.38
E	1202+09.38	26.50 - RT	612.26
F	1202+19.43	26.50 - RT	612.01
G	1202+20.60	25.42 - RT	612.01
H	1202+43.01	25.00 - RT	612.34
I	1202+44.17	26.08 - RT	612.34
J	1202+59.25	26.08 - RT	612.90
K	1202+59.30	36.08 - RT	613.05
L	1202+44.18	36.08 - RT	612.49
M	1202+41.23	36.08 - RT	612.38
N	1202+39.63	35.98 - RT	612.38

0 12.5′ 25′

MODEL: Default
FILE NAME: S:\PROJECTS\2010\0995\10_IDOT_PTB155\Item29 Galena_US 20\DESIGN\TRANS\RAMP DETAILS_MULTIUSE PATH.dgn

WILLETT HOFMANN & ASSOCIATES INC
ENGINEERING ARCHITECTURE LAND SURVEYING
809 EAST 2ND STREET, DIXON, IL 61021-0367
T 815-284-3301 DESIGN FIRM #184-000910

USER NAME = mslick	DESIGNED - AMF	REVISED -	
	DRAWN - TJA	REVISED -	
PLOT SCALE = 120.0000 ' / in.	CHECKED - GFS	REVISED -	
PLOT DATE = 10/15/2021	DATE - 5/22/20	REVISED -	

STATE OF ILLINOIS
DEPARTMENT OF TRANSPORTATION

IL RTE 84/US 20
MULTI-USE PATH RAMP DETAILS

SCALE: 1"=5′ | SHEET NO. 2 OF 12 SHEETS

F.A.P. RTE.	SECTION	COUNTY	TOTAL SHEETS	SHEET NO.
301	29R-1	JO DAVIESS	679	358
		CONTRACT NO. 64880		
		ILLINOIS	FED. AID PROJECT	

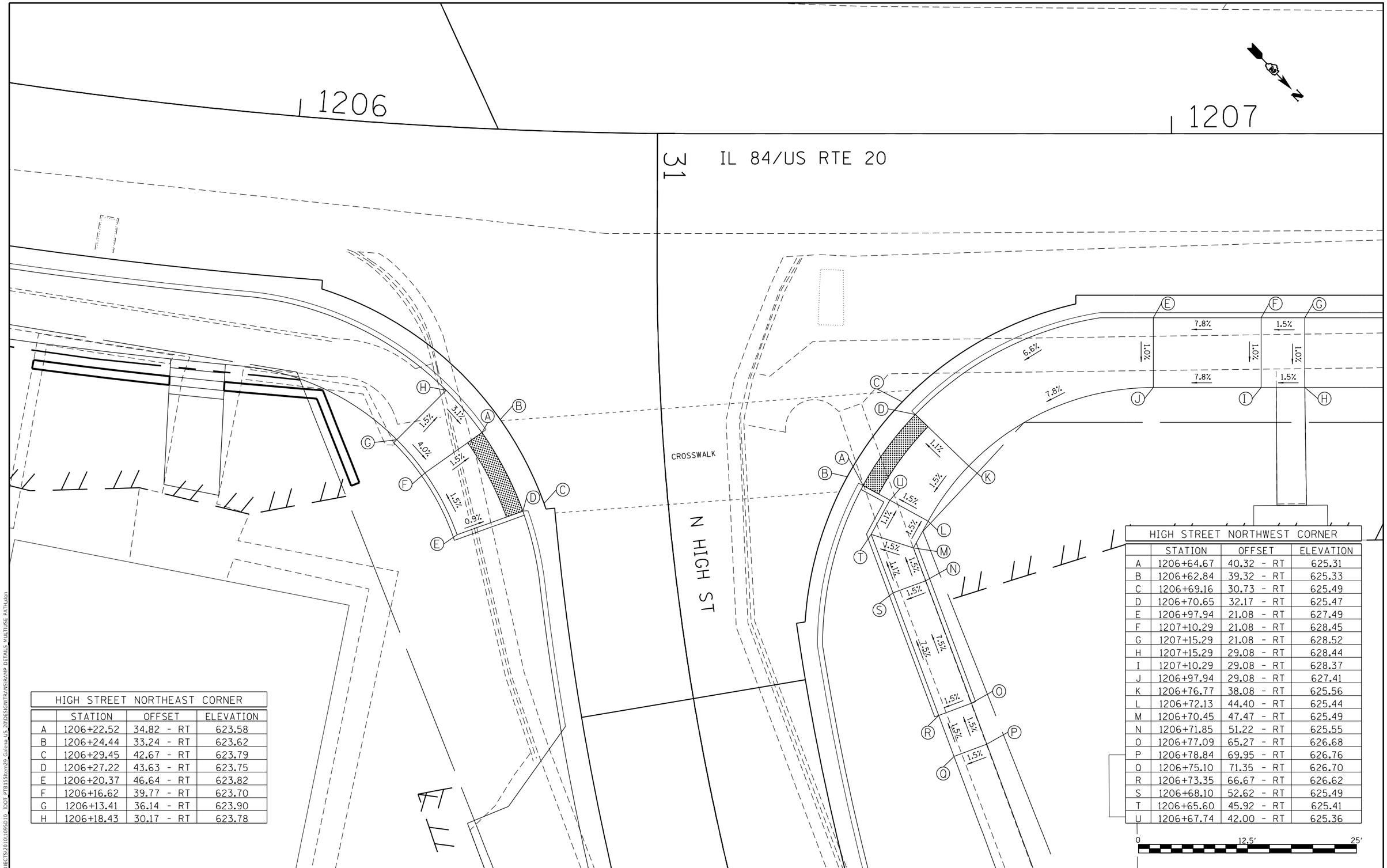

HIGH STREET NORTHEAST CORNER			
	STATION	OFFSET	ELEVATION
A	1206+22.52	34.82 - RT	623.58
B	1206+24.44	33.24 - RT	623.62
C	1206+29.45	42.67 - RT	623.79
D	1206+27.22	43.63 - RT	623.75
E	1206+20.37	46.64 - RT	623.82
F	1206+16.62	39.77 - RT	623.70
G	1206+13.41	36.14 - RT	623.90
H	1206+18.43	30.17 - RT	623.78

HIGH STREET NORTHWEST CORNER			
	STATION	OFFSET	ELEVATION
A	1206+64.67	40.32 - RT	625.31
B	1206+62.84	39.32 - RT	625.33
C	1206+69.16	30.73 - RT	625.49
D	1206+70.65	32.17 - RT	625.47
E	1206+97.94	21.08 - RT	627.49
F	1207+10.29	21.08 - RT	628.45
G	1207+15.29	21.08 - RT	628.52
H	1207+15.29	29.08 - RT	628.44
I	1207+10.29	29.08 - RT	628.37
J	1206+97.94	29.08 - RT	627.41
K	1206+76.77	38.08 - RT	625.56
L	1206+72.13	44.40 - RT	625.44
M	1206+70.45	47.47 - RT	625.49
N	1206+71.85	51.22 - RT	625.55
O	1206+77.09	65.27 - RT	626.68
P	1206+78.84	69.95 - RT	626.76
Q	1206+75.10	71.35 - RT	626.70
R	1206+73.35	66.67 - RT	626.62
S	1206+68.10	52.62 - RT	625.49
T	1206+65.60	45.92 - RT	625.41
U	1206+67.74	42.00 - RT	625.36

0 12.5' 25'

MODEL: Default
FILE NAME: S:\PROJECTS\2010\095910_IDOT_PTB155\Item29_Galena_US_20\DESIGN\TRANS\RAMP DETAILS_MULTIUSE PATH.dgn

WILLETT HOFMANN & ASSOCIATES INC
ENGINEERING ARCHITECTURE LAND SURVEYING
809 EAST 2ND STREET, DIXON, IL 61021-0367
T. 815-284-3300 DESIGN FIRM: #184-000916

USER NAME = mslick	DESIGNED - AMF	REVISED -	
	DRAWN - TJA	REVISED -	
PLOT SCALE = 120.0000 ' / in.	CHECKED - GFS	REVISED -	
PLOT DATE = 10/15/2021	DATE - 5/22/20	REVISED -	

STATE OF ILLINOIS
DEPARTMENT OF TRANSPORTATION

IL RTE 84/US 20
MULTI-USE PATH RAMP DETAILS

SCALE: 1"=5' | SHEET NO. 3 OF 12 SHEETS

F.A.P. RTE.	SECTION	COUNTY	TOTAL SHEETS	SHEET NO.
301	29R-1	JO DAVIESS	679	359
		CONTRACT NO. 64880		
		ILLINOIS	FED. AID PROJECT	

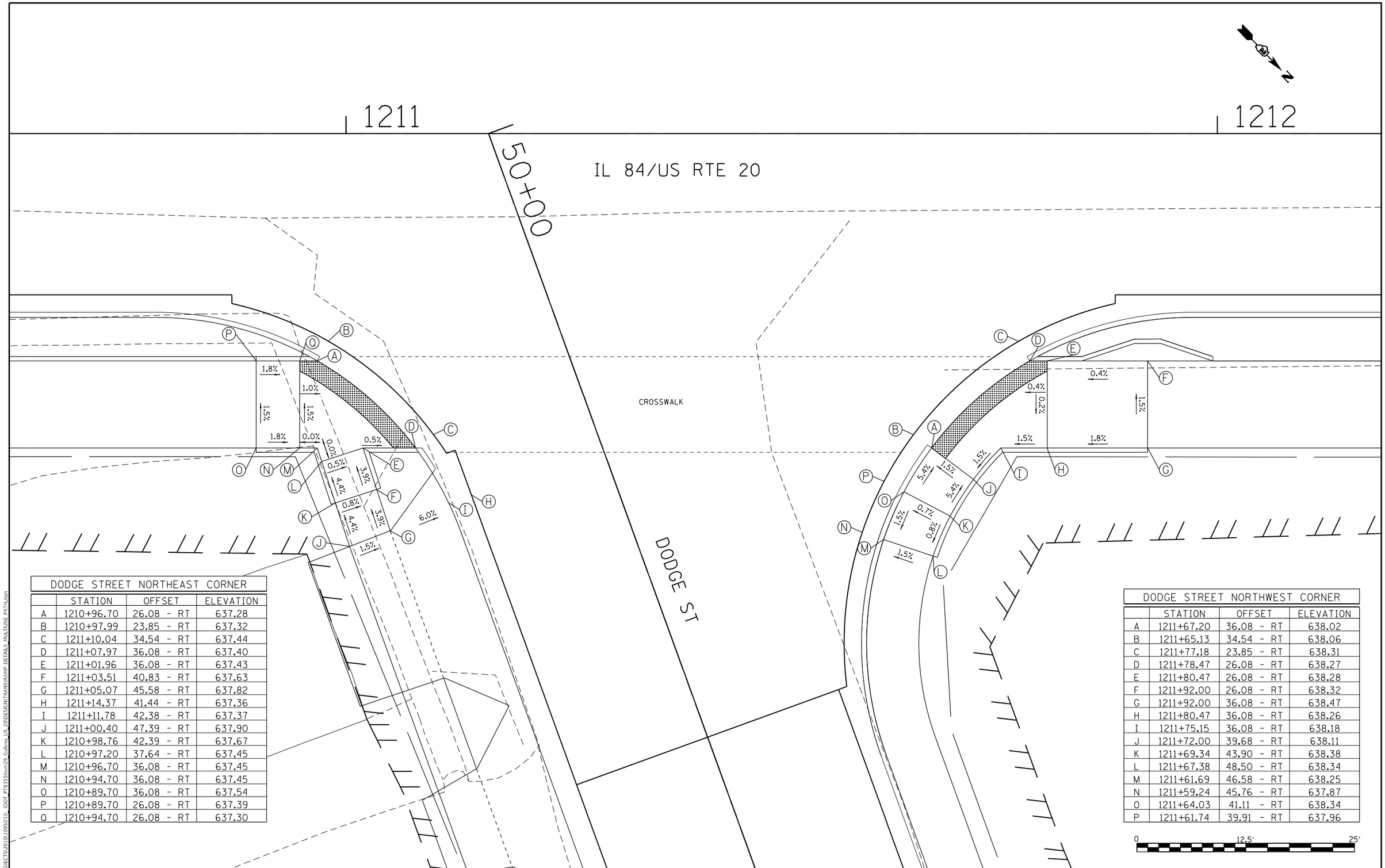

DODGE STREET NORTHEAST CORNER			
	STATION	OFFSET	ELEVATION
A	1210+96.70	26.08 - RT	637.28
B	1210+97.99	23.85 - RT	637.32
C	1211+10.04	34.54 - RT	637.44
D	1211+07.97	36.08 - RT	637.40
E	1211+01.96	36.08 - RT	637.43
F	1211+03.51	40.83 - RT	637.63
G	1211+05.07	45.58 - RT	637.82
H	1211+14.37	41.44 - RT	637.36
I	1211+11.78	42.38 - RT	637.37
J	1211+00.40	47.39 - RT	637.90
K	1210+98.76	42.39 - RT	637.67
L	1210+97.20	37.64 - RT	637.45
M	1210+96.70	36.08 - RT	637.45
N	1210+94.70	36.08 - RT	637.45
O	1210+89.70	36.08 - RT	637.54
P	1210+89.70	26.08 - RT	637.39
Q	1210+94.70	26.08 - RT	637.30

DODGE STREET NORTHWEST CORNER			
	STATION	OFFSET	ELEVATION
A	1211+67.20	36.08 - RT	638.02
B	1211+65.13	34.54 - RT	638.06
C	1211+77.18	23.85 - RT	638.31
D	1211+78.47	26.08 - RT	638.27
E	1211+80.47	26.08 - RT	638.28
F	1211+92.00	26.08 - RT	638.32
G	1211+92.00	36.08 - RT	638.47
H	1211+80.47	36.08 - RT	638.26
I	1211+75.15	36.08 - RT	638.18
J	1211+72.00	39.68 - RT	638.11
K	1211+69.34	43.90 - RT	638.38
L	1211+67.38	48.50 - RT	638.34
M	1211+61.69	46.58 - RT	638.25
N	1211+59.24	45.76 - RT	637.87
O	1211+64.03	41.11 - RT	638.34
P	1211+61.74	39.91 - RT	637.96

MODEL: Default
FILE NAME: S:\PROJECTS\2010\1095010_IDOT PTB155\Item29 Galena US 20\DESIGN\TRANS\RAMP DETAILS MULTIUSE PATH.dgn

WILLETT HOFMANN & ASSOCIATES INC
ENGINEERING ARCHITECTURE LAND SURVEYING
809 EAST 2ND STREET, DIXON, IL 61021-0367
T: 815-284-3301 DESIGN FIRM: #184-000910

USER NAME = mslick	DESIGNED - AMF	REVISED -	
	DRAWN - TJA	REVISED -	
PLOT SCALE = 120.0000 ' / in.	CHECKED - GFS	REVISED -	
PLOT DATE = 10/15/2021	DATE - 5/22/20	REVISED -	

STATE OF ILLINOIS
DEPARTMENT OF TRANSPORTATION

IL RTE 84/US 20
MULTI-USE PATH RAMP DETAILS

SCALE: 1"=5' | SHEET NO. 4 OF 12 SHEETS

F.A.P. RTE.	SECTION	COUNTY	TOTAL SHEETS	SHEET NO.
301	29R-1	JO DAVIESS	679	360
		CONTRACT NO. 64880		
		ILLINOIS	FED. AID PROJECT	

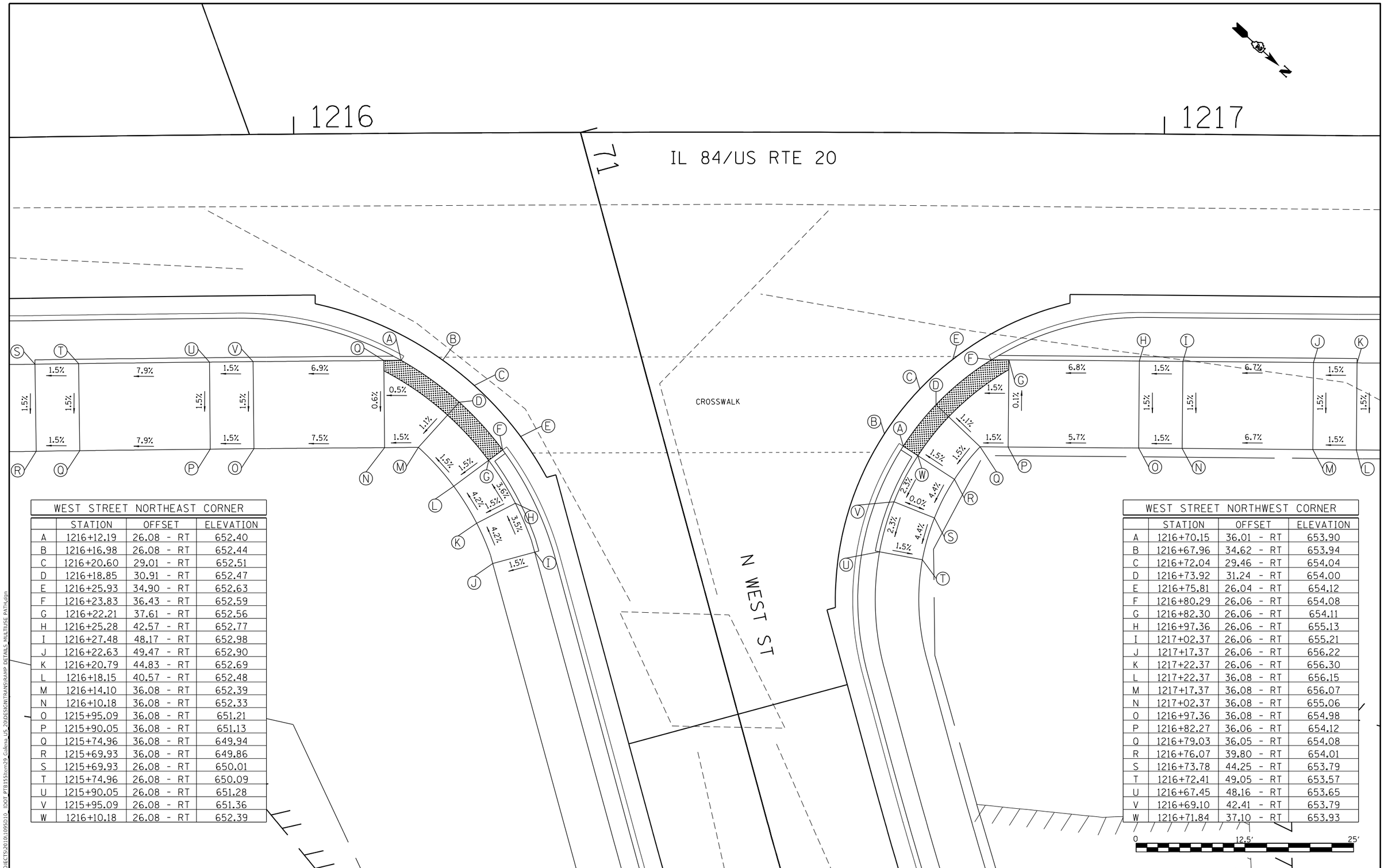

WEST STREET NORTHEAST CORNER			
	STATION	OFFSET	ELEVATION
A	1216+12.19	26.08 - RT	652.40
B	1216+16.98	26.08 - RT	652.44
C	1216+20.60	29.01 - RT	652.51
D	1216+18.85	30.91 - RT	652.47
E	1216+25.93	34.90 - RT	652.63
F	1216+23.83	36.43 - RT	652.59
G	1216+22.21	37.61 - RT	652.56
H	1216+25.28	42.57 - RT	652.77
I	1216+27.48	48.17 - RT	652.98
J	1216+22.63	49.47 - RT	652.90
K	1216+20.79	44.83 - RT	652.69
L	1216+18.15	40.57 - RT	652.48
M	1216+14.10	36.08 - RT	652.39
N	1216+10.18	36.08 - RT	652.33
O	1215+95.09	36.08 - RT	651.21
P	1215+90.05	36.08 - RT	651.13
Q	1215+74.96	36.08 - RT	649.94
R	1215+69.93	36.08 - RT	649.86
S	1215+69.93	26.08 - RT	650.01
T	1215+74.96	26.08 - RT	650.09
U	1215+90.05	26.08 - RT	651.28
V	1215+95.09	26.08 - RT	651.36
W	1216+10.18	26.08 - RT	652.39

WEST STREET NORTHWEST CORNER			
	STATION	OFFSET	ELEVATION
A	1216+70.15	36.01 - RT	653.90
B	1216+67.96	34.62 - RT	653.94
C	1216+72.04	29.46 - RT	654.04
D	1216+73.92	31.24 - RT	654.00
E	1216+75.81	26.04 - RT	654.12
F	1216+80.29	26.06 - RT	654.08
G	1216+82.30	26.06 - RT	654.11
H	1216+97.36	26.06 - RT	655.13
I	1217+02.37	26.06 - RT	655.21
J	1217+17.37	26.06 - RT	656.22
K	1217+22.37	26.06 - RT	656.30
L	1217+22.37	36.08 - RT	656.15
M	1217+17.37	36.08 - RT	656.07
N	1217+02.37	36.08 - RT	655.06
O	1216+97.36	36.08 - RT	654.98
P	1216+82.27	36.06 - RT	654.12
Q	1216+79.03	36.05 - RT	654.08
R	1216+76.07	39.80 - RT	654.01
S	1216+73.78	44.25 - RT	653.79
T	1216+72.41	49.05 - RT	653.57
U	1216+67.45	48.16 - RT	653.65
V	1216+69.10	42.41 - RT	653.79
W	1216+71.84	37.10 - RT	653.93

MODEL: Default
FILE NAME: S:\PROJECTS\2010\109D10_ IDOT PTB155\Item29 Galena US 20\DESIGN\TRANS\RAMP DETAILS MULTIUSE PATH.dgn

WILLETT HOFMANN & ASSOCIATES INC
ENGINEERING ARCHITECTURE LAND SURVEYING
809 EAST 2ND STREET, DIXON, IL 61021-0367
T: 815-284-3301 DESIGN FIRM: #184-000916

USER NAME = mslick	DESIGNED - AMF	REVISED -	
	DRAWN - TJA	REVISED -	
PLOT SCALE = 120.0000 ' / ft.	CHECKED - GFS	REVISED -	
PLOT DATE = 10/15/2021	DATE - 5/22/20	REVISED -	

STATE OF ILLINOIS
DEPARTMENT OF TRANSPORTATION

IL RTE 84/US 20
MULTI-USE PATH RAMP DETAILS

SCALE: 1"=5' | SHEET NO. 5 OF 12 SHEETS

F.A.P. RTE.	SECTION	COUNTY	TOTAL SHEETS	SHEET NO.
301	29R-1	JO DAVIESS	679	361
		CONTRACT NO. 64880		
		ILLINOIS	FED. AID PROJECT	

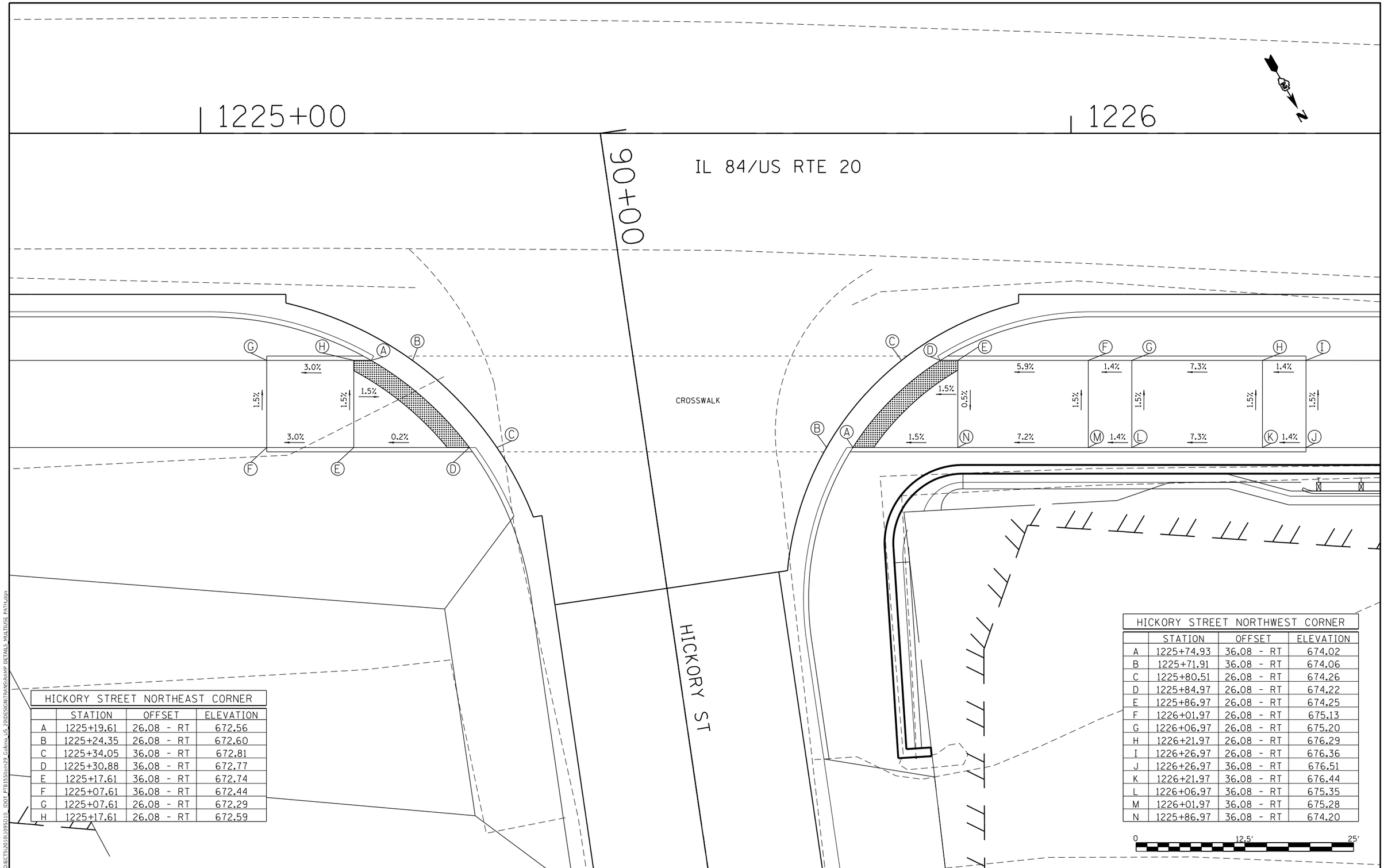

HICKORY STREET NORTHEAST CORNER			
	STATION	OFFSET	ELEVATION
A	1225+19.61	26.08 - RT	672.56
B	1225+24.35	26.08 - RT	672.60
C	1225+34.05	36.08 - RT	672.81
D	1225+30.88	36.08 - RT	672.77
E	1225+17.61	36.08 - RT	672.74
F	1225+07.61	36.08 - RT	672.44
G	1225+07.61	26.08 - RT	672.29
H	1225+17.61	26.08 - RT	672.59

HICKORY STREET NORTHWEST CORNER			
	STATION	OFFSET	ELEVATION
A	1225+74.93	36.08 - RT	674.02
B	1225+71.91	36.08 - RT	674.06
C	1225+80.51	26.08 - RT	674.26
D	1225+84.97	26.08 - RT	674.22
E	1225+86.97	26.08 - RT	674.25
F	1226+01.97	26.08 - RT	675.13
G	1226+06.97	26.08 - RT	675.20
H	1226+21.97	26.08 - RT	676.29
I	1226+26.97	26.08 - RT	676.36
J	1226+26.97	36.08 - RT	676.51
K	1226+21.97	36.08 - RT	676.44
L	1226+06.97	36.08 - RT	675.35
M	1226+01.97	36.08 - RT	675.28
N	1225+86.97	36.08 - RT	674.20

MODEL: Default
FILE NAME: S:\PROJECTS\2010\1095D10_IDOT PTB155\Item29 Galena US 20\DESIGN\TRANSR\RAMP DETAILS MULTIUSE PATH.dgn

WILLETT HOFMANN & ASSOCIATES INC
ENGINEERING ARCHITECTURE LAND SURVEYING
809 EAST 2ND STREET, DIXON, IL 61021-0367
T 815-284-2001 DESIGN FIRM: #184-000916

USER NAME = mslick	DESIGNED - AMF	REVISED -	
	DRAWN - TJA	REVISED -	
PLOT SCALE = 120.0000 ' / ft.	CHECKED - GFS	REVISED -	
PLOT DATE = 10/15/2021	DATE - 5/22/20	REVISED -	

STATE OF ILLINOIS
DEPARTMENT OF TRANSPORTATION

IL RTE 84/US 20
MULTI-USE PATH RAMP DETAILS

SCALE: 1"=5' | SHEET NO. 6 OF 12 SHEETS

F.A.P. RTE.	SECTION	COUNTY	TOTAL SHEETS	SHEET NO.
301	29R-1	JO DAVIESS	679	362
		CONTRACT NO. 64880		
		ILLINOIS	FED. AID PROJECT	

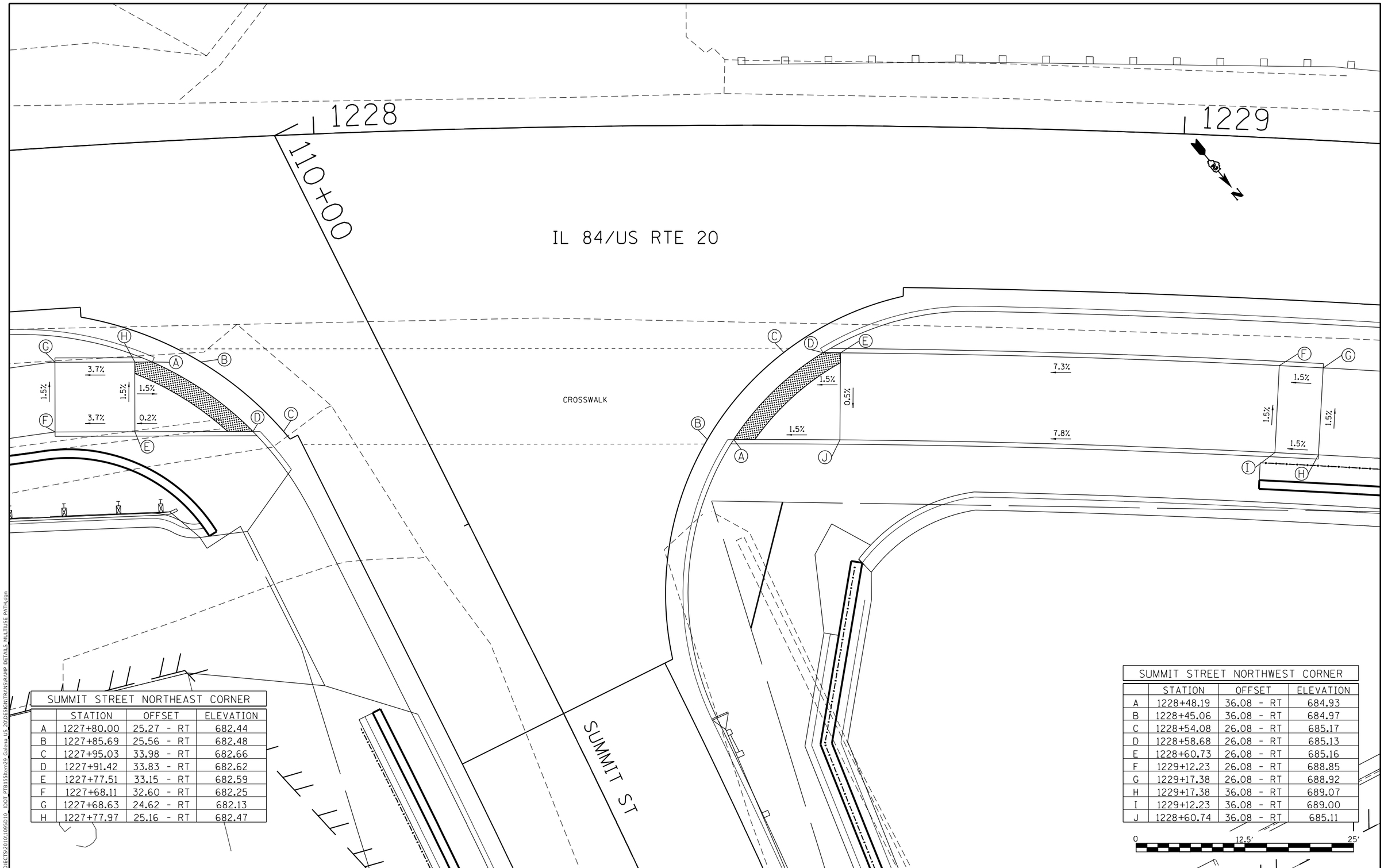

SUMMIT STREET NORTHEAST CORNER

	STATION	OFFSET	ELEVATION
A	1227+80.00	25.27 - RT	682.44
B	1227+85.69	25.56 - RT	682.48
C	1227+95.03	33.98 - RT	682.66
D	1227+91.42	33.83 - RT	682.62
E	1227+77.51	33.15 - RT	682.59
F	1227+68.11	32.60 - RT	682.25
G	1227+68.63	24.62 - RT	682.13
H	1227+77.97	25.16 - RT	682.47

SUMMIT STREET NORTHWEST CORNER

	STATION	OFFSET	ELEVATION
A	1228+48.19	36.08 - RT	684.93
B	1228+45.06	36.08 - RT	684.97
C	1228+54.08	26.08 - RT	685.17
D	1228+58.68	26.08 - RT	685.13
E	1228+60.73	26.08 - RT	685.16
F	1229+12.23	26.08 - RT	688.85
G	1229+17.38	26.08 - RT	688.92
H	1229+17.38	36.08 - RT	689.07
I	1229+12.23	36.08 - RT	689.00
J	1228+60.74	36.08 - RT	685.11

MODEL: Default
FILE NAME: S:\PROJECTS\2010\1095010_IDOT PTB155\Item29 Galena US 20\DESIGN\TRANS\RAMP DETAILS MULTIUSE PATH.dgn

WILLETT HOFMANN & ASSOCIATES INC
ENGINEERING ARCHITECTURE LAND SURVEYING
809 EAST 2ND STREET, DIXON, IL 61021-0367
P: (815-284-3300) DESIGN FIRM: #184-000916

USER NAME = mslick	DESIGNED - AMF	REVISED -	
	DRAWN - TJA	REVISED -	
PLOT SCALE = 120.0000 ' / ft.	CHECKED - GFS	REVISED -	
PLOT DATE = 10/15/2021	DATE - 5/22/20	REVISED -	

STATE OF ILLINOIS
DEPARTMENT OF TRANSPORTATION

IL RTE 84/US 20
MULTI-USE PATH RAMP DETAILS

SCALE: 1"=5' | SHEET NO. 7 OF 12 SHEETS

F.A.P. RTE.	SECTION	COUNTY	TOTAL SHEETS	SHEET NO.
301	29R-1	JO DAVIESS	679	363
		CONTRACT NO. 64880		
		ILLINOIS	FED. AID PROJECT	

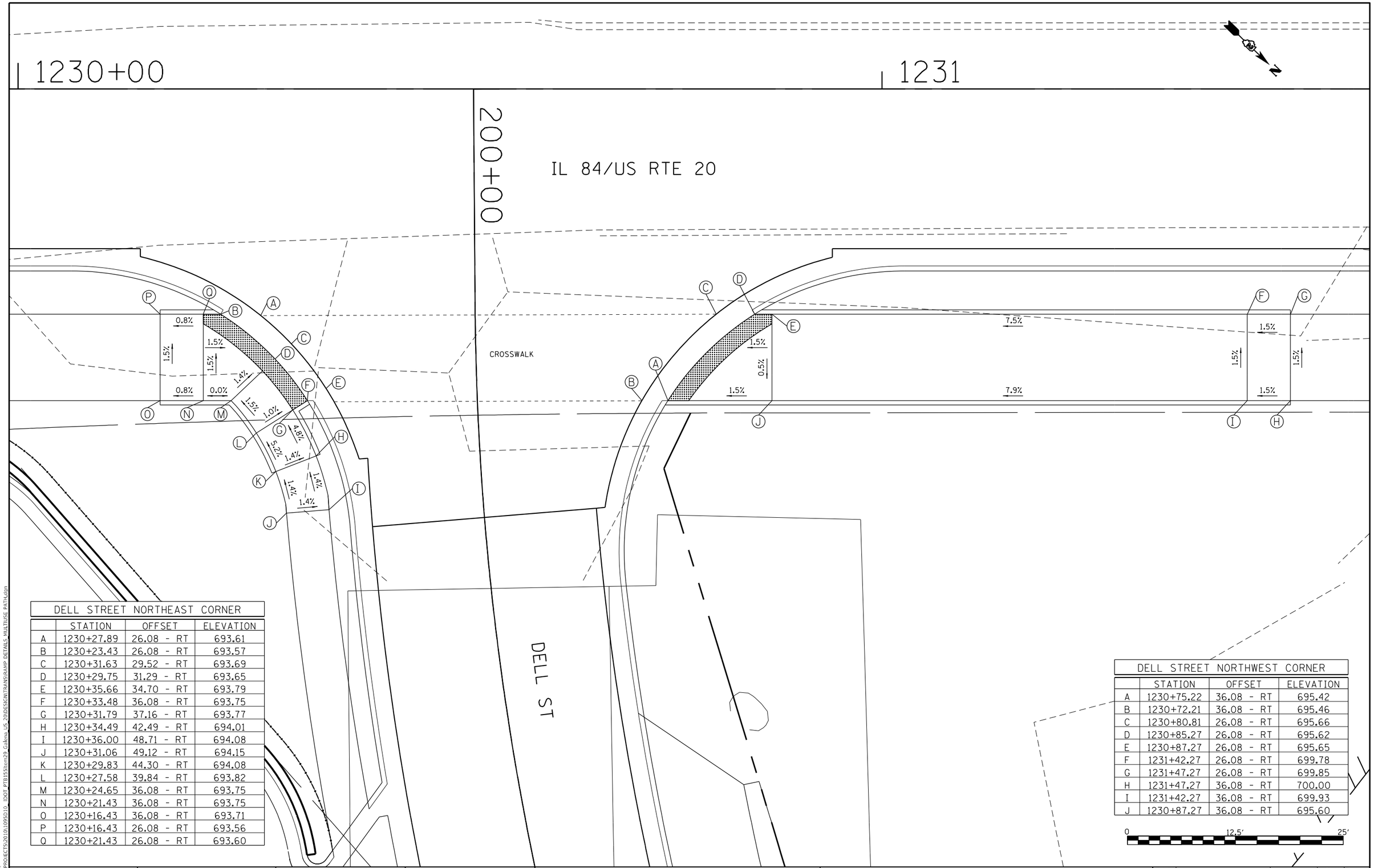

DELL STREET NORTHEAST CORNER			
	STATION	OFFSET	ELEVATION
A	1230+27.89	26.08 - RT	693.61
B	1230+23.43	26.08 - RT	693.57
C	1230+31.63	29.52 - RT	693.69
D	1230+29.75	31.29 - RT	693.65
E	1230+35.66	34.70 - RT	693.79
F	1230+33.48	36.08 - RT	693.75
G	1230+31.79	37.16 - RT	693.77
H	1230+34.49	42.49 - RT	694.01
I	1230+36.00	48.71 - RT	694.08
J	1230+31.06	49.12 - RT	694.15
K	1230+29.83	44.30 - RT	694.08
L	1230+27.58	39.84 - RT	693.82
M	1230+24.65	36.08 - RT	693.75
N	1230+21.43	36.08 - RT	693.75
O	1230+16.43	36.08 - RT	693.71
P	1230+16.43	26.08 - RT	693.56
Q	1230+21.43	26.08 - RT	693.60

DELL STREET NORTHWEST CORNER			
	STATION	OFFSET	ELEVATION
A	1230+75.22	36.08 - RT	695.42
B	1230+72.21	36.08 - RT	695.46
C	1230+80.81	26.08 - RT	695.66
D	1230+85.27	26.08 - RT	695.62
E	1230+87.27	26.08 - RT	695.65
F	1231+42.27	26.08 - RT	699.78
G	1231+47.27	26.08 - RT	699.85
H	1231+47.27	36.08 - RT	700.00
I	1231+42.27	36.08 - RT	699.93
J	1230+87.27	36.08 - RT	695.60

MODEL: Default
FILE NAME: S:\PROJECTS\2010\0095D10_IDOT PTB 155 Item 29 Galena US 20\DESIGN\TRANS\RAMP DETAILS MULTI USE PATH.dgn

WILLETT HOFMANN & ASSOCIATES INC
ENGINEERING ARCHITECTURE LAND SURVEYING
899 EAST 2ND STREET, DIXON, IL 61021-0367
T 815-284-3301 DESIGN FIRM: 184-000710

USER NAME = mslick	DESIGNED - AMF	REVISED -	
	DRAWN - TJA	REVISED -	
PLOT SCALE = 120.0000 ' / in.	CHECKED - GFS	REVISED -	
PLOT DATE = 10/15/2021	DATE - 5/22/20	REVISED -	

STATE OF ILLINOIS
DEPARTMENT OF TRANSPORTATION

IL RTE 84/US 20
MULTI-USE PATH RAMP DETAILS

SCALE: 1"=5' | SHEET NO. 8 OF 12 SHEETS

F.A.P. RTE.	SECTION	COUNTY	TOTAL SHEETS	SHEET NO.
301	29R-1	JO DAVIESS	679	364
		CONTRACT NO. 64880		
		ILLINOIS	FED. AID PROJECT	

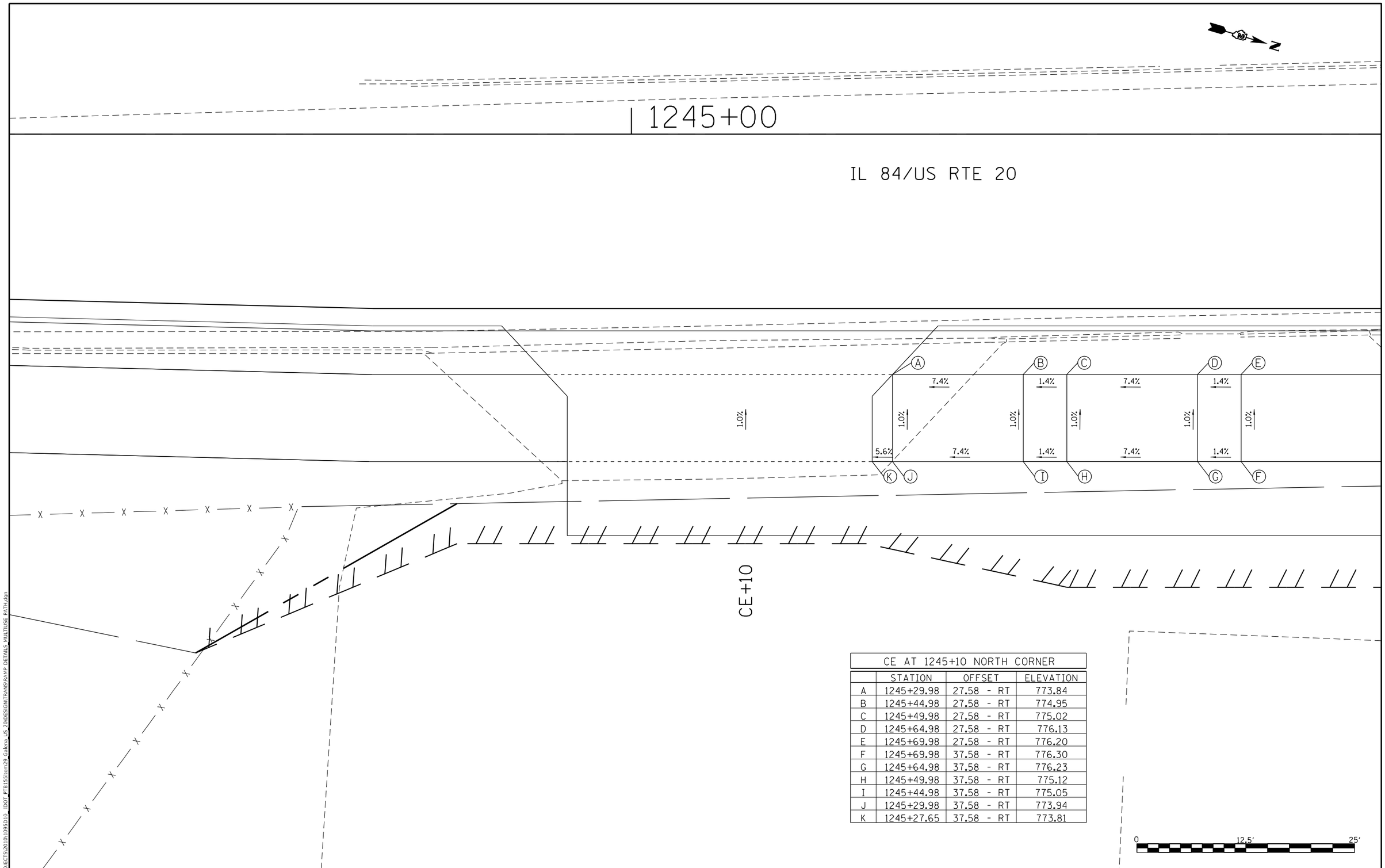

CE AT 1245+10 NORTH CORNER			
	STATION	OFFSET	ELEVATION
A	1245+29.98	27.58 - RT	773.84
B	1245+44.98	27.58 - RT	774.95
C	1245+49.98	27.58 - RT	775.02
D	1245+64.98	27.58 - RT	776.13
E	1245+69.98	27.58 - RT	776.20
F	1245+69.98	37.58 - RT	776.30
G	1245+64.98	37.58 - RT	776.23
H	1245+49.98	37.58 - RT	775.12
I	1245+44.98	37.58 - RT	775.05
J	1245+29.98	37.58 - RT	773.94
K	1245+27.65	37.58 - RT	773.81

MODEL: Default
FILE NAME: S:\PROJECTS\2010\1095010_IDOT_PTB153\Item29 Galena US 20\DESIGN\TRANS\RAMP DETAILS MULTIUSE PATH.dgn

WILLETT HOFMANN & ASSOCIATES INC
ENGINEERING ARCHITECTURE LAND SURVEYING
809 EAST 2ND STREET, DIXON, IL 61021-0367
T. 815-284-3301 DESIGN FIRM: #184-000916

USER NAME = mslick	DESIGNED - AMF	REVISED -	
	DRAWN - TJA	REVISED -	
PLOT SCALE = 120.0000 ' / ft.	CHECKED - GFS	REVISED -	
PLOT DATE = 10/15/2021	DATE - 5/22/20	REVISED -	

STATE OF ILLINOIS
DEPARTMENT OF TRANSPORTATION

IL RTE 84/US 20
MULTI-USE PATH RAMP DETAILS

SCALE: 1"=5' | SHEET NO. 9 OF 12 SHEETS

F.A.P. RTE.	SECTION	COUNTY	TOTAL SHEETS	SHEET NO.
301	29R-1	JO DAVIESS	679	365
		CONTRACT NO. 64880		
	ILLINOIS	FED. AID PROJECT		

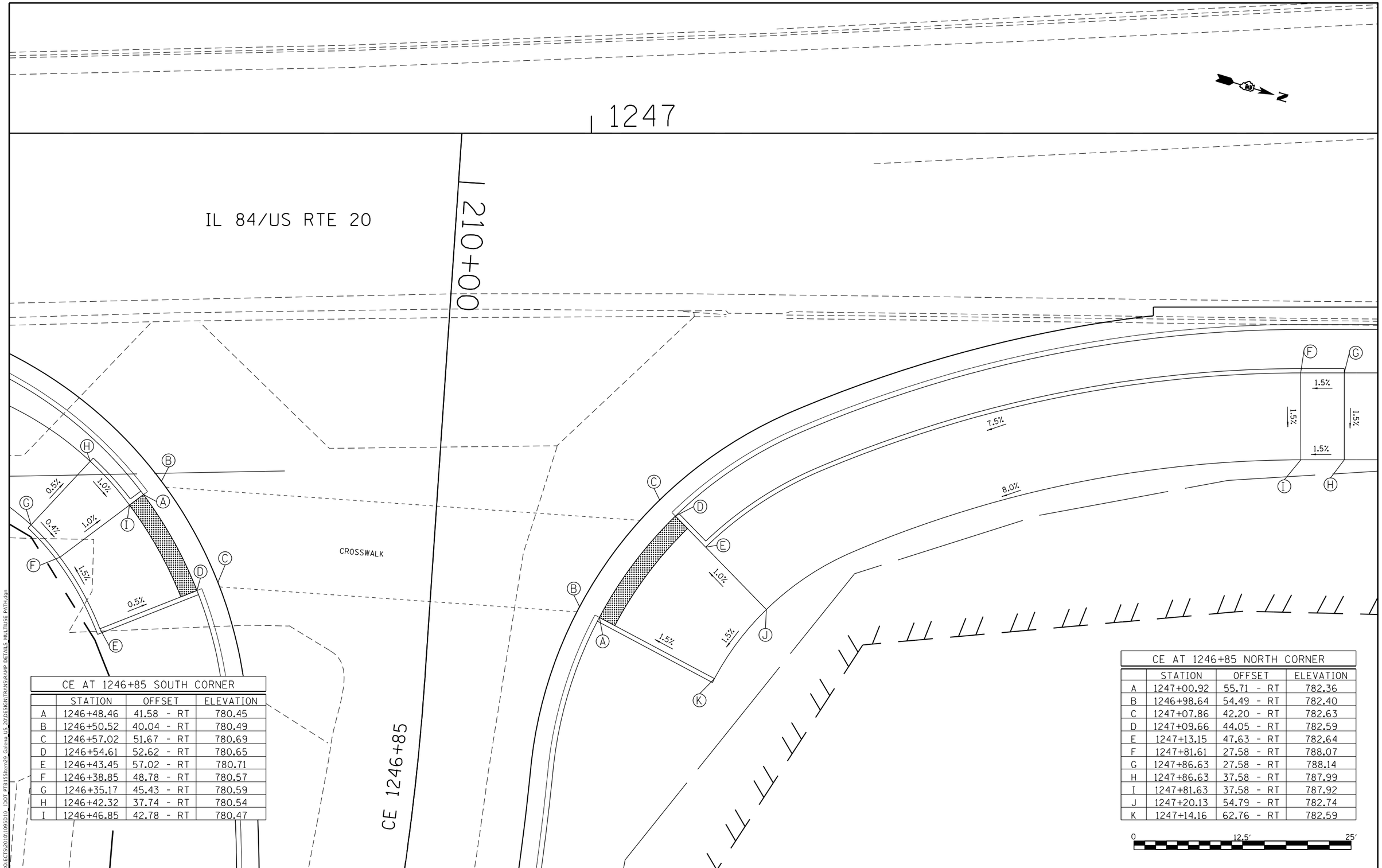

CE AT 1246+85 SOUTH CORNER			
	STATION	OFFSET	ELEVATION
A	1246+48.46	41.58 - RT	780.45
B	1246+50.52	40.04 - RT	780.49
C	1246+57.02	51.67 - RT	780.69
D	1246+54.61	52.62 - RT	780.65
E	1246+43.45	57.02 - RT	780.71
F	1246+38.85	48.78 - RT	780.57
G	1246+35.17	45.43 - RT	780.59
H	1246+42.32	37.74 - RT	780.54
I	1246+46.85	42.78 - RT	780.47

CE AT 1246+85 NORTH CORNER			
	STATION	OFFSET	ELEVATION
A	1247+00.92	55.71 - RT	782.36
B	1246+98.64	54.49 - RT	782.40
C	1247+07.86	42.20 - RT	782.63
D	1247+09.66	44.05 - RT	782.59
E	1247+13.15	47.63 - RT	782.64
F	1247+81.61	27.58 - RT	788.07
G	1247+86.63	27.58 - RT	788.14
H	1247+86.63	37.58 - RT	787.99
I	1247+81.63	37.58 - RT	787.92
J	1247+20.13	54.79 - RT	782.74
K	1247+14.16	62.76 - RT	782.59

MODEL: Default
FILE NAME: S:\PROJECTS\2010\1095D10_IDOT_PTB155Item29_Galena_US_20\DESIGN\TRANS\RAMP DETAILS_MULTIUSE PATH.dgn

WILLETT HOFMANN & ASSOCIATES INC
ENGINEERING ARCHITECTURE LAND SURVEYING
809 EAST 2ND STREET, DIXON, IL 61021-0362
P: (815) 284-3300 DESIGN FIRM: #184-000916

USER NAME = mslick	DESIGNED - AMF	REVISED -	
	DRAWN - TJA	REVISED -	
PLOT SCALE = 120.0000 ' / ft.	CHECKED - GFS	REVISED -	
PLOT DATE = 10/15/2021	DATE - 5/22/20	REVISED -	

STATE OF ILLINOIS
DEPARTMENT OF TRANSPORTATION

IL RTE 84/US 20
MULTI-USE PATH RAMP DETAILS

SCALE: 1"=5' | SHEET NO. 10 OF 12 SHEETS

F.A.P. RTE.	SECTION	COUNTY	TOTAL SHEETS	SHEET NO.
301	29R-1	JO DAVIESS	679	366
		CONTRACT NO. 64880		
		ILLINOIS	FED. AID PROJECT	

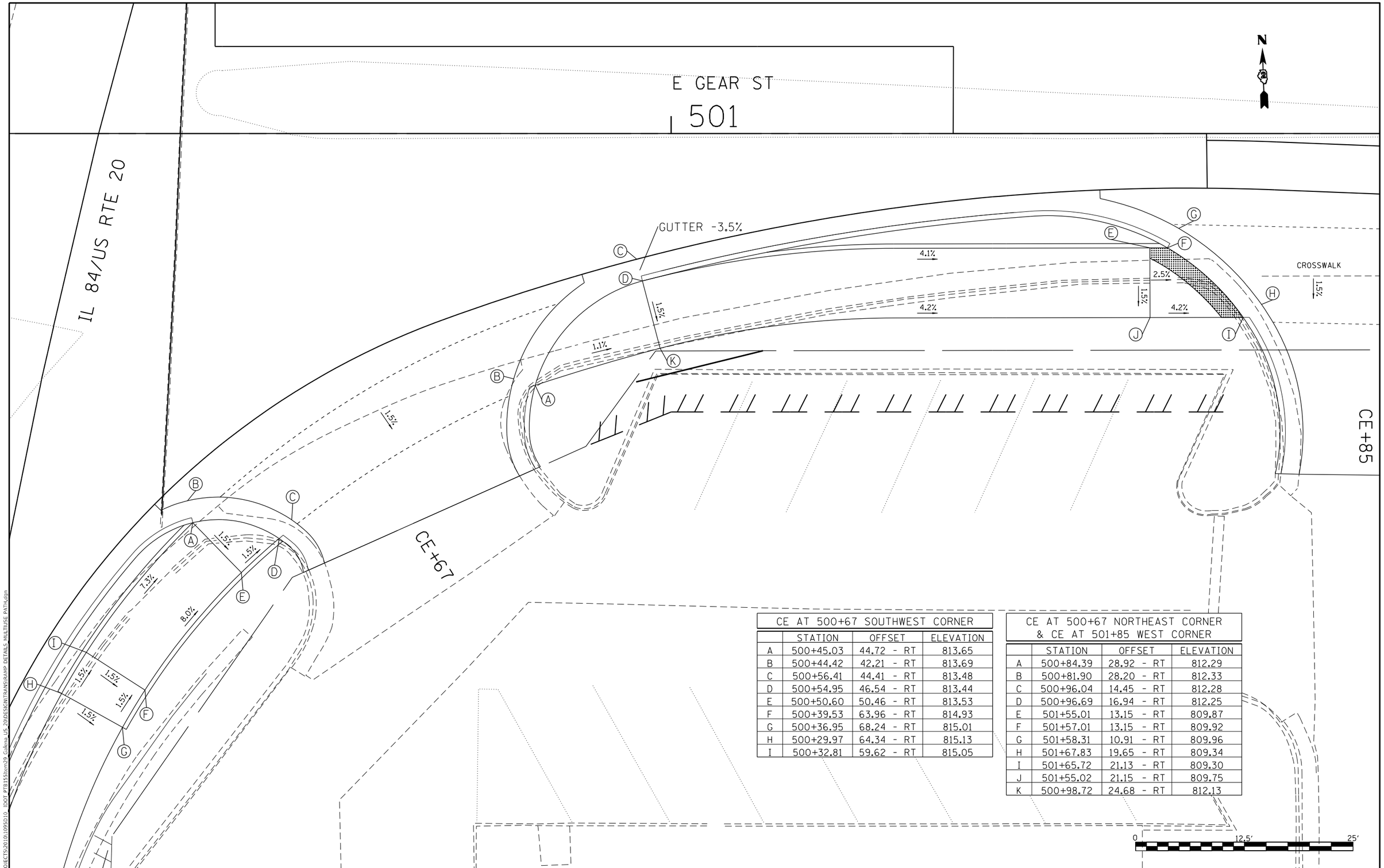

CE AT 500+67 SOUTHWEST CORNER			
	STATION	OFFSET	ELEVATION
A	500+45.03	44.72 - RT	813.65
B	500+44.42	42.21 - RT	813.69
C	500+56.41	44.41 - RT	813.48
D	500+54.95	46.54 - RT	813.44
E	500+50.60	50.46 - RT	813.53
F	500+39.53	63.96 - RT	814.93
G	500+36.95	68.24 - RT	815.01
H	500+29.97	64.34 - RT	815.13
I	500+32.81	59.62 - RT	815.05

CE AT 500+67 NORTHEAST CORNER & CE AT 501+85 WEST CORNER			
	STATION	OFFSET	ELEVATION
A	500+84.39	28.92 - RT	812.29
B	500+81.90	28.20 - RT	812.33
C	500+96.04	14.45 - RT	812.28
D	500+96.69	16.94 - RT	812.25
E	501+55.01	13.15 - RT	809.87
F	501+57.01	13.15 - RT	809.92
G	501+58.31	10.91 - RT	809.96
H	501+67.83	19.65 - RT	809.34
I	501+65.72	21.13 - RT	809.30
J	501+55.02	21.15 - RT	809.75
K	500+98.72	24.68 - RT	812.13

MODEL: Default
FILE NAME: S:\PROJECTS\2010\1095D10_IDOT PTB135\Item39 Galena US 20\DESIGN\TRANS\RAMP DETAILS MULTIUSE PATH.dgn

WILLETT HOFMANN & ASSOCIATES INC
ENGINEERING ARCHITECTURE LAND SURVEYING
809 EAST 2ND STREET, DIXON, IL 61021-0367
T. 815-284-3301 DESIGN FIRM: #184-000910

USER NAME = mslick	DESIGNED - AMF	REVISED -	
	DRAWN - TJA	REVISED -	
PLOT SCALE = 120.0000 ' / in.	CHECKED - GFS	REVISED -	
PLOT DATE = 10/15/2021	DATE - 5/22/20	REVISED -	

STATE OF ILLINOIS
DEPARTMENT OF TRANSPORTATION

IL RTE 84/US 20
MULTI-USE PATH RAMP DETAILS

SCALE: 1"=5' | SHEET NO. 11 OF 12 SHEETS

F.A.P. RTE.	SECTION	COUNTY	TOTAL SHEETS	SHEET NO.
301	29R-1	JO DAVIESS	679	367
		CONTRACT NO. 64880		
		ILLINOIS	FED. AID PROJECT	

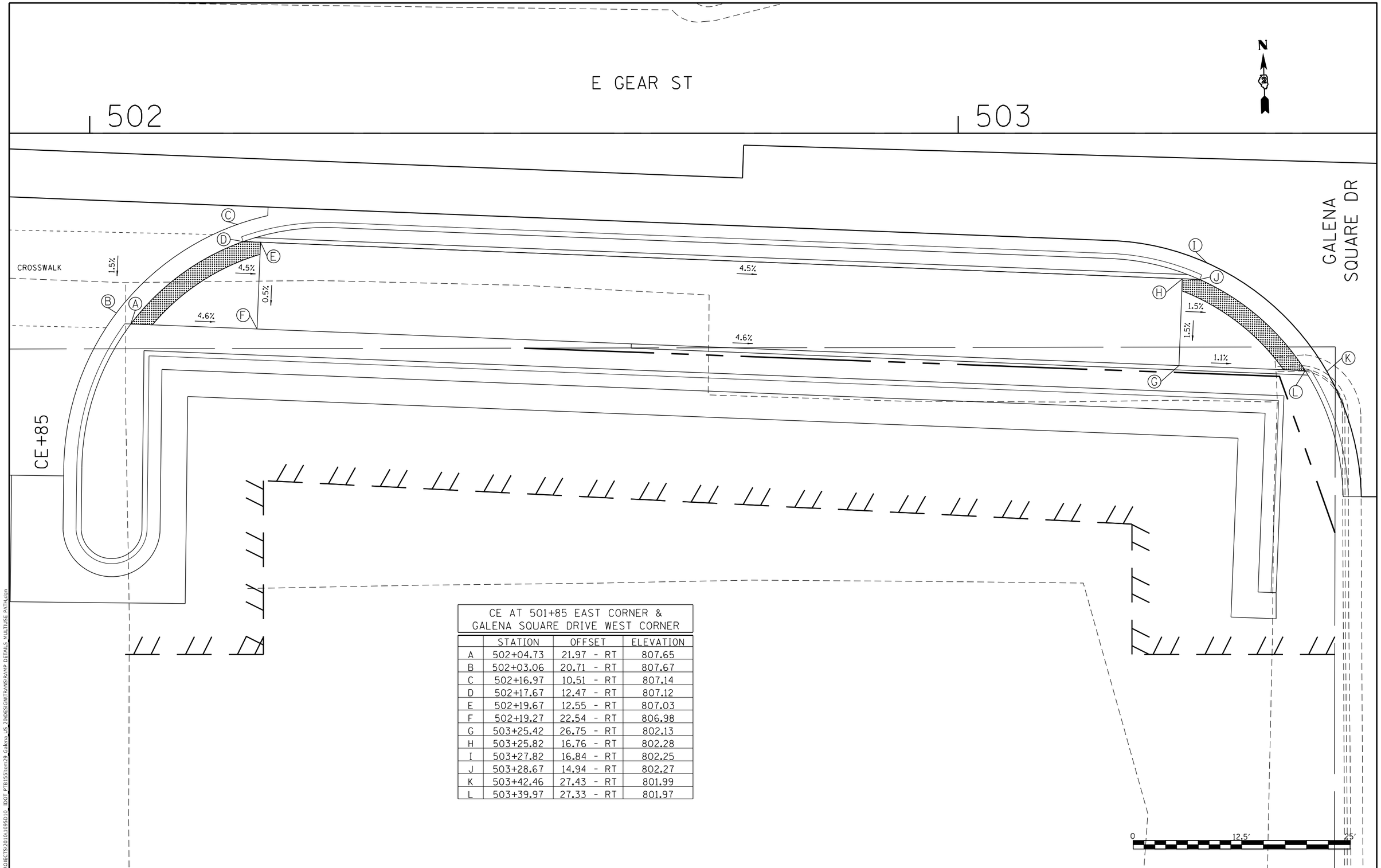

CE AT 501+85 EAST CORNER & GALENA SQUARE DRIVE WEST CORNER			
	STATION	OFFSET	ELEVATION
A	502+04.73	21.97 - RT	807.65
B	502+03.06	20.71 - RT	807.67
C	502+16.97	10.51 - RT	807.14
D	502+17.67	12.47 - RT	807.12
E	502+19.67	12.55 - RT	807.03
F	502+19.27	22.54 - RT	806.98
G	503+25.42	26.75 - RT	802.13
H	503+25.82	16.76 - RT	802.28
I	503+27.82	16.84 - RT	802.25
J	503+28.67	14.94 - RT	802.27
K	503+42.46	27.43 - RT	801.99
L	503+39.97	27.33 - RT	801.97

MODEL: Default
FILE NAME: S:\PROJECTS\2010\109510_IDOT PTB155\Item29 Galena US 20\DESIGN\TRANS\RAMP DETAILS MULTIUSE PATH.dgn

WILLETT HOFMANN & ASSOCIATES INC
ENGINEERING ARCHITECTURE LAND SURVEYING
909 EAST 2ND STREET, DIXON, IL 61021-0367
T: 815-284-3300 DESIGN FIRM: 184-000715

USER NAME = mslick	DESIGNED - AMF	REVISED -	
	DRAWN - TJA	REVISED -	
PLOT SCALE = 120.0000 ' / ft.	CHECKED - GFS	REVISED -	
PLOT DATE = 10/15/2021	DATE - 5/22/20	REVISED -	

STATE OF ILLINOIS
DEPARTMENT OF TRANSPORTATION

IL RTE 84/US 20
MULTI-USE PATH RAMP DETAILS

SCALE: 1"=5' | SHEET NO. 12 OF 12 SHEETS

F.A.P. RTE.	SECTION	COUNTY	TOTAL SHEETS	SHEET NO.
301	29R-1	JO DAVIESS	679	368
		CONTRACT NO. 64880		
		ILLINOIS	FED. AID PROJECT	

SHEET NO. 11
OF 22 SHEETS

ROUTE NO.	SECTION	COUNTY	TOTAL SHEETS	SHEET NO.
GRR	78-00031-00-BR	JO DAVIESS	22	15
FED. ROAD DIST. NO.		ILLINOIS	PROJECT	

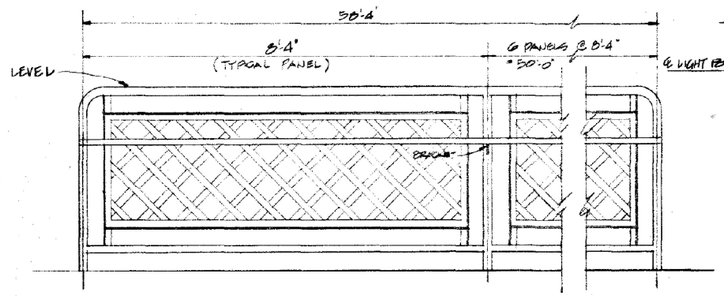

RAILING - NORTH SIDE OF 10' WALK
(VIEWED FROM WALK SIDE)
⊥ THUS

NOTE! INSTALL RAILING EXPANSION JOINT AT POST NEAREST CENTER

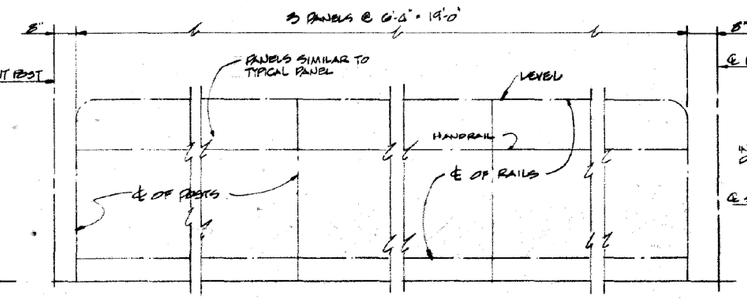

RAILING - SOUTH SIDE OF 10' WALK
⊥ THUS

FOR DETAIL DIMENSIONS SEE SHEET 12 OF 22.

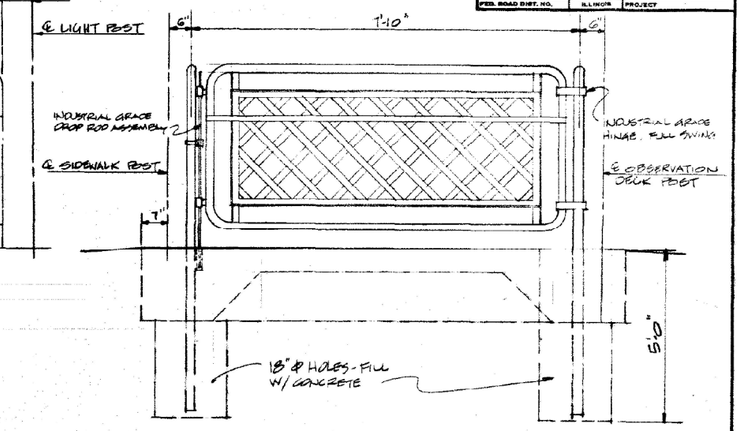

GATE AT 10' WALK
AT E. END OF 10' WALK - VIEWED FROM INSIDE
⊥ THUS, ⊥ OPPOSITE HAND

ALL HANDRAIL POSTS SHALL BE VERTICAL

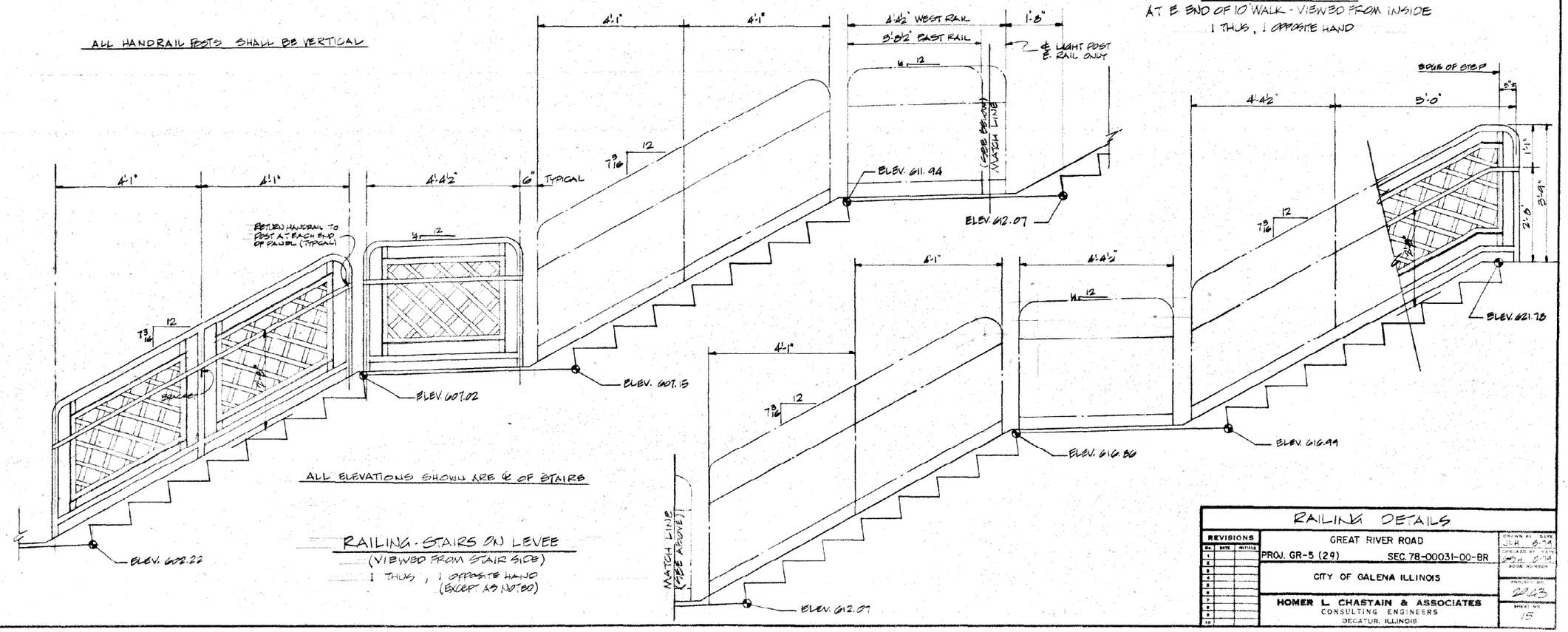

ALL ELEVATIONS SHOWN ARE ℄ OF STAIRS

RAILING - STAIRS ON LEVEE
(VIEWED FROM STAIR SIDE)
⊥ THUS, ⊥ OPPOSITE HAND
(EXCEPT AS NOTED)

RAILING DETAILS

REVISIONS		
NO.	DATE	INITIALS
1		
2		
3		
4		
5		
6		
7		
8		
9		
10		

GREAT RIVER ROAD
PROJ. GR-5 (29) SEC. 78-00031-00-BR
CITY OF GALENA ILLINOIS

HOMER L. CHASTAIN & ASSOCIATES
CONSULTING ENGINEERS
DECATUR, ILLINOIS

DRAWN BY: JLR DATE: 6-7-94
CHECKED BY: GFS DATE: 6-7-94
SIGN NUMBER
PROJECT NO. 2143
SHEET NO. 15

MODEL: Default
FILE NAME: S:\PROJECTS\2010\1095110_IDOT_PTB155\Item29 Galena US-20\DESIGN\TRANS\Detail\-Pipe-Handrail.dgn
W:\DOWNTOWN TECHNOLOGY\IDOT\DOCUMENTS\IDOT OFFICE\STANDARDS\PROJECT FOLDER\CAD\STANDARDS\2008 PS-PIPE-RAILING.dgn

WILLETT HOFMANN & ASSOCIATES INC
ENGINEERING ARCHITECTURE LAND SURVEYING
809 EAST 2ND STREET, DIXON, IL 61021-0367
T: 815-284-3300 DESIGN FIRM: #184-000716

USER NAME = mslick	DESIGNED - AMF	REVISED -	
	DRAWN - TJA	REVISED -	
PLOT SCALE = 480.0000 ' / in.	CHECKED - GFS	REVISED -	
PLOT DATE = 10/15/2021	DATE - 5/22/20	REVISED -	

STATE OF ILLINOIS
DEPARTMENT OF TRANSPORTATION

PIPE HANDRAIL, SPECIAL DETAIL

SHEET 1 OF 2 SHEETS

F.A.P. RTE.	SECTION	COUNTY	TOTAL SHEETS	SHEET NO.
301	29R-1	JO DAVIESS	679	369
		CONTRACT NO. 64880		
		ILLINOIS	FED. AID PROJECT	

SHEET NO. 12
OF 22 SHEETS

ROUTE NO.	SECTION	COUNTY	TOTAL SHEETS	SHEET NO.
G.R.R.	78-00031-00-BR	JO DAVIESS	26	16
FED. ROAD DIST. NO.		ILLINOIS	PROJECT	

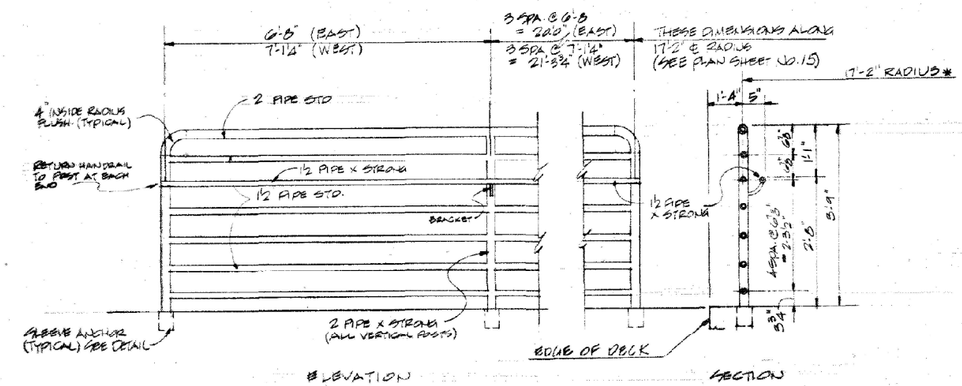

RAIL AT OBSERVATION DECK
(VIEWED FROM DECK)

NOTE: SEE SHEET NO. 21 FOR LIGHT POST ANCHORAGE DETAIL

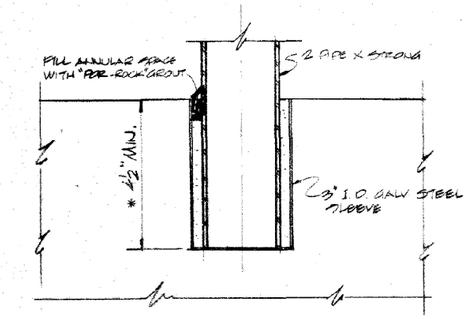

DETAIL OF RAIL POST SLEEVE ANCHOR
(TYPICAL AT ALL RAIL POSTS)
* 6" MIN. FOR OBSERVATION RAIL ONLY

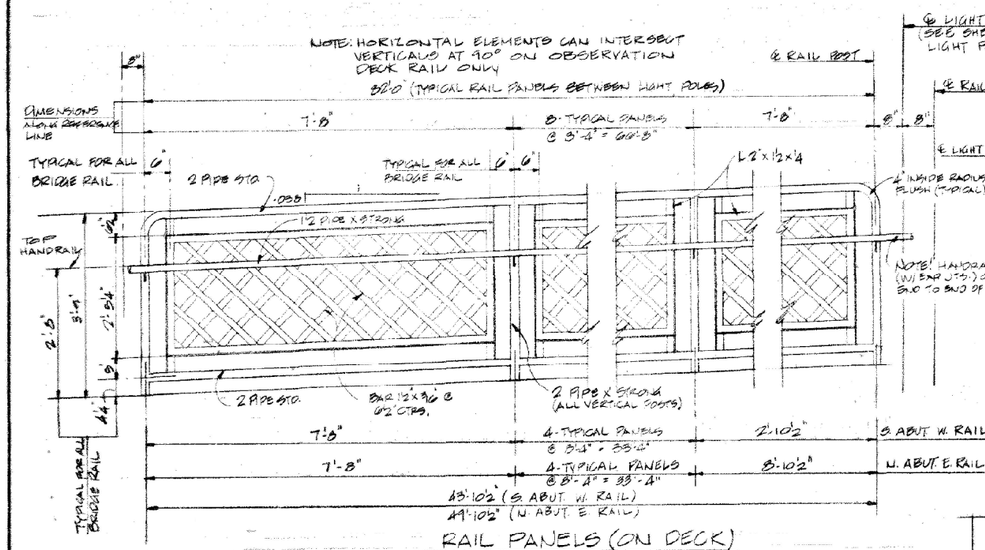

RAIL PANELS (ON DECK)

3 REQUIRED AS SHOWN (32'-0" LENGTH), 3 OPP. HAND
1 REQUIRED AS SHOWN (43'-10½" LENGTH)
1 REQUIRED OPP HAND (49'-10½" LENGTH)

NOTE! EXPANSION JOINT IS REQUIRED NEAR VERTICAL RAIL POST NEAREST CENTER OF 32'-0" LENGTH. EXPANSION JOINT REQUIRED IN HANDRAIL AT THIS LOCATION.

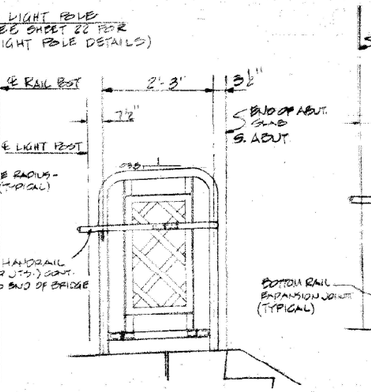

RAIL S. ABUT. E. RAIL

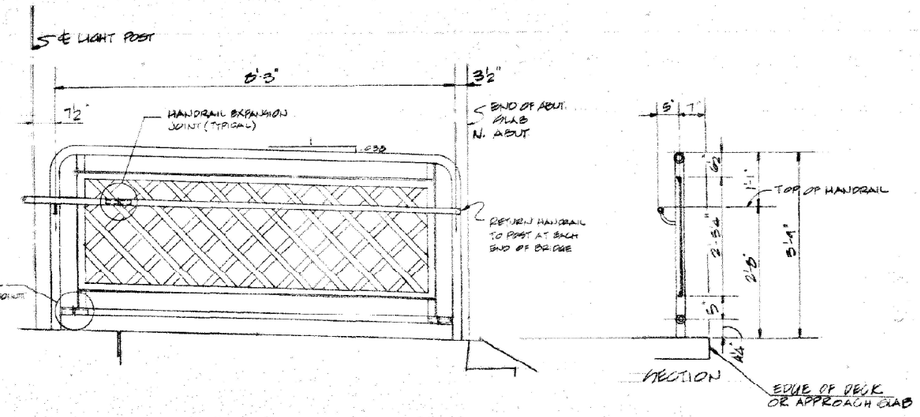

RAIL N. ABUT. W. RAIL

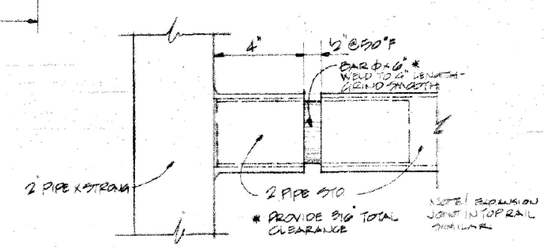

EXPANSION JOINT IN BOTTOM RAIL

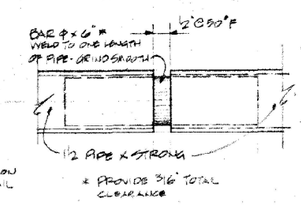

EXPANSION JOINT IN HANDRAIL

NOTE! ALL BRIDGE RAIL PANELS AS SHOWN VIEWED FROM BRIDGE DECK.

RAILING DETAILS

REVISIONS		
NO.	DATE	INITIALS
1		
2		
3		
4		
5		
6		
7		
8		
9		
10		

GREAT RIVER ROAD
PROJ. GR-5 (24) SEC. 78-00031-00-BR
CITY OF GALENA ILLINOIS
HOMER L. CHASTAIN & ASSOCIATES
CONSULTING ENGINEERS
DECATUR, ILLINOIS

DRAWN BY: MJL DATE: 1-14
CHECKED BY: GFS DATE: 1-14
BRIDGE NUMBERS
PROJECT NO. 2343
SHEET NO. 16

MODEL: Default
FILE NAME: S:\PROJECTS\2010\0109\D10_IDOT PTB155\Item29 Galena_US 20\DESIGN\TRANS\details-Pipe-Handrail.dgn
V:\COMMON\TECH\Illinois.gov\WIDOT\Documents\DOT\Checksheet 2\Projects\72000\SCRIPTS\SHEETS\12\06-15-21-Handrails.dgn

WILLETT HOFMANN & ASSOCIATES INC ENGINEERING ARCHITECTURE LAND SURVEYING 909 EAST 2ND STREET, DIXON, IL 61021-0367 T: 815-284-3300 DESIGN FIRM: 184-000710	USER NAME = mslick	DESIGNED - AMF	REVISED -
		DRAWN - TJA	REVISED -
	PLOT SCALE = 480.0000 ' / ft.	CHECKED - GFS	REVISED -
	PLOT DATE = 10/15/2021	DATE - 5/22/20	REVISED -

STATE OF ILLINOIS
DEPARTMENT OF TRANSPORTATION

PIPE HANDRAIL, SPECIAL DETAIL

SHEET 2 OF 2 SHEETS

F.A.P. RTE.	SECTION	COUNTY	TOTAL SHEETS	SHEET NO.
301	29R-1	JO DAVIESS	679	370

CONTRACT NO. 64880
ILLINOIS FED. AID PROJECT

MANHOLE WITH INLET SPECIAL NO. 5 LID

NOTES

MANHOLES AND THE ASSOCIATED FLAT SLAB TOPS SHALL BE CONSTRUCTED ACCORDING TO THE FOLLOWING, APPLICABLE HIGHWAYS STANDARDS:

PRECAST MANHOLE, TYPE A, 8′ DIAMETER:	602416
PRECAST MANHOLE, TYPE A, 9′ DIAMETER:	602421
PRECAST MANHOLE, TYPE A, 10′ DIAMETER:	602426

MANHOLE STEPS SHALL BE PROVIDED IN ALL STRUCTURES EXCEEDING 5′ IN DEPTH.

PRECAST MANUFACTURER SHALL OFFSET THE MANHOLE CASTING IN THE INLET SPECIAL NO. 5 CLASS SI TOP SLAB TO ALLOW FOR ALIGNING WITH THE MANHOLE ACCESS IN THE PRECAST MANHOLE FLAT SLAB TOP. THIS WILL ALLOW CONTINUOUS ACCESS FROM THE SURFACE TO THE MANHOLE BOTTOM VIA MANHOLE STEPS.

PREFORMED FLEXIBLE JOINT SEALANT MEETING SECTION 1056 OF THE STANDARD SPECIFICATIONS FOR ROAD AND BRIDGE CONSTRUCTION SHALL BE PLACED BETWEEN THE FLAT SLAB TOP AND THE BOTTOM OF THE INLET SPECIAL NO. 5 STRUCTURE AND BETWEEN THE STRUCTURE AND LID.

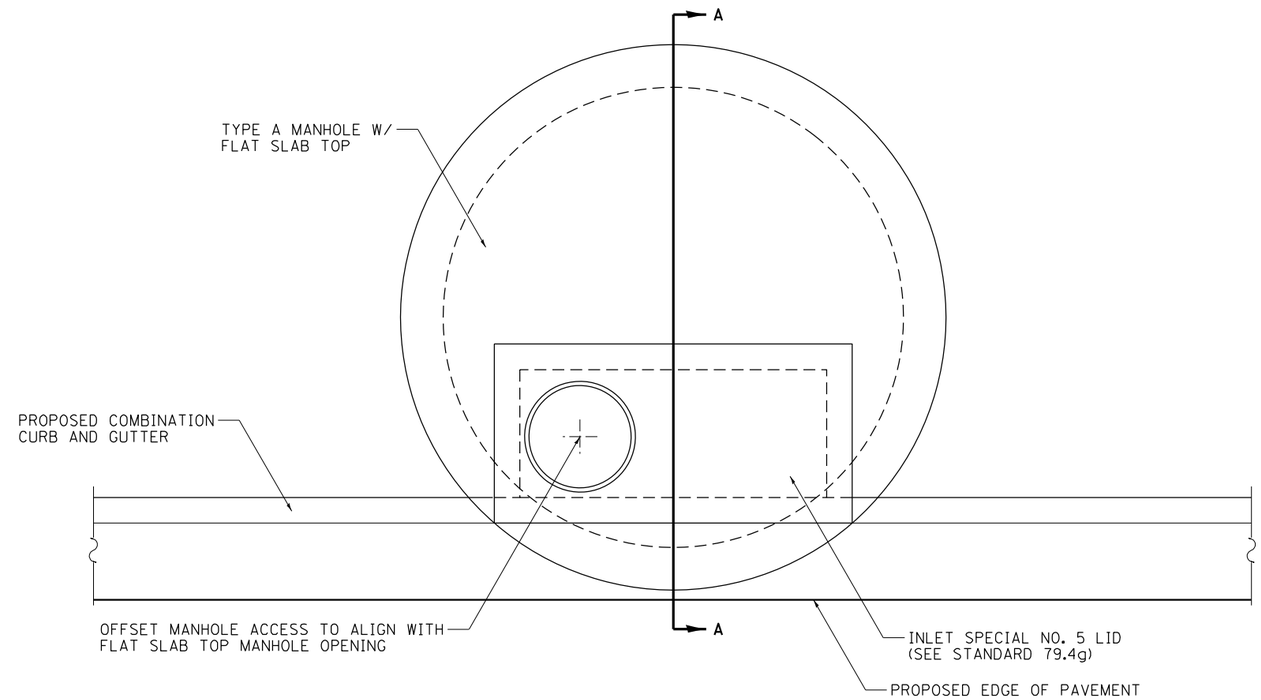

TOP VIEW

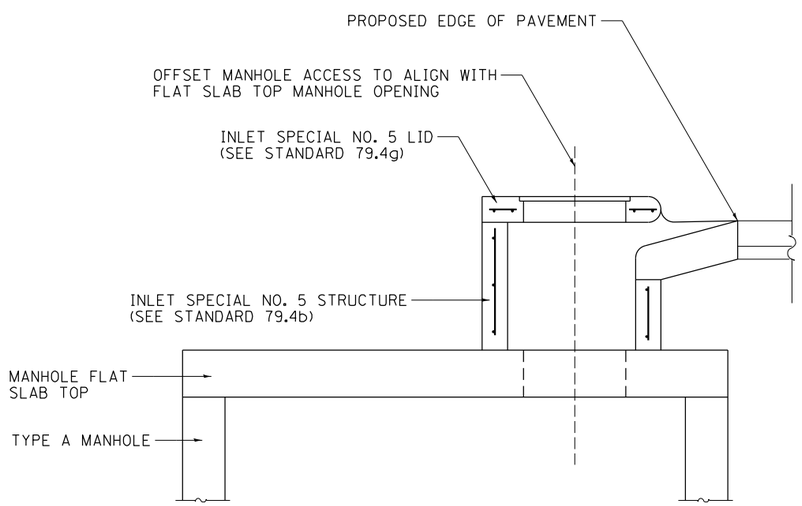

SECTION A–A

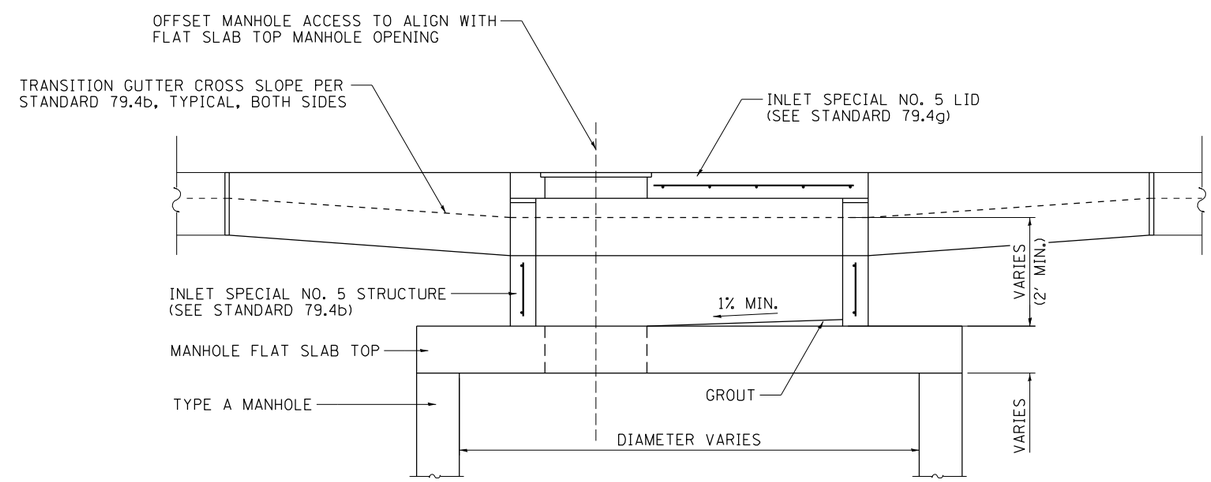

FRONT VIEW

MODEL: Default
FILE NAME: S:\PROJECTS\2010\1095D10_IDOT PTB155Item29 Galena US 20\DESIGN\TRANS\DETAILS.dgn

WILLETT HOFMANN & ASSOCIATES INC ENGINEERING ARCHITECTURE LAND SURVEYING 109 EAST 2ND STREET, DIXON, IL 61021-0362 P: (815) 284-3300 DESIGN FIRM: #184-000916	USER NAME = mslick	DESIGNED - AMF	REVISED -
		DRAWN - TJA	REVISED -
	PLOT SCALE = 480.0000 ' / ft.	CHECKED - GFS	REVISED -
	PLOT DATE = 10/15/2021	DATE - 5/22/20	REVISED -

STATE OF ILLINOIS
DEPARTMENT OF TRANSPORTATION

IL RTE 84 / US 20
STORM SEWER DETAILS

SHEET 1 OF 36 SHEETS

F.A.P. RTE.	SECTION	COUNTY	TOTAL SHEETS	SHEET NO.
301	29R-1	JO DAVIESS	679	371
		CONTRACT NO. 64880		
		ILLINOIS FED. AID PROJECT		

SANITARY MANHOLE DETAILS

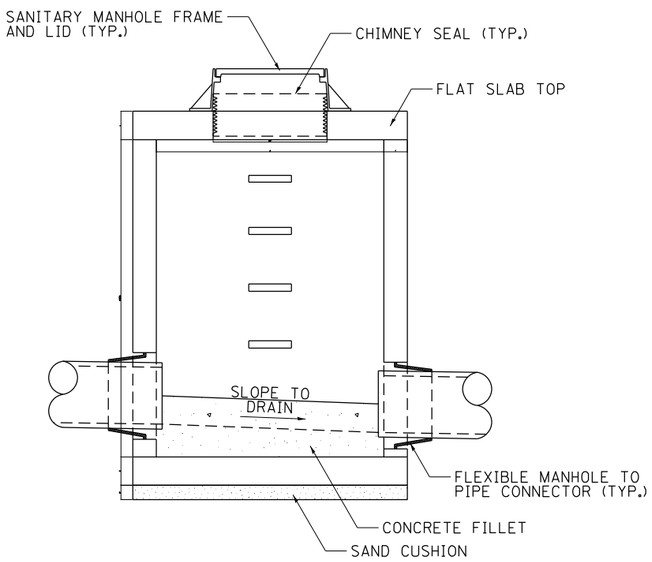

SECTION THRU MANHOLE
(Flat slab top only)

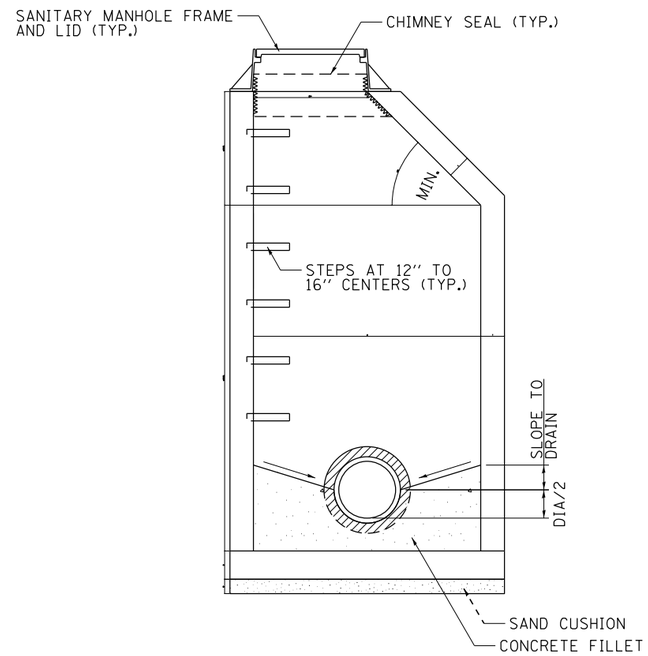

SECTION THRU MANHOLE
(With riser)

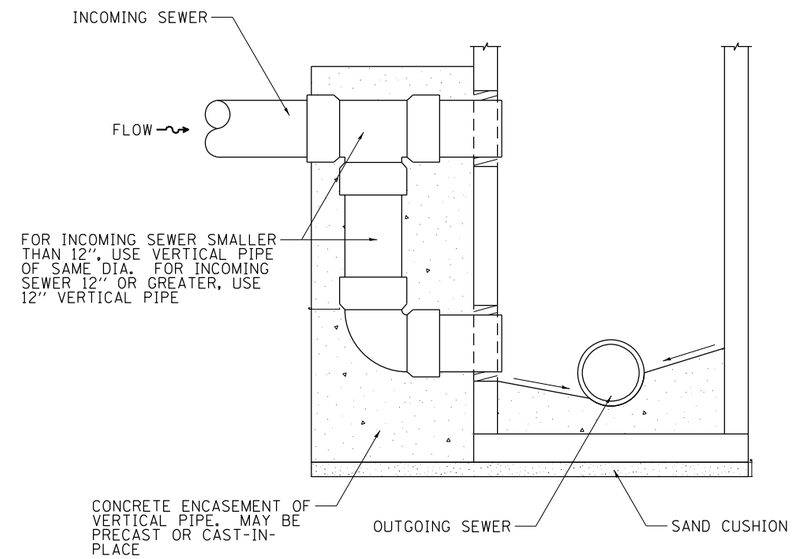

DROP CONNECTION DETAIL
(Section Thru Manhole)

MANHOLE DIMENSION TABLE

MANHOLE DIAMETER (D)	WALL THICKNESS (T)	BASE THICKNESS (B)	FLAT SLAB THICKNESS (T)
4'	5"	6"	6"
5'	6"	8"	8"

GENERAL NOTES

Sanitary manholes shall be precast concrete construction having the dimensions provided in this detail. Manhole reinforcement shall be as shown in Highway Standards 602401 and 602402.

Sanitary manhole joints shall be as shown in Highway Standards 602401 and 602402. All sanitary manhole joints shall be internally sealed with preformed flexible joint sealants and externally sealed with external sealing bands. See Special Provisions. Joint splices shall not be used on sanitary manholes.

See Highway Standard 602701 for details of manhole steps. Only plastic steps shall be used in sanitary manholes.

Concrete fillets shall be precast into the manhole by the manhole manufacturer or shall be cast-in-place by the Contractor using Class SI concrete. Fillets shall be constructed to the spring lines of the various incoming and outgoing sewer pipes and per the plan layouts provided in this Detail.

The manufacturer shall ensure that all precast manhole sections are additionally reinforced where required to resist damage from handling, shipping and installation stresses.

Lifting holes shall be located in the sections as per the manufacturer's recommendations and grouted prior to backfilling.

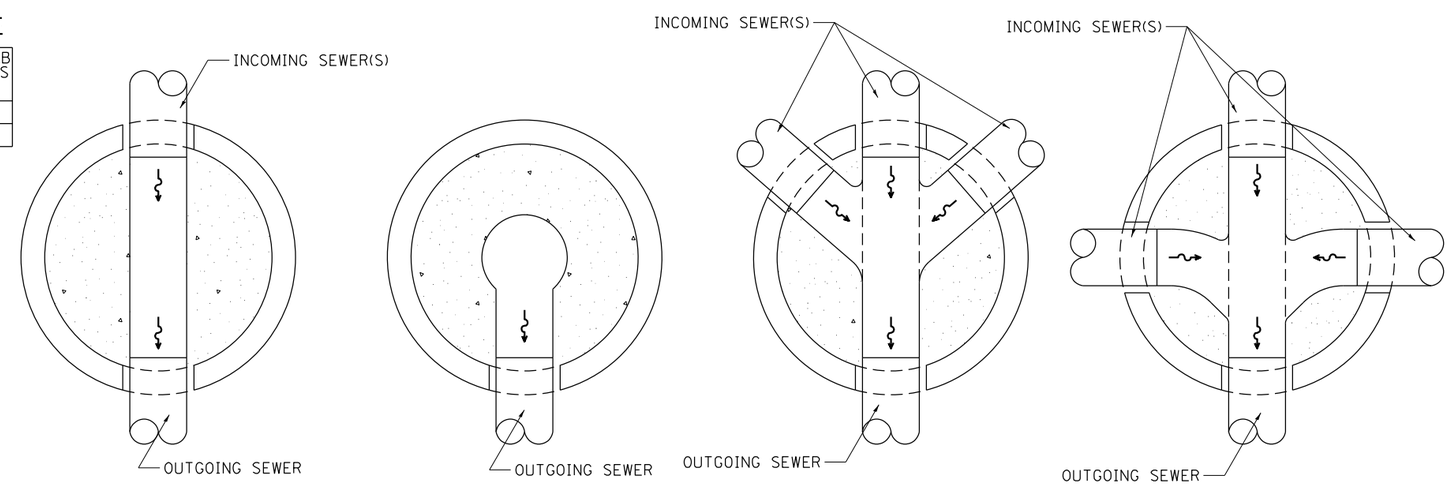

CONCRETE FILLET DETAILS
(Plan view of various layouts)

MODEL: Default
FILE NAME: S:\PROJECTS\2010\1095010_IDOT_PTB153\Item29_Galena_US_20\DESIGN\TRANS\DETAILS.dgn

WILLETT HOFMANN & ASSOCIATES INC ENGINEERING ARCHITECTURE LAND SURVEYING 809 EAST 2ND STREET, DIXON, IL 61021-0367 T. 815-284-3301 DESIGN FIRM: 184-000916	USER NAME = mslick	DESIGNED - AMF	REVISED -	STATE OF ILLINOIS DEPARTMENT OF TRANSPORTATION	IL RTE 84 /US 20 WATER AND SEWER UTILITY DETAILS	F.A.P. RTE. 301	SECTION 29R-1	COUNTY JO DAVIESS
		DRAWN - TJA	REVISED -					TOTAL SHEETS 679
	PLOT SCALE = 480.0000 ' / ft.	CHECKED - GFS	REVISED -					SHEET NO. 372
	PLOT DATE = 10/15/2021	DATE - 5/22/20	REVISED -		SHEET 2 OF 36 SHEETS	CONTRACT NO. 64880		
						ILLINOIS	FED. AID PROJECT	

SANITARY SEWER SERVICE DETAILS

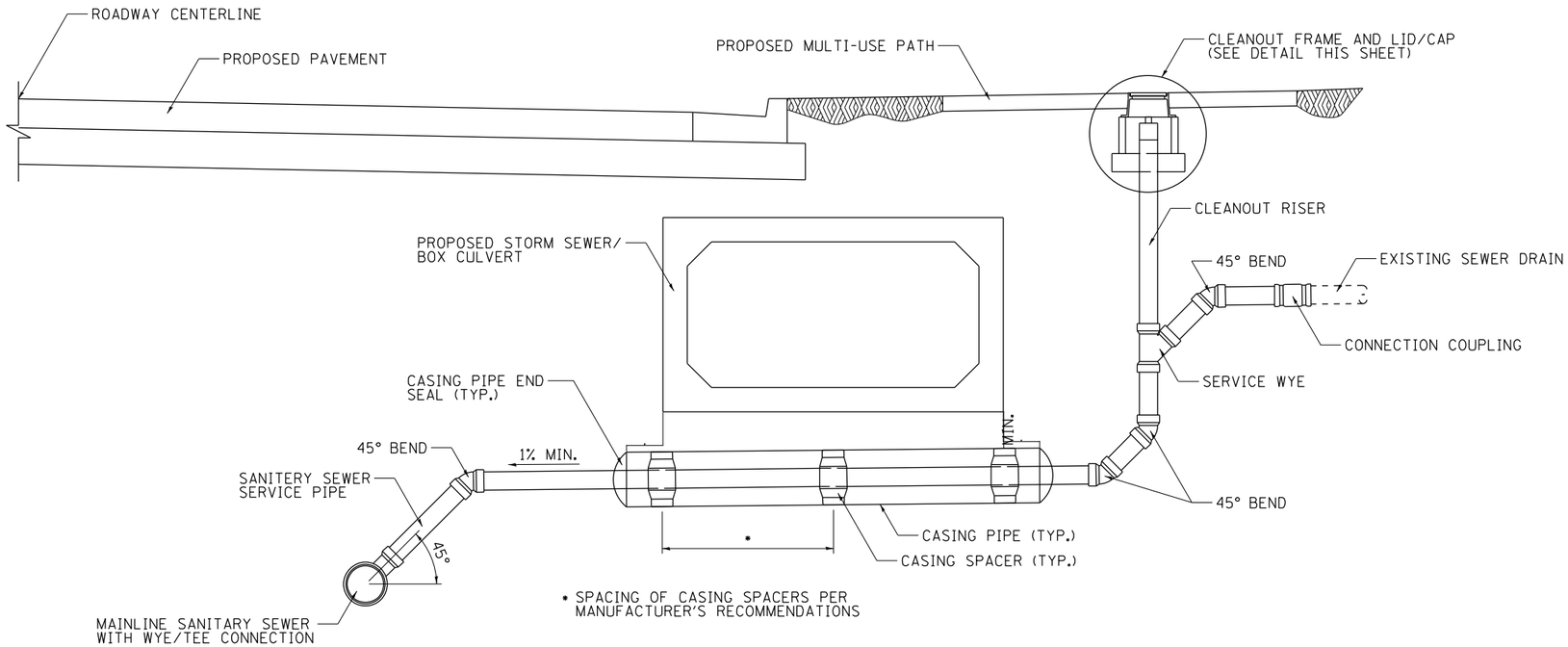

TYPICAL SANITARY SERVICE DETAIL
(Right side of IL 84/US 20 centerline)

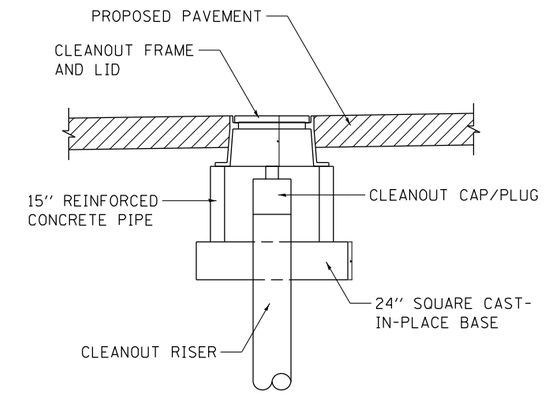

CLEANOUT FRAME & LID DETAIL

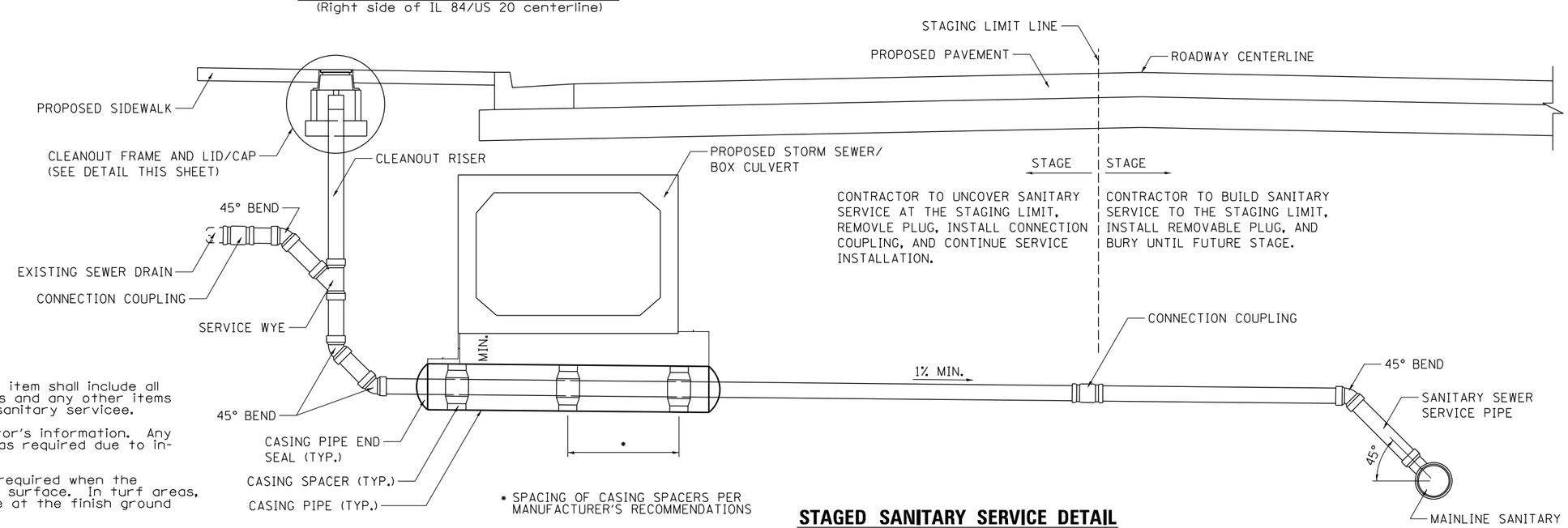

STAGED SANITARY SERVICE DETAIL
(Left side of IL 84/US 20 centerline)

GENERAL NOTES

SANITARY SEWER SERVICE, COMPLETE pay item shall include all appurtenances shown in these details and any other items required for a complete, operating sanitary servicee.

Fittings shown are for the Contractor's information. Any additional fittings shall be provided as required due to in-field conditions.

Cleanout frame and lid shall only be required when the cleanout is to be located in a paved surface. In turf areas, the cleanout cap/plug shall terminate at the finish ground surface.

MODEL: Default
FILE NAME: S:\PROJECTS\2010\1095\10_IDOT_PTB155\Item29 Galena US_20\DESIGN\TRANS\DETAILS.dgn

WILLETT HOFMANN & ASSOCIATES INC ENGINEERING ARCHITECTURE LAND SURVEYING 809 EAST 2ND STREET, DIXON, IL 61021-0367 T: 815-284-3301 DESIGN FIRM: 184-000710	USER NAME = mslick	DESIGNED - AMF	REVISED -
		DRAWN - TJA	REVISED -
	PLOT SCALE = 480.0000 ' / ft.	CHECKED - GFS	REVISED -
	PLOT DATE = 10/15/2021	DATE - 5/22/20	REVISED -

STATE OF ILLINOIS
DEPARTMENT OF TRANSPORTATION

IL RTE 84 /US 20
WATER AND SEWER UTILITY DETAILS

SHEET 3 OF 36 SHEETS

F.A.P. RTE.	SECTION	COUNTY	TOTAL SHEETS	SHEET NO.
301	29R-1	JO DAVIESS	679	373
		CONTRACT NO. 64880		
		ILLINOIS	FED. AID PROJECT	

TYPICAL WATER UTILITY DETAILS

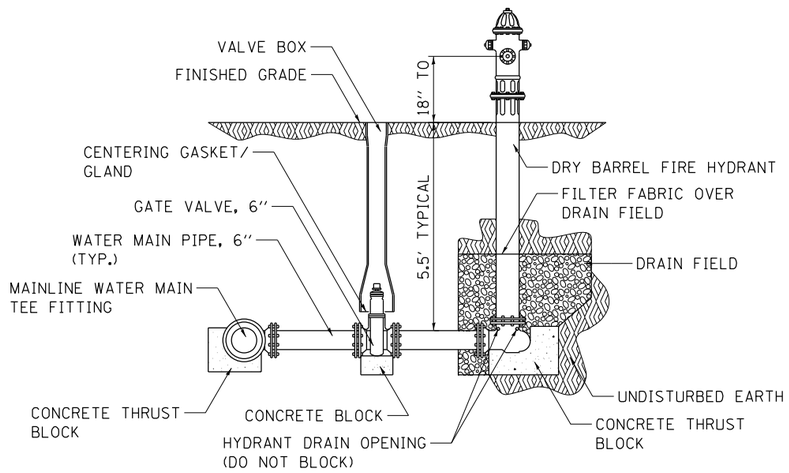

TYPICAL FIRE HYDRANT DETAIL

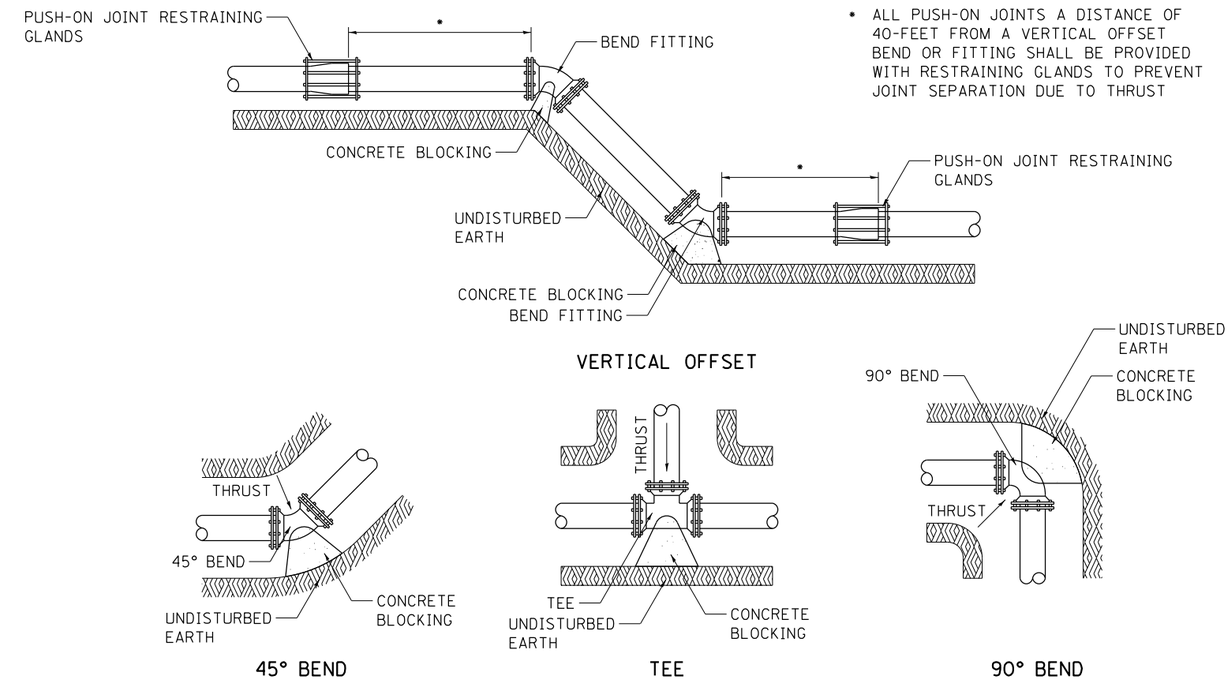

* ALL PUSH-ON JOINTS A DISTANCE OF 40-FEET FROM A VERTICAL OFFSET BEND OR FITTING SHALL BE PROVIDED WITH RESTRAINING GLANDS TO PREVENT JOINT SEPARATION DUE TO THRUST

WATER MAIN FITTING BLOCKING & RESTRAINT

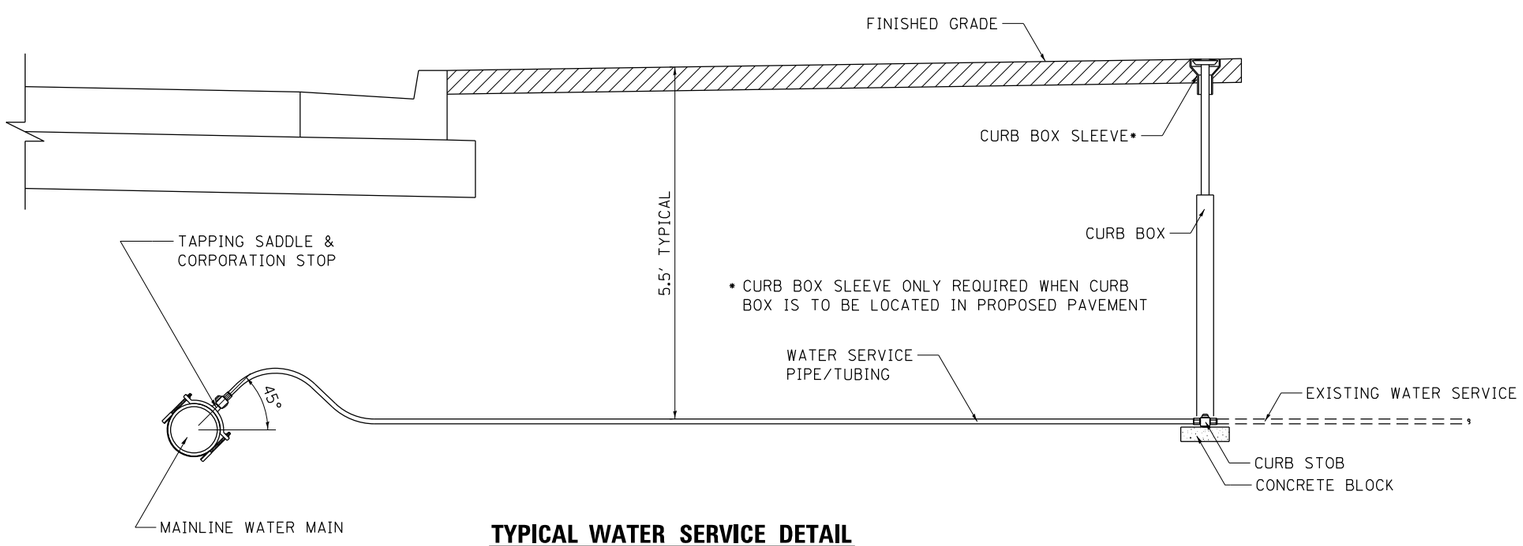

TYPICAL WATER SERVICE DETAIL

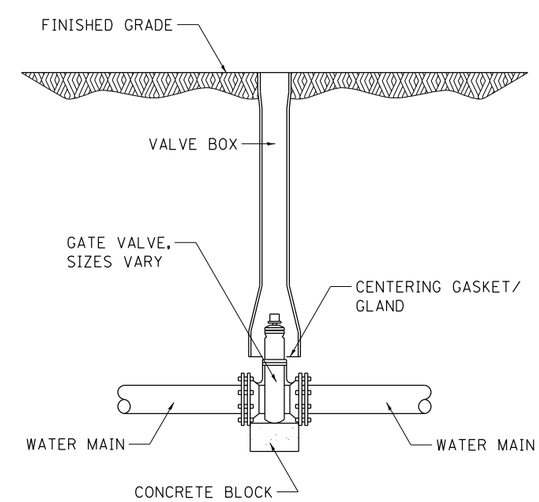

TYPICAL WATER VALVE DETAIL

MODEL: Default
FILE NAME: S:\PROJECTS\2010\109510_IDOT_PTB155\Item29 Galena US_20\DESIGN\TRANS\DETAILS.dgn

WILLETT HOFMANN & ASSOCIATES INC ENGINEERING ARCHITECTURE LAND SURVEYING 809 EAST 2ND STREET, DIXON, IL 61021-0367 T: 815-284-3301 DESIGN FIRM: 184-000110	USER NAME = mslick	DESIGNED - AMF	REVISED -	STATE OF ILLINOIS DEPARTMENT OF TRANSPORTATION	IL RTE 84 /US 20 WATER AND SEWER UTILITY DETAILS	F.A.P. RTE. 301	SECTION 29R-1	COUNTY JO DAVIESS	TOTAL SHEETS 679 / SHEET NO. 374
		DRAWN - TJA	REVISED -					CONTRACT NO. 64880	
	PLOT SCALE = 480.0000 ' / ft.	CHECKED - GFS	REVISED -						
	PLOT DATE = 10/15/2021	DATE - 5/22/20	REVISED -		SHEET 4 OF 36 SHEETS		ILLINOIS	FED. AID PROJECT	

WATER SERVICE DETAILS

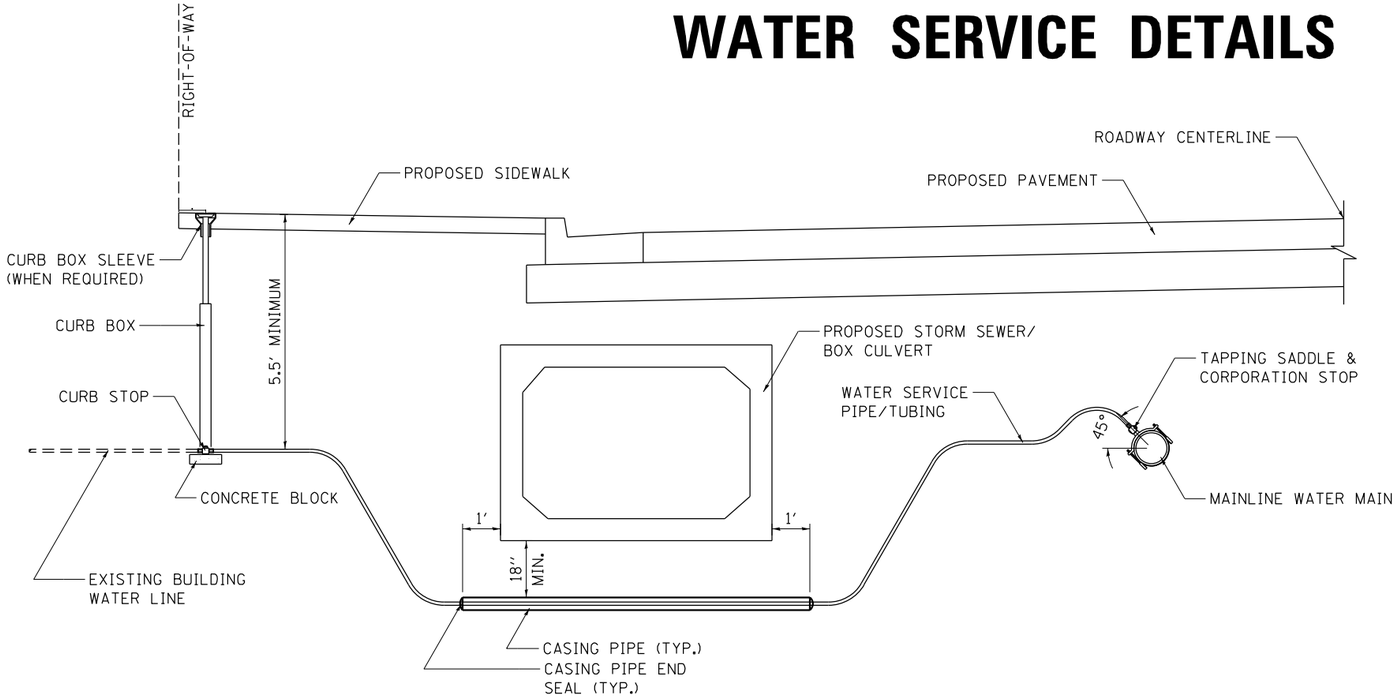

TYPICAL WATER SERVICE DETAIL
(Left side of IL 84/US 20 centerline)

GENERAL NOTES

WATER SERVICE, COMPLETE pay item shall include all appurtenances shown in these details and any other items required for a complete, operating water service.

Fittings shown are for the Contractor's information. Any additional fittings shall be provided as required due to in-field conditions.

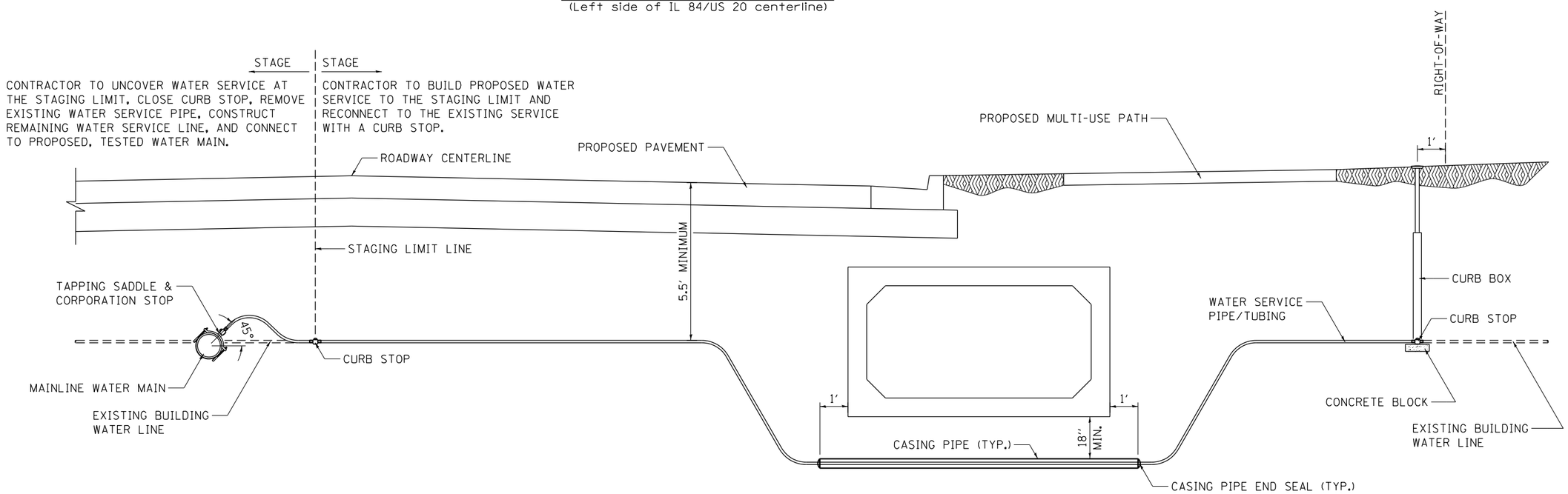

STAGED WATER SERVICE DETAIL
(Right side of IL 84/US 20 centerline)

MODEL: Default
FILE NAME: S:\PROJECTS\2010\1095D10_IDOT_PTB155Item29_Galena_US_20\DESIGN\TRANS\DETAILS.dgn

WILLETT HOFMANN & ASSOCIATES INC ENGINEERING ARCHITECTURE LAND SURVEYING 801 EAST 2ND STREET, DIXON, IL 61021-0362 P: (815) 284-3300 DESIGN FIRM: #184-000916	USER NAME = mslick	DESIGNED - AMF	REVISED -	STATE OF ILLINOIS DEPARTMENT OF TRANSPORTATION	IL RTE 84 /US 20 WATER AND SEWER UTILITY DETAILS	F.A.P. RTE. 301	SECTION 29R-1	COUNTY JO DAVIESS	TOTAL SHEETS 679 / SHEET NO. 375
		DRAWN - TJA	REVISED -					CONTRACT NO. 64880	
	PLOT SCALE = 480.0000 ' / ft.	CHECKED - GFS	REVISED -						
	PLOT DATE = 10/15/2021	DATE - 5/22/20	REVISED -		SHEET 5 OF 36 SHEETS		ILLINOIS	FED. AID PROJECT	

FIRE HYDRANT AT STATION 1203 + 67, RT DETAIL

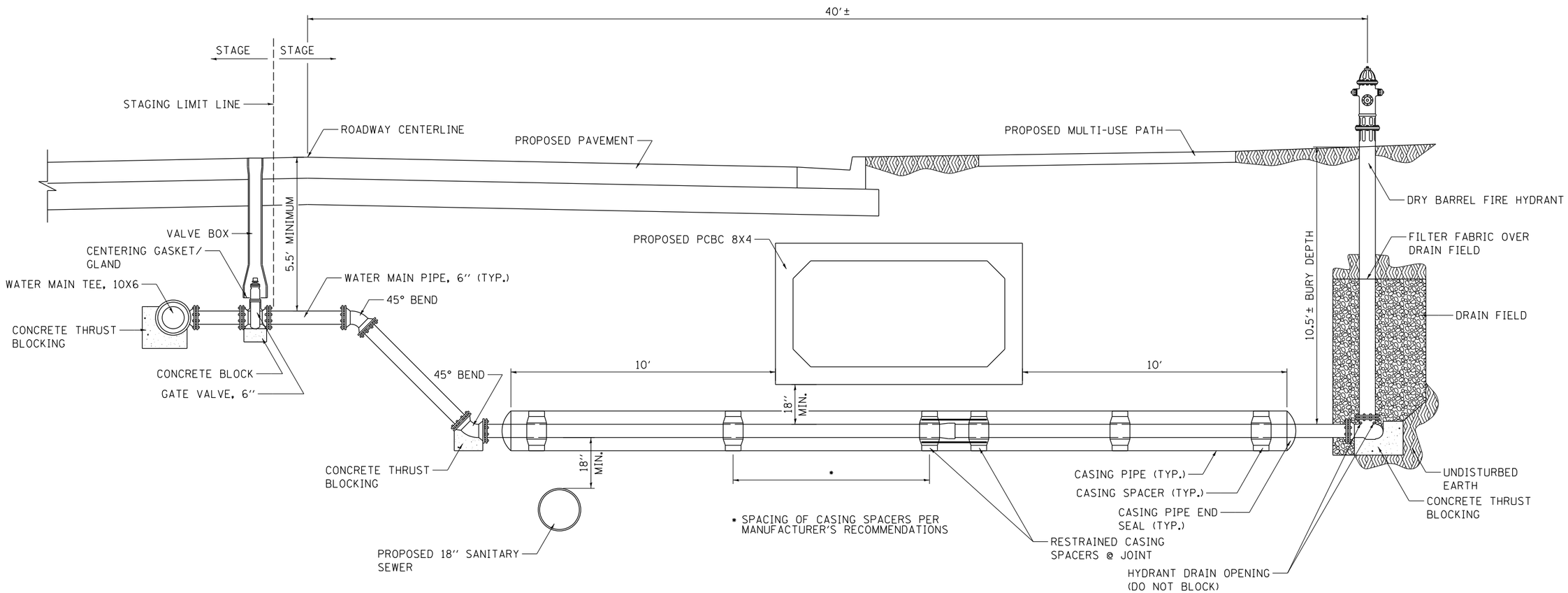

GENERAL NOTES

FIRE HYDRANT pay item shall include all necessary extension pieces and appurtenances to achieve the 10.5' bury depth of this fire hydrant as shown.

Fittings shown are for the Contractor's information. Any additional fittings shall be provided as required due to in-field conditions.

Refer to the WATER MAIN FITTING BLOCKING & RESTRAINT detail provided in the plans for additional water main blocking and restraint requirements for the vertical offset shown in this detail.

Due to the increased barrel length of the proposed hydrant, the hydrant drain field size shall be increased accordingly to allow for complete barrel draining upon shut off.

STAGED CONSTRUCTION NOTES

As part of the Stage _ construction, the proposed hydrant, hydrant lead, casing pipe, casing spacers, and necessary fittings shall be constructed as shown to the Staging Limit Line. At the Staging Limit Line, the Contractor shall leave the hydrant lead as a plain end pipe and shall insert a removable plug. The hydrant shall be covered with a plastic bag for protection and to discourage any attempt at use until construction completion.

As part of the Stage _ construction, the Contractor shall uncover the hydrant lead at the Staging Limit Line and shall remove the plug. The Contractor shall then install the hydrant isolation valve on the plain end of the hydrant lead and shall complete the connection to the main line water main. The hydrant isolation valve shall be closed until the water main has passed the requisite testing at which time the bag on the hydrant may be removed and the hydrant lead flushed.

PRESSURE REDUCING VALVE VAULT DETAIL

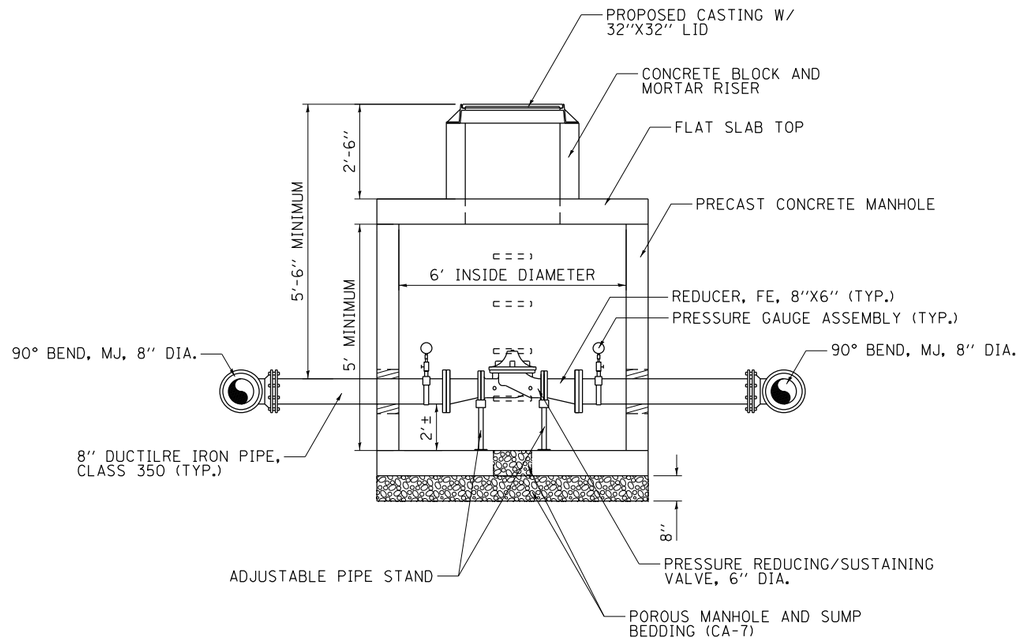

SECTION VIEW

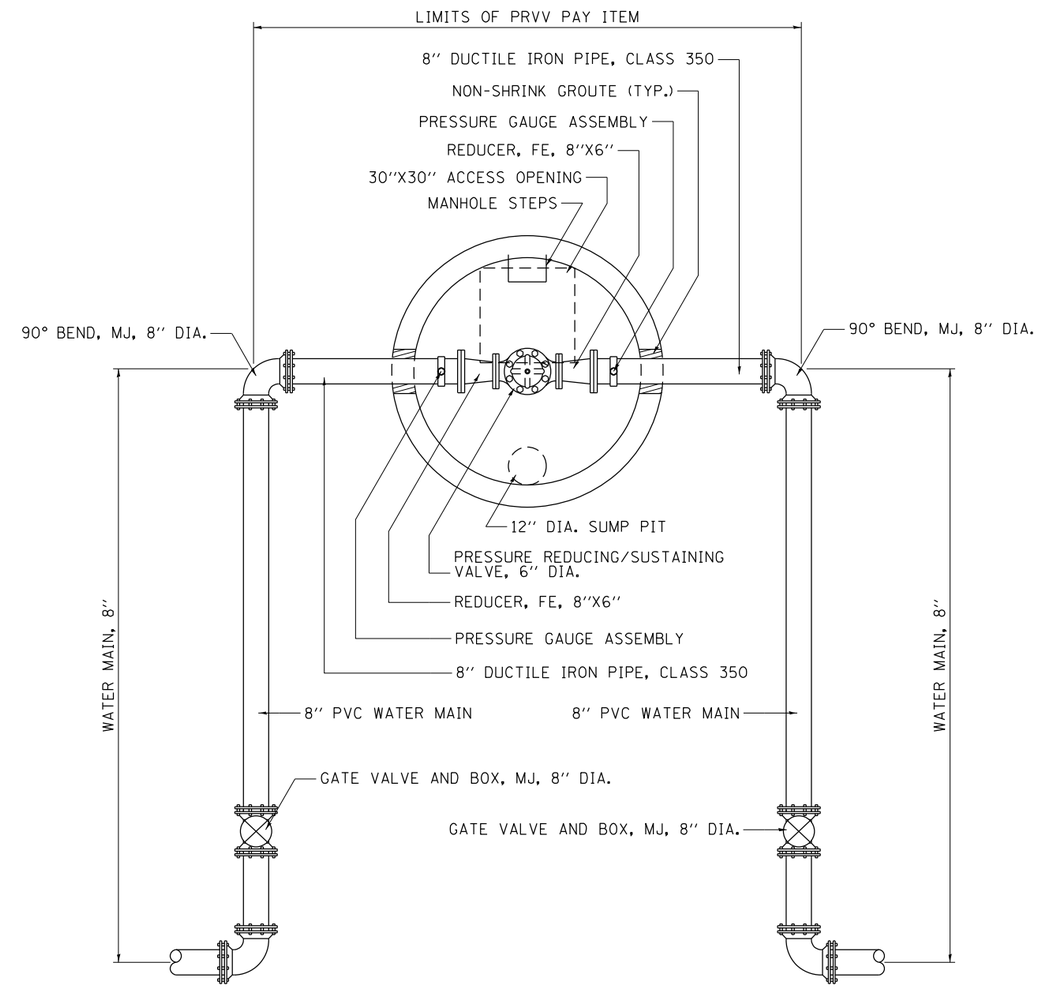

PLAN VIEW

GENERAL NOTES

PRESSURE REDUCING VALVE VAULT pay item shall include all work shown to the limit identified on this detail. 8" water main connections upstream and downstream of vault shall be paid for with the WATER MAINS, 8" pay item.

Fittings shown are for the Contractor's information. Any additional fittings shall be provided as required due to in-field conditions.

Refer to the Special Provisions for additional product requirements for the items shown.

Pressure gauge assembly shall consist of a tapping saddle with 3/4" FNPT connection, 3/4" brass nipple, 3/4" ball valve with tee- operator, 3/4" x 1/4" brass bushing, 1/4" brass nipple, 1/4" gauge snuffer, and pressure gauge. Refer to the Special Provisions for additional, specific product requirements.

The vault isolation valves will not be opened until the installation of the pressure reducing/sustaining valve has been inspected and tested by a manufacturer certified technician. Valves will only be opened under the direct superivision of said technician, no exceptions. The City of Galena Water Department and Engineer shall be present during the testing and placing into service of the valve. The factory technician shall provide training on the operation and maintenance of the pressure reducing/sustaining valve at the time of certification.

PRE-STAGING PAVEMENT PATCHING

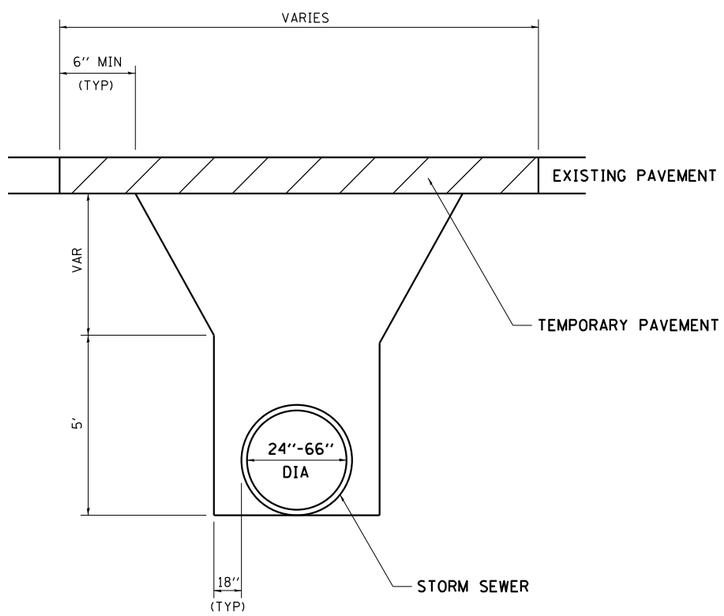

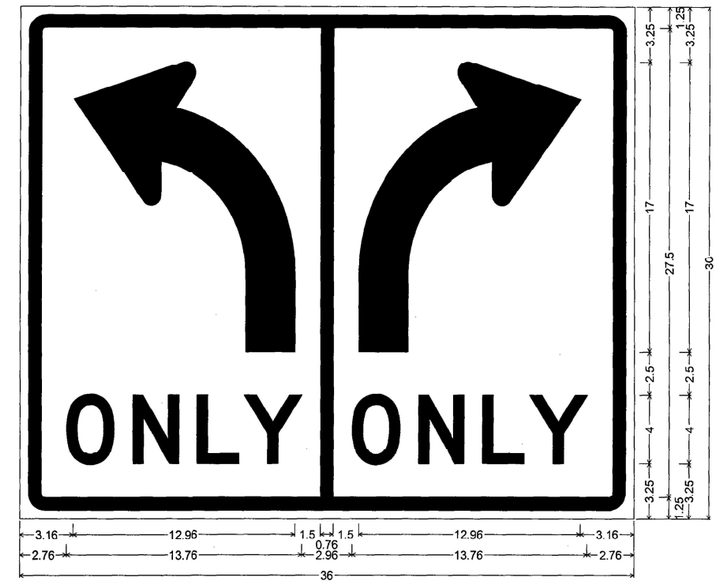

1.50" Radius, 0.75" Border, 0.50" Indent, Black on White;
"ONLY" D 115% spacing; "ONLY" D 115% spacing;
Table of letter and object lefts.

3.16	17.62	19.88

O	N	L	Y	O	N	L	Y
2.76	6.65	10.42	13.14	19.48	23.37	27.14	29.86

TEMPORARY TRAFFIC CONTROL SIGN
MAIN STREET

MODEL: Default
FILE NAME: S:\PROJECTS\2010\1095010_IDOT_PTB115\Item29_Galena_US_20\DESIGN\TRANS\DETAILS.dgn

WILLETT HOFMANN & ASSOCIATES INC
ENGINEERING ARCHITECTURE LAND SURVEYING
809 EAST 2ND STREET, DIXON, IL 61021-0367
T. 815-284-3301 DESIGN FIRM: #184-000716

USER NAME = mslick	DESIGNED - AMF	REVISED -	
	DRAWN - TJA	REVISED -	
PLOT SCALE = 480.0000 ' / ft.	CHECKED - GFS	REVISED -	
PLOT DATE = 10/15/2021	DATE - 5/22/20	REVISED -	

STATE OF ILLINOIS
DEPARTMENT OF TRANSPORTATION

IL RTE 84 / US 20
STAGE CONSTRUCTION DETAILS

SHEET 8 OF 36 SHEETS

F.A.P. RTE.	SECTION	COUNTY	TOTAL SHEETS	SHEET NO.
301	29R-1	JO DAVIESS	679	378
		CONTRACT NO. 64880		
		ILLINOIS FED. AID PROJECT		

RIPRAP AT END SECTIONS

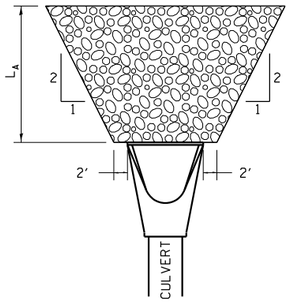

FLARED END SECTION

L_A = APRON LENGTH (ft)

IF THE CULVERT OUTLETS INTO A DEFINED CHANNEL, RIPRAP BANK TO BANK FOR LENGTH (L_A).

STANDARD END SECTION:
542001 (PIPE), 542011 (ELLIPTICAL)
DISTRICT STANDARD 10.1 (BOX).

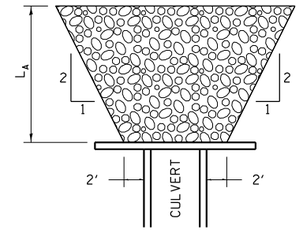

CULVERT WITH HEADWALL

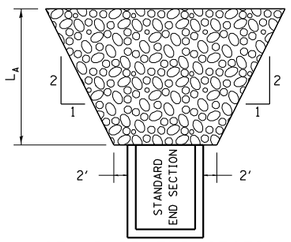

STANDARD END SECTION

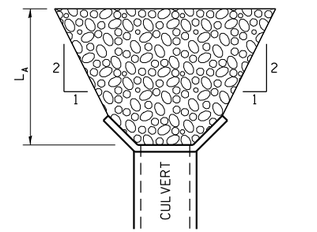

CULVERT WITH WING WALLS

REVISED - 7-13-16
REVISED - 11-12-14
REVISED - 2-10-14

RIPRAP AT END SECTIONS 19.4

PAVEMENT BREAKING DETAIL

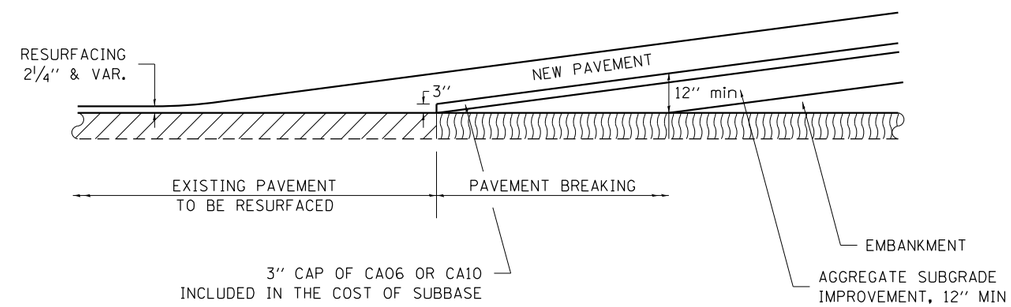

REVISED - 3-19-13

PAVEMENT BREAKING DETAIL 24.4

THRUST BLOCK DETAILS

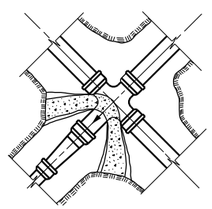

REDUCING CROSS

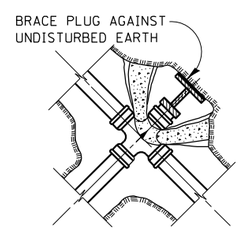

PLUGGED CROSS

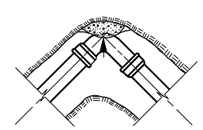

90° ELBOW

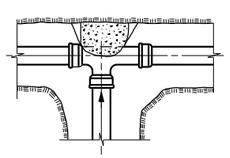

TEE

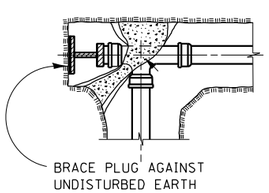

PLUGGED TEE

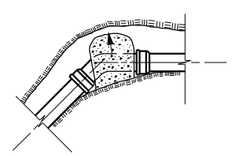

VERTICAL BEND

NOTES:
ALL BLOCKS TO BEAR AGAINST UNDISTURBED EARTH.
ARROWS INDICATE DIRECTION OF THRUST.
ALL BLOCKS TO BE CLASS SI CONCRETE.
ALL FITTINGS SHOWN IN PLAN EXCEPT VERTICAL BEND.

ALL DIMENSIONS ARE IN INCHES UNLESS OTHERWISE NOTED.

REVISED - 10-03-11

THRUST BLOCK DETAILS 34.4

SIDEWALK AND DRIVEWAY PAVEMENT PAY AREAS

PAY FOR AS

- SIDEWALK REMOVAL
- DRIVEWAY PAVEMENT REMOVAL
- PCC SIDEWALK 5
- PCC DRIVEWAY PAVEMENT 7

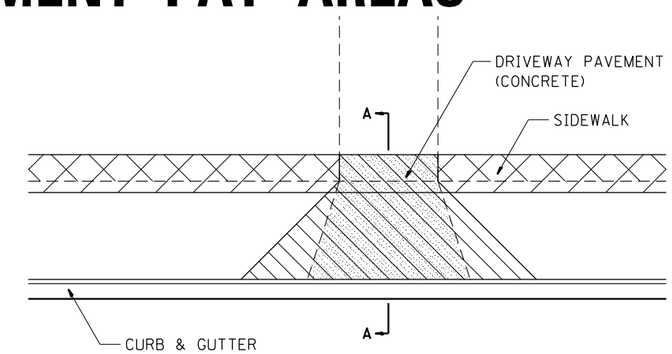

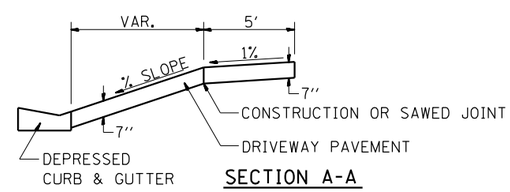

SECTION A-A

FOR DETAILS ON DIMENSIONS AND GRADES, SEE DISTRICT STANDARD 25.1 OR PLANS.

ALL DIMENSIONS ARE IN INCHES UNLESS OTHERWISE NOTED.

REVISED - 6-27-14
10-03-11

SIDEWALK AND DRIVEWAY PAVEMENT PAY AREAS 35.4

CONCRETE GUTTER, TYPE A (SPECIAL)

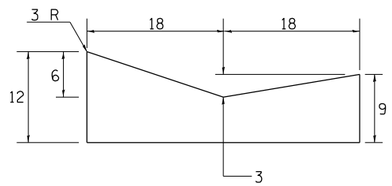

NOTES:

THIS WORK SHALL BE DONE IN ACCORDANCE WITH THIS DETAIL AND STANDARD 606101
THIS WORK SHALL BE PAID FOR AT THE CONTRACT UNIT PRICE PER FOOT FOR
CONCRETE GUTTER, TYPE A (SPECIAL).

ALL DIMENSIONS ARE IN INCHES UNLESS
OTHERWISE NOTED.

REVISED - 10-03-11

CONCRETE GUTTER, TYPE A (SPECIAL) 36.4

TYPICAL BENCHING ON EXISTING EMBANKMENT

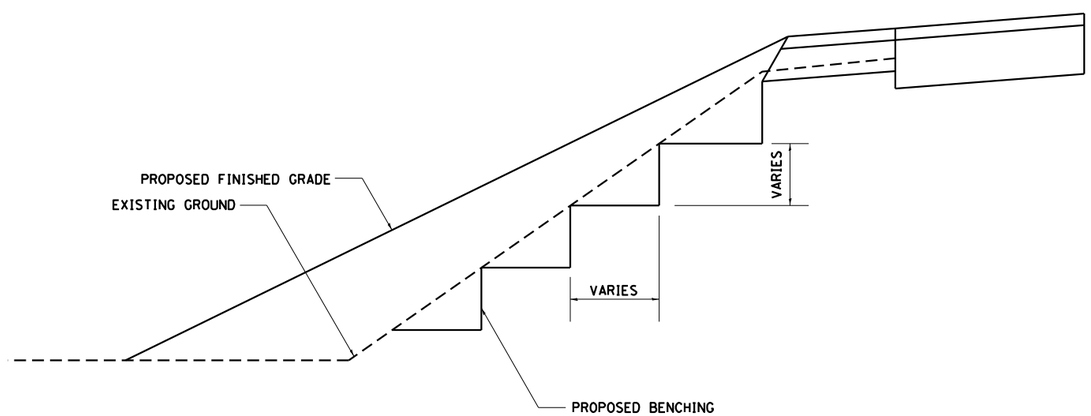

REVISED - 2-22-06

TYPICAL BENCHING ON EXISTING EMBANKMENT 50.4

MODEL: Default
FILE NAME: S:\PROJECTS\2010\1095D10_IDOT PTB155Item29 Galena US 20\DESIGN\TRANSDETAILS.dgn

WILLETT HOFMANN & ASSOCIATES INC
ENGINEERING ARCHITECTURE LAND SURVEYING
809 EAST 2ND STREET, DIXON, IL 61021-0367
P 815-284-2001 DESIGN FIRM: #184-000918

USER NAME = mslick	DESIGNED - AMF	REVISED -	
	DRAWN - TJA	REVISED -	
PLOT SCALE = 480.0000 ' / ft.	CHECKED - GFS	REVISED -	
PLOT DATE = 10/15/2021	DATE - 5/22/20	REVISED -	

STATE OF ILLINOIS
DEPARTMENT OF TRANSPORTATION

IL RTE 84 / US 20
REGION 2 / DISTRICT 2 STANDARDS

SHEET 10 OF 36 SHEETS

F.A.P. RTE.	SECTION	COUNTY	TOTAL SHEETS	SHEET NO.
301	29R-1	JO DAVIESS	679	380
		CONTRACT NO. 64880		
		ILLINOIS	FED. AID PROJECT	

DETAIL OF CONCRETE STEPS

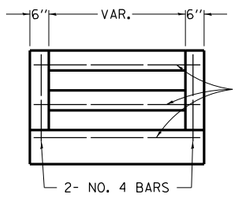

END ELEVATION

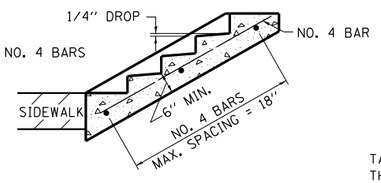

SECTION A-A

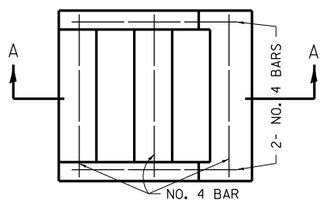

PLAN

TABLE OF TREADS & RISERS

SLOPE	TREAD	RISER
1:2	12"	6"
1:3	15"	5"
1:4	17"	4 1/4"

WHERE SLOPES FALL BETWEEN THOSE SHOWN IN THE TABLE ABOVE, THE STAIR RAIL SHOULD FIT THE SLOPE AND THE TREAD IN INCHES × THE RISER IN INCHES SHOULD BE BETWEEN 72 AND 78.

EXAMPLE:

FOR A 1:4 SLOPE USE y = RISER HEIGHT $4y^2 = 75''$.
SOLVING $y^2 = \frac{75''}{4}$, y= 4.3" (USE 4 1/4" FOR CONVENIENCE.)

TREAD WOULD THEN BE 4 1/4" × 4 = 17"

COST OF REINFORCEMENT BARS SHALL BE PAID FOR AT THE CONTRACT UNIT PRICE PER LBS FOR REINFORCEMENT BARS.

CLASS SI CONCRETE SHALL BE USED THROUGHTOUT, WHICH SHALL BE PAID FOR AT THE CONTRACT UNIT PRICE PER CUBIC YARD FOR CONCRETE STEPS

ALL DIMENSIONS ARE IN INCHES UNLESS OTHERWISE NOTED.

REVISED - 8-27-13
REVISED - 10-03-11

DETAIL OF CONCRETE STEPS 71.4

INLETS, SPECIAL, NO. 3

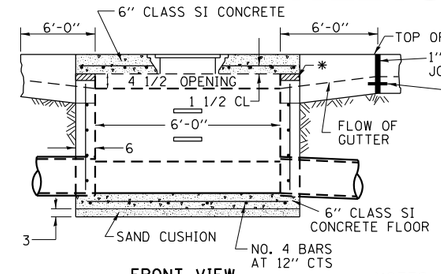

FRONT VIEW

STEPS AT 12 TO 16 CTS.

* THE WALL ADJUSTMENTS SHALL BE MADE WITH CONCRETE BUILDING BRICK OR CLASS SI CONCRETE.

THE HEIGHT OF THE BOX MAY BE CONSTRUCTED 6" SHORT TO ALLOW FOR FIELD ADJUSTMENTS.

ALL DIMENSIONS ARE IN INCHES UNLESS OTHERWISE NOTED.

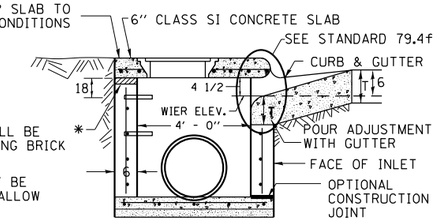

SEC. A-A

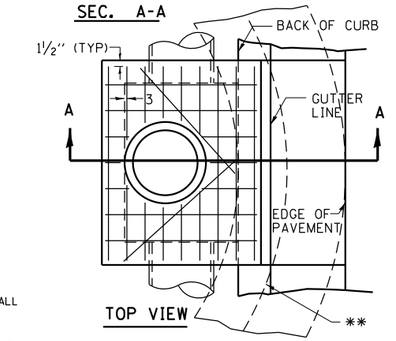

TOP VIEW

** WHEN INLET IS CONSTRUCTED IN RETURN, THE TOP OF SLAB SHALL CONFORM TO THE RADIUS OF THE RETURN.

NOTES

SEE STANDARD 602701 FOR DETAILS OF STEPS.

1" PREFORMED EXPANSION JOINTS AS SHOWN SHALL BE PROVIDED ON EACH SIDE OF INLET.

CLASS SI CONCRETE OR PRECAST CONCRETE SHALL BE USED TROUGHOUT.

THE SIDE WALLS MAY BE BUILT AS PRECAST SEGMENTAL SECTIONS.

REINFORCEMENT FOR INLETS, SPECIAL, NO. 3 SHALL BE ACCORDING TO DISTRICT STANDARD 79.4g

STEPS SHALL BE OMITTED WHEN DEPTH OF INLET IS LESS THAN 5 FOOT

THE INLET SHALL BE CAST IN PLACE OR PRECAST.

EXCEPT AS NOTED HEREON INLETS, SPECIAL, NO. 3 SHALL BE CONSTRUCTED IN ACCORDANCE WITH SECTION 602 OF THE STANDARD SPECIFICATIONS.

THE CONTRACT UNIT PRICE EACH FOR INLET SPECIAL NO. 3 SHALL INCLUDE THE COST OF FURNISHING AND INSTALLING THE FRAME, LID, REINFORCEMENT BARS, FLOOR AND TOP SLABS, CAST IRON STEPS (IF USED).

THE CURB AND GUTTER WILL BE PAID FOR SEPARATELY AND WILL BE MEASURED THROUGH THE INLET.

THE CURB AND GUTTER ADJACENT TO AND 6 FOOT ON EITHER SIDE OF THE INLET SHALL BE CONSTRUCTED AS SHOWN WITH NO ADDITIONAL COMPENSATION FOR THE TRANSITION.

ALL PIPE UNDERDRAIN CONNECTIONS WHEN SPECIFIED SHALL BE DONE IN ACCORDANCE WITH ART. 601 OF THE STANDARD SPECIFICATIONS. THIS WORK WILL BE PAID FOR AT THE CONTRACT UNIT PRICE PER (FOOT) FOR PIPE UNDERDRAINS, TYPE 2 OR PIPE UNDERDRAINS (SPECIAL) OF THE DIAMETER SPECIFIED WHICH PRICE SHALL INCLUDE THE CA7 OR CA16 AND THE CONNECTION TO THE INLET.

LIGHT WEIGHT MANHOLE CASTING

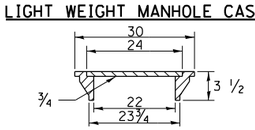

TOTAL WEIGHT 160 LBS.

REVISED - 1-05-16
REVISED - 8-27-13
REVISED - 10-03-11

INLETS, SPECIAL, NO. 3 79.4

INLETS, SPECIAL, NO. 5

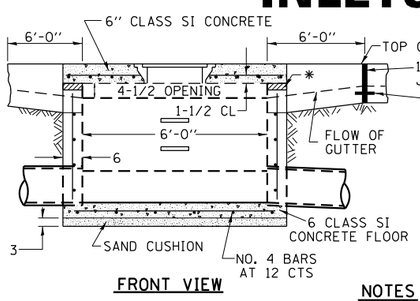

FRONT VIEW

STEPS AT 12 TO 16 CTS.

* THE WALL ADJUSTMENTS SHALL BE MADE WITH CONCRETE BUILDING BRICK OR CLASS SI CONCRETE.

THE HEIGHT OF THE BOX MAY BE CONSTRUCTED 6 SHORT TO ALLOW FOR FIELD ADJUSTMENTS.

ALL DIMENSIONS ARE IN INCHES UNLESS OTHERWISE NOTED.

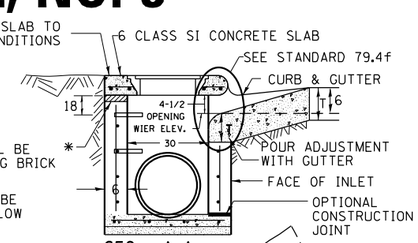

SEC. A-A

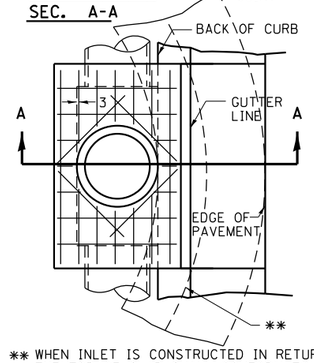

** WHEN INLET IS CONSTRUCTED IN RETURN, THE TOP OF SLAB SHALL CONFORM TO THE RADIUS OF THE RETURN.

NOTES

SEE STANDARD 602701 FOR DETAILS OF STEPS.

1" PREFORMED EXPANSION JOINTS AS SHOWN SHALL BE PROVIDED ON EACH SIDE OF INLET.

CLASS SI CONCRETE OR PRECAST CONCRETE SHALL BE USED TROUGHOUT.

THE SIDE WALLS MAY BE BUILT AS PRECAST SEGMENTAL SECTIONS.

REINFORCEMENT FOR INLETS, SPECIAL, NO. 5 SHALL BE ACCORDING TO DISTRICT STANDARD 79.4g

STEPS SHALL BE OMITTED WHEN DEPTH OF INLET IS LESS THAN 5 FOOT

THE INLET SHALL BE CAST IN PLACE OR PRECAST.

EXCEPT AS NOTED HEREON INLETS, SPECIAL, NO. 5 SHALL BE CONSTRUCTED IN ACCORDANCE WITH SECTION 602 OF THE STANDARD SPECIFICATIONS.

THE CONTRACT UNIT PRICE EACH FOR INLET SPECIAL NO. 5 SHALL INCLUDE THE COST OF FURNISHING AND INSTALLING THE FRAME, LID, REINFORCEMENT BARS, FLOOR AND TOP SLABS, CAST IRON STEPS (IF USED).

THE CURB AND GUTTER WILL BE PAID FOR SEPARATELY AND WILL BE MEASURED THROUGH THE INLET.

THE CURB AND GUTTER ADJACENT TO AND 6 FOOT ON EITHER SIDE OF THE INLET SHALL BE CONSTRUCTED AS SHOWN WITH NO ADDITIONAL COMPENSATION FOR THE TRANSITION.

ALL PIPE UNDERDRAIN CONNECTIONS WHEN SPECIFIED SHALL BE DONE IN ACCORDANCE WITH ART. 601 OF THE STANDARD SPECIFICATIONS. THIS WORK WILL BE PAID FOR AT THE CONTRACT UNIT PRICE PER (FOOT) FOR PIPE UNDERDRAINS, TYPE 2 OR PIPE UNDERDRAINS (SPECIAL) OF THE DIAMETER SPECIFIED WHICH PRICE SHALL INCLUDE THE CA7 OR CA16 AND THE CONNECTION TO THE INLET.

LIGHT WEIGHT MANHOLE CASTING

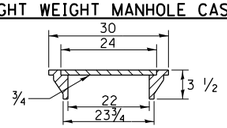

TOTAL WEIGHT 160 LBS.

REVISED - 1-05-16
REVISED - 8-27-13
REVISED - 10-04-11

INLETS, SPECIAL, NO. 5 79.4b

INLETS, SPECIAL, NO. 7

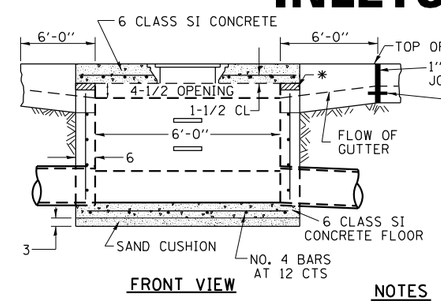

FRONT VIEW

STEPS AT 12 TO 16 CTS.

* THE WALL ADJUSTMENTS SHALL BE MADE WITH CONCRETE BUILDING BRICK OR CLASS SI CONCRETE.

THE HEIGHT OF THE BOX MAY BE CONSTRUCTED 6 SHORT TO ALLOW FOR FIELD ADJUSTMENTS.

ALL DIMENSIONS ARE IN INCHES UNLESS OTHERWISE NOTED.

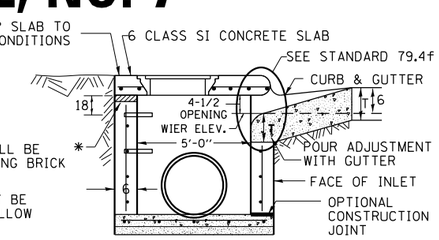

SEC. A-A

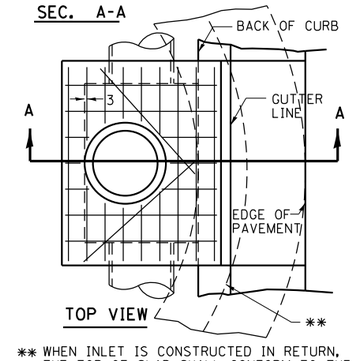

TOP VIEW

** WHEN INLET IS CONSTRUCTED IN RETURN, THE TOP OF SLAB SHALL CONFORM TO THE RADIUS OF THE RETURN.

NOTES

SEE STANDARD 602701 FOR DETAILS OF STEPS.

1" PREFORMED EXPANSION JOINTS AS SHOWN SHALL BE PROVIDED ON EACH SIDE OF INLET.

CLASS SI CONCRETE OR PRECAST CONCRETE SHALL BE USED TROUGHOUT.

THE SIDE WALLS MAY BE BUILT AS PRECAST SEGMENTAL SECTIONS.

REINFORCEMENT FOR INLETS, SPECIAL, NO. 7 SHALL BE ACCORDING TO DISTRICT STANDARD 79.4h

STEPS SHALL BE OMITTED WHEN DEPTH OF INLET IS LESS THAN 5 FOOT

THE INLET SHALL BE CAST IN PLACE OR PRECAST.

EXCEPT AS NOTED HEREON INLETS, SPECIAL, NO. 7 SHALL BE CONSTRUCTED IN ACCORDANCE WITH SECTION 602 OF THE STANDARD SPECIFICATIONS.

THE CONTRACT UNIT PRICE EACH FOR INLET SPECIAL NO. 7 SHALL INCLUDE THE COST OF FURNISHING AND INSTALLING THE FRAME, LID, REINFORCEMENT BARS, FLOOR AND TOP SLABS, CAST IRON STEPS (IF USED).

THE CURB AND GUTTER WILL BE PAID FOR SEPARATELY AND WILL BE MEASURED THROUGH THE INLET.

THE CURB AND GUTTER ADJACENT TO AND 6 FOOT ON EITHER SIDE OF THE INLET SHALL BE CONSTRUCTED AS SHOWN WITH NO ADDITIONAL COMPENSATION FOR THE TRANSITION.

ALL PIPE UNDERDRAIN CONNECTIONS WHEN SPECIFIED SHALL BE DONE IN ACCORDANCE WITH ART. 601 OF THE STANDARD SPECIFICATIONS. THIS WORK WILL BE PAID FOR AT THE CONTRACT UNIT PRICE PER (FOOT) FOR PIPE UNDERDRAINS, TYPE 2 OR PIPE UNDERDRAINS (SPECIAL) OF THE DIAMETER SPECIFIED WHICH PRICE SHALL INCLUDE THE CA7 OR CA16 AND THE CONNECTION TO THE INLET.

LIGHT WEIGHT MANHOLE CASTING

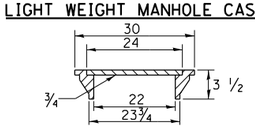

TOTAL WEIGHT 160 LBS.

REVISED - 1-05-16
REVISED - 8-12-12
REVISED - 10-05-11

INLETS, SPECIAL, NO. 7 79.4d

MODEL: Default
FILE NAME: S:\PROJECTS\2010\109D10_IDOT PTB155Item29 Galena US 20\DESIGN\TRANS\DETAILS.dgn

WILLETT HOFMANN & ASSOCIATES INC
ENGINEERING ARCHITECTURE LAND SURVEYING
909 EAST 2ND STREET, DIXON, IL 61021-0367
T: 815-284-3300 DESIGN FIRM: 184-000715

USER NAME = mslick	DESIGNED - AMF	REVISED -	
	DRAWN - TJA	REVISED -	
PLOT SCALE = 480.0000 ' / ft.	CHECKED - GFS	REVISED -	
PLOT DATE = 10/15/2021	DATE - 5/22/20	REVISED -	

STATE OF ILLINOIS
DEPARTMENT OF TRANSPORTATION

IL RTE 84 / US 20
REGION 2 / DISTRICT 2 STANDARDS

SHEET 11 OF 36 SHEETS

F.A.P. RTE.	SECTION	COUNTY	TOTAL SHEETS	SHEET NO.
301	29R-1	JO DAVIESS	679	381

CONTRACT NO. 64880

ILLINOIS | FED. AID PROJECT

NOSE TYPE FOR INLET TOP SLAB

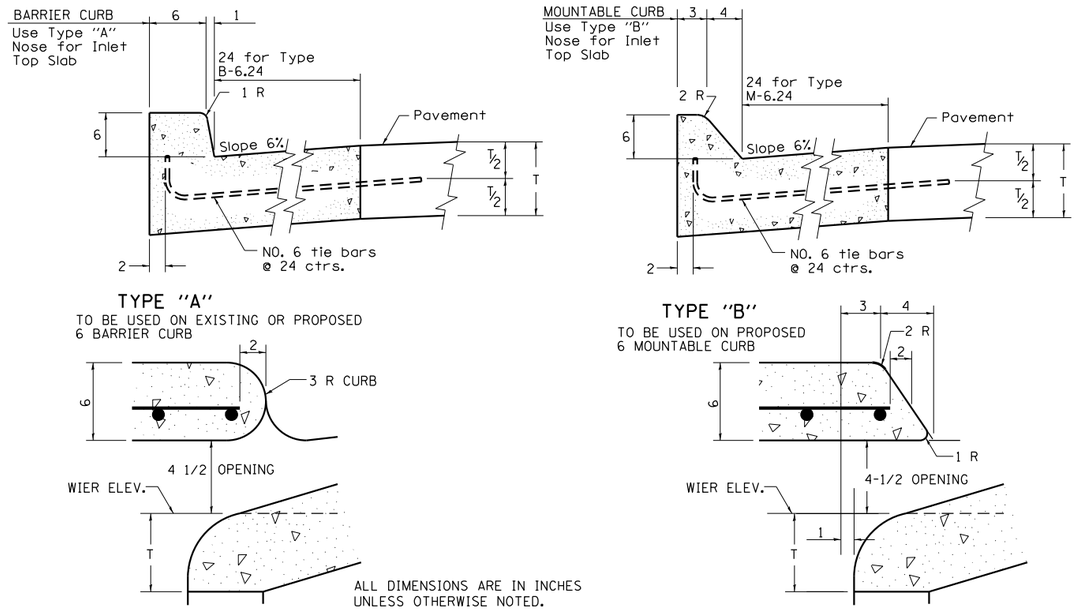

REVISED - 4-14-15
10-05-11

NOSE TYPE FOR INLET TOP SLAB 79.4f

INLETS, SPECIAL, NO. 3, 4, 5, 6 REINFORCEMENT DETAIL

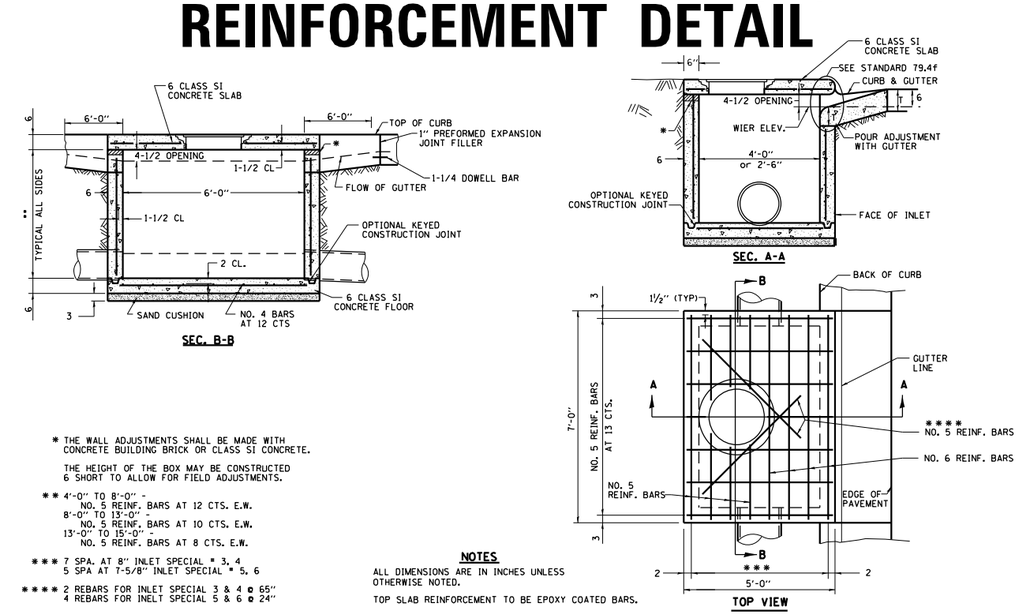

* THE WALL ADJUSTMENTS SHALL BE MADE WITH CONCRETE BUILDING BRICK OR CLASS SI CONCRETE.

THE HEIGHT OF THE BOX MAY BE CONSTRUCTED 6 SHORT TO ALLOW FOR FIELD ADJUSTMENTS.

** 4'-0" TO 8'-0" -
NO. 5 REINF. BARS AT 12 CTS. E.W.
8'-0" TO 13'-0" -
NO. 5 REINF. BARS AT 10 CTS. E.W.
13'-0" TO 15'-0" -
NO. 5 REINF. BARS AT 8 CTS. E.W.

*** 7 SPA. AT 8" INLET SPECIAL # 3, 4
5 SPA AT 7-5/8" INLET SPECIAL # 5, 6

**** 2 REBARS FOR INLET SPECIAL 3 & 4 @ 65"
4 REBARS FOR INLET SPECIAL 5 & 6 @ 24"

NOTES

ALL DIMENSIONS ARE IN INCHES UNLESS OTHERWISE NOTED.

TOP SLAB REINFORCEMENT TO BE EPOXY COATED BARS.

REVISED - 4-13-16
REVISED - 8-27-13
REVISED - 10-05-11

INLETS, SPECIAL, NO. 3, 4, 5, 6 REINFORCEMENT DETAIL 79.4g

DRAIN FOR AGGREGATE BASES IN URBAN AREAS

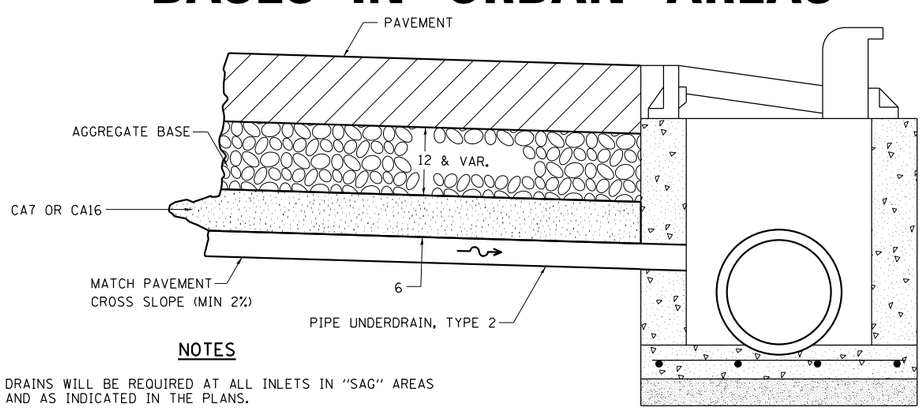

NOTES

DRAINS WILL BE REQUIRED AT ALL INLETS IN "SAG" AREAS AND AS INDICATED IN THE PLANS.

THIS WORK SHALL BE COMPLETED ACCORDING TO SECTION 601 OF THE STANDARD SPECIFICATIONS.

THIS WORK WILL BE PAID FOR AT THE CONTRACT UNIT PRICE PER FOOT FOR PIPE UNDERDRAINS, TYPE 2 OF THE DIAMETER SPECIFIED WHICH PRICE SHALL INCLUDE THE CA7 OR CA16 AND THE CONNECTION TO THE INLET.

ALL DIMENSIONS ARE IN INCHES UNLESS OTHERWISE NOTED.

REVISED - 1-05-16
REVISED - 10-05-11

DRAIN FOR AGGREGATE BASES IN URBAN AREAS 88.4

VANE DRAIN

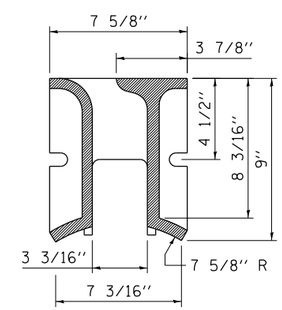

CASTING SECTION

NOTES

VANE DRAIN PAY ITEM SHALL INCLUDE PVC SEWER CARRIER PIPE, VANED SLOT DRAIN CASTING, CONCRETE ENCASEMENT, AND RELATED WORK.

CONCRETE ENCASEMENT SHALL BE CLASS SI CONCRETE.

DRAIN PIPE AND CASTING SHALL BE LAID AT THE SAME SLOPE AS THE PROPOSED ROADWAY CROSS SLOPE. REFER TO THE CROSS SECTIONS FOR PROPOSED CROSS SLOPES.

IN THE CASE OF DIFFERING CROSS SLOPES AT THE CENTERLINE, THE DRAIN PIPE AND CASTING SHALL BREAK AT OR NEAR THE CENTERLINE AND SHALL BE CONSTRUCTED OUT OF TWO (2) SEPARATE PIPES. EACH PIPE WILL THEN BE FITTED WITH A CAP ON THE UPSTREAM END.

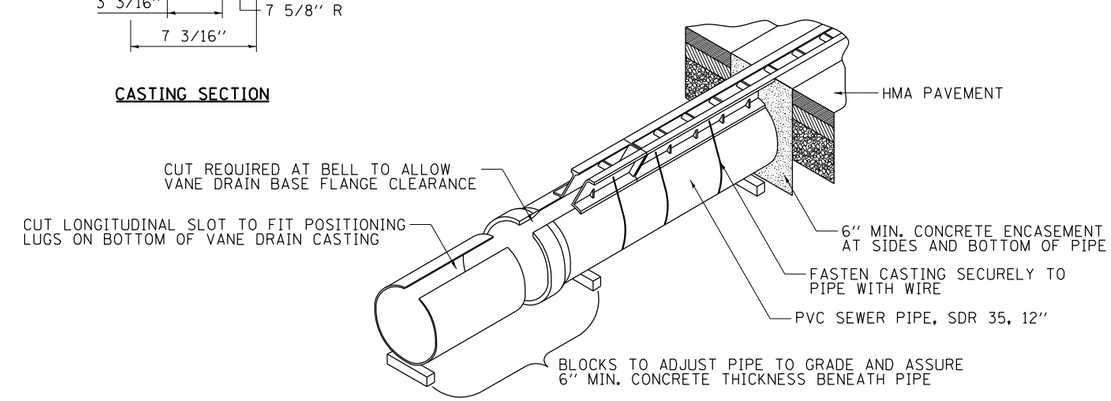

MODEL: Default
FILE NAME: S:\PROJECTS\2010\1095D10_IDOT PTB155Item29 Galena US 20\DESIGN\TRANSDETAILS.dgn

WILLETT HOFMANN & ASSOCIATES INC
ENGINEERING ARCHITECTURE LAND SURVEYING
899 EAST 2ND STREET, DIXON, IL 61021-0367
P. 815-284-2001 DESIGN FIRM: #184-000916

USER NAME = mslick	DESIGNED - AMF	REVISED -	
	DRAWN - TJA	REVISED -	
PLOT SCALE = 480.0000 ' / ft.	CHECKED - GFS	REVISED -	
PLOT DATE = 10/15/2021	DATE - 5/22/20	REVISED -	

STATE OF ILLINOIS
DEPARTMENT OF TRANSPORTATION

IL RTE 84 / US 20
REGION 2 / DISTRICT 2 STANDARDS

SHEET 12 OF 36 SHEETS

F.A.P. RTE.	SECTION	COUNTY	TOTAL SHEETS	SHEET NO.
301	29R-1	JO DAVIESS	679	382
		CONTRACT NO. 64880		
		ILLINOIS	FED. AID PROJECT	

INLETS, SPECIAL

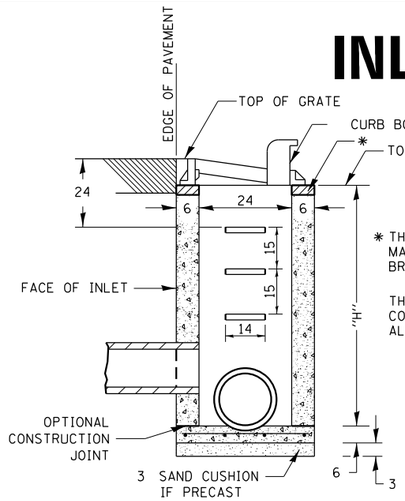

SEC. A-A

✱ THE WALL ADJUSTMENTS SHALL BE MADE WITH CONCRETE BUILDING BRICK OR CLASS SI CONCRETE.

THE HEIGHT OF THE BOX MAY BE CONSTRUCTED 6 SHORT TO ALLOW FOR FIELD ADJUSTMENTS.

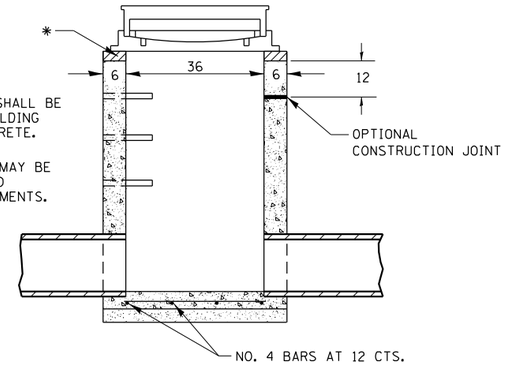

SEC. B-B

NOTES

SEE STANDARD 602701 FOR DETAILS OF STEPS.

EXCEPT AS NOTED HEREON INLET SPECIAL SHALL BE CONSTRUCTED IN ACCORDANCE WITH SECTION 602 OF THE STANDARD SPECIFICATIONS.

THE SIDE WALLS MAY BE BUILT AS PRECAST SEGMENTED SECTIONS.

ALL VOIDS AROUND PIPE ENTRANCE, BOTH INSIDE AND OUTSIDE, SHALL BE SEALED WITH MORTAR.

WEIGHT OF CAST IRON FRAME & GRATE = 530 lbs. ± . STEPS SHALL BE OMITTED WHEN DEPTH OF "H" IS LESS THAN 5 ft.

CLASS SI CONCRETE OR PRECAST CONCRETE SHALL BE USED THROUGHOUT. PRECAST CONCRETE SHALL BE IN ACCORDANCE WITH ARTICLES 504.01 THRU 504.05 OF THE STANDARD SPECIFICATIONS EXCEPT THAT CONCRETE STRENGTH SHALL BE 4,000 psi AFTER 28 DAYS.

THE CONTRACT UNIT PRICE EACH FOR INLETS, SPECIAL SHALL INCLUDE THE COST OF CONSTRUCTING THE INLET BOX, FURNISHING AND INSTALLING THE FRAME AND GRATE, THE CAST IRON STEPS (IF USED), THE PRECAST FLOOR SLABS, SAND CUSHION (WHEN USED) AND REINFORCEMENT BARS.

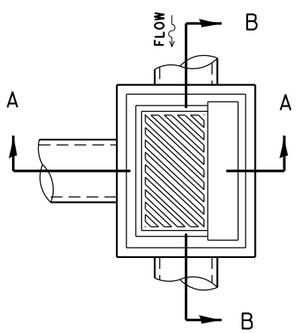

DETAIL OF FRAME & GRATE

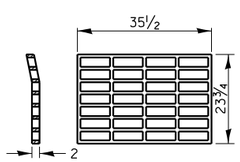

PLAN OF GRATE ✱

✱ THIS GRATE TO BE USED WITHOUT CURB BOX WHEN INLET IS IN DRIVEWAY.

ALL DIMENSIONS ARE IN INCHES UNLESS OTHERWISE NOTED.

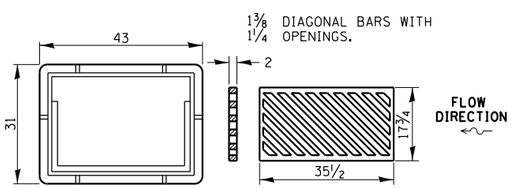

PLAN OF FRAME PLAN OF GRATE

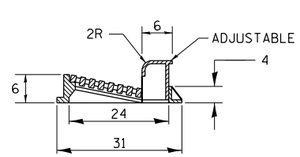

SECTION A-A

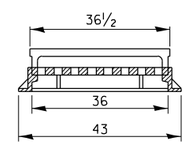

SECTION B-B

REVISED - 1-05-16

INLETS, SPECIAL 10.2

DOUBLE INLET, SPECIAL

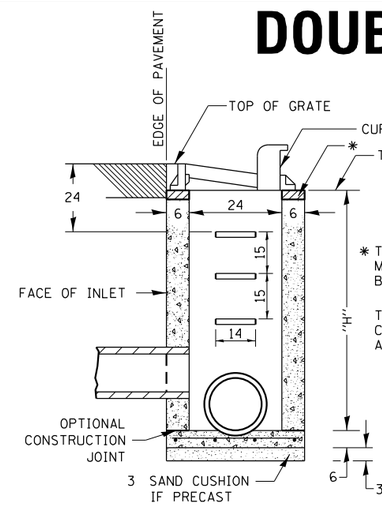

SEC. A-A

✱ THE WALL ADJUSTMENTS SHALL BE MADE WITH CONCRETE BUILDING BRICK OR CLASS SI CONCRETE.

THE HEIGHT OF THE BOX MAY BE CONSTRUCTED 6 SHORT TO ALLOW FOR FIELD ADJUSTMENTS.

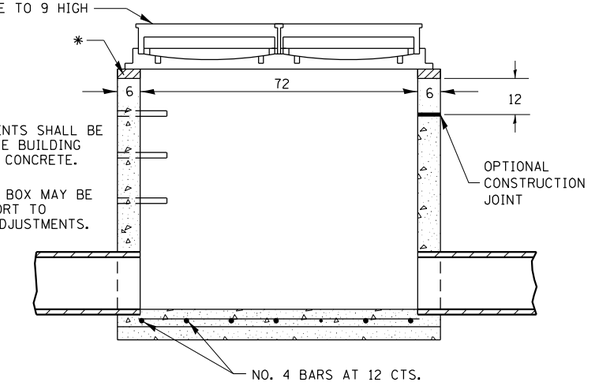

SEC. B-B

NOTES

SEE STANDARD 602701 FOR DETAILS OF STEPS.

EXCEPT AS NOTED HEREON DOUBLE INLET SPECIAL SHALL BE CONSTRUCTED IN ACCORDANCE WITH SECTION 602 OF THE STANDARD SPECIFICATIONS.

THE SIDE WALLS MAY BE BUILT AS PRECAST SEGMENTED SECTIONS.

ALL VOIDS AROUND PIPE ENTRANCE, BOTH INSIDE AND OUTSIDE, SHALL BE SEALED WITH MORTAR.

R-3295-2 DOUBLE UNIT OR EQUIVALENT.

STEPS SHALL BE OMITTED WHEN DEPTH OF "H" IS LESS THAN 5 FOOT.

CLASS SI CONCRETE OR PRECAST CONCRETE SHALL BE USED THROUGHOUT. PRECAST CONCRETE SHALL BE IN ACCORDANCE WITH ARTICLES 504.01 THRU 504.05 OF THE STANDARD SPECIFICATIONS EXCEPT THAT CONCRETE STRENGTH SHALL BE 4,000 psi AFTER 28 DAYS.

CLASS SI CONCRETE OR PRECAST CONCRETE SHALL BE USED THROUGHOUT. THE CONTRACT UNIT PRICE EACH FOR INLET SPECIAL SHALL INCLUDE THE COST OF CONSTRUCTING THE INLET BOX, FURNISHING AND INSTALLING THE FRAME AND GRATE, THE STEPS (IF USED), THE PRECAST FLOOR SLABS, SAND CUSHION (WHEN USED) AND REINFORCEMENT BARS.

DETAIL OF FRAME & GRATE

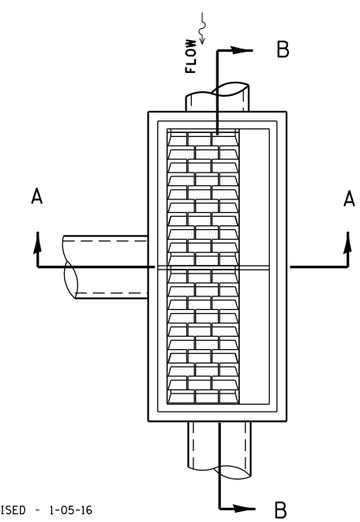

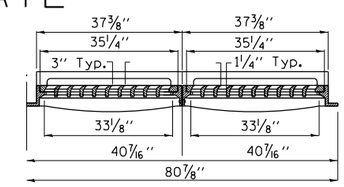

SECTION B-B

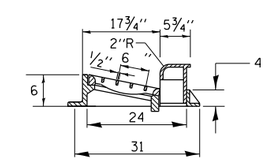

SECTION A-A

REVISED - 1-05-16
REVISED - 7-16-15
REVISED - 10-13-11

ALL DIMENSIONS ARE IN INCHES UNLESS OTHERWISE NOTED.

DOUBLE INLET, SPECIAL 12.2

MODEL: Default
FILE NAME: S:\PROJECTS\2010\1095D10_IDOT PTB195\Item29 Galena_US_20\DESIGN\TRANS\DETAILS.dgn

Wilbur Smith Hoffmann Associates Inc. Transportation Planning Land Surveying 809 East 2nd Street, Dixon, IL 61021-0367 T: 815-284-0301 Design Firm: #184-000916	USER NAME = mslick	DESIGNED - AMF	REVISED -	STATE OF ILLINOIS DEPARTMENT OF TRANSPORTATION	IL RTE 84 / US 20 REGION 2 / DISTRICT 2 STANDARDS
6-27-14 10-13-11		DRAWN - TJA	REVISED -		
	PLOT SCALE = 480.0000 ' / in.	CHECKED - GFS	REVISED -		
	PLOT DATE = 10/15/2021	DATE - 5/22/20	REVISED -		SHEET 13 OF 36 SHEETS

F.A.P. RTE.	SECTION	COUNTY	TOTAL SHEETS	SHEET NO.
301	29R-1	JO DAVIESS	679	383
		CONTRACT NO. 64880		
	ILLINOIS	FED. AID PROJECT		

FRAME AND GRATE FOR INLETS, SPECIAL

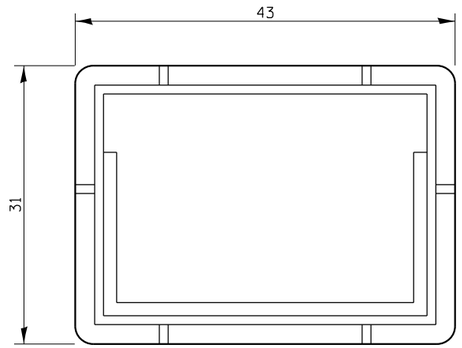

PLAN OF FRAME

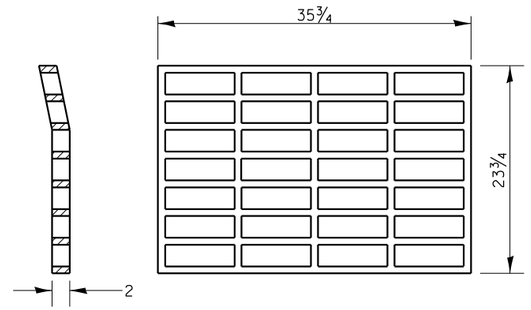

PLAN OF GRATE *

* THIS GRATE TO BE USED WITHOUT CURB BOX WHEN INLET IS IN DRIVEWAY.

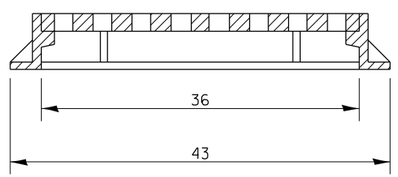

ALL DIMENSIONS ARE IN INCHES UNLESS OTHERWISE NOTED.

R-3290-A OR EQUIVALENT
APPROXIMATE WEIGHT OF CAST IRON FRAME & GRATE - 530 LBS.

REVISED - 4-14-15
REVISED - 6-27-14
REVISED - 10-14-11

FRAME AND GRATE FOR INLETS, SPECIAL **13.2d**

STANDARD INLET FOR CURB & GUTTER

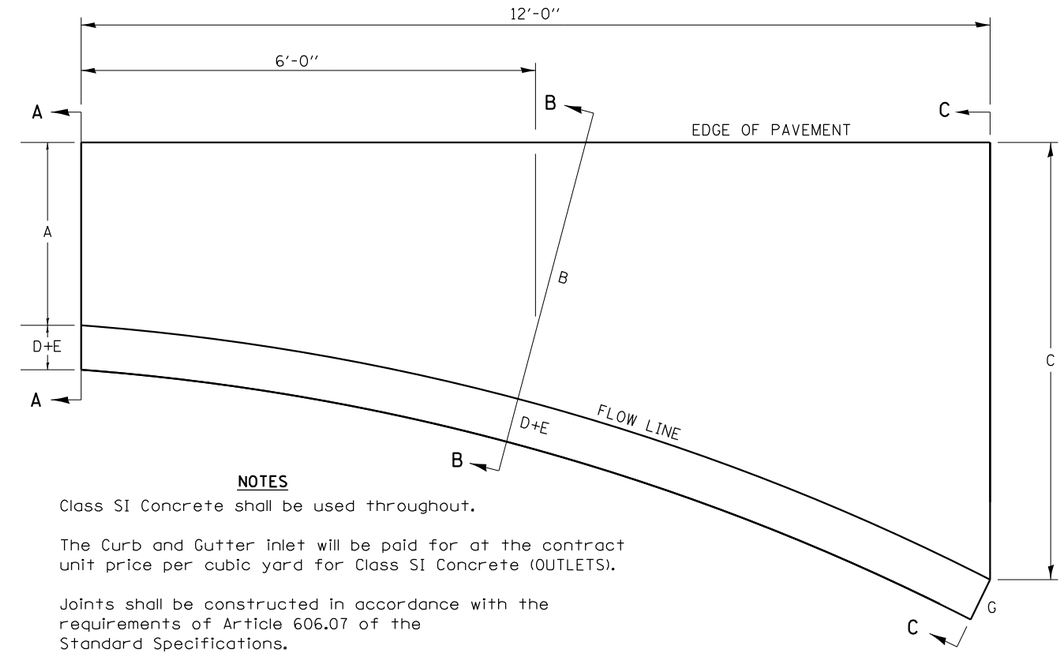

NOTES

Class SI Concrete shall be used throughout.

The Curb and Gutter inlet will be paid for at the contract unit price per cubic yard for Class SI Concrete (OUTLETS).

Joints shall be constructed in accordance with the requirements of Article 606.07 of the Standard Specifications.

When curb and gutter is constructed adjacent to flexible pavement, a 1" expansion joint shall be installed at construction joints.

All dimensions are in inches unless otherwise noted.

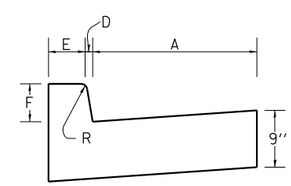

SECTION A-A

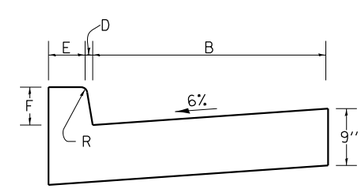

SECTION B-B

TYPE OF CURB & GUTTER	TABLE OF DIMENSIONS								CONCRETE QUANTITY A-A TO C-C (CU YDS)
	A	B	C	D	E	F	G	R	
B-6.06	6	15	4'	1	6	6	7	1	0.87
B-6.12	12	18.25	4'	1	6	6	7	1	0.95
B-6.18	18	27.25	4' 9"	1	6	6	7	1	1.18
B-6.24	24	32.4	4' 9"	1	6	6	7	1	1.30
M-4.06	6	17.8	3' 9"	4	3	4	7	3	0.75
M-4.12	12	18.25	4'	4	3	4	7	3	0.91
M-4.18	18	27.25	4' 9"	4	3	4	7	3	1.14
M-4.24	24	32.4	4' 9"	4	3	4	7	3	1.25
M-6.06	6	17.8	3' 9"	6	2	6	8	3	0.86
M-6.12	12	18.25	4'	6	2	6	8	2	0.96
M-6.18	18	27.25	4' 9"	6	2	6	8	2	1.20
M-6.24	24	32.4	4' 9"	6	2	6	8	2	1.30

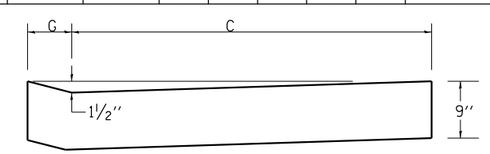

SECTION C-C

REVISED - 11-12-14
REVISED - 8-27-13
REVISED - 10-10-06

STANDARD INLET FOR CURB & GUTTER **21.2**

MODEL: Default
FILE NAME: S:\PROJECTS\2010\109510_IDOT_PTB155\Item29 Galena US_20\DESIGN\TRANS\DETAILS.dgn

WILLETT HOFMANN & ASSOCIATES INC
ENGINEERING ARCHITECTURE LAND SURVEYING
809 EAST 2ND STREET, DIXON, IL 61021-0367
T: 815-284-3301 DESIGN FIRM: 184-000110

USER NAME = mslick	DESIGNED - AMF	REVISED -	
	DRAWN - TJA	REVISED -	
PLOT SCALE = 480.0000 ' / ft.	CHECKED - GFS	REVISED -	
PLOT DATE = 10/15/2021	DATE - 5/22/20	REVISED -	

STATE OF ILLINOIS
DEPARTMENT OF TRANSPORTATION

IL RTE 84 / US 20
REGION 2 / DISTRICT 2 STANDARDS

SHEET 14 OF 36 SHEETS

F.A.P. RTE.	SECTION	COUNTY	TOTAL SHEETS	SHEET NO.
301	29R-1	JO DAVIESS	679	384
		CONTRACT NO. 64880		
		ILLINOIS	FED. AID PROJECT	

UNDERDRAIN FOR ACROSS ROAD (AR) CULVERTS

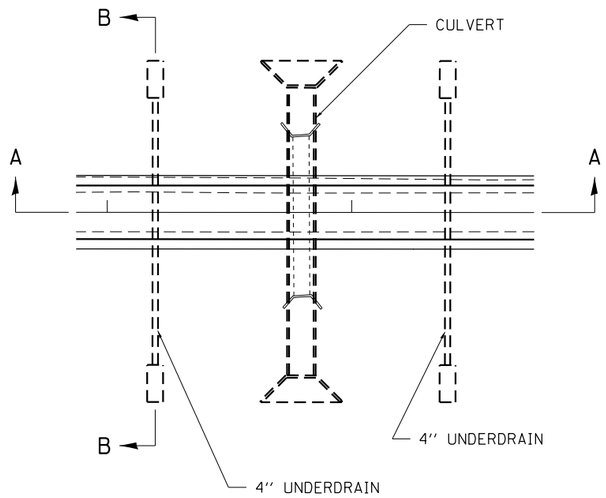

NOTES:

IN SAG CONDITIONS INSTALL PIPE UNDERDRAINS ON BOTH SIDES OF CULVERT.

ON HIGHWAY GRADES GREATER THAN 2% INSTALL PIPE UNDERDRAINS ON THE HIGH SIDE OF THE CULVERT.

THIS WORK SHALL BE COMPLETED ACCORDING TO SECTION 601 OF THE STANDARD SPECIFICATION.

THE UNDERDRAIN SHALL EXTEND UNTIL INTERSECTING WITH THE SIDE SLOPES. THE PIPES SHALL DRAIN INTO CONCRETE HEADWALLS. (SEE ARTICLE 601.05 OF THE STANDARD SPECIFICATIONS AND HIGHWAY STANDARDS 601101).

THE UNDERDRAIN SHALL BE A MINIMUM OF 12'' BELOW THE EXISTING PAVEMENT.

THE TRENCH FOR THE UNDERDRAIN SHALL BE BACKFILLED WITH CA11 OR CA16.

THE TRENCH SHALL BE WRAPPED USING A FABRIC ENVELOPE MEETING THE REQUIREMENTS OF ARTICLE 1080.05 OF THE STANDARD SPECIFICATIONS. FABRIC ENCASING THE PIPE SHALL BE ELIMINATED.

PIPE UNDERDRAINS WILL BE PAID FOR AT THE CONTRACT UNIT PRICE PER FOOT FOR PIPE UNDERDRAINS 4''.

CONCRETE HEADWALLS WILL BE PAID FOR AT THE CONTRACT UNIT PRICE PER EACH FOR CONCRETE HEADWALLS FOR PIPE DRAINS.

A DELINEATOR SHALL BE PLACED AT EACH CONCRETE HEADWALL. THESE BE PAID FOR AT THE CONTRACT UNIT PRICE PER EACH FOR DELINEATORS.

SEC. A-A

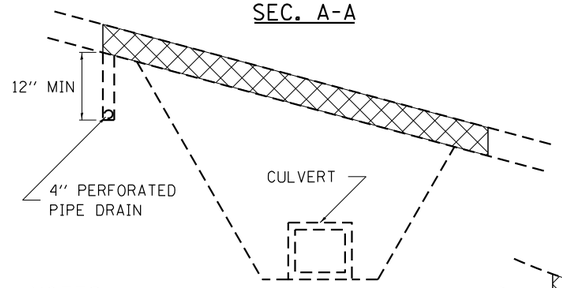

NOTES:
(HIGHWAY GRADE GREATER THAN 2%)

SEC. A-A

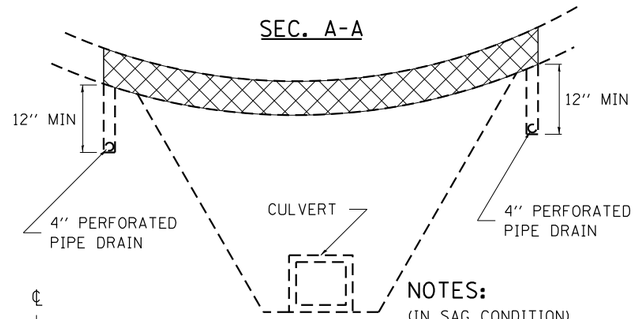

NOTES:
(IN SAG CONDITION)
(PIPE DRAIN ON EACH SIDE)

SEC. B-B

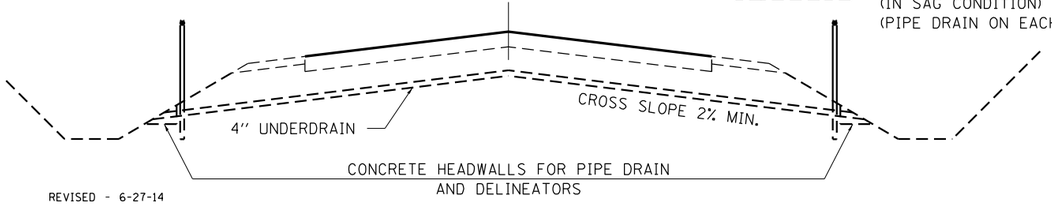

REVISED - 6-27-14
7-05-12

UNDERDRAIN FOR ACROSS ROAD (AR) CULVERTS 37.2

RESERVED PARKING SIGN DETAIL

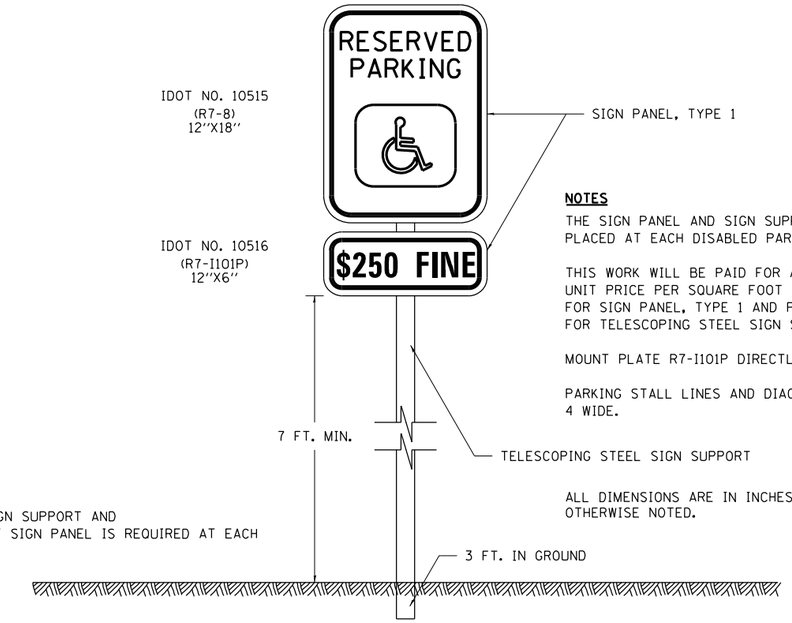

NOTES

THE SIGN PANEL AND SIGN SUPPORT SHALL BE PLACED AT EACH DISABLED PARKING STALL.

THIS WORK WILL BE PAID FOR AT THE CONTRACT UNIT PRICE PER SQUARE FOOT FOR SIGN PANEL, TYPE 1 AND PER FOOT FOR TELESCOPING STEEL SIGN SUPPORT.

MOUNT PLATE R7-I101P DIRECTLY BELOW SIGN R7-8.

PARKING STALL LINES AND DIAGONALS SHALL BE 4 WIDE.

ALL DIMENSIONS ARE IN INCHES UNLESS OTHERWISE NOTED.

QUANTITIES

12 FT OF SIGN SUPPORT AND
2 SQ. FT. OF SIGN PANEL IS REQUIRED AT EACH LOCATION.

DISABLED PARKING STRIPING

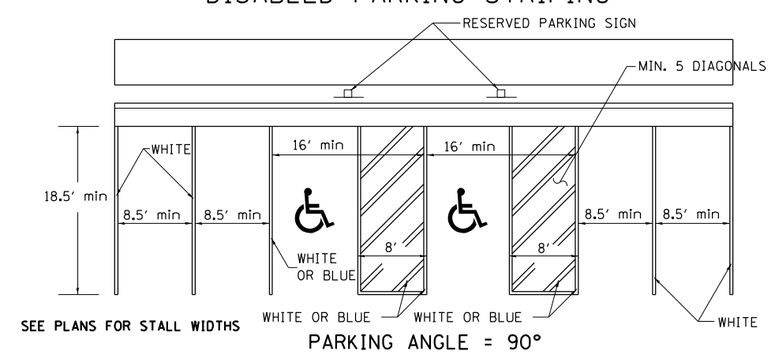

SEE PLANS FOR STALL WIDTHS

PARKING ANGLE = 90°

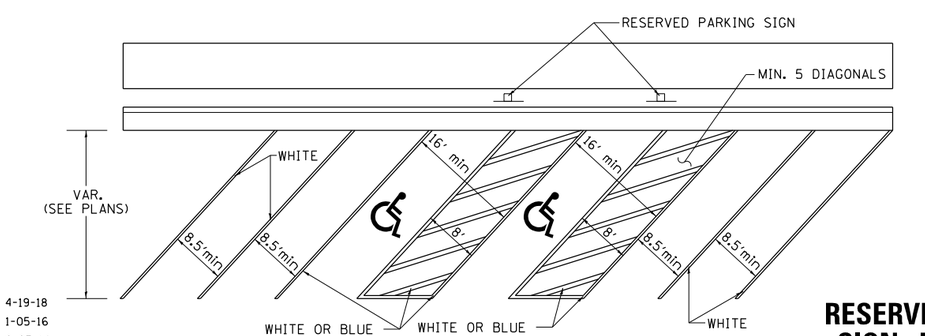

LESS THAN 90° PARKING ANGLE

REVISED - 4-19-18
REVISED - 1-05-16
REVISED - 6-27-14
REVISED - 10-14-11

RESERVED PARKING SIGN DETAIL 44.2

MODEL: Default
FILE NAME: S:\PROJECTS\2010\1095D10_IDOT_PTB155Item29 Galena_US 20\DESIGN\TRANS\DETAILS.dgn

WILLETT HOFMANN & ASSOCIATES INC ENGINEERING ARCHITECTURE LAND SURVEYING 899 EAST 2ND STREET, DIXON, IL 61021-0367 T 815-284-3300 DESIGN FIRM #184-000710	USER NAME = mslick	DESIGNED - AMF	REVISED -	STATE OF ILLINOIS DEPARTMENT OF TRANSPORTATION	IL RTE 84 / US 20 REGION 2 / DISTRICT 2 STANDARDS
		DRAWN - TJA	REVISED -		
	PLOT SCALE = 480.0000 ' / ft.	CHECKED - GFS	REVISED -		
	PLOT DATE = 10/15/2021	DATE - 5/22/20	REVISED -		SHEET 15 OF 36 SHEETS

F.A.P. RTE.	SECTION	COUNTY	TOTAL SHEETS	SHEET NO.
301	29R-1	JO DAVIESS	679	385
		CONTRACT NO. 64880		
		ILLINOIS	FED. AID PROJECT	

PIPE HANDRAILS FOR STEPS

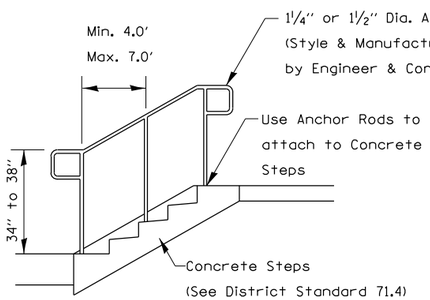

HANDRAIL FOR CONCRETE STEPS

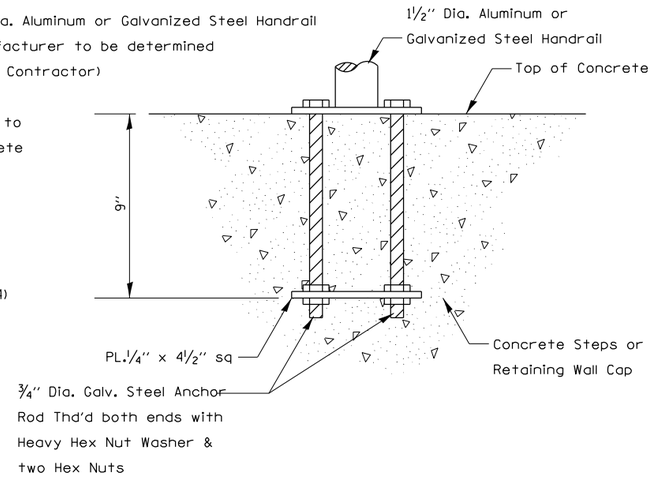

ANCHOR ROD DETAIL

(Included in the cost of Hand or Safety Rail)

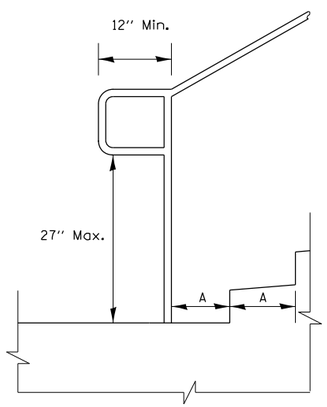

Extension at Bottom of Run Detail

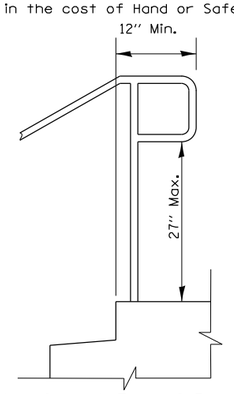

Extension at Top of Run Detail

Notes:

Stairways shall have continuous handrails both sides of all stairs.

The inside handrail on switchback or dogleg stairs shall always be continuous.

Gripping surfaces shall be uninterrupted by newel posts, other construction elements, or obstructions.

Ends of handrail shall be either rounded or returned smoothly to floor, wall, or post.

Hand & safety rails shall not rotate within their fittings.

The clear space between hanrails and any wall shall be 1½"

Handrail shall conform to Section 509 with the exception that all pipe and connections shall be welded galvanized or aluminum according to Article 1006.30, or 1006.34.

The diameter of the gripping surface of the handrail shall be 1-1/4" to 1-1/2"

This work shall be paid for at the contract unit price per FOOT for PIPE HANDRAIL.

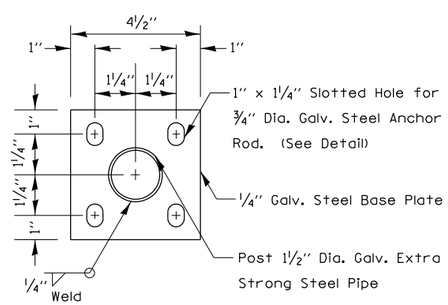

POST BASE PLATE DETAIL

(Included in the cost of Hand or Safety Rail)

REVISED - 1-05-16

REVISED - 10-14-11

PIPE HANDRAILS FOR STEPS 63.2

MODEL: Default
FILE NAME: S:\PROJECTS\2010\1095D10_IDOT_PTB135\Item29_Galena_US_20\DESIGN\TRANS\DETAILS.dgn

WILLETT HOFMANN & ASSOCIATES INC ENGINEERING ARCHITECTURE LAND SURVEYING 809 EAST 2ND STREET, DIXON, IL 61021-0367 T. 815-284-3301 DESIGN FIRM: #184-000910	USER NAME = mslick	DESIGNED - AMF	REVISED -	STATE OF ILLINOIS DEPARTMENT OF TRANSPORTATION	IL RTE 84 / US 20 REGION 2 / DISTRICT 2 STANDARDS	F.A.P. RTE. 301	SECTION 29R-1	COUNTY JO DAVIESS	TOTAL SHEETS 679 / SHEET NO. 386
		DRAWN - TJA	REVISED -					CONTRACT NO. 64880	
	PLOT SCALE = 480.0000 ' / in.	CHECKED - GFS	REVISED -						
	PLOT DATE = 10/15/2021	DATE - 5/22/20	REVISED -		SHEET 16 OF 36 SHEETS		ILLINOIS	FED. AID PROJECT	

BOX CULVERT END SECTIONS

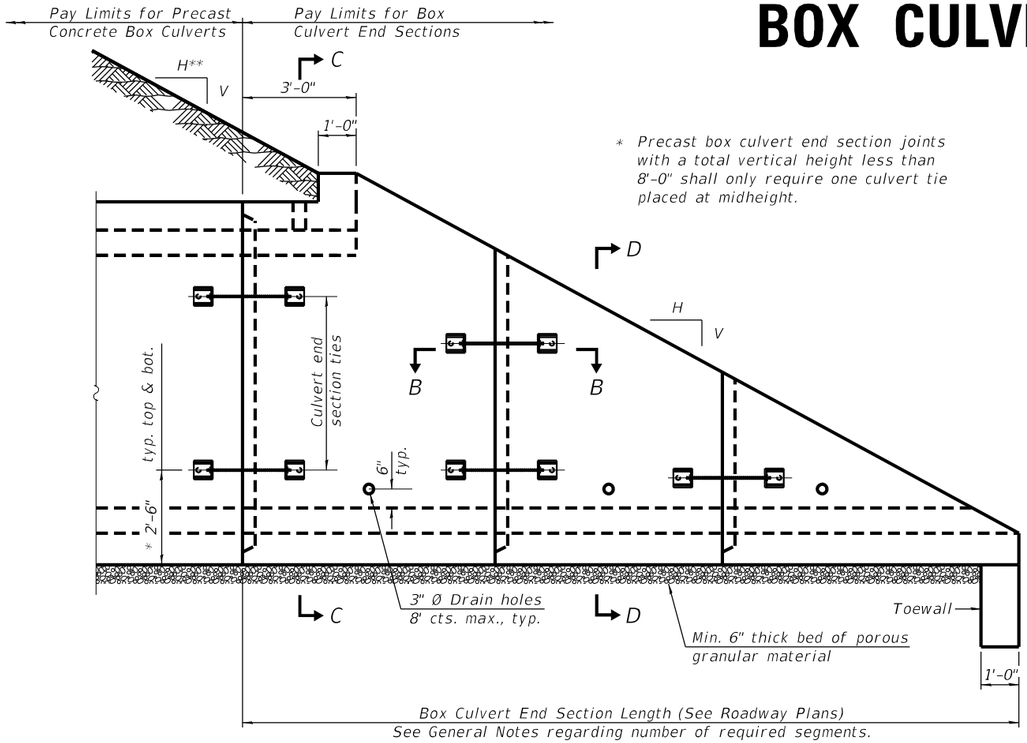

* Precast box culvert end section joints with a total vertical height less than 8'-0" shall only require one culvert tie placed at midheight.

ELEVATION

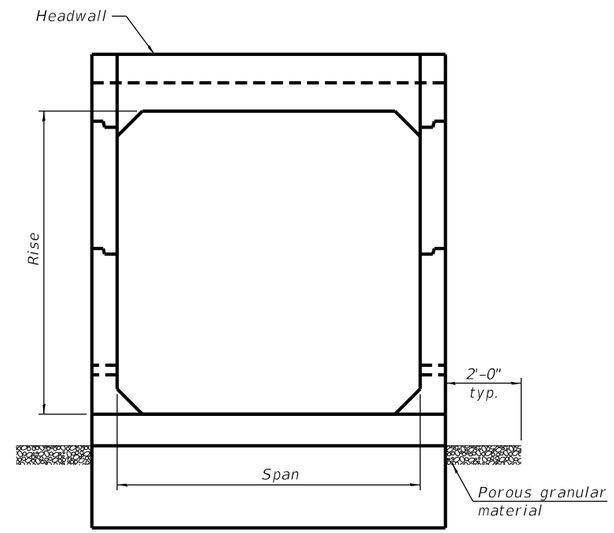

END VIEW

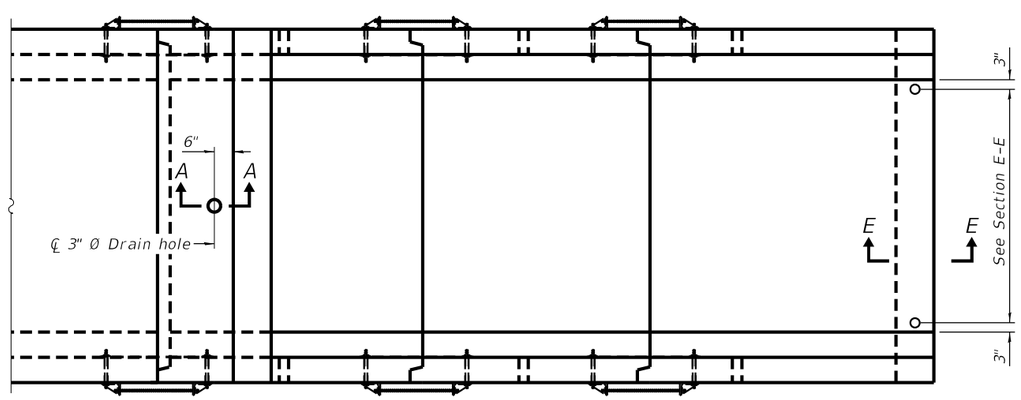

PLAN

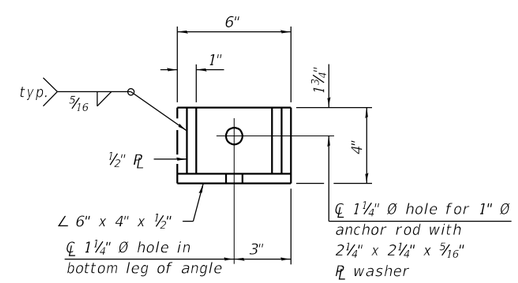

RESTRAINT ANGLE DETAIL

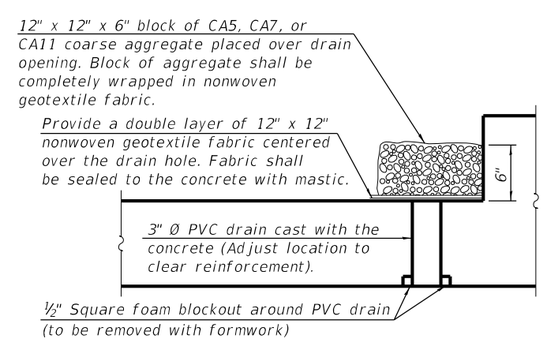

SECTION A-A

(All costs associated with furnishing and constructing the above drain detail will not be measured for payment but shall be included in the contract unit price for the associated work.)

GENERAL NOTES

Box Culvert End Sections shall be constructed according to the requirements of Section 540 of the Standard Specifications except as modified herein. This work will be measured for payment as each, with each end of each culvert being one each. End sections will be paid for at the contract unit price per each for Box Culvert End Sections of the culvert number specified.

Typical box section dimensions, materials, and reinforcement details for Box Culvert End Sections shall be according to the requirements of ASTM C 1577 as required for the design of the portion of the culvert within the limits of Precast Concrete Box Culverts except as modified herein.

Number of segments shown in Elevation is for example only. Length and number of precast box sections required to construct Box Culvert End Sections shall be determined by the Contractor.

** See roadway plans for embankment slope (V:H).

1" Ø anchor rods for the culvert ties shall conform to the requirements of ASTM F1554, Grade 105. Structural steel for tie plate and restraint angle shall conform to the requirements of Article 1006.04 of the Standard Specifications. All components of the culvert tie detail shall be galvanized according to the requirements of AASHTO M 111 or M 232 as applicable. 2¼" x 2¼" x 5/16" plate washers shall be provided under each nut required for the anchor rods. Anchor rods connecting precast sections shall be brought to a snug tight condition followed by an additional ½ turn on one of the nuts for anchor rods installed in the walls. Match marks shall be provided on the bolt and nut to verify relative rotation between the bolt and the nut. Holes in the walls for the culvert tie assembly may be drilled using core bits in lieu of using formed holes.

All costs associated with furnishing and installing or constructing the toewall and culvert ties will not be measured for payment but shall be included in the contract unit price for Box Culvert End Sections of the culvert number specified.

Drain holes shall conform to the requirements of Article 503.11 of the Standard Specifications unless noted otherwise.

Nonwoven geotextile fabric shall conform to the requirements of Article 1080.01. The minimum weight of the fabric shall be 6 oz. / sq. yd..

For end sections with traversable pipe grate systems, see grate detail sheet for required modifications.

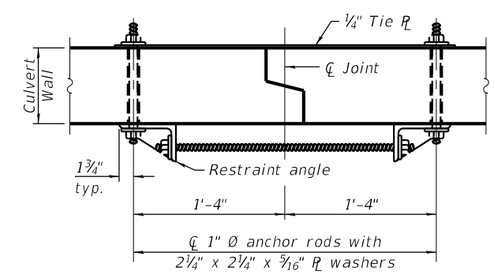

SECTION B-B

(Showing end section tie details)

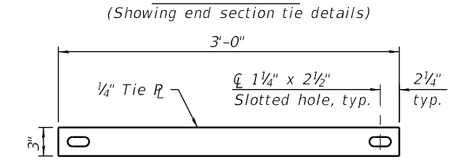

TIE PLATE DETAIL

REVISED - 1-10-18
REVISED - 1-05-16
REVISED - 5-09-14

SCB-TES 2-17-2017

(Sheet 1 of 2)

MODEL: Default
FILE NAME: S:\PROJECTS\2010\1095D10_IDOT_PTB155Item29_Galena US 20\DESIGN\TRANS\DETAILS.dgn

WILLETT HOFMANN & ASSOCIATES INC
ENGINEERING ARCHITECTURE LAND SURVEYING
809 EAST 2ND STREET, DIXON, IL 61021-0367
TEL (815) 284-3300 DESIGN FIRM: 184-000916

USER NAME = mslick	DESIGNED - AMF	REVISED -	
	DRAWN - TJA	REVISED -	
PLOT SCALE = 480.0000 ' / IL.	CHECKED - GFS	REVISED -	
PLOT DATE = 10/15/2021	DATE - 5/22/20	REVISED -	

STATE OF ILLINOIS
DEPARTMENT OF TRANSPORTATION

IL RTE 84 / US 20
REGION 2 / DISTRICT 2 STANDARDS

SHEET 17 OF 36 SHEETS

F.A.P. RTE.	SECTION	COUNTY	TOTAL SHEETS	SHEET NO.
301	29R-1	JO DAVIESS	679	387
		CONTRACT NO. 64880		
		ILLINOIS	FED. AID PROJECT	

BOX CULVERT END SECTIONS

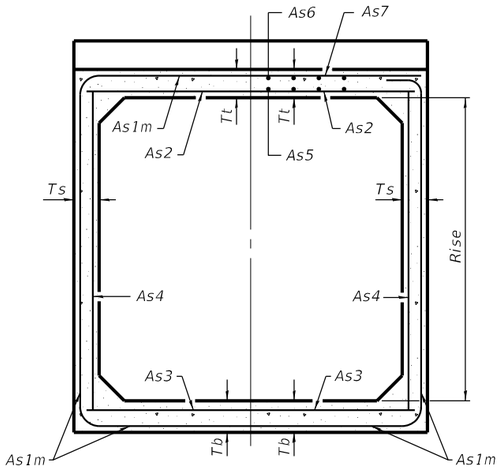

(Design Earth Cover ≥ 2 ft) (Design Earth Cover < 2 ft)

SECTION C-C

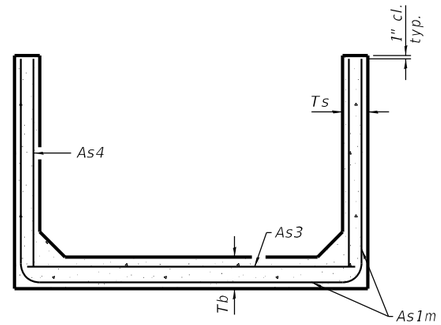

SECTION D-D

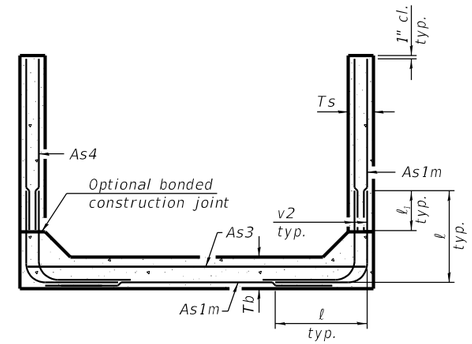

ALTERNATE SECTION D-D

As1m REINFORCEMENT (in.²/ ft)											
Ts (in.) \ Rise (ft)	2	3	4	5	6	7	8	9	10	11	12
4	0.19	0.17									
5	0.26	0.21	0.18								
6	0.22	0.26	0.23	0.22							
7	0.25	0.33	0.59	0.27	0.28						
8	0.40	0.35	0.43	0.39	0.36	0.34	0.40				
9	0.44	0.39	0.35	0.43	0.40	0.37	0.36	0.48			
10	0.48	0.42	0.38	0.47	0.44	0.41	0.38	0.42	0.56		
11	0.52	0.45	0.54	0.50	0.46	0.44	0.41	0.46	0.50	0.65	
12	0.55	0.49	0.58	0.54	0.50	0.48	0.45	0.46	0.46	0.61	0.75

(As1m reinforcement based upon welded wire reinforcement conforming to AASHTO M 55 or M 221).

ℓ1 DIMENSION

#3 bar = 2'-0"
#4 bar = 2'-8"
#5 bar = 3'-4"
#6 bar = 3'-11"

Notes:

Alternate Section D-D is provided to allow the Contractor the option of casting the bottom slab of the end section first followed by construction of the sidewalls using conventional forming methods. Shop drawings that detail slab thickness and reinforcement layout shall be submitted to the Engineer for review and approval when using Alternate Section D-D.

The size and spacing of the v2 bars shall provide a minimum reinforcement area along each face of the walls (in.²/ft.) equal to 1.10*(As1m). v2 bars may consist of #3 thru #6 size reinforcement bars and the longitudinal spacing shall not exceed the lesser of the wall thickness or 8 inches.

Bonded construction joints shall be prepared according to Article 503.09 of the Standard Specifications.

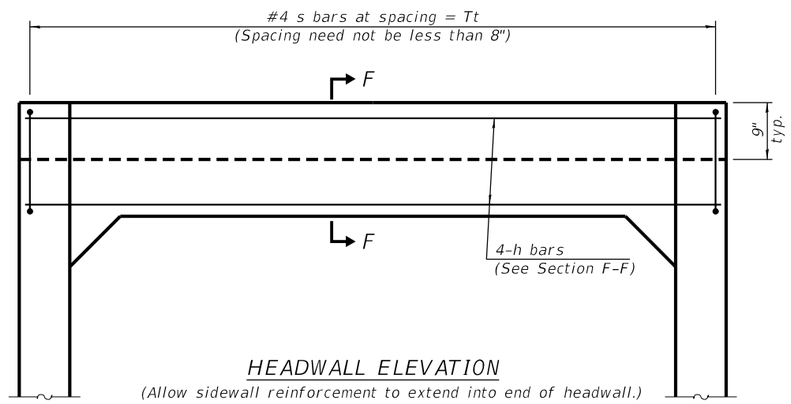

HEADWALL ELEVATION

(Allow sidewall reinforcement to extend into end of headwall.)

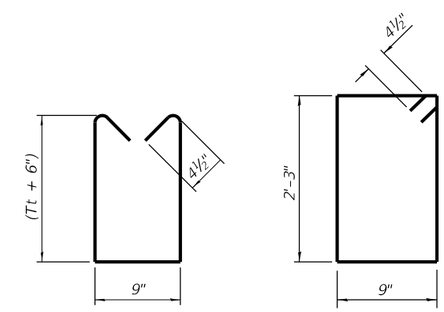

BAR s BAR s1

TOEWALL CONSTRUCTION SEQUENCE

1. Perform excavation and construct toewall.
2. Backfill according to the applicable paragraphs of Article 502.10 of the Standard Specifications and place bedding for precast box culvert end sections.
3. Set precast box culvert end section.
4. Drill and epoxy grout reinforcement in toewall in accordance with Section 584 of the Standard Specifications.
5. Pressure grout voids using non-shrink grout conforming to Section 1024 of the Standard Specifications.

* The Contractor may furnish a precast or cast-in-place toewall. The Contractor shall be responsible for the strength and stability of the precast toewall during handling. Additional lifting points may be required depending upon the length of the toewall or the Contractor may need to modify the design of the toewall for the proposed handling the method.

** If soil conditions permit, the sides of the toewall may be poured directly against the soil. The clear cover on the sides of the toewall shall be increased to 3" by increasing the thickness of the toewall.

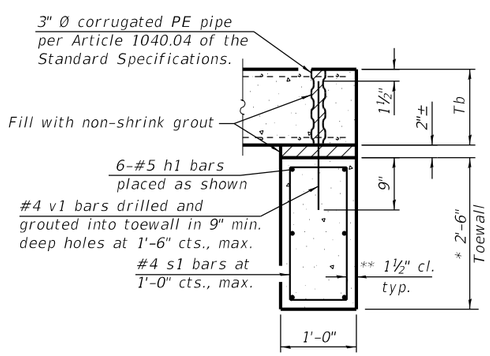

SECTION E-E

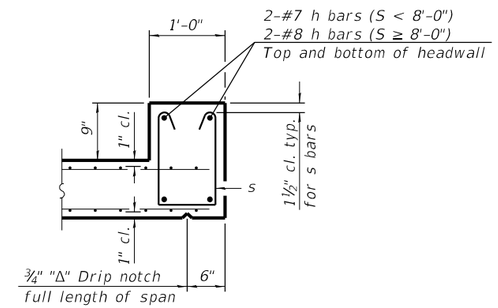

SECTION F-F

REVISED - 1-10-18
REVISED - 1-05-16
REVISED - 5-09-14

SCB-TES 2-17-2017

(Sheet 2 of 2)

MODEL: Default
FILE NAME: S:\PROJECTS\2010\1095D10_IDOT_PTB135\Item29_Galena_US_20\DESIGN\TRANS\DETAILS.dgn

WILLETT HOFMANN & ASSOCIATES INC
ENGINEERING ARCHITECTURE LAND SURVEYING
809 EAST 2ND STREET, DIXON, IL 61021-0367
T. 815-284-3301 DESIGN FIRM: #184-000716

USER NAME = mslick	DESIGNED - AMF	REVISED -	
	DRAWN - TJA	REVISED -	
PLOT SCALE = 480.0000 ' / in.	CHECKED - GFS	REVISED -	
PLOT DATE = 10/15/2021	DATE - 5/22/20	REVISED -	

STATE OF ILLINOIS
DEPARTMENT OF TRANSPORTATION

IL RTE 84 / US 20
REGION 2 / DISTRICT 2 STANDARDS

SHEET 18 OF 36 SHEETS

F.A.P. RTE.	SECTION	COUNTY	TOTAL SHEETS	SHEET NO.
301	29R-1	JO DAVIESS	679	388
		CONTRACT NO. 64880		
	ILLINOIS	FED. AID PROJECT		

HOT-MIX ASPHALT APPROACHES AND MAILBOX RETURNS

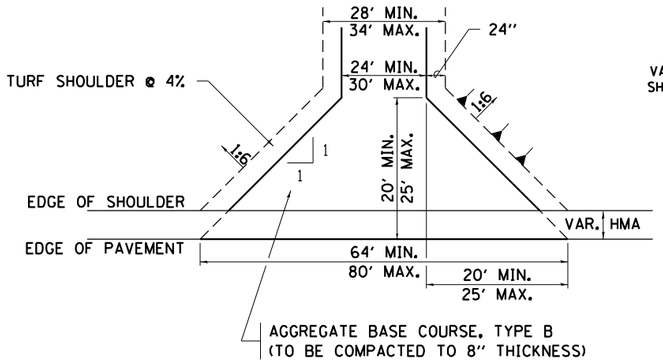

FIELD ENTRANCE

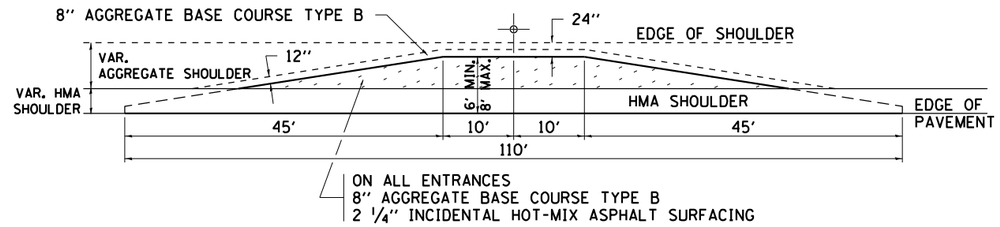

MAILBOX TURNOUT

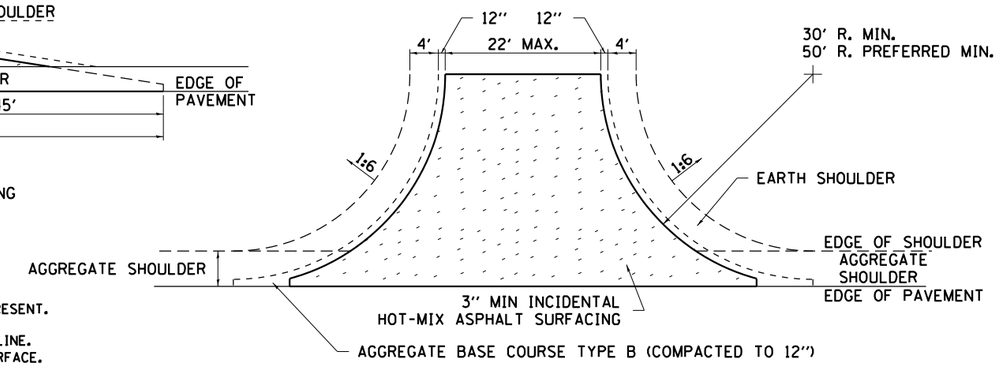

SIDE ROAD RETURN/EARTH SHOULDER

NOTE

1. TURNOUTS ARE TO BE CONSTRUCTED ON THE APPROACH SIDE OF ALL PE & CE REGARDLESS IF A MAILBOX IS PRESENT.
2. ALL PE & CE ARE TO BE SURFACED TO RIGHT OF WAY LINE. AREA BEHIND RIGHT OF WAY SHALL MATCH EXISTING SURFACE.
3. ALL PE & CE TO BE CONSTRUCTED WITH AN 8" AGGREGATE BASE COURSE, TYPE B AND WITH A 2 1/4" INCIDENTAL HOT-MIX ASPHALT SURFACING, UNLESS OTHERWISE NOTED.
4. FE ARE TO BE AGGREGATE TO RIGHT OF WAY OR TOUCH DOWN, WHICH EVER IS GREATEST.
5. EXCAVATION REQUIRED FOR PLACEMENT OF AGGREGATE BASE COURSE SHALL BE INCLUDED IN THE COST OF THE AGGREGATE BASE COURSE.
6. ON ENTRANCES THE CONTRACTOR HAS THE OPTION OF USING RADIUS RETURNS. USE RADII OF 20' TO 60'.
7. SIDE ROADS SHALL HAVE 3" INCIDENTAL PLACED IN TWO 1½" LIFTS.

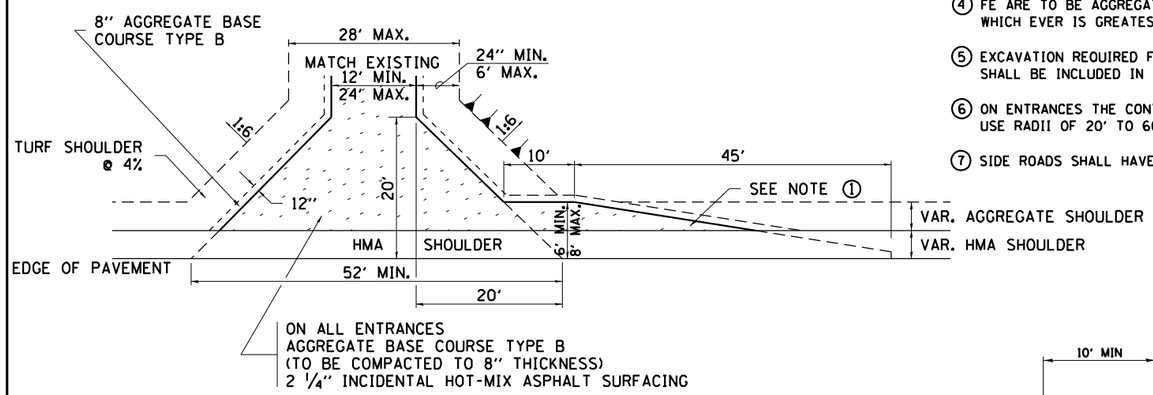

PRIVATE ENTRANCE

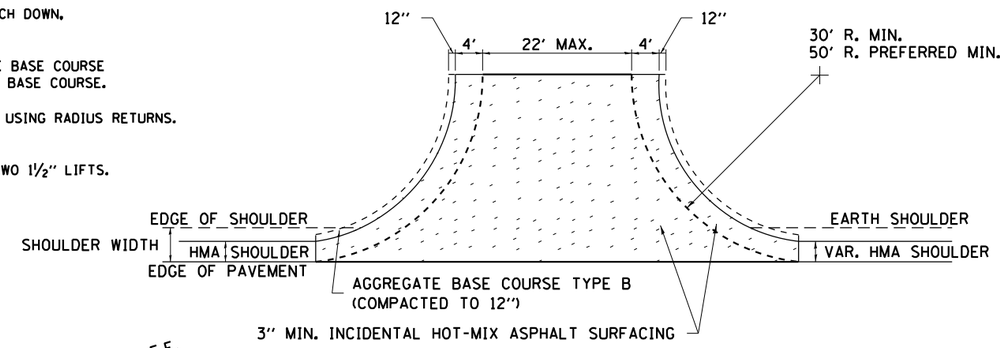

SIDE ROAD RETURN/HMA SHOULDER

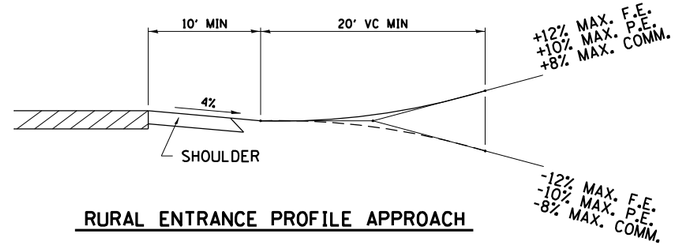

RURAL ENTRANCE PROFILE APPROACH

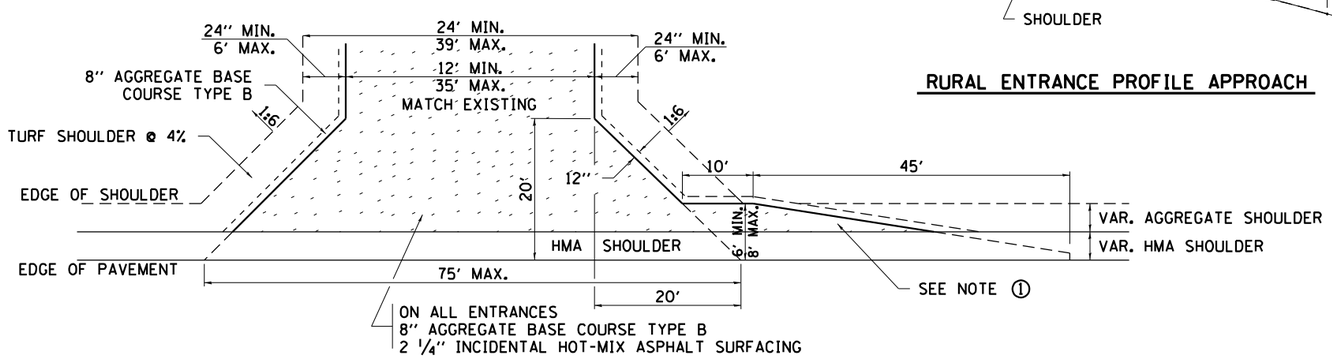

COMMERCIAL ENTRANCE

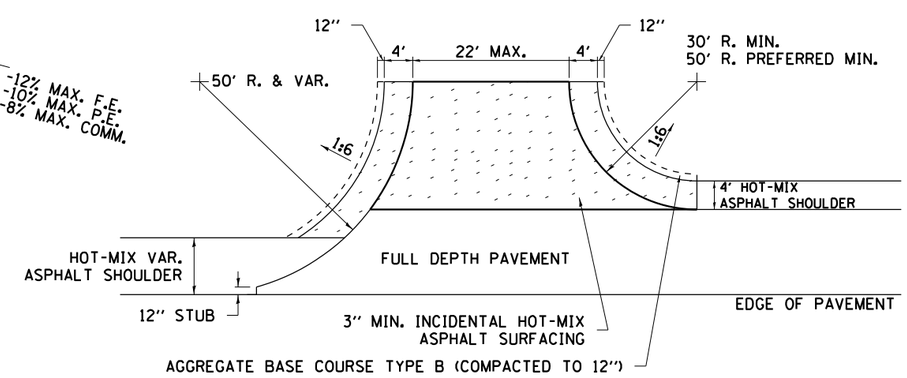

SIDE ROAD RETURN WITH RIGHT TURN LANE

REVISED - 8-03-17
REVISED - 1-13-17
REVISED - 6-27-14
REVISED - 8-27-13

HOT-MIX ASPHALT APPROACHES AND MAILBOX RETURNS 20.1

ENTRANCE APPROACHES – URBAN AREA

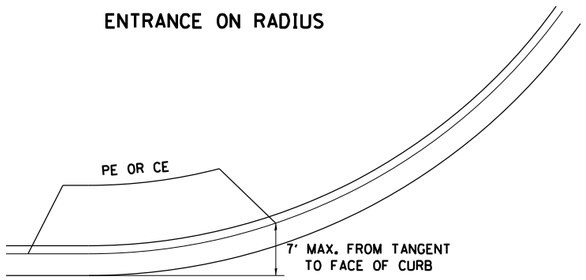

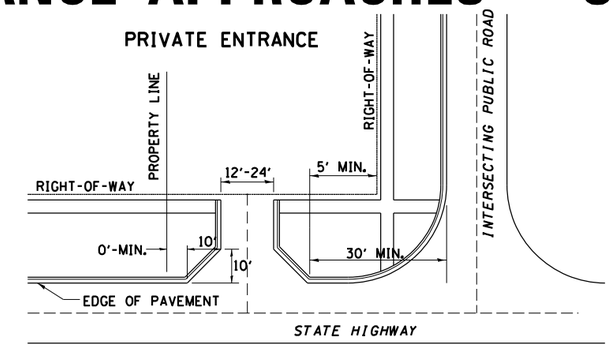

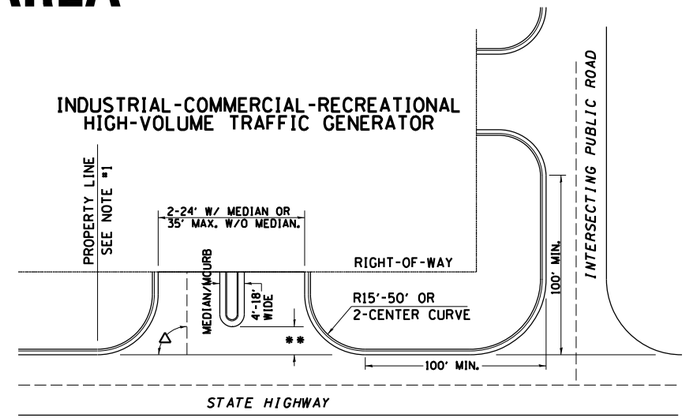

A MINIMUM OF 440 FEET SHALL BE MAINTAINED BETWEEN CENTER LINES OF ADJACENT DRIVEWAYS.
△ 90° DESIRABLE. 45° MIN. ANGLE PERMITTED ONLY FOR ONE-WAY DRIVEWAYS.
60° MIN. ANGLE FOR TWO-WAY DRIVEWAYS.

NOTE: #1 ENCROACHMENT ON THE ADJACENT PROPERTY OWNER LAND REQUIRES HIS OR HER WRITTEN APPROVAL.

** 4'-10' IF HIGHWAY CURBED.
AT EDGE OF SHOULDER IF HIGHWAY UNCURBED.

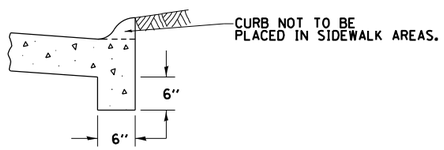

SEC B-B

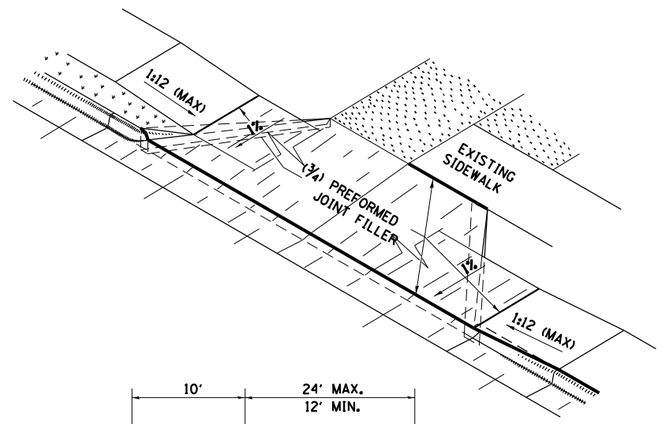

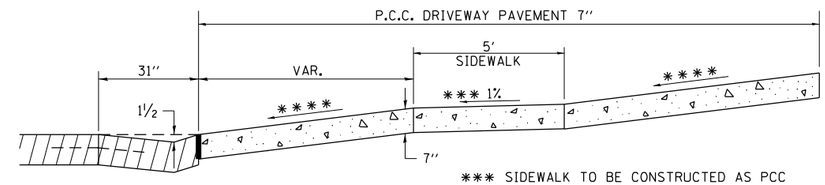

*** SIDEWALK TO BE CONSTRUCTED AS PCC DRIVEWAY PAVEMENT 7" THROUGH THE WIDTH OF THE DRIVEWAY. SEE DIST. STD. 35.4

ASCENDING APPROACH

**** 4.0% DESIRABLE
6.0% MAX. COMMERCIAL
8.0% MAX. NON-COMMERCIAL

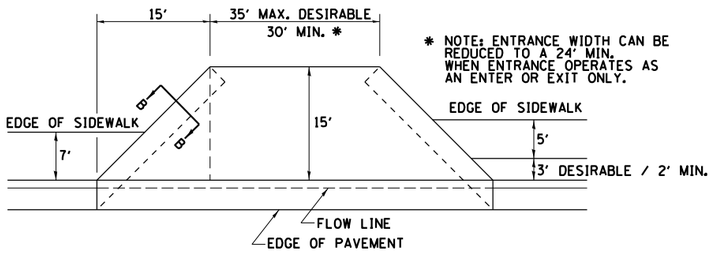

LOW TO MODERATE VOLUME COMMERCIAL ENTRANCE

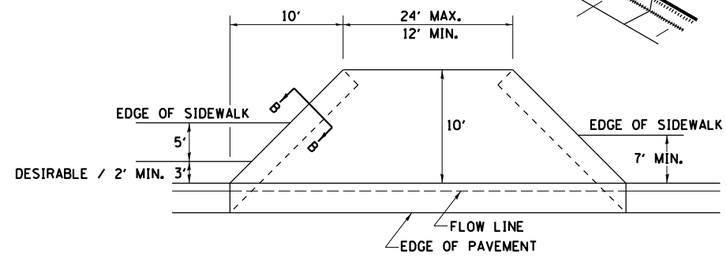

PRIVATE ENTRANCE

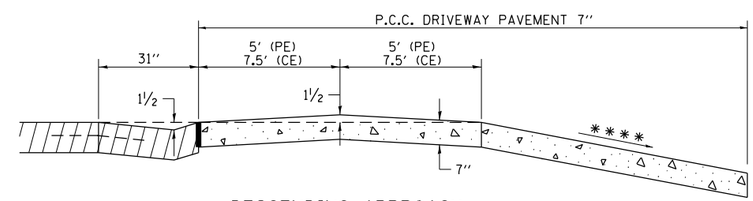

DESCENDING APPROACH
(NO SIDEWALK)

NOTE: CURVED ENTRANCE RETURNS MAY BE USED FOR LOW TO MODERATE VOLUME LOCATIONS WITH REVIEW ON A CASE-BY-CASE BASIS.

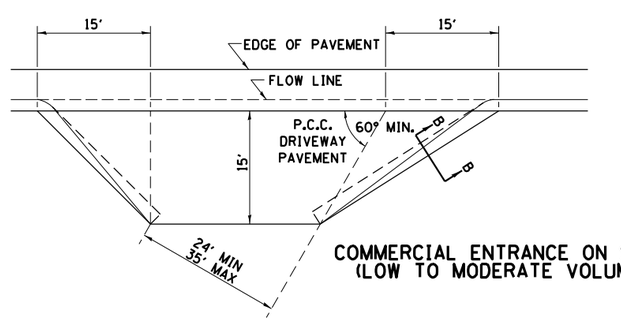

COMMERCIAL ENTRANCE ON SKEW
(LOW TO MODERATE VOLUME)

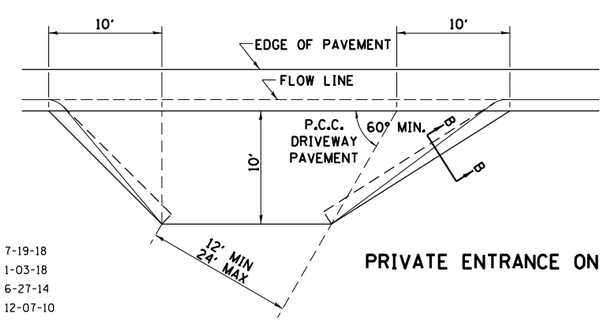

PRIVATE ENTRANCE ON SKEW

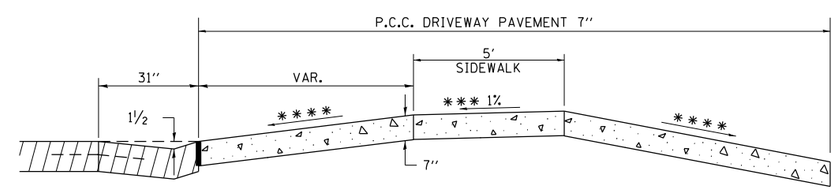

DESCENDING APPROACH
(WITH SIDEWALK)

REVISED - 7-19-18
REVISED - 1-03-18
REVISED - 6-27-14
REVISED - 12-07-10

ENTRANCE APPROACHES – URBAN AREA

25.1

MODEL: Default
FILE NAME: S:\PROJECTS\2010\1095D10_IDOT PTB155Item29 Galena_US 20\DESIGN\TRANS\DETAILS.dgn

WILLETT HOFMANN & ASSOCIATES INC
ENGINEERING ARCHITECTURE LAND SURVEYING
809 EAST 2ND STREET, DIXON, IL 61021-0362
P: (815) 284-3300 DESIGN FIRM: #184-000916

USER NAME = mslick	DESIGNED - AMF	REVISED -	
	DRAWN - TJA	REVISED -	
PLOT SCALE = 480.0000 ' / IL.	CHECKED - GFS	REVISED -	
PLOT DATE = 10/15/2021	DATE - 5/22/20	REVISED -	

STATE OF ILLINOIS
DEPARTMENT OF TRANSPORTATION

IL RTE 84 / US 20
REGION 2 / DISTRICT 2 STANDARDS

SHEET 20 OF 36 SHEETS

F.A.P. RTE.	SECTION	COUNTY	TOTAL SHEETS	SHEET NO.
301	29R-1	JO DAVIESS	679	390
		CONTRACT NO. 64880		
		ILLINOIS	FED. AID PROJECT	

SEWER AND WATER MAIN CROSSINGS

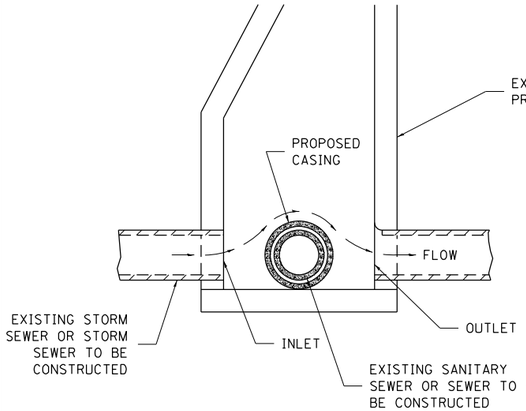

ELEVATION - ECCENTRIC

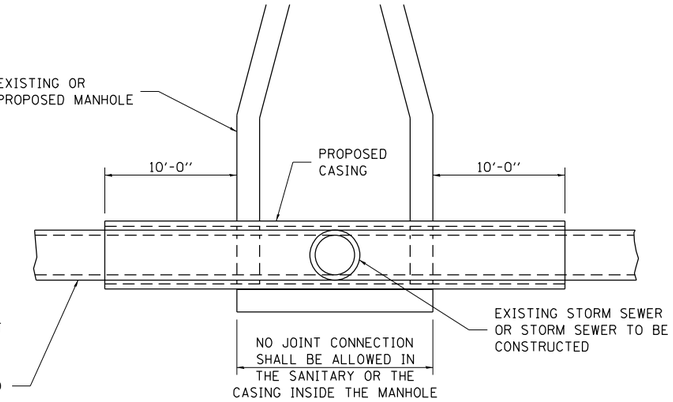

ELEVATION - CONCENTRIC

CASING SHALL BE CAST IRON WITH AN INSIDE DIAMETER 2" LARGER IN DIAMETER THAN ENCASED PIPE OUTSIDE DIAMETER WITH BOTH ENDS OF CASING SEALED

AT GRADE CROSSING OF SANITARY AND STORM SEWER

ALL DIMENSIONS ARE IN INCHES UNLESS OTHERWISE NOTED

THIS DETAIL IS FOR UNKNOWN UTILITIES UNLESS QUANTITIES ARE INCLUDED IN THE PLANS THE EXTRA WORK WILL BE PAID FOR IN ACCORDANCE WITH ARTICLE 109.04.

WHEN PROPOSED SEWER (OR WATER) IS LOCATED 10'-0" OR MORE FROM EXISTING WATER (OR SEWER) NO SPECIAL CONSTRUCTION REQUIRED.

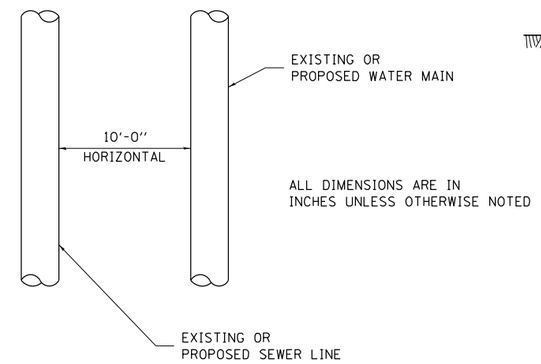

ALL DIMENSIONS ARE IN INCHES UNLESS OTHERWISE NOTED

PLAN VIEW

WHEN PROPOSED SEWER (OR WATER) IS LOCATED LESS THAN 10'-0" FROM EXISTING WATER (OR SEWER) DETAILS BELOW SHALL APPLY.

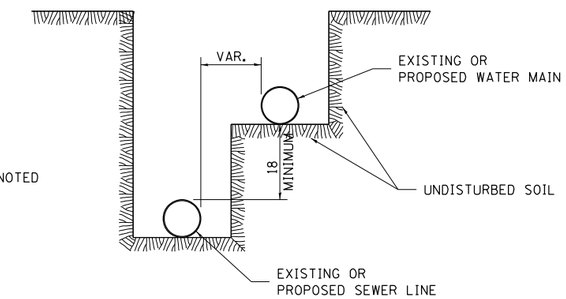

WATER AND SEWER HORIZONTAL SEPARATION REQUIREMENTS

POINT LOADS SHALL NOT BE ALLOWED BETWEEN SEWER OR SEWER CASING AND WATER MAIN

PROVIDE ADEQUATE SUPPORT FOR EXISTING WATER MAIN TO PREVENT DAMAGE DUE TO SETTLEMENT OF SEWER TRENCH

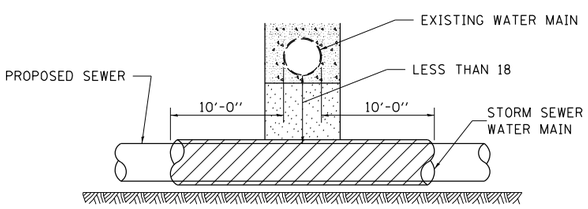

PROVIDE ADEQUATE SUPPORT FOR EXISTING WATER MAIN TO PREVENT DAMAGE DUE TO SETTLEMENT OF SEWER TRENCH

MAINTAIN 18 MINIMUM VERTICAL SEPARATION FOR 10 FT. HORIZONTALLY

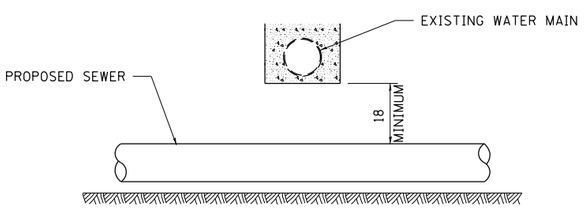

ALL DIMENSIONS ARE IN INCHES UNLESS OTHERWISE NOTED

PROPOSED SEWER LINE BELOW EXISTING WATER MAIN

PROVIDE ADEQUATE SUPPORT FOR EXISTING SEWER LINE TO PREVENT DAMAGE DUE TO SETTLEMENT

PLACE TRENCH BACKFILL FOR 10 FT. ON EITHER SIDE OF SEWER LINE

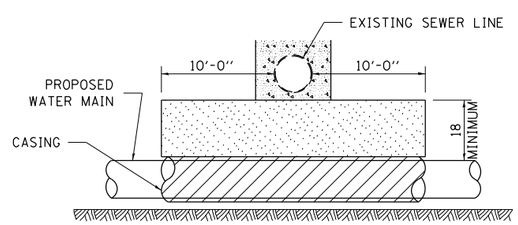

CASING SHALL BE CAST IRON WITH AN INSIDE DIAMETER 2" LARGER IN DIAMETER THAN ENCASED PIPE OUTSIDE DIAMETER WITH BOTH ENDS OF CASING SEALED

PROVIDE ADEQUATE SUPPORT FOR EXISTING WATER MAIN TO PREVENT DAMAGE DUE TO SETTLEMENT OF SEWER TRENCH

MAINTAIN 18 MINIMUM VERTICAL SEPARATION FOR 10 FT. HORIZONTALLY

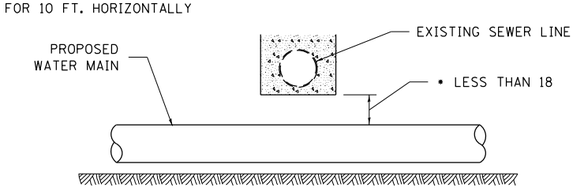

• NOT ALLOWED
MUST MAINTAIN 18 VERTICAL SEPARATION

ALL DIMENSIONS ARE IN INCHES UNLESS OTHERWISE NOTED

PROPOSED WATER MAIN BELOW EXISTING SEWER LINE

POINT LOADS SHALL NOT BE ALLOWED BETWEEN WATER MAIN OR WATER MAIN CASING AND SEWER

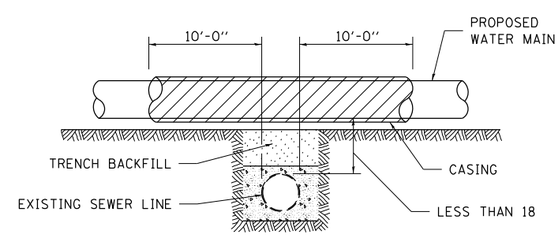

CASING SHALL BE CAST IRON WITH AN INSIDE DIAMETER 2" LARGER IN DIAMETER THAN ENCASED PIPE OUTSIDE DIAMETER WITH BOTH ENDS OF CASING SEALED

ALL DIMENSIONS ARE IN INCHES UNLESS OTHERWISE NOTED

PROPOSED WATER MAIN ABOVE EXISTING SEWER LINE

REVISED - 10-17-11

PROVIDE ADEQUATE SUPPORT FOR SEWER TO PREVENT SETTLING AND BREAKING THE WATER MAIN.

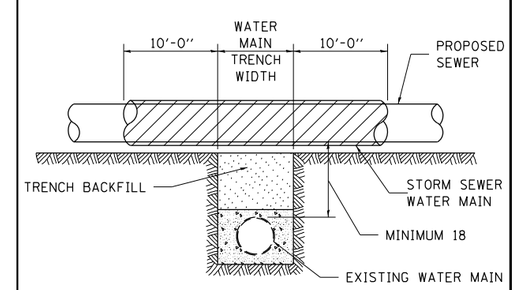

ALL DIMENSIONS ARE IN INCHES UNLESS OTHERWISE NOTED

EXISTING WATER MAIN BELOW PROPOSED SEWER LINE WITH MINIMUM 18 VERTICAL SEPARATION

SEWER AND WATER MAIN CROSSINGS 32.1

MODEL: Default
FILE NAME: S:\PROJECTS\2010\1095D10_IDOT_PTB155Item39_Galena_US_20\DESIGN\TRANS\DETAILS.dgn

WILLETT HOFMANN & ASSOCIATES INC
ENGINEERING ARCHITECTURE LAND SURVEYING
809 EAST 2ND STREET, DIXON, IL 61021-0362
P: (815) 284-3300 DESIGN FIRM: #184-000916

USER NAME = mslick	DESIGNED - AMF	REVISED -	
	DRAWN - TJA	REVISED -	
PLOT SCALE = 480.0000 ' / in.	CHECKED - GFS	REVISED -	
PLOT DATE = 10/15/2021	DATE - 5/22/20	REVISED -	

STATE OF ILLINOIS
DEPARTMENT OF TRANSPORTATION

IL RTE 84 / US 20
REGION 2 / DISTRICT 2 STANDARDS

SHEET 21 OF 36 SHEETS

F.A.P. RTE.	SECTION	COUNTY	TOTAL SHEETS	SHEET NO.
301	29R-1	JO DAVIESS	679	391
		CONTRACT NO. 64880		
		ILLINOIS	FED. AID PROJECT	

CONCRETE COLLARS FOR PIPE OR BOX CULVERT EXTENSIONS

Bill of Materials

	h bar	U bar dimensions				U_1 bar dimensions				REINF. BARS	EXPANSION BOLTS ¾"	CONCRETE COLLAR
	Quantity	X	Y	Length	Quantity	X	Z	Length	Quantity	LBS	EACH	Cu. Yds.
12" PIPE 472	2	1'-9"	1'-6"	4'-9"	4					15		0.43
12" PIPE 472A	2	1'-9"	1'-6"	4'-9"	4					15		0.43
1235+57 18"TEMP	3					2'-2"	1'-9"	5'-8"	4	18	4	0.50
12" PIPE 230	2	1'-9"	1'-6"	4'-9"	4					15		0.43
30" PIPE 434	4	3'-2"	2'-3"	7'-8"	4					21		0.90
									Total	84	4	2.70

All h bars 18 Long

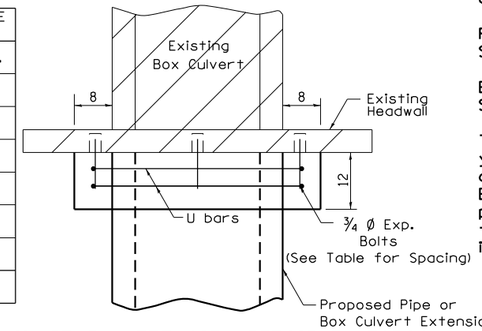

PLAN OF CULVERT WITH STRAIGHT HEADWALL

General Notes

Concrete Collars shall be constructed of Class SI Concrete in accordance with Section 503 of the Standard Specifications

Reinforcement bars shall conform to Section 508 of the Standard Specifications.

Expansion bolts shall be 3/4 Ø hooked bolts and shall conform to Section 540 of the Standard Specifications.

The concrete will be paid for at the contract unit price per cubic yard for CONCRETE COLLAR. Reinforcement will be paid for at the contract unit price per pound for REINFORCEMENT BARS. Expansion Bolts, when required, will be paid for at the contract unit price each for EXPANSION BOLTS ¾ inch, which price shall include furnishing, drilling holes, and installing the expansion bolts complete in place. These bolts shall extend at least 9 inches into the new concrete.

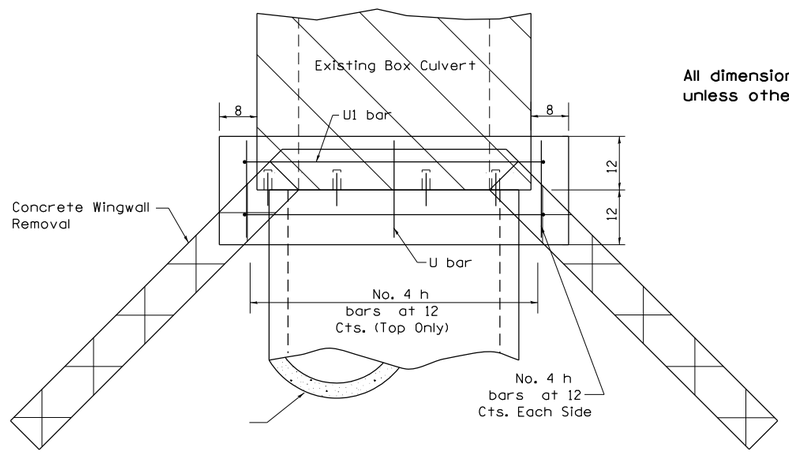

PLAN OF CULVERT WITH ANGLED WING WALLS

All dimensions are in inches unless otherwise noted.

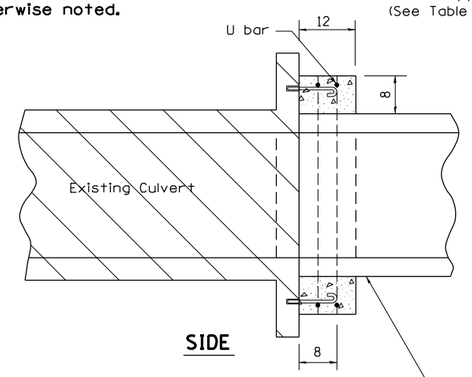

SIDE

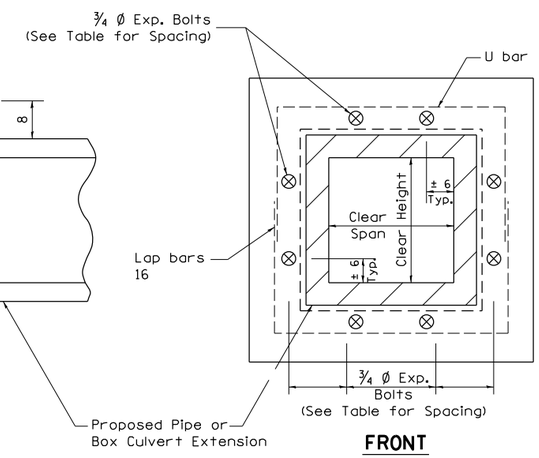

FRONT

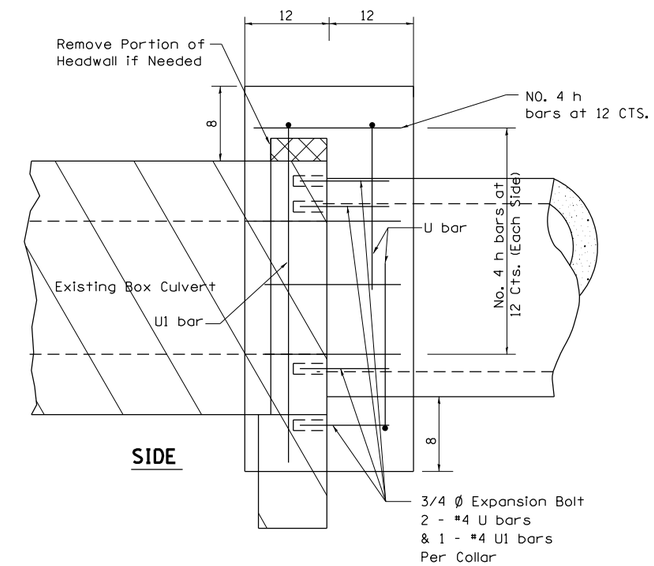

SIDE

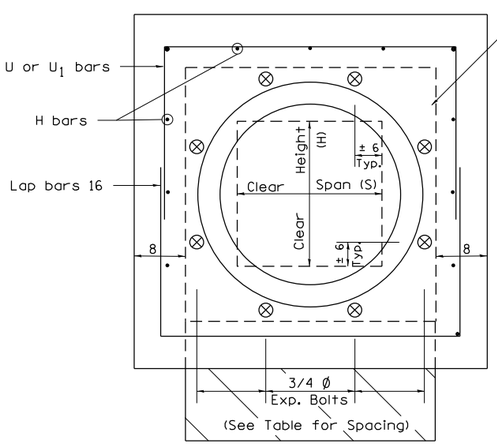

FRONT

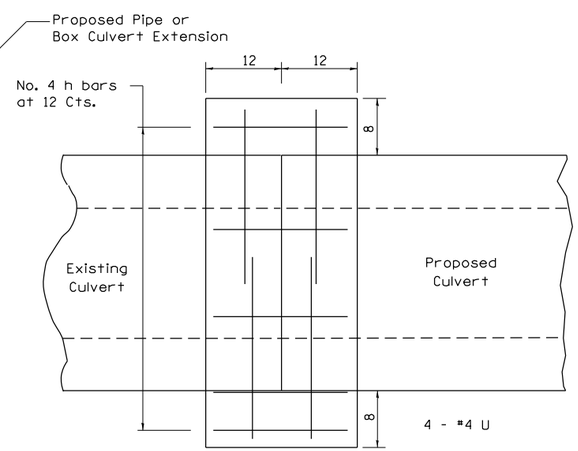

CULVERT CONNECTION WITHOUT EXISTING HEADWALL

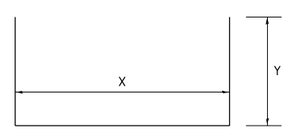

(#4) U bar

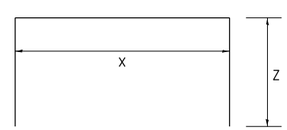

(#4) U_1 bar

PLACEMENT DETAILS FOR EXPANSION BOLTS

H or S	NUMBER OF EXPANSION BOLTS REQUIRED PER SIDE			
	EXTENSIONS ≤ 15'		EXTENSIONS > 15'	
	NUMBER *	SPACING	NUMBER *	SPACING
24	**	**	**	**
30	2	18	2	18
36	2	24	2	24
48	3	18	3	18
60	4	16	3	24
72	5	15	4	20
84	5	18	4	24
96	6	17	5	21
108	6	19	5	24
120	7	18	6	21
132	8	17	6	24
144	8	19	7	22

* Expansion bolts based on non-skewed culverts
** Minimum one expansion bolt at each corner

Example:
6' x 4' box culvert to be extended 18' at one end only.

From table find
6' side requires 4 - ¾" Ø expansion bolts at 20" cts.
4' side requires 3 - ¾" Ø expansion bolts at 18" cts.

Total Number required
(4+3)2 = 14 - ¾" Ø expansion bolts.

REVISED - 1-18-17
REVISED - 1-05-16
REVISED - 6-27-14
REVISED - 10-17-11

CONCRETE COLLARS FOR PIPE OR BOX CULVERT EXTENSIONS 33.1

MODEL: Default
FILE NAME: S:\PROJECTS\2010\109D10_IDOT_PTB155\Item29-Galena_US-20\DESIGN\TRANS\DETAILS.dgn

WILLETT HOFMANN & ASSOCIATES INC
ENGINEERING ARCHITECTURE LAND SURVEYING
809 EAST 2ND STREET, DIXON, IL 61021-0367
T: 815-284-3300 DESIGN FIRM: 184-000112

USER NAME = mslick	DESIGNED - AMF	REVISED -	
	DRAWN - TJA	REVISED -	
PLOT SCALE = 480.0000 ' / ft.	CHECKED - GFS	REVISED -	
PLOT DATE = 10/15/2021	DATE - 5/22/20	REVISED -	

STATE OF ILLINOIS
DEPARTMENT OF TRANSPORTATION

IL RTE 84 / US 20
REGION 2 / DISTRICT 2 STANDARDS

SHEET 22 OF 36 SHEETS

F.A.P. RTE.	SECTION	COUNTY	TOTAL SHEETS	SHEET NO.
301	29R-1	JO DAVIESS	679	392
		CONTRACT NO. 64880		
		ILLINOIS	FED. AID PROJECT	

WORK ZONE SIGN DETAILS

ILLINOIS STANDARD G20–I100

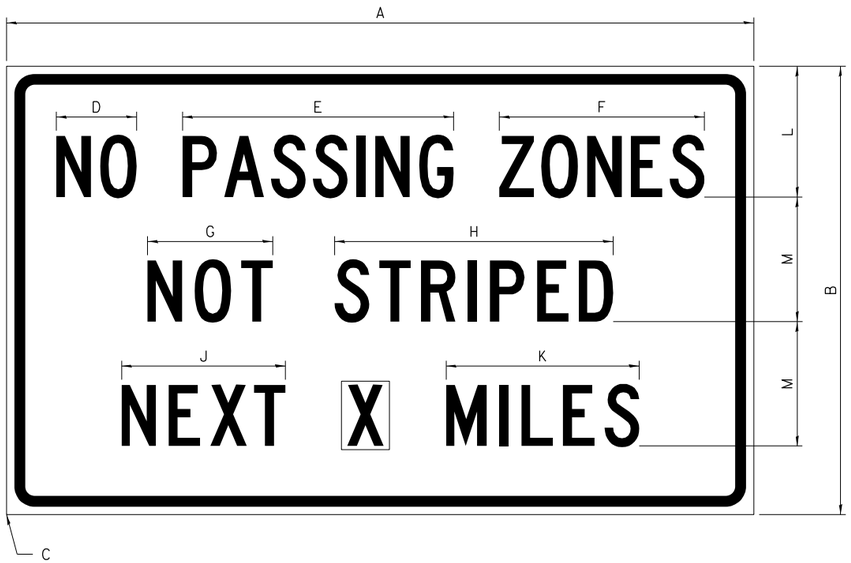

COLOR	LEGEND AND BORDER	BLACK	NON-REFLECTORIZED
	BACKGROUND	ORANGE	REFLECTORIZED

SIGN SIZE	DIMENSIONS											
	A	B	C	D	E	F	G	H	J	K	L	M
60 x 36	60.00	36.00	2.25	6.4	21.80	16.40	10.00	22.40	13.20	15.50	10.50	10.00

SIGN SIZE	SERIES BY LINE			MARGIN	BORDER
	1	2	3		
60 x 36	5C	5C	5C	0.625	0.875

Sign not to scale

ILLINOIS STANDARD W8–I107

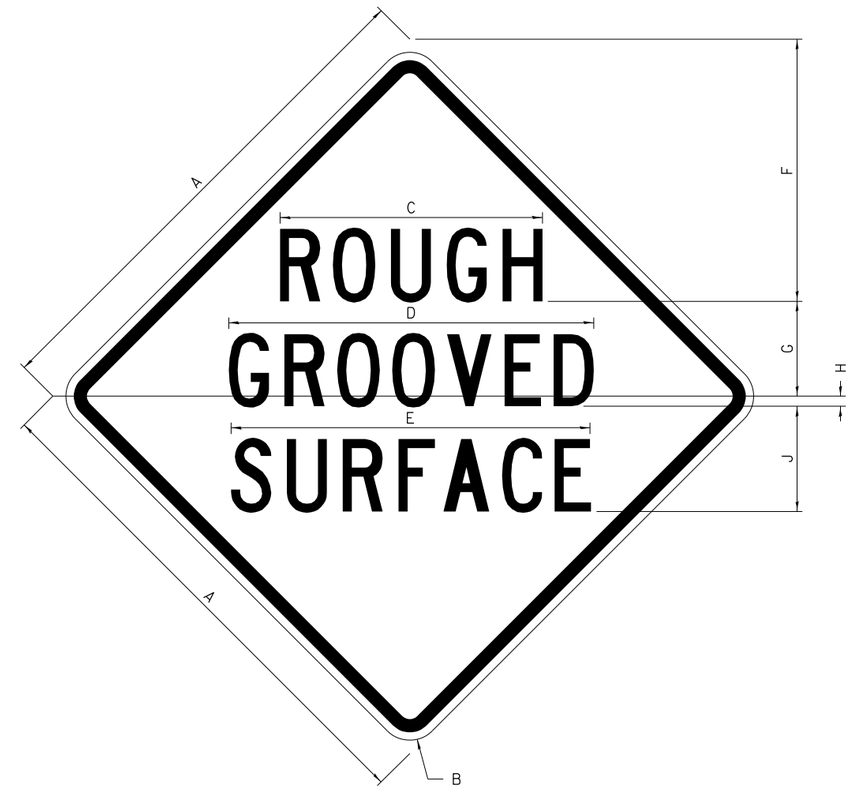

COLOR	LEGEND AND BORDER	BLACK	NON-REFLECTORIZED
	BACKGROUND	ORANGE	REFLECTORIZED

SIGN SIZE	DIMENSIONS								
	A	B	C	D	E	F	G	H	J
48 x 48	48.00	3.00	25.00	34.80	34.20	24.94	9.00	1.00	10.00

SIGN SIZE	SERIES BY LINE			MARGIN	BORDER
	1	2	3		
48 x 48	7C	7C	7C	1.250	0.750

Sign not to scale

GENERAL NOTES

All work to furnish and install these signs shall be included in the cost of the specified traffic control standards and shall not be paid separately.

All Illinois Standard signs shall conform to the latest edition of the "Illinois Standard Highway Signs Book" in effect on the date of invitation for bids.

Signs shall meet the applicable portions of Sections 701 and 720 of the Standard Specifications.

All dimensions are in inches unless otherwise noted.

REVISED - 3-02-16

WORK ZONE SIGN DETAILS **SHEET 1 OF 4** **34.1**

WORK ZONE SIGN DETAILS

ILLINOIS STANDARD W12–I102

(1)

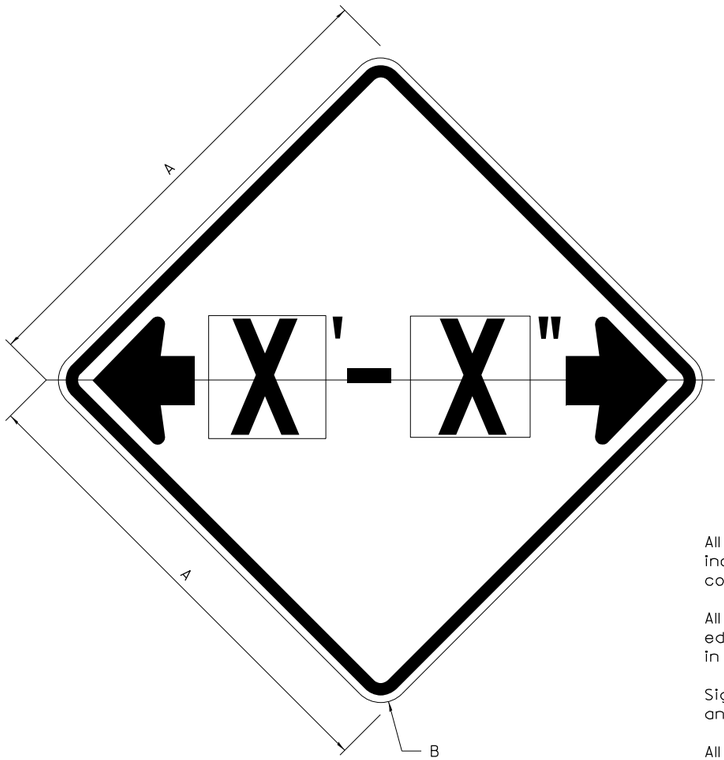

COLOR			
	LEGEND AND BORDER	BLACK	NON-REFLECTORIZED
	BACKGROUND	FL ORANGE	REFLECTORIZED

SIGN SIZE	DIMENSIONS	
	A	B
48 x 48	48.00	3.00

(1) Illinois Standard signs W12-I102 and W12-I103 shall be used as described in the special provisions.

SIGN SIZE	SERIES BY LINE	MARGIN	BORDER
	1		
48 x 48	12C	0.750	1.250

Sign not to scale

GENERAL NOTES

All work to furnish and install these signs shall be included in the cost of the specified traffic control standards and shall not be paid separately.

All Illinois Standard signs shall conform to the latest edition of the "Illinois Standard Highway Signs Book" in effect on the date of invitation for bids.

Signs shall meet the applicable portions of Sections 701 and 720 of the Standard Specifications.

All dimensions are in inches unless otherwise noted.

ILLINOIS STANDARD W12–I103

(1)

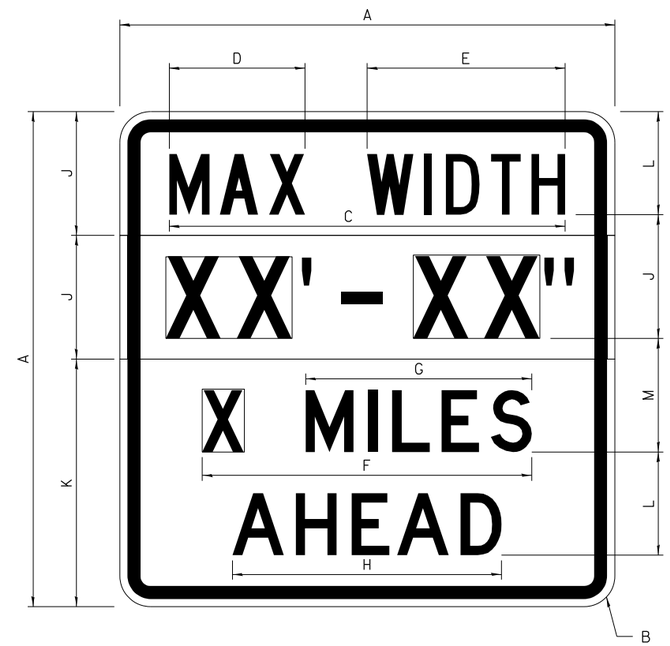

COLOR			
	LEGEND AND BORDER	BLACK	NON-REFLECTORIZED
	BACKGROUND	WHITE	REFLECTORIZED
	BACKGROUND (WIDTH)	FL ORANGE	REFLECTORIZED

SIGN SIZE	DIMENSIONS											
	A	B	C	D	E	F	G	H	J	K	L	M
48 x 48	48.00	3.00	38.40	13.20	19.20	32.00	22.00	26.20	12.00	24.00	10.00	11.00

SIGN SIZE	SERIES BY LINE				MARGIN	BORDER
	1	2	3	4		
48 x 48	6C	8D	6D	6D	0.750	1.250

Sign not to scale

XX'-XX" WIDTH AND X MILES ARE VARIABLE
TOP AND BOTTOM OF BACKGROUND WHITE

REVISED - 3-02-16

WORK ZONE SIGN DETAILS
SHEET 2 OF 4 34.1

WILLETT HOFMANN & ASSOCIATES INC
ENGINEERING ARCHITECTURE LAND SURVEYING
899 EAST 2ND STREET, DIXON, IL 61021-0367
P 815-284-3300 DESIGN FIRM #184-000710

USER NAME = mslick	DESIGNED - AMF	REVISED -	
	DRAWN - TJA	REVISED -	
PLOT SCALE = 480.0000 ' / ft.	CHECKED - GFS	REVISED -	
PLOT DATE = 10/15/2021	DATE - 5/22/20	REVISED -	

STATE OF ILLINOIS
DEPARTMENT OF TRANSPORTATION

IL RTE 84 / US 20
REGION 2 / DISTRICT 2 STANDARDS

SHEET 24 OF 36 SHEETS

F.A.P. RTE.	SECTION	COUNTY	TOTAL SHEETS	SHEET NO.
301	29R-1	JO DAVIESS	679	394
		CONTRACT NO. 64880		
		ILLINOIS	FED. AID PROJECT	

MODEL: Default
FILE NAME: S:\PROJECTS\2010\1095D10_IDOT_PTB155Item29 Galena_US 20\DESIGN\TRANS\DETAILS.dgn

WORK ZONE SIGN DETAILS

ROAD CLOSED TO OVERSIZED LOADS

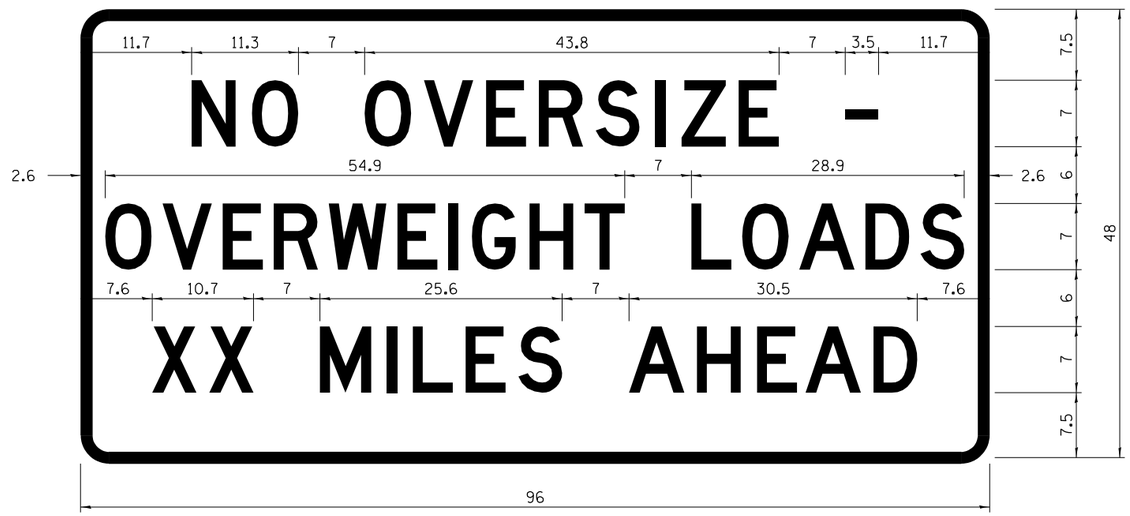

COLOR			
	LEGEND AND BORDER	BLACK	NON-REFLECTORIZED
	BACKGROUND	ORANGE	REFLECTORIZED

Permit Loads - Loads Over 13 Feet; 3.0" Radius, 1.3" Border;
[NO OVERSIZE -] D; [OVERWEIGHT LOADS] D 85% spacing; [XX MILES AHEAD] D;
Table of letter and object lefts.

N	O	O	V	E	R	S	I	Z	E	-	
11.7	18.1	30.0	36.2	42.8	48.4	54.4	60.7	63.5	69.5	80.8	

O	V	E	R	W	E	I	G	H	T	L	O	A	D	S	
2.6	8.6	15.0	20.4	26.2	33.4	38.8	41.3	47.4	53.2	64.5	69.9	75.9	82.9	88.7	

X	X	M	I	L	E	S	A	H	E	A	D
7.6	13.6	25.3	32.3	35.1	40.6	46.2	57.9	65.1	71.4	76.6	83.7

Sign not to scale

STOP LINE SIGN FOR TEMPORARY SIGNALS

COLOR			
	LEGEND AND BORDER	BLACK	NON-REFLECTORIZED
	BACKGROUND	WHITE	REFLECTORIZED

SIGN SIZE	SERIES BY LINE		
	1	2	3
24 x 24	4C	4C	4C

Sign not to scale

GENERAL NOTES

All work to furnish and install these signs shall be included in the cost of the specified traffic control standards and shall not be paid separately.

All Illinois Standard signs shall conform to the latest edition of the "Illinois Standard Highway Signs Book" in effect on the date of invitation for bids.

Signs shall meet the applicable portions of Sections 701 and 720 of the Standard Specifications.

All dimensions are in inches unless otherwise noted.

REVISED - 3-02-16

WORK ZONE SIGN DETAILS SHEET 3 OF 4 34.1

MODEL: Default
FILE NAME: S:\PROJECTS\2010\0995010_IDOT_PTB115Item29_Galena_US_20\DESIGN\TRANS\DETAILS.dgn

WILLETT HOFMANN & ASSOCIATES INC
ENGINEERING ARCHITECTURE LAND SURVEYING
809 EAST 2ND STREET, DIXON, IL 61021-0367
T. 815-284-3301 DESIGN FIRM: #184-000910

USER NAME = mslick	DESIGNED - AMF	REVISED -	
	DRAWN - TJA	REVISED -	
PLOT SCALE = 480.0000 ' / in.	CHECKED - GFS	REVISED -	
PLOT DATE = 10/15/2021	DATE - 5/22/20	REVISED -	

STATE OF ILLINOIS
DEPARTMENT OF TRANSPORTATION

IL RTE 84 / US 20
REGION 2 / DISTRICT 2 STANDARDS

SHEET 25 OF 36 SHEETS

F.A.P. RTE.	SECTION	COUNTY	TOTAL SHEETS	SHEET NO.
301	29R-1	JO DAVIESS	679	395
		CONTRACT NO. 64880		
		ILLINOIS	FED. AID PROJECT	

WORK ZONE SIGN DETAILS

ENTRANCE SIGN FOR USE WITH TEMPORARY SIGNALS

(2)

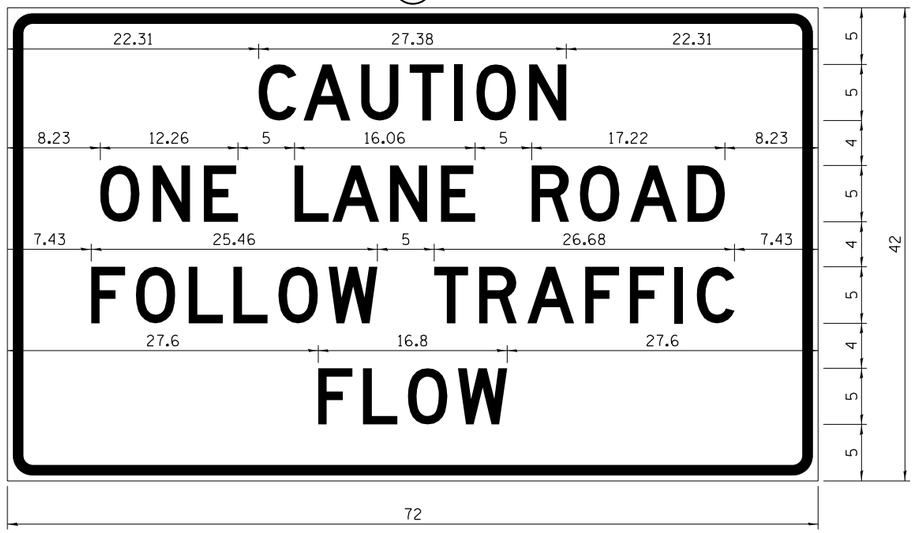

COLOR	LEGEND AND BORDER	BLACK	NON-REFLECTORIZED
	BACKGROUND	ORANGE	REFLECTORIZED

2.25" Radius, 0.88" Border, 0.50" IndenT;
[CAUTION] D; [ONE LANE ROAD] D;
[FOLLOW TRAFFIC] D; [FLOW] D

(2) This sign shall be installed at entrances located between the temporary signals as shown in the staging plans.

Table Of Widths And Spaces

22.31	C 3.36	0.62	A 4.18	0.94	U 3.36	0.94	T 3.04	0.94	I 0.78	1.17	O 3.52	1.17	N 3.36	22.31

8.23	O 3.51	1.17	N 3.36	1.18	E 3.04

5.00	L 3.05	0.31	A 4.18	0.94	N 3.36	1.17	E 3.05

5.00	R 3.36	0.93	O 3.52	0.94	A 4.18	0.93	D 3.36	8.23

7.43	F 3.04	0.94	O 3.52	1.17	L 3.04	0.94	L 3.05	0.94	O 3.51	0.94	W 4.37

5.00	T 3.05	0.94	R 3.36	0.94	A 4.18	0.93	F 3.05	0.94	F 3.04	0.94	I 0.78	1.18	C 3.35	7.43

27.60	F 3.05	0.94	L 3.04	0.94	O 3.52	0.93	W 4.38	27.60

Sign not to scale

GENERAL NOTES

All work to furnish and install these signs shall be included in the cost of the specified traffic control standards and shall not be paid separately.

All Illinois Standard signs shall conform to the latest edition of the "Illinois Standard Highway Signs Book" in effect on the date of invitation for bids.

Signs shall meet the applicable portions of Sections 701 and 720 of the Standard Specifications.

All dimensions are in inches unless otherwise noted.

STAY IN YOUR LANE

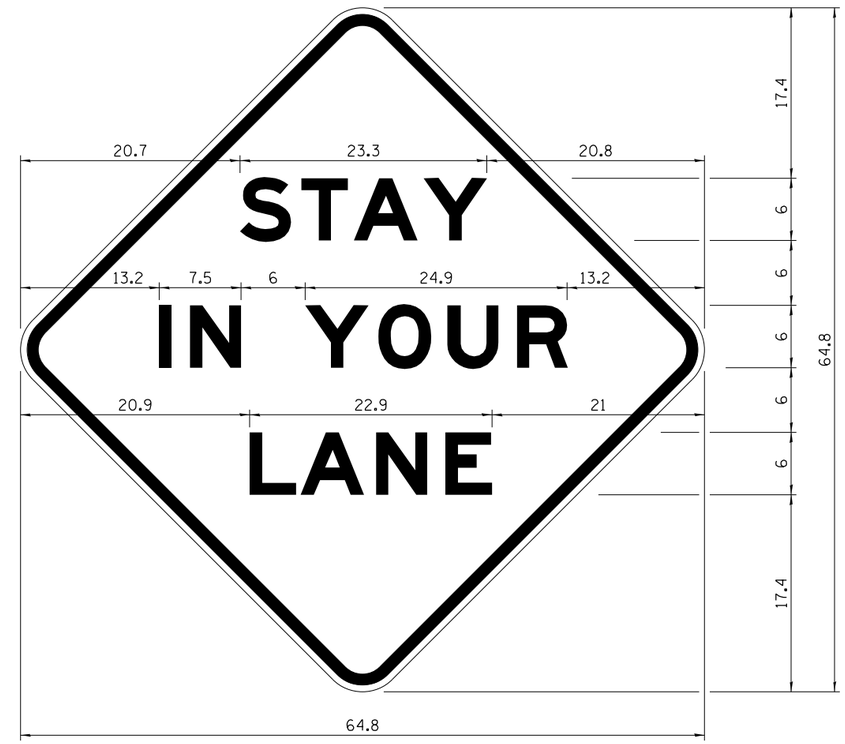

COLOR	LEGEND AND BORDER	BLACK	NON-REFLECTORIZED
	BACKGROUND	ORANGE	REFLECTORIZED

48.0" across sides 3.8" Radius, 1.0" Border, 0.6" Indent;
"STAY" E Mod; "IN YOUR" E Mod; "LANE" E Mod;

Table of Letter and Object Lefts

S 20.7	T 26.8	A 31.6	Y 38.0

I 13.2	N 15.9	Y 26.7	O 33.9	U 40.5	R 46.8

L 20.9	A 25.8	N 33.1	E 39.4

Sign not to scale

REVISED - 3-02-16

WORK ZONE SIGN DETAILS
SHEET 4 OF 4 34.1

MODEL: Default
FILE NAME: S:\PROJECTS\2010\0995010_IDOT_PTB115Item29_Galena_US_20\DESIGN\TRANS\DETAILS.dgn

WILLETT HOFMANN & ASSOCIATES INC
ENGINEERING ARCHITECTURE LAND SURVEYING
809 EAST 2ND STREET, DIXON, IL 61021-0367
T 815-284-3301 DESIGN FIRM: 184-000710

USER NAME = mslick	DESIGNED - AMF	REVISED -	
	DRAWN - TJA	REVISED -	
PLOT SCALE = 480.0000 ' / in.	CHECKED - GFS	REVISED -	
PLOT DATE = 10/15/2021	DATE - 5/22/20	REVISED -	

STATE OF ILLINOIS
DEPARTMENT OF TRANSPORTATION

IL RTE 84 / US 20
REGION 2 / DISTRICT 2 STANDARDS

SHEET 26 OF 36 SHEETS

F.A.P. RTE.	SECTION	COUNTY	TOTAL SHEETS	SHEET NO.
301	29R-1	JO DAVIESS	679	396
		CONTRACT NO. 64880		
		ILLINOIS	FED. AID PROJECT	

TRAFFIC CONTROL FOR THREE LANE SECTION

CASE 1

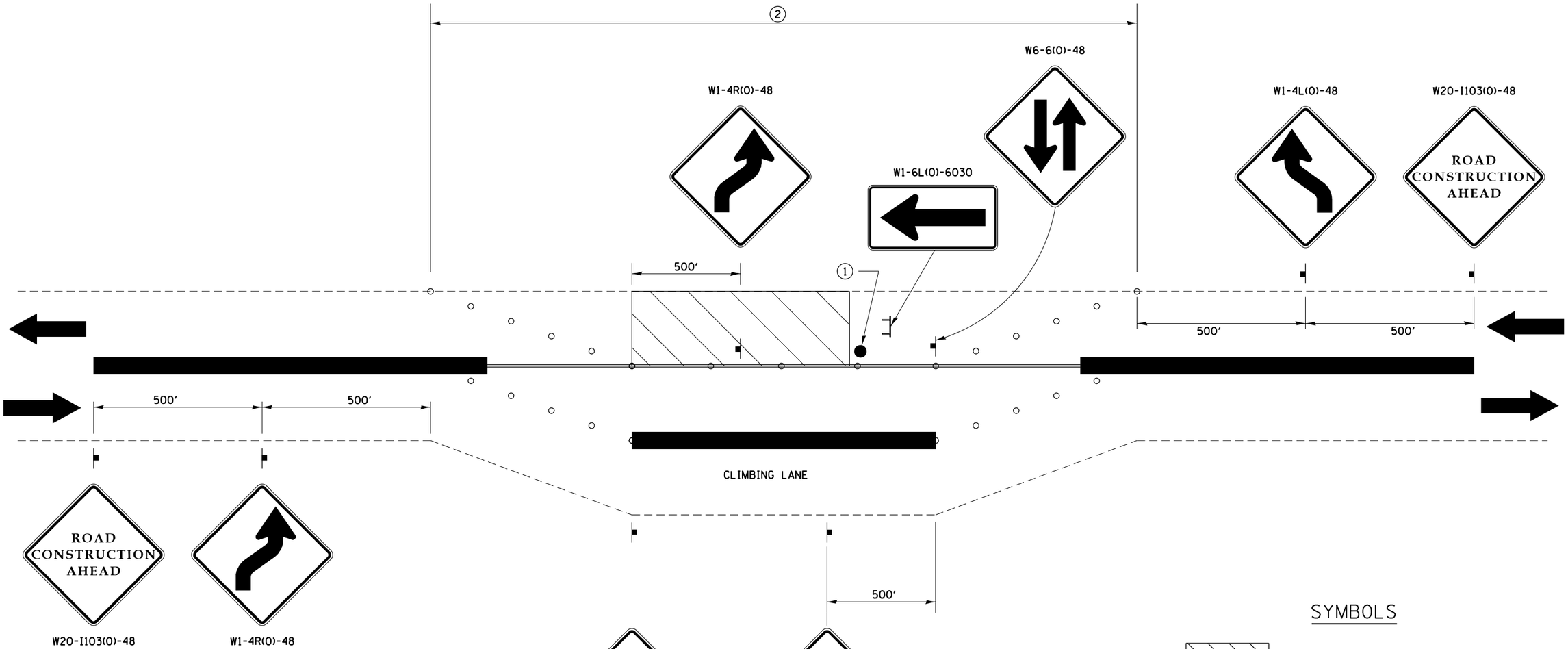

1. Use flagger and flagger signs only when flagger is required per Article 701.13(b).
2. Cones at 20' centers for 250'. Additional cones may be placed at 40' centers. When drums or type I or II barricades are used, the interval between devices may be doubled.

SYMBOLS

- WORK AREA
- SIGN
- FLAGGER WITH TRAFFIC CONTROL SIGN
- CONE, DRUM OR BARRICADE
- TYPE III BARRICADE

REVISED - 1-05-16
REVISED - 8-27-13
REVISED - 7-30-13

TRAFFIC CONTROL FOR THREE LANE SECTION **SHEET 1 OF 4** **37.1**

THIS TRAFFIC CONTROL DETAIL SHALL BE INCLUDED IN THE COST OF SPECIFIED TRAFFIC CONTROL STANDARDS OR ITEMS.

MODEL: Default
FILE NAME: S:\PROJECTS\2010\109510_IDOT_PTB155\Item29 Galena US_20\DESIGN\TRANSIDETAILS.dgn

WILLETT HOFMANN & ASSOCIATES INC
ENGINEERING ARCHITECTURE LAND SURVEYING
809 EAST 2ND STREET, DIXON, IL 61021-0367
T: 815-284-3301 DESIGN FIRM: 184-000112

USER NAME = mslick	DESIGNED - AMF	REVISED -	
	DRAWN - TJA	REVISED -	
PLOT SCALE = 480.0000 ' / ft.	CHECKED - GFS	REVISED -	
PLOT DATE = 10/15/2021	DATE - 5/22/20	REVISED -	

STATE OF ILLINOIS
DEPARTMENT OF TRANSPORTATION

IL RTE 84 / US 20
REGION 2 / DISTRICT 2 STANDARDS

SHEET 27 OF 36 SHEETS

F.A.P. RTE.	SECTION	COUNTY	TOTAL SHEETS	SHEET NO.
301	29R-1	JO DAVIESS	679	397
		CONTRACT NO. 64880		
		ILLINOIS	FED. AID PROJECT	

TRAFFIC CONTROL FOR THREE LANE SECTION

CASE 2

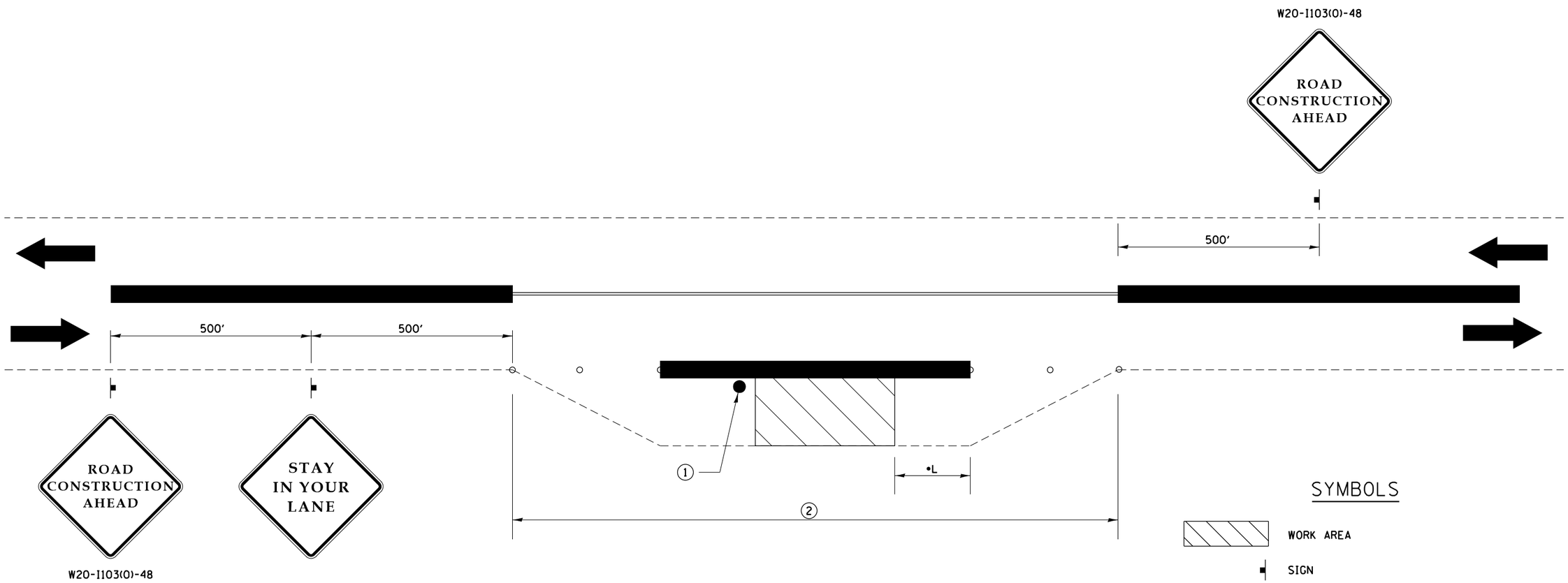

SYMBOLS

- WORK AREA
- SIGN
- FLAGGER WITH TRAFFIC CONTROL SIGN
- CONE, DRUM OR BARRICADE

1. Use flagger and flagger signs only when flagger is required per Article 701.13(b).
2. Cones at 20' centers for 250'. Additional cones may be placed at 40' centers. When drums or type I or II barricades are used, the interval between devices may be doubled.

THIS TRAFFIC CONTROL DETAIL SHALL BE INCLUDED IN THE COST OF SPECIFIED TRAFFIC CONTROL STANDARDS OR ITEMS.

* IF THE WORK ENDS WITHIN 2500 FEET OF THE TRANSITION WHEN THE SPEED IS > 40 MPH OR 1500 FEET FOR ALL OTHER SPEEDS, THE CLIMBING LANE SHALL REMAIN CLOSED AS SHOWN.

REVISED - 1-05-16
REVISED - 8-27-13
REVISED - 7-30-13

TRAFFIC CONTROL FOR THREE LANE SECTION **SHEET 2 OF 4** **37.1**

MODEL: Default
FILE NAME: S:\PROJECTS\2010\1095010_IDOT_PTB155Item29_Collins_US_20\DESIGN\TRANS\DETAILS.dgn

WILLETT HOFMANN & ASSOCIATES INC ENGINEERING ARCHITECTURE LAND SURVEYING 809 EAST 2ND STREET, DIXON, IL 61021-0367 T. 815-284-3301 DESIGN FIRM: #184-000715	USER NAME = mslick	DESIGNED - AMF	REVISED -	STATE OF ILLINOIS DEPARTMENT OF TRANSPORTATION	IL RTE 84 / US 20 REGION 2 / DISTRICT 2 STANDARDS
		DRAWN - TJA	REVISED -		
	PLOT SCALE = 480.0000 ' / in.	CHECKED - GFS	REVISED -		
	PLOT DATE = 10/15/2021	DATE - 5/22/20	REVISED -		SHEET 28 OF 36 SHEETS

F.A.P. RTE.	SECTION	COUNTY	TOTAL SHEETS	SHEET NO.
301	29R-1	JO DAVIESS	679	398
		CONTRACT NO. 64880		
		ILLINOIS FED. AID PROJECT		

TRAFFIC CONTROL FOR THREE LANE SECTION

CASE 3

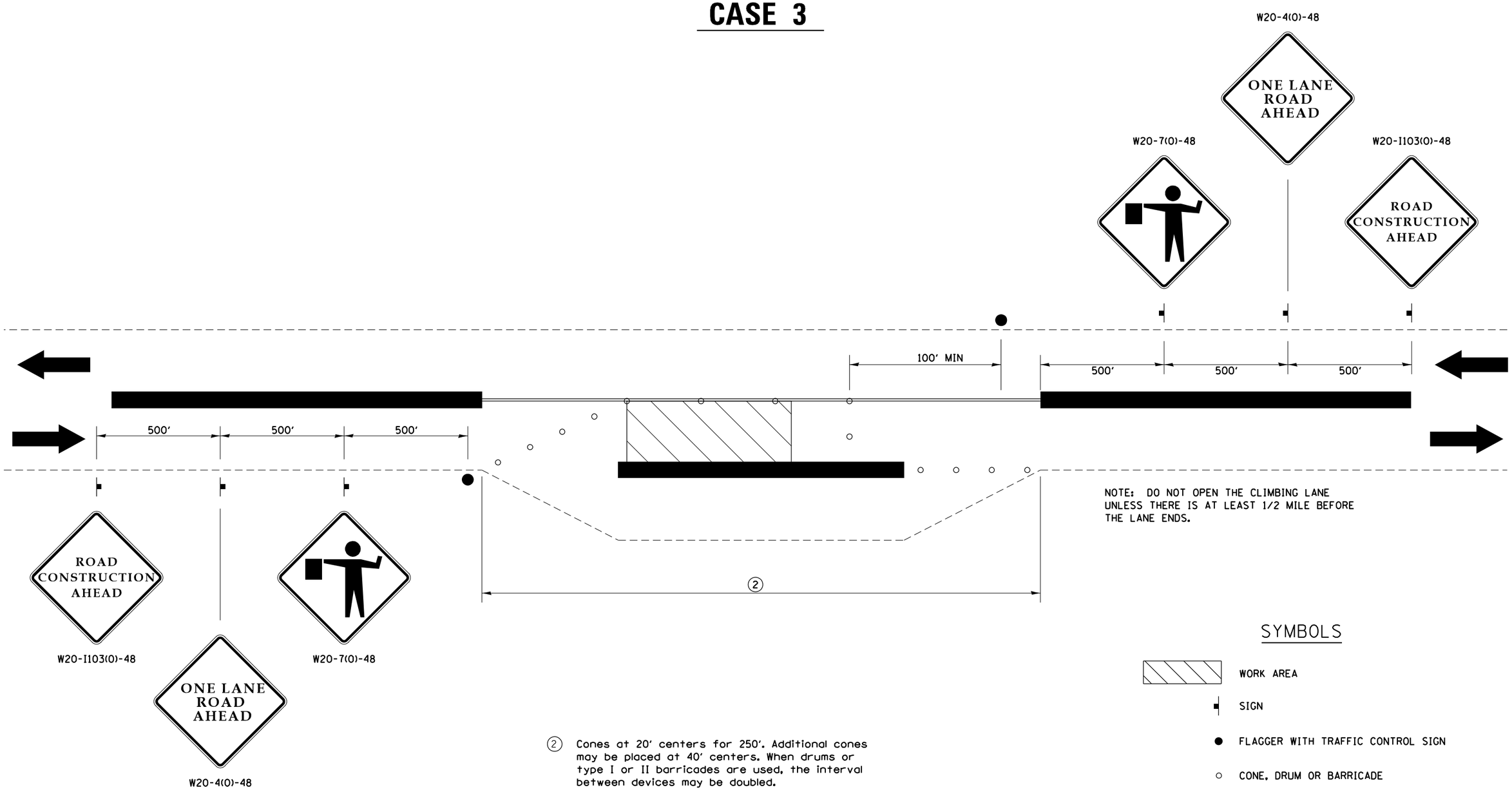

NOTE: DO NOT OPEN THE CLIMBING LANE UNLESS THERE IS AT LEAST 1/2 MILE BEFORE THE LANE ENDS.

(2) Cones at 20' centers for 250'. Additional cones may be placed at 40' centers. When drums or type I or II barricades are used, the interval between devices may be doubled.

SYMBOLS

- WORK AREA
- SIGN
- FLAGGER WITH TRAFFIC CONTROL SIGN
- CONE, DRUM OR BARRICADE

THIS TRAFFIC CONTROL DETAIL SHALL BE INCLUDED IN THE COST OF SPECIFIED TRAFFIC CONTROL STANDARDS OR ITEMS.

REVISED - 1-05-16
REVISED - 8-27-13
REVISED - 7-30-13

TRAFFIC CONTROL FOR THREE LANE SECTION **SHEET 3 OF 4** **37.1**

MODEL: Default
FILE NAME: S:\PROJECTS\2010\1095D10_IDOT_PTB155Item29_Galena_US_20\DESIGN\TRANS\DETAILS.dgn

WILLETT HOFMANN & ASSOCIATES INC ENGINEERING ARCHITECTURE LAND SURVEYING 809 EAST 2ND STREET, DIXON, IL 61021-0362 T: (815) 284-3300 DESIGN FIRM: #184-000916	USER NAME = mslick	DESIGNED - AMF	REVISED -	STATE OF ILLINOIS DEPARTMENT OF TRANSPORTATION	IL RTE 84 / US 20 REGION 2 / DISTRICT 2 STANDARDS	F.A.P. RTE.	SECTION	COUNTY	TOTAL SHEETS	SHEET NO.
		DRAWN - TJA	REVISED -			301	29R-1	JO DAVIESS	679	399
	PLOT SCALE = 480.0000 ' / IL.	CHECKED - GFS	REVISED -					CONTRACT NO. 64880		
	PLOT DATE = 10/15/2021	DATE - 5/22/20	REVISED -		SHEET 29 OF 36 SHEETS		ILLINOIS	FED. AID PROJECT		

TRAFFIC CONTROL FOR THREE LANE SECTION

CASE 4

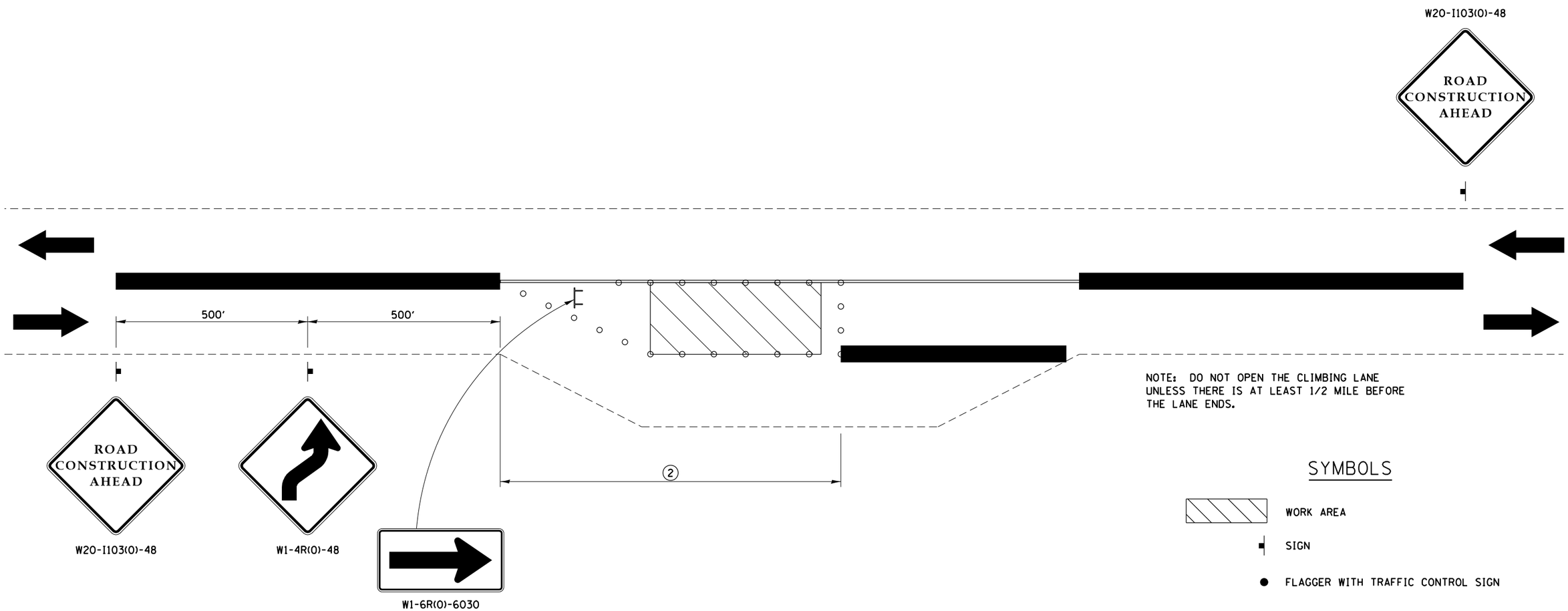

NOTE: DO NOT OPEN THE CLIMBING LANE UNLESS THERE IS AT LEAST 1/2 MILE BEFORE THE LANE ENDS.

2 Cones at 20' centers for 250'. Additional cones may be placed at 40' centers. When drums or type I or II barricades are used, the interval between devices may be doubled.

SYMBOLS

- WORK AREA
- SIGN
- FLAGGER WITH TRAFFIC CONTROL SIGN
- CONE, DRUM OR BARRICADE
- TYPE III BARRICADE

THIS TRAFFIC CONTROL DETAIL SHALL BE INCLUDED IN THE COST OF SPECIFIED TRAFFIC CONTROL STANDARDS OR ITEMS.

CASE 4 APPLIES WHEN NO WORKERS ARE PRESENT. WHEN WORKERS ARE PRESENT, TWO LANES SHALL BE CLOSED AND TRAFFIC CONTROL SHALL BE ACCORDING TO CASE 3.

REVISED - 1-05-16
REVISED - 8-27-13
REVISED - 7-30-13

TRAFFIC CONTROL FOR THREE LANE SECTION **SHEET 4 OF 4** **37.1**

MODEL: Default
FILE NAME: S:\PROJECTS\2010\095910_IDOT_PTB155Item29_Galena_US_20\DESIGN\TRANS\DETAILS.dgn

WILLETT HOFMANN & ASSOCIATES INC
ENGINEERING ARCHITECTURE LAND SURVEYING
809 EAST 2ND STREET, DIXON, IL 61021-0367
T. 815-284-3300 DESIGN FIRM: #184-000916

USER NAME = mslick	DESIGNED - AMF	REVISED -	
	DRAWN - TJA	REVISED -	
PLOT SCALE = 480.0000 ' / in.	CHECKED - GFS	REVISED -	
PLOT DATE = 10/15/2021	DATE - 5/22/20	REVISED -	

STATE OF ILLINOIS
DEPARTMENT OF TRANSPORTATION

IL RTE 84 / US 20
REGION 2 / DISTRICT 2 STANDARDS

SHEET 30 OF 36 SHEETS

F.A.P. RTE.	SECTION	COUNTY	TOTAL SHEETS	SHEET NO.
301	29R-1	JO DAVIESS	679	400
		CONTRACT NO. 64880		
		ILLINOIS	FED. AID PROJECT	