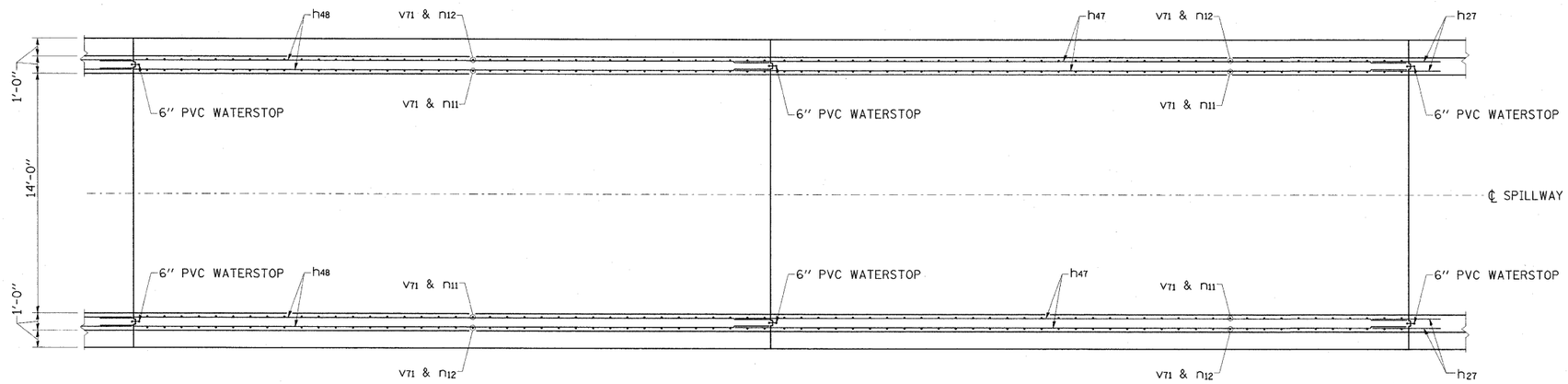

PLAN

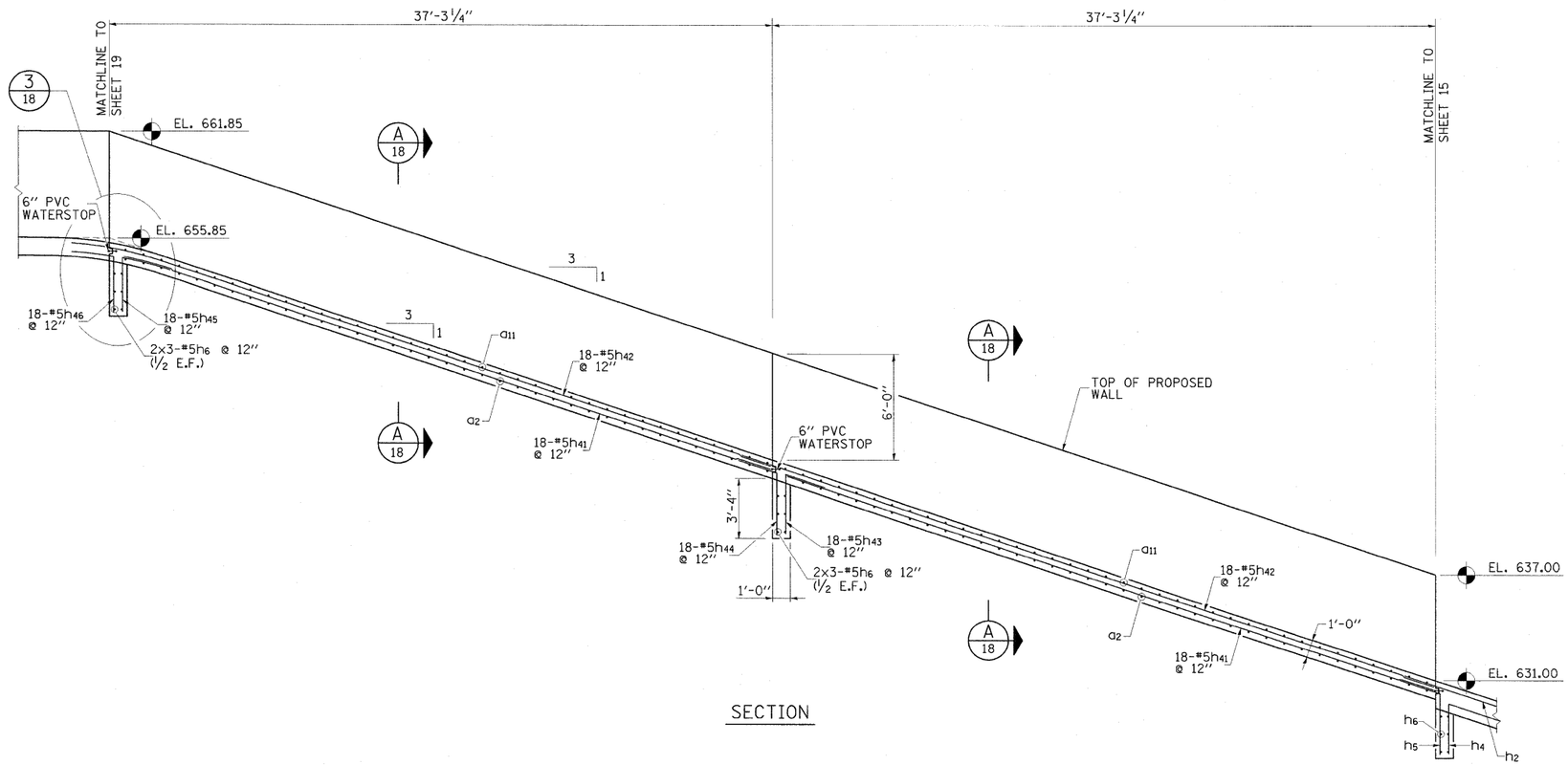

SECTION

FILE NAME = ...\Pr_Spwychute_PS&Dtls.dgn	USER NAME = Kristin Timmons	DESIGNED - KLT/JJF	REVISED -	NIEMANVILLE TRAIL MONTGOMERY COUNTY, ILLINOIS	PROPOSED SPILLWAY CHUTE PLAN & SECTION F.A.U. ROUTE 8243	F.A.U. RTE.	SECTION	COUNTY	TOTAL SHEETS	SHEET NO.
		DRAWN - GLD	REVISED -			8243	09-00134-00-DR	MONTGOMERY	32	17
	PLOT SCALE = 4.0000 ' / IN.	CHECKED - KLT/JJF	REVISED -					CONTRACT NO. 93537		
	PLOT DATE = 3/3/2010	DATE - 3/2/2010	REVISED -		SCALE: N/A / SHEET NO. 17 OF 32 SHEETS / STA. / TO STA.	FED. ROAD DIST. NO. 6	ILLINOIS	FED. AID PROJECT		