POLE ANCHOR BOLTS AND VIBRATION DAMPENERS

WHILE IT IS THE POLE MANUFACTURER'S RESPONSIBILITY TO FURNISH PROPERLY SIZED ANCHOR BOLTS, THE MINIMUM ANCHOR BOLT EMBEDMENT INTO THE CONCRETE POLE FOUNDATION SHALL BE 36". THE POLE MANUFACTURER SHALL EVALUATE THE POLE AND FOUNDATION DETAILS ON THE PLANS TO PROPERLY SIZE THE ANCHOR BOLTS, AND SHALL INCLUDE THE ANCHOR BOLTS IN THE POLE SUBMITTAL FOR REVIEW AND COMMENT. WHERE REQUIRED, THE POLE MANUFACTURER SHALL SUBMIT THE VIBRATION DAMPENERS TO BE UTILIZED WITH THE POLES WITH THE POLE SUBMITTAL FOR REVIEW AND COMMENT.

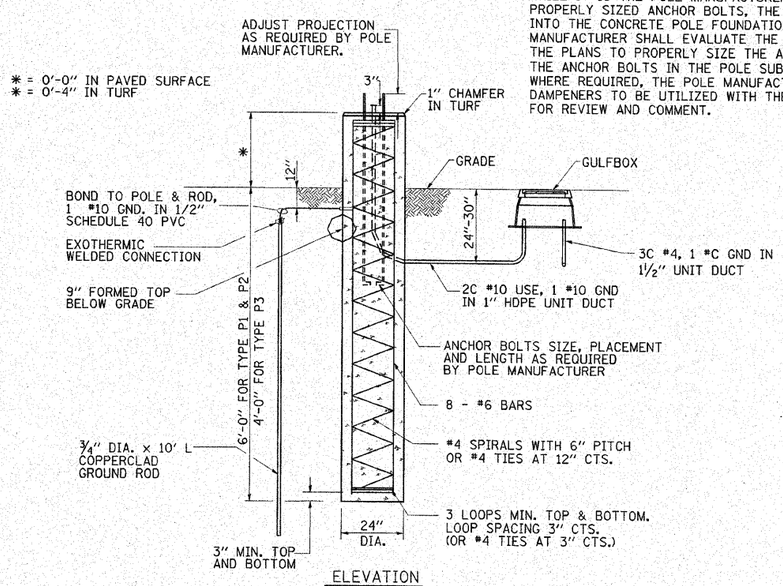

ELEVATION

P1, P2 AND P3 POLE BASE DETAIL

N.T.S.

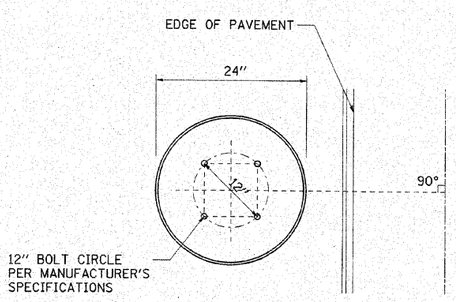

POLE BASE ANCHOR BOLT PATTERN DETAIL

N.T.S.

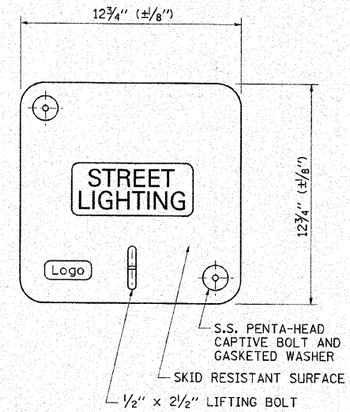

COVER

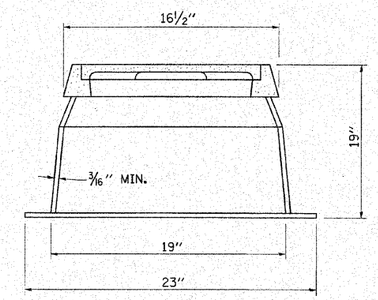

BOX SECTION

1. GULFBOX SHALL BE FIBERGLASS REINFORCED POLYMER CONCRETE AND FIBERGLASS REINFORCED POLYMER
2. COVER SHALL BE DARK GREEN IN TURFED AREAS AND COLORED TO MATCH PAVED AREAS.
3. GULFBOX SHALL HAVE THE WORDS "STREET LIGHTING" CAST INTO THE COVER.

STANDARD GULFBOX

N.T.S.

STATE OF ILLINOIS
THOMAS MEMMINGER JR
062-053744
SPRINGFIELD
LICENSED PROFESSIONAL ENGINEER

EXPIRES: 11/30/2011

THOMAS MEMMINGER
ELECTRICAL ENGINEER

10/15/2010
DATE

FILE NAME = I:\champaign\10094010\draw\cadd_sheets\Lighting_Plans_Details_C.dgn	USER NAME = Jim Michael	DESIGNED - TM	CMT CRAWFORD, MURPHY & TILLY, INC. CONSULTING ENGINEERS License No. 184-000613 ©Copyright CMT, Inc.
		DRAWN - RAH	
	PLOT SCALE = 30.0000 ' / IN.	CHECKED - JMM	
	PLOT DATE = 10/18/2010	DATE - 10/15/2010	

CITY OF CHAMPAIGN
DEPARTMENT OF PUBLIC WORKS

ROADWAY LIGHTING DETAILS
FOURTH STREET IMPROVEMENT
CHAMPAIGN, ILLINOIS

SCALE: N.T.S. | SHEET NO. C OF 333 SHEETS | STA. | TO STA.

F.A.U RTE.	SECTION	COUNTY	TOTAL SHEETS	SHEET NO.
7171	10-00285-00-SP	CHAMPAIGN	55	52

CONTRACT NO. 91445

ILLINOIS | FED. AID PROJECT