1-21-10 LETTING ITEM 091

INDEX OF SHEETS

1. TITLE SHEET
2. GENERAL NOTES AND UTILITY CONTACTS
3. SUMMARY OF QUANTITIES
4. SCHEDULES OF QUANTITIES
5. TYPICAL SECTIONS
6. ALIGNMENTS, TIES AND BENCHMARKS
7. REMOVAL PLANS
8. PLAN AND PROFILE
9. MULTI-USE PATH PLAN AND SECTION
10. MISCELLANEOUS ROADWAY DETAILS
11 - 13. EROSION CONTROL PLAN
14 - 15. DETOUR ROUTE AND ROAD CLOSURE
16 - 62. BRIDGE PLANS (INCLUDING BORING LOGS AND EXISTING DRAWINGS)
63 - 66. CROSS SECTIONS

LIST OF STANDARDS

280001-05	TEMPORARY EROSION CONTROL SYSTEMS
420401-08	BRIDGE APPROACH PAVEMENT CONNECTOR
515001-03	NAME PLATE FOR BRIDGES
542401-01	METAL END SECTIONS FOR PIPE CULVERTS
601101-01	CONCRETE HEADWALL FOR PIPE DRAIN
606001-04	CONCRETE CURB TYPE B AND COMBINATION CONCRETE CURB AND GUTTER
609006-05	BRIDGE APPROACH PAVEMENT (DRAIN DETAIL)
610001-05	SHOULDER INLET WITH CURB
630001-09	STEEL PLATE BEAM GUARDRAIL
631026-05	TRAFFIC BARRIER TERMINAL TYPE 5
631031-09	TRAFFIC BARRIER TERMINAL TYPE 6
635006-03	REFLECTOR AND TERMINAL MARKER PLACEMENT
635011-02	REFLECTOR MARKER AND MOUNTING DETAILS
664001-02	CHAIN LINK FENCE
701006-03	OFF-RD OPERATIONS, 2L, 2W, 15' TO 24" FROM PAVEMENT EDGE
701201-04	LANE CLOSURE, 2L, 2W, DAY ONLY, FOR SPEEDS 45 MPH
701301-04	LANE CLOSURE, 2L, 2W, SHORT TIME OPERATIONS
701311-03	LANE CLOUSURE, 2L, 2W MOVING OPERATIONS - DAY ONLY
701901-01	TRAFFIC CONTROL DEVICES
720001-01	SIGN PANEL MOUNTING DETAILS
720006-02	SIGN PANEL ERECTION DETAILS
720011-01	METAL POSTS FOR SIGN, MARKERS & DELINEATORS
728001-01	TELESCOPING STEEL SIGN SUPPORTS
729001-01	APPLICATIONS OF TYPES A AND B METAL POSTS (FOR SIGNS AND MARKERS)
731001-01	BASE FOR TELESCOPING STEEL SIGN SUPPORT
780001-02	TYPICAL PAVEMENT MARKINGS
BLR 21-8	TYPICAL APPLICATION OF TRAFFIC CONTROL DEVICES FOR CONSTRUCTION ON RURAL LOCAL HIGHWAYS
BLR 22-6	TYPICAL APPLICATION OF TRAFFIC CONTROL DEVICES FOR CONSTRUCTION ON RURAL LOCAL HIGHWAYS (2L, 2W, ROAD CLOSED TO THRU TRAFFIC)

10/26/2010
N:\03_Jobs\03R\807\Struct\Sheet\S-000-TITle.dgn

LAYOUT	SMK	01/28/10
DRAWN	MGM	01/28/10
REVIEWED	SMK	01/28/10

STATE OF ILLINOIS
DEPARTMENT OF TRANSPORTATION
DIVISION OF HIGHWAYS

PLANS FOR PROPOSED MAJOR BRIDGE PROGRAM F.A.U. ROUTE 5103 (KISHWAUKEE ROAD) OVER KISHWAUKEE RIVER

SECTION 03-00337-00-BR
WINNEBAGO COUNTY
PROJECT BRM-5099(080)
JOB NUMBER C-92-096-09
CONTRACT NO. 85523

LOCATION OF SECTION INDICATED THUS:-

APPROVED October 26 20 10
COUNTY ENGINEER

PASSED Nov. 16 20 10
DISTRICT ENGINEER OF LOCAL ROADS & STREETS

Nov. 16 10
RELEASING FOR BID BASED ON LIMITED REVIEW
DEPUTY DIRECTOR OF HIGHWAYS REGION 2 ENGINEER

STATE OF ILLINOIS
DEPARTMENT OF TRANSPORTATION

R. 1 E

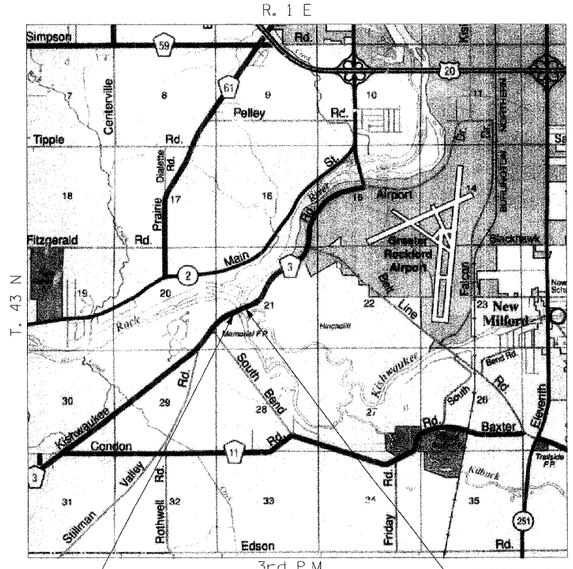

N

IMPROVEMENT ENDS STATION 93+85

IMPROVEMENT BEGINS STATION 83+50

LOCATION PLAN

0 1/8MI 1/4MI

SCALE OF LAYOUT
NET LENGTH = 1035 FEET (0.20 MI)

TRAFFIC DATA
HIGHWAY CLASSIFICATION: MINOR ARTERIAL (URBAN)
2010 ADT: 6,400
2030 ADT: 8,600
5% TRUCKS
DESIGN SPEED: 55 MPH
POSTED SPEED: 55 MPH

PROPOSED IMPROVEMENTS
REMOVAL AND REPLACEMENT OF THE EXISTING BRIDGE CARRYING F.A.U. ROUTE 5103 (KISHWAUKEE ROAD) OVER KISHWAUKEE RIVER AT STATION 88+44. NEW BRIDGE CONSISTS OF A THREE-SPAN COMPOSITE CONTINUOUS WELDED STEEL PLATE GIRDER SUPERSTRUCTURE SUPPORTED ON PILE BENT ABUTMENTS AND CONCRETE WALL PIERS. EXISTING STRUCTURE NUMBER 101-3018. PROPOSED STRUCTURE NUMBER 101-3100.

STUART M. KEMP
062 044427
REGISTERED PROFESSIONAL ENGINEER OF ILLINOIS

Stuart M. Kemp
SIGNATURE
10/26/10
DATE
LICENSE EXP. DATE: 11/30/11

J.U.L.I.E.
JOINT UTILITY LOCATION INFORMATION FOR EXCAVATION
1-800-892-0123 OR 811

811 Know what's below. Call before you dig.

UTILITY NOTE

THE LOCATIONS OF THOSE BURIED AND ABOVEGROUND UTILITIES SHOWN ARE APPROXIMATE, ARE SHOWN FOR CONTRACTOR INFORMATIONAL USE ONLY, AND ARE NOT TO BE REFERENCED FOR CONSTRUCTION PURPOSES. THE IMPLIED PRESENCE OR ABSENCE OF UTILITIES IS NOT TO BE CONSTRUED BY THE OWNER, ENGINEER, CONTRACTOR, OR SUBCONTRACTORS TO BE AN ACCURATE AND COMPLETE REPRESENTATION OF UTILITIES THAT MAY OR MAY NOT EXIST ON THE CONSTRUCTION SITE. BURIED AND ABOVEGROUND UTILITY LOCATION, IDENTIFICATION, AND MARKING ARE THE SOLE RESPONSIBILITY OF THE CONTRACTOR. REROUTING, DISCONNECTION, PROTECTION, ETC. OF ANY UTILITIES MUST BE COORDINATED AMONG THE CONTRACTOR, UTILITY COMPANY, AND OWNER. SITE SAFETY, INCLUDING THE AVOIDANCE OF HAZARDS, ASSOCIATED WITH BURIED AND ABOVEGROUND UTILITIES REMAIN THE SOLE RESPONSIBILITY OF THE CONTRACTOR.

Corporate License Number 184-001-084

JOB NO.	© Copyright Hanson Professional Services Inc. 2009	F.A.U. ROUTE	SECTION	COUNTY	TOTAL SHEETS	SHEET NO.
03R1807	HANSON	5103	03-00337-00-BR	Winnebago	66	1
DATE 10/26/10				CONTRACT NO. 85523		
		FED. ROAD DIST. NO. 2	ILLINOIS	FED. AID PROJECT		

GENERAL NOTES

1. WHERE SECTION, SUBSECTION, SUBDIVISION, OR PROPERTY MONUMENTS ARE ENCOUNTERED, THE ENGINEER SHALL BE NOTIFIED BEFORE SUCH MONUMENTS ARE REMOVED. THE CONTRACTOR SHALL PROTECT AND PRESERVE ALL PROPERTY MARKERS UNTIL AN OWNER OR AUTHORIZED SURVEYOR HAS WITNESSED OR REFERENCED THEIR LOCATION.

2. CONTRACTORS BIDDING THIS PROJECT SHALL VISIT THE SITE BEFORE BIDDING.

3. THE CONTRACTOR SHALL FIELD VERIFY ALL DIMENSIONS AND EXISTING CONDITIONS PRIOR TO CONSTRUCTION AND NOTIFY THE ENGINEER OF ANY DISCREPANCY IMMEDIATELY.

4. THE CONTRACTOR SHALL BE RESPONSIBLE FOR REPAIRS TO ANY UTILITY LINES AND EXISTING IMPROVEMENTS TO REMAIN THAT ARE DAMAGED AS A RESULT OF THE WORK.

5. ALL SECTIONS, DETAILS, AND NOTES SHOWN ON THE DRAWINGS ARE INTENDED TO BE TYPICAL AND SHALL APPLY TO SIMILAR SITUATIONS ELSEWHERE, UNLESS OTHERWISE NOTED.

6. THE CONTRACTOR IS RESPONSIBLE FOR OBTAINING ALL NECESSARY PERMITS.

7. THE CONTRACTOR, AT HIS OWN EXPENSE, SHALL BE REQUIRED AS DIRECTED BY THE ENGINEER TO RELOCATE OR TO REMOVE AND REINSTALL ALL ROAD SIGNS WHICH INTERFERE WITH CONSTRUCTION OPERATIONS AND TO TEMPORARILY RESET ALL SUCH SIGNS DURING CONSTRUCTION. ALL WORK INVOLVING SIGNS SHALL BE GOVERNED BY THE FOLLOWING REQUIREMENTS:
   - A. SIGNS SHALL NOT BE MOVED UNTIL PROGRESS OF WORK DEMANDS.
   - B. EVERY SIGN REMOVED MUST BE RE-ERECTED AT A TEMPORARY LOCATION IN A WORKMAN LIKE MANNER AND BE VISIBLE TO ALL TRAFFIC. ALL SUCH SIGNS MUST BE MAINTAINED STRAIGHT AND NEAT FOR THE DURATION OF THE TEMPORARY SETTING.

8. ALL ELEVATIONS, STATIONS, AND OFFSETS SHOWN ON THE PLANS SHALL BE FIELD VERIFIED BY THE CONTRACTOR PRIOR TO CONSTRUCTION.

9. ALL PAVEMENT, CURB, SIDEWALK AND DRIVEWAYS TO BE ADJUSTED SHALL BE SAW CUT FULL DEPTH AT THE LIMITS OF THE ADJUSTMENT AND TRANSITION. PAYMENT FOR THE SAW CUT SHALL BE INCLUDED IN THE COST OF THE ITEM BEING REMOVED.

UTILITY CONTACTS

UTILITY NAME	TYPE	PHONE NUMBER
COMMONWEALTH EDISON CO. 123 ENERGY AVENUE ROCKFORD, ILLINOIS 61109	ELECTRICAL	(815) 490-2320
COMCAST COMMUNICATIONS 4450 KISHWAUKEE STREET ROCKFORD, ILLINOIS 61109	CABLE TV	(815) 395-8977
AT&T LONG DISTANCE NETWORK SERVICES 866 ROCK CREEK ROAD PLANO, ILLINOIS 60545	COMMUNICATIONS	(847) 420-9115
SBC 2404 8TH AVENUE ROCKFORD, ILLINOIS 61108	COMMUNICATIONS	(815) 394-7276
NICOR GAS 4651 LINDEN ROAD ROCKFORD, ILLINOIS 61109	GAS	(815) 965-5416

LEGEND

Power Pole		Right of Way Line	
GuyWire or Deadman Anchor		Proposed Right of Way Line	
Power Pole with Light		Temporary Easement	
PROPOSED LIGHT POLE		Section/Grant Line	
Telephone Splice Box Above Ground		Solid Property/Lot Line	
Controller		Railroad	
Handhole		Edge of Pavement	
Traffic Signal		Edge of Sidewalk	
Traffic Mast Arm			
Deciduous Tree		Stream or Drainage Ditch	
Evergreen Tree		Fence	
Tree Removal		Cable TV	CTV
Stump		Aerial Power Line	A
Manhole		Gas Pipe	G
Inlet		Guardrail	
Fire Hydrant		Sanitary Sewer	
Light Pole		Storm Sewer	
Culvert End Section		Telephone Cable	T
Water Meter Valve Box		Water Pipe	W
Valve Vault		Commercial Building	
Test Well			
Mailbox			
Advertising Sign			
ROW Marker			
Flag Pole			

© Copyright Hanson Professional Services Inc. 2010

HANSON

FILE NAME = C-101-GN.dgn	USER NAME =	DESIGNED -	REVISED -
		DRAWN -	REVISED -
MODEL NAME =	PLOT SCALE =	CHECKED -	REVISED -
	PLOT DATE = 10/26/2010	DATE -	REVISED -

LAYOUT / DRAWN / REVIEWED

STATE OF ILLINOIS
DEPARTMENT OF TRANSPORTATION

GENERAL NOTES
KISHWAUKEE RIVER BRIDGE
WINNEBAGO COUNTY, ILLINOIS

SCALE: | SHEET NO. OF SHEETS | STA. TO STA.

F.A.U. RTE.	SECTION	COUNTY	TOTAL SHEETS	SHEET NO.
5103	03-00337-00-BR	WINNEBAGO	66	2

CONTRACT NO. 85523

FED. ROAD DIST. NO. | ILLINOIS | FED. AID PROJECT

SUMMARY OF QUANTITIES

	CODE #	ITEM	UNIT	TOTAL QUANTITY CODE 0011	TOTAL QUANTITY CODE 0042
	20100110	TREE REMOVAL (6 TO 15 UNTIS DIAMETER)	UNITS	59.5	
	20200100	EARTH EXCAVATION	CU YD	1160	
	20800150	TRENCH BACKFILL	CU YD	15	
	21101615	TOPSOIL, FURNISH AND PLACE, 4"	SQ YD	1260	
	25000210	SEEDING, CLASS 2A	ACRE	0.27	
	25000400	NITROGEN FERTILIZER NUTRIENT	POUND	24	
	25000500	PHOSPHORUS FERTILIZER NUTRIENT	POUND	24	
	25000600	POTASSIUM FERTILIZER NUTRIENT	POUND	24	
	25100630	EROSION CONTROL BLANKET	SQ YD	1307	
	28000250	TEMPORARY EROSION CONTROL SEEDING	POUND	54	
	28000305	TEMPORARY DITCH CHECKS	FOOT	150	
	28000400	PERIMETER EROSION BARRIER	FOOT	970	
	28100107	STONE RIPRAP, CLASS A4	SQ YD	230	
	28100109	STONE RIPRAP, CLASS A5	SQ YD	90	
	28200200	FILTER FABRIC	SQ YD	320	
	31101810	SUB-BASE GRANULAR MATERIAL, TYPE B 12"	SQ YD	1489	
	35100400	AGGREGATE BASE COURSE, TYPE A 5"	SQ YD	342	
	40600100	BITUMINOUS MATERIALS (PRIME COAT)	GAL	993	
	40600625	LEVELING BINDER (MACHINE METHOD), N50	TON	28.8	
	40603080	HOT-MIX ASPHALT BINDER COURSE, IL-19.0, N50	TON	654.3	
	40603310	HOT-MIX ASPHALT SURFACE COURSE, MIX "C", N50	TON	28.8	
	40603335	HOT-MIX ASPHALT SURFACE COURSE, MIX "D", N50	TON	154	
*	44000100	PAVEMENT REMOVAL	SQ YD	1773	
	48100500	AGGREGATE SHOULDERS, TYPE A 6"	SQ YD	838	
	48100700	AGGREGATE SHOULDERS, TYPE A 8"	SQ YD	113	
	48203021	HOT-MIX ASPHALT SHOULDERS, 6"	SQ YD	7	
*	50100100	REMOVAL OF EXISTING STRUCTURES	EACH	1	
*	50104650	SLOPE WALL REMOVAL	SQ YD	72	
	50200100	STRUCTURE EXCAVATION	CU YD	330	
	50200300	COFFERDAM EXCAVATION	CU YD	425.0	
	50202901	COFFERDAM LOCATION 1	EACH	1	
	50202902	COFFERDAM LOCATION 2	EACH	1	
	50300100	FLOOR DRAINS	EACH	14	
	50300225	CONCRETE STRUCTURES	CU YD	428.7	
	50300255	CONCRETE SUPERSTRUCTURE	CU YD	774.1	
	50300260	BRIDGE DECK GROOVING	SQ YD	1601	
	50300265	SEAL COAT CONCRETE	CU YD	151.1	
	50300280	CONCRETE ENCASEMENT	CU YD	15.3	
	50300300	PROTECTIVE COAT	SQ YD	2928	
	50500105	FURNISHING & ERECTING STRUCT STEEL	L SUM	1	
	50500505	STUD SHEAR CONNECTORS	EACH	4536	
	50800205	REINFORCEMENT BARS, EPOXY COATED	POUND	249170	
	50800515	BAR SPLICERS	EACH	91	
△	50901720	BICYCLE RAILING	FOOT	486.6	
△	50901750	PARAPET RAILING	FOOT	514.5	
	51201800	FURNISHING STEEL PILES HP14 X 73	FOOT	2136	
	51202305	DRIVING PILES	FOOT	2136	
	51203800	TEST PILE STEEL HP14 X 73	EACH	4	
	51204650	PILE SHOES	EACH	65	
	51500100	NAME PLATES	EACH	1	

SUMMARY OF QUANTITIES

	CODE #	ITEM	UNIT	TOTAL QUANTITY CODE 0011	TOTAL QUANTITY CODE 0042
	52000110	PREFORMED JOINT STRIP SEAL	FOOT	43.8	
	52000216	FINGER PLATE EXPANSION JOINT 5"	FOOT	43.8	
	52000600	FABRIC REINFORCED ELASTOMERIC TROUGH	FOOT	46.8	
	52100020	ELASTOMERIC BEARING ASSEMBLY, TYPE II	EACH	7	
	52100030	ELASTOMERIC BEARING ASSEMBLY, TYPE III	EACH	7	
	52100520	ANCHOR BOLTS, 1"	EACH	28	
	52100530	ANCHOR BOLTS, 1 1/4"	EACH	14	
	52100540	ANCHOR BOLTS, 1 1/2"	EACH	14	
	54213447	END SECTIONS 12"	EACH	2	
	550A4000	STORM SEWERS, CLASS A, TYPE 1, EQUIVALENT ROUND SIZE 18"	FOOT	92	
	58700300	CONCRETE SEALER	SQ FT	1017	
	59100100	GEOCOMPOSITE WALL DRAIN	SQ YD	77	
	60100945	PIPE DRAINS 12"	FOOT	82	
	60219000	MANHOLES, TYPE A, 4'-DIAMETER, TYPE 8 GRATE	EACH	1	
	60600605	CONCRETE CURB, TYPE B	FOOT	16	
	60900140	TYPE B INLET BOX STANDARD 609006	EACH	1	
*	60900515	CONCRETE THRUST BLOCKS	EACH	2	
△	63000001	STEEL PLATE BEAM GUARDRAIL, TYPE A, 6 FOOT POSTS	FOOT	212.5	
△	63100070	TRAFFIC BARRIER TERMINAL, TYPE 5	EACH	2	
△	63100085	TRAFFIC BARRIER TERMINAL, TYPE 6	EACH	2	
△	63100167	TRAFFIC BARRIER TERMINAL, TYPE 1 (SPECIAL) TANGENT	EACH	4	
*	63200310	GUARDRAIL REMOVAL	FOOT	689	
△	66400205	CHAIN LINK FENCE, 5'	FOOT	306	
	67000400	ENGINEER'S FIELD OFFICE, TYPE A	CAL MO	8	
	67100100	MOBILIZATION	L SUM	1	
△ *	78001110	PAINT PAVEMENT MARKING - LINE 4"	FOOT	3134	
△	78200410	GUARDRAIL MARKERS, TYPE A	EACH	5	
△	78200520	BARRIER WALL MARKERS, TYPE B	EACH	12	
△	78201000	TERMINAL MARKER - DIRECT APPLIED	EACH	4	
*	X0325644	HIGH LOAD MULTI-ROTATION BEARINGS, GUIDED EXPANSION, 400K	EACH	7	
*	X2070304	POROUS GRANULAR EMBANKMENT, SPECIAL	CU YD	170.8	
*	X6090150	TYPE B INLET BOX STANDARD 609006 (SPECIAL)	EACH	1	
*	X7010216	TRAFFIC CONTROL AND PROTECTION (SPECIAL)	L SUM	1	
*	XX006821	CONCRETE TRUCK WASHOUT	L SUM	1	
	Z0013302	SEGMENTAL CONCRETE BLOCK WALL	SQ FT	660	
*	Z0013797	STABILIZED CONSTRUCTION ENTRANCE	SQ YD	374	
*	Z0013798	CONSTRUCTION LAYOUT	L SUM	1	
*	Z0046304	PIPE UNDERDRAINS FOR STRUCTURES 4"	FOOT	184	
	Z0076600	TRAINEES	HOUR		1000

*** "SEE SPECIAL PROVISIONS, HIGHWAY STANDARDS, GENERAL NOTES, AND/OR DETAILS IN PLANS"**

△ SPECIALTY ITEMS

HANSON
© Copyright Hanson Professional Services Inc. 2010

FILE NAME = C-821-SOQ.dgn	USER NAME =	DESIGNED -	REVISED -
		DRAWN -	REVISED -
MODEL NAME =	PLOT SCALE =	CHECKED -	REVISED -
	PLOT DATE = 10/26/2010	DATE -	REVISED -

LAYOUT / DRAWN / REVIEWED

STATE OF ILLINOIS
DEPARTMENT OF TRANSPORTATION

SUMMARY OF QUANTITIES
KISHWAUKEE RIVER BRIDGE
WINNEBAGO COUNTY, ILLINOIS

SCALE: | SHEET NO. OF SHEETS | STA. TO STA.

F.A.U. RTE.	SECTION	COUNTY	TOTAL SHEETS	SHEET NO.
5103	03-00337-00-BR	WINNEBAGO	66	3
		CONTRACT NO. 85523		

FED. ROAD DIST. NO. | ILLINOIS | FED. AID PROJECT

PAVEMENT REMOVAL

STA.	WIDTH (FT.)	AVG. WIDTH (FT.)	LENGTH (FT.)	AREA (SQ. YD.)
83+50.00	24.0			
		32.0	276.0	981.3
86+26.00	24.0			
90+88.00	24.0			
		24.0	297.0	792.0
93+85.00	24.0			
			TOTAL	1773.3

SUB-BASE GRANULAR MATERIAL, TYPE B 12" / HOT-MIX ASPHALT BINDER COURSE, IL-19.0, N50 / HOT-MIX ASPHALT SURFACE COURSE, MIX "D", N50 / BITUMINOUS MATERIAL (PRIME COAT)

STA.	WIDTH (FT.)	AVG. WIDTH (FT.)	LENGTH (FT.)	AREA (SQ. YD.)	THICKNESS (IN.)	UNIT WT. (LBS. / SY / IN.)	TOT. WT. (TONS)	THICKNESS (IN.)	UNIT WT. (LBS. / SY / IN.)	TOT. WT. (TONS)	SUB-BASE RATE	SUB-BASE GAL	HMA BINDER RATE	HMA BINDER GAL
83+50.00	26.0													
		26.0	234.3	676.7	8.5	112	297.3	2	112	70.0	0.5	312.3	0.1	62.5
85+84.25	26.0													
91+03.75	26.0													
		26.0	281.3	812.5	8.5	112	357.0	2	112	84.0	0.5	375.0	0.1	75.0
93+85.00	26.0													
				TOTAL	1489.2		TOTAL	654.3		TOTAL	154.0	SUB 687.3	SUB	137.5
												TOTAL		824.8

AGGREGATE SHOULDERS, TYPE A 8"

STA.	WIDTH (FT.)	AVG. WIDTH (FT.)	LENGTH (FT.)	SKEW FACTOR	ADJUSTED LENGTH	AREA (SQ. YD.)
84+40.00	3.0					
		3.0	76.05	1.0	76.0	25.3
85+16.05	3.0					
		3.0	84.20	1.005	84.6	28.2
86+00.25	3.0					
90+87.75	4.0					
		4.0	84.20	1.0	84.2	37.4
91+71.95	4.0					
		4.0	50.05	1.005	50.3	22.4
92+22.00	4.0					
					TOTAL	113.3

AGGREGATE SHOULDERS, TYPE A 6"

STA.	RT. OFFSETS		LT. OFFSETS		RT. WIDTH (FT.)	LT. WIDTH (FT.)	AVG. RT. WIDTH (FT.)	AVG. LT. WIDTH (FT.)	LENGTH (FT.)	RT. AREA (SQ. YD.)	LT. AREA (SQ. YD.)
83+50.00	20.00	12.00			8.00						
							8.00		88.05	78.3	
84+38.05	20.00	12.00			8.00						
							5.71		119.08	75.5	
85+57.13	15.42	12.00			3.42						
							3.42		27.12	10.3	
85+84.25	15.42	12.00			3.42						
91+03.75	15.42	12.00			3.42						
							3.42		27.13	10.3	
91+30.88	15.42	12.00			3.42						
							5.71		119.08	75.5	
92+49.96	20.00	12.00			8.00						
							8.00		135.04	120.0	
93+85.00	20.00	12.00			8.00						
83+50.00			20.00	12.00		8.00					
								8.00	90.00		80.0
84+40.00			20.00	12.00		8.00					
84+55.00			25.00	12.00		13.00					
								13.00	60.45		87.3
85+15.45			25.00	12.00		13.00					
								10.21	55.80		63.3
85+71.25			19.42	12.00		7.42					
85+71.25			19.42	15.92		3.50					
								3.10	13.00		4.5
85+84.25			18.12	15.42		2.70					
91+03.75			18.12	15.42		2.70					
								3.19	16.00		5.7
91+19.75			19.72	16.04		3.68					
91+19.75			19.72	12.00		7.72					
								7.33	52.80		43.0
91+72.55			25.00	18.07		6.93					
								9.97	40.45		44.8
92+13.00			25.00	12.00		13.00					
92+28.00			20.00	12.00		8.00					
								8.00	157.00		139.6
93+85.00			20.00	12.00		8.00					
									SUBTOTALS	370.0	468.1
									TOTAL	838.1	

AGGREGATE BASE COURSE, TYPE A 5" / LEVELING BINDER (MACHINE METHOD), N50 / HOT-MIX ASPHALT SURFACE COURSE, MIX "C", N50

STA.	WIDTH (FT.)	AVG. WIDTH (FT.)	LENGTH (FT.)	SKEW FACTOR	ADJUSTED LENGTH	AREA (SQ. YD.)	THICKNESS (IN.)	UNIT WT. (LBS. / SY / IN.)	TOT. WT. (TONS)
84+40.00	23.0								
		23.0	15.0	1.0	15.0	38.3	1.5	112	3.2
84+55.00	23.0								
84+55.00	10.0								
		10.0	60.5	1.0	60.5	67.2	1.5	112	5.6
85+15.45	10.0								
		10.0	68.8	1.005	69.1	76.8	1.5	112	6.5
85+84.25	10.0								
91+03.75	10.0								
		10.0	68.8	1.005	69.1	76.8	1.5	112	6.5
91+72.55	10.0								
		10.0	40.5	1.000	40.5	44.9	1.5	112	3.8
92+13.00	10.0								
92+13.00	23.0								
		23.0	15.0	1.000	15.0	38.3	1.5	112	3.2
92+28.00	23.0								
					TOTAL	342.4		TOTAL	28.8

CHAIN LINK FENCE, 5'

STA.	LENGTH (FT.)	SKEW FACTOR	ADJUSTED LENGTH
84+20.00			
	96.05	1.0	96.0
85+16.05			
	83.95	1.005	84.4
86+00.00			
90+88.00			
	83.95	1.0	84.0
91+71.95			
	41.05	1.005	41.3
92+13.00			
		TOTAL	305.6

SEEDING SCHEDULE

LOCATION (BEGIN STATION – END STATION – OFFSET)	SEEDING, CLASS 2A (ACRES)	NITROGEN FERTILIZER NUTRIENT (POUNDS)	PHOSPHORUS FERTILIZER NUTRIENT (POUNDS)	POTASSIUM FERTILIZER NUTRIENT (POUNDS)	TEMPORARY EROSION CONTROL SEEDING (POUND)
EAST SIDE OF STRUCTURE					
83+50.00 – 86+00.25	0.19	17	17	17	38
SUBTOTAL	**0.19**	**17**	**17**	**17**	**38**
WEST SIDE OF STRUCTURE					
90+87.75 – 93+85.00	0.08	7	7	7	16
SUBTOTAL	**0.08**	**7**	**7**	**7**	**16**
SUBTOTAL	**0.00**	**0**	**0**	**0**	**0**
TOTAL	**0.27**	**24**	**24**	**24**	**54**

PAVEMENT MARKING SCHEDULE

LOCATION BEGIN STATION	END STATION	OFFSET	PAINT PAVEMENT MARKING LINE 4" (FOOT)	GUARDRAIL MARKERS TYPE A (EACH)	BARRIER WALL MARKERS (EACH)	TERMINAL MARKER DIRECT APPLIED (EACH)	NOTE
83+50.00	93+85.00	LT & RT	2070				WHITE SOLID
85+80.00	93+85.00	CENTERLINE	805				YELLOW / SOLID RT
83+50.00	93+85.00	CENTERLINE	259				YELLOW / SKIP DASH LT
84+67.00	85+47.00	RT		2			AT 80' SPA.
86+27.00	90+27.00	RT			6		AT 80' SPA.
91+07.00	-	RT		1			
85+52.00	-	LT		1			
86+32.00	90+32.00	LT			6		AT 80' SPA.
91+12.00	-	LT		1			
84+07.10	-	RT				1	
91+67.20	-	RT				1	
84+67.30	-	LT				1	
91+96.90	-	LT				1	
		TOTAL	3134	5	12	4	

EARTHWORK SCHEDULE

BEGIN STATION	END STATION	A EARTH EXCAVATION (CU YD)	B EXCAVATION TO BE USED IN EMBANKMENT, ADJUSTED FOR SHRINKAGE (20%) (CU YD)	C EMBANKMENT (CU YD)	D EARTHWORK BALANCE EXCESS (+) OR SHORTAGE (-) (CU YD)
83+50.00	86+00.25	498	398	440	-42
90+87.75	93+85.00	660	528	67	461
	TOTAL	1160	925	505	420

EQUATIONS USED
B = A * 0.80
D = B - C

© Copyright Hanson Professional Services Inc. 2010

HANSON

FILE NAME = C-601-SCH.dgn	USER NAME =	DESIGNED -	REVISED -
		DRAWN -	REVISED -
MODEL NAME =	PLOT SCALE =	CHECKED -	REVISED -
	PLOT DATE = 10/26/2010	DATE -	REVISED -

LAYOUT / DRAWN / REVIEWED

STATE OF ILLINOIS
DEPARTMENT OF TRANSPORTATION

SCHEDULE OF QUANTITIES
KISHWAUKEE RIVER BRIDGE
WINNEBAGO COUNTY, ILLINOIS

SCALE: | SHEET NO. OF SHEETS | STA. TO STA.

F.A.U. RTE.	SECTION	COUNTY	TOTAL SHEETS	SHEET NO.
5103	03-00337-00-BR	WINNEBAGO	66	4

CONTRACT NO. 85523

FED. ROAD DIST. NO. | ILLINOIS | FED. AID PROJECT

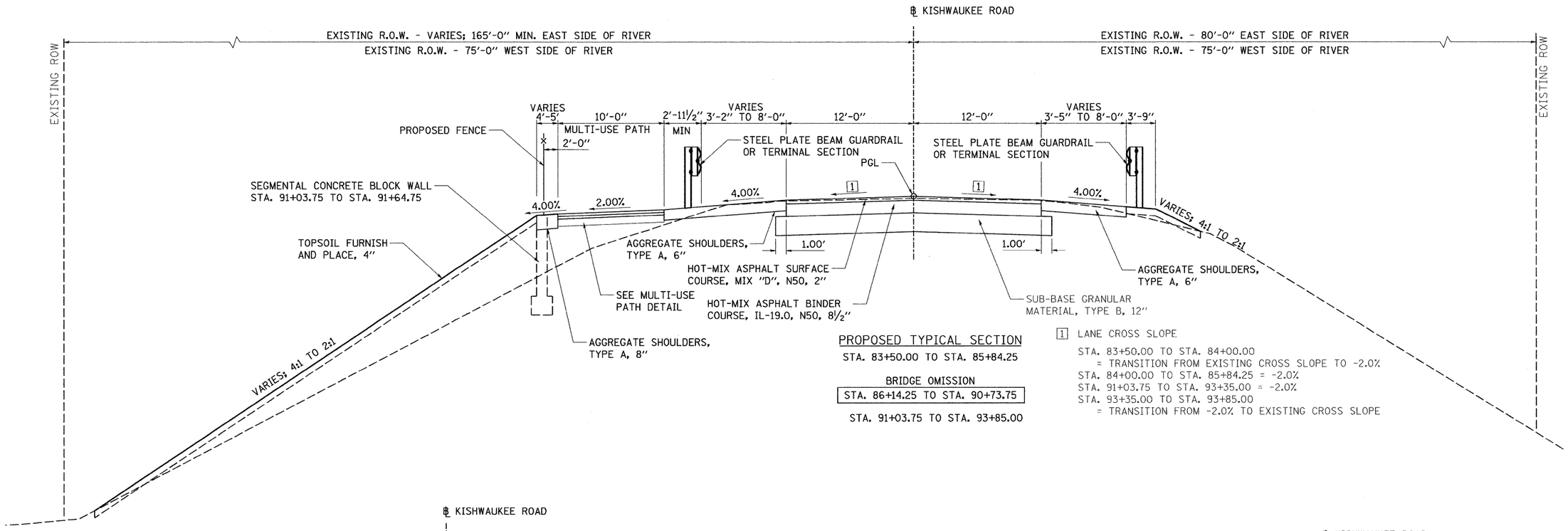

PROPOSED TYPICAL SECTION

STA. 83+50.00 TO STA. 85+84.25

BRIDGE OMISSION

STA. 86+14.25 TO STA. 90+73.75

STA. 91+03.75 TO STA. 93+85.00

1 LANE CROSS SLOPE

STA. 83+50.00 TO STA. 84+00.00
= TRANSITION FROM EXISTING CROSS SLOPE TO -2.0%
STA. 84+00.00 TO STA. 85+84.25 = -2.0%
STA. 91+03.75 TO STA. 93+35.00 = -2.0%
STA. 93+35.00 TO STA. 93+85.00
= TRANSITION FROM -2.0% TO EXISTING CROSS SLOPE

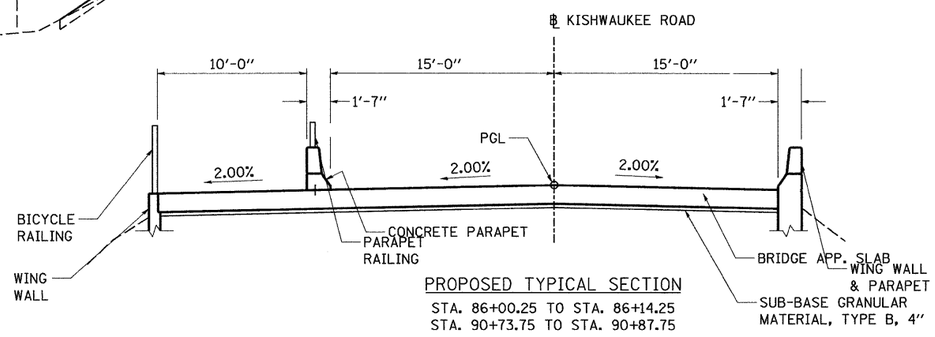

PROPOSED TYPICAL SECTION

STA. 86+00.25 TO STA. 86+14.25
STA. 90+73.75 TO STA. 90+87.75

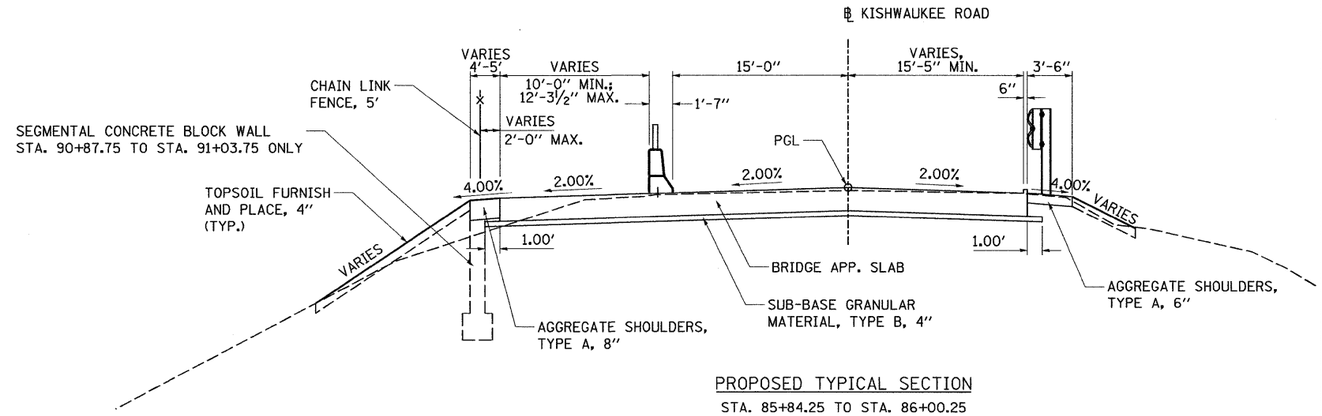

PROPOSED TYPICAL SECTION

STA. 85+84.25 TO STA. 86+00.25
STA. 90+87.75 TO STA. 91+03.75

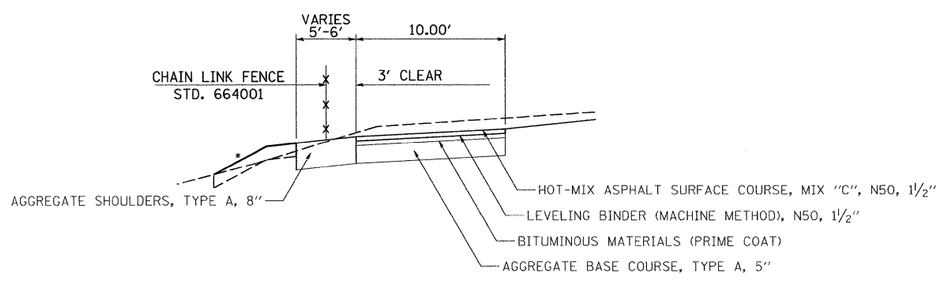

MULTI-USE PATH TYPICAL SECTION

* VARIES; 4:1 TO 2:1

	KISHWAUKEE PAVEMENT		SHARED USE PATH
MIXTURE USES(S):	SURFACE	BINDER	& SHOULDER
PG:	PG 64-22	PG 64-22	PG 58-22
DESIGN AIR VOIDS	4.0 @ N50	4.0 @ N50	3 @ N50
MIXTURE COMPOSITION (GRADATION MIXTURE)	IL 9.5 OR 12.5	IL 19.0	IL 9.5
FRICTION AGGREGATE	D	N/A	C
20 YEAR ESAL	1.7	1.7	N/A
MIX UNIT WEIGHT	112 lbs/sy/in		112 lbs/sy/in

© Copyright Hanson Professional Services Inc. 2010

HANSON

LAYOUT / DRAWN / REVIEWED

FILE NAME = C-501-TYP.dgn	USER NAME =	DESIGNED - MWH	REVISED -
MODEL NAME =		DRAWN - MWH	REVISED -
	PLOT SCALE =	CHECKED - DPA	REVISED -
	PLOT DATE = 10/26/2010	DATE - 07/10/08	REVISED -

STATE OF ILLINOIS
DEPARTMENT OF TRANSPORTATION

TYPICAL SECTIONS
KISHWAUKEE RIVER BRIDGE
ROCKFORD, ILLINOIS

SCALE: | SHEET NO. OF SHEETS | STA. TO STA.

F.A.U. RTE.	SECTION	COUNTY	TOTAL SHEETS	SHEET NO.
5103	03-00337-00-BR	WINNEBAGO	66	5
		CONTRACT NO. 85523		

FED. ROAD DIST. NO. | ILLINOIS | FED. AID PROJECT

ALIGNMENT COORDINATES			
CONTROL ITEM		NORTHING	EASTING
CONTROL	10	2,011,337.15	2,576,648.32
CONTROL	11	2,011,986.74	2,577,986.81
CONTROL	12	2,011,517.12	2,577,048.31
CONTROL	14	2,011,781.34	2,577,657.27
POT	83+50.00	2,011,866.07	2,577,793.02
POT	85+84.25	2,011,773.30	2,577,577.92
POT	86+14.25	2,011,761.42	2,577,550.38
POT	90+73.75	2,011,579.43	2,577,128.45
POT	91+03.75	2,011,567.55	2,577,100.90
POT	94+10.00	2,011,446.26	2,576,819.69

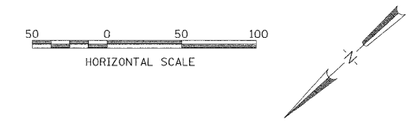

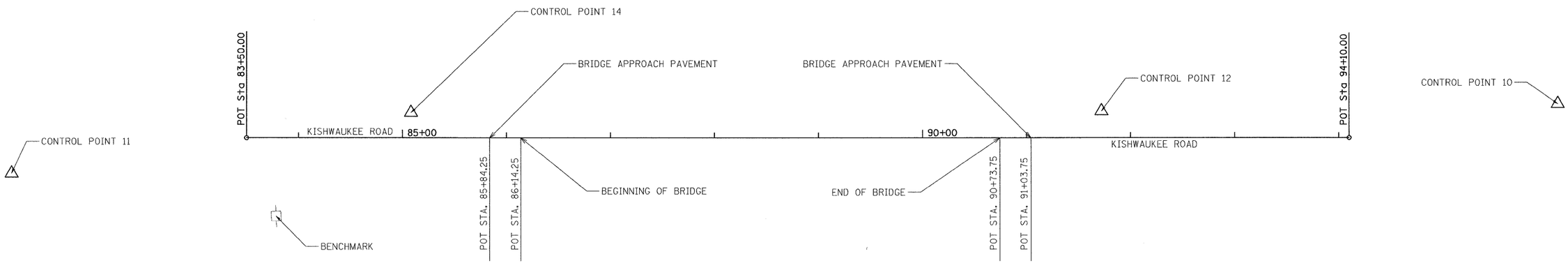

BENCHMARK

RAILROAD SPIKE IN POWER POLE
STA. 83+78.50, 75.30' RT.
ELEVATION 687.86

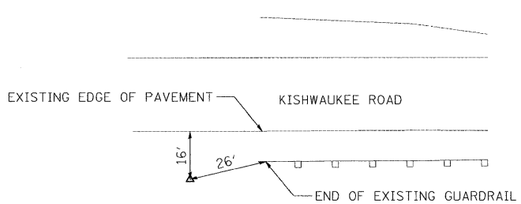

CONTROL POINT 11

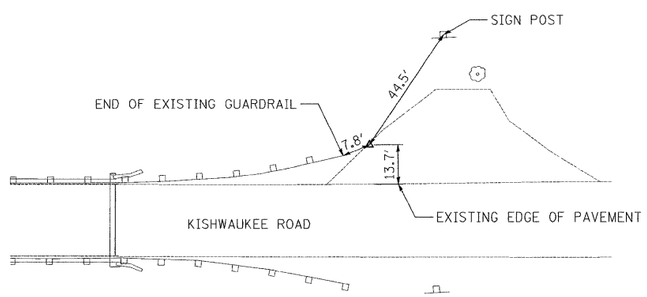

CONTROL POINT 12

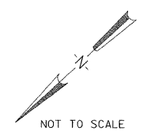

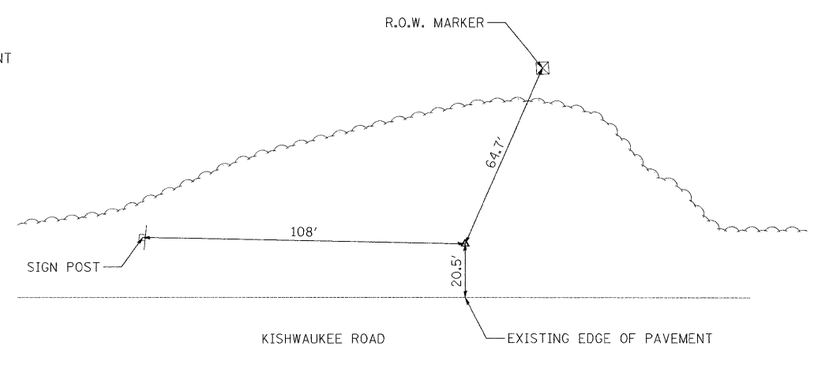

CONTROL POINT 10

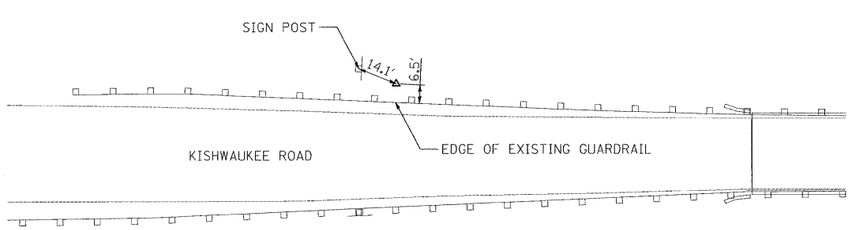

CONTROL POINT 14

© Copyright Hanson Professional Services Inc. 2010

HANSON

FILE NAME = C-101-GEOM.dgn	USER NAME =	DESIGNED -	REVISED -
		DRAWN -	REVISED -
MODEL NAME =	PLOT SCALE =	CHECKED -	REVISED -
	PLOT DATE = 10/26/2010	DATE -	REVISED -

LAYOUT / DRAWN / REVIEWED

STATE OF ILLINOIS
DEPARTMENT OF TRANSPORTATION

ALIGNMENT, TIES, & BENCHMARKS
KISHWAUKEE RIVER BRIDGE
WINNEBAGO COUNTY, IL

SCALE: | SHEET NO. OF SHEETS | STA. TO STA.

F.A.U. RTE.	SECTION	COUNTY	TOTAL SHEETS	SHEET NO.
5103	03-00337-00-BR	WINNEBAGO	66	6
		CONTRACT NO. 85523		

FED. ROAD DIST. NO. | ILLINOIS | FED. AID PROJECT

© Copyright Hanson Professional Services Inc. 2010

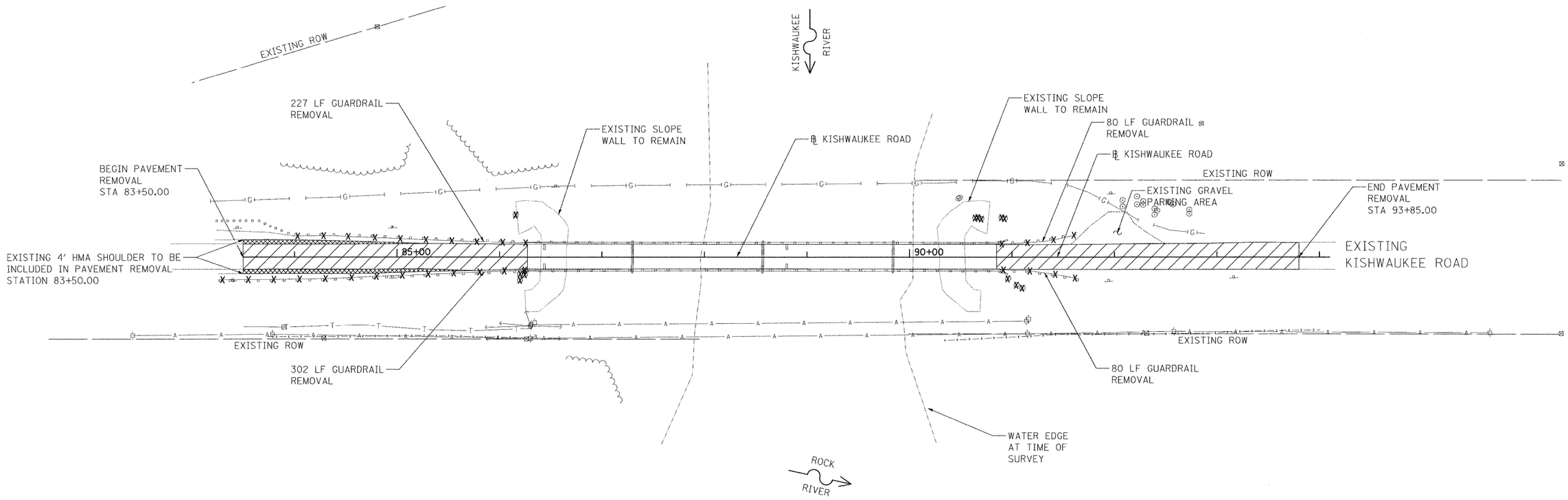

TREE REMOVAL		
STA.	OFFSET	UNITS
86+16.00	41.30 LT	6.5
86+20.12	22.65 RT	< 6
86+20.20	16.5 RT	< 6
86+24.70	17.33 RT	< 6
90+64.34	38.27 LT	8.0
90+66.83	38.65 LT	10.0
90+70.22	37.16 LT	13.5
90+90.00	38.50 LT	11.0
90+93.00	37.50 LT	10.5
90+96.22	21.13 RT	< 6
91+04.61	27.3 RT	< 6
91+10.32	30.25 RT	< 6
	TOTAL	59.5

NOTE:

SEE BRIDGE SHEETS FOR BRIDGE REMOVAL ITEMS.

REMOVAL LEGEND

- PAVEMENT REMOVAL
- SHOULDER REMOVAL (TO BE INCLUDED IN PAVEMENT REMOVAL)
- GUARDRAIL REMOVAL
- TREE TO BE REMOVED

N

50 0 50 100
SCALE

FILE NAME = C-102-DEM.dgn	USER NAME =	DESIGNED -	REVISED -
		DRAWN -	REVISED -
MODEL NAME =	PLOT SCALE =	CHECKED -	REVISED -
	PLOT DATE = 10/26/2010	DATE -	REVISED -

LAYOUT / DRAWN / REVIEWED

STATE OF ILLINOIS
DEPARTMENT OF TRANSPORTATION

REMOVAL PLAN
KISHWAUKEE RIVER BRIDGE
WINNEBAGO COUNTY, IL

SCALE: | SHEET NO. OF SHEETS | STA. TO STA.

F.A.U. RTE.	SECTION	COUNTY	TOTAL SHEETS	SHEET NO.
5103	03-00337-00-BR	WINNEBAGO	66	7

CONTRACT NO. 85523

FED. ROAD DIST. NO. | ILLINOIS | FED. AID PROJECT

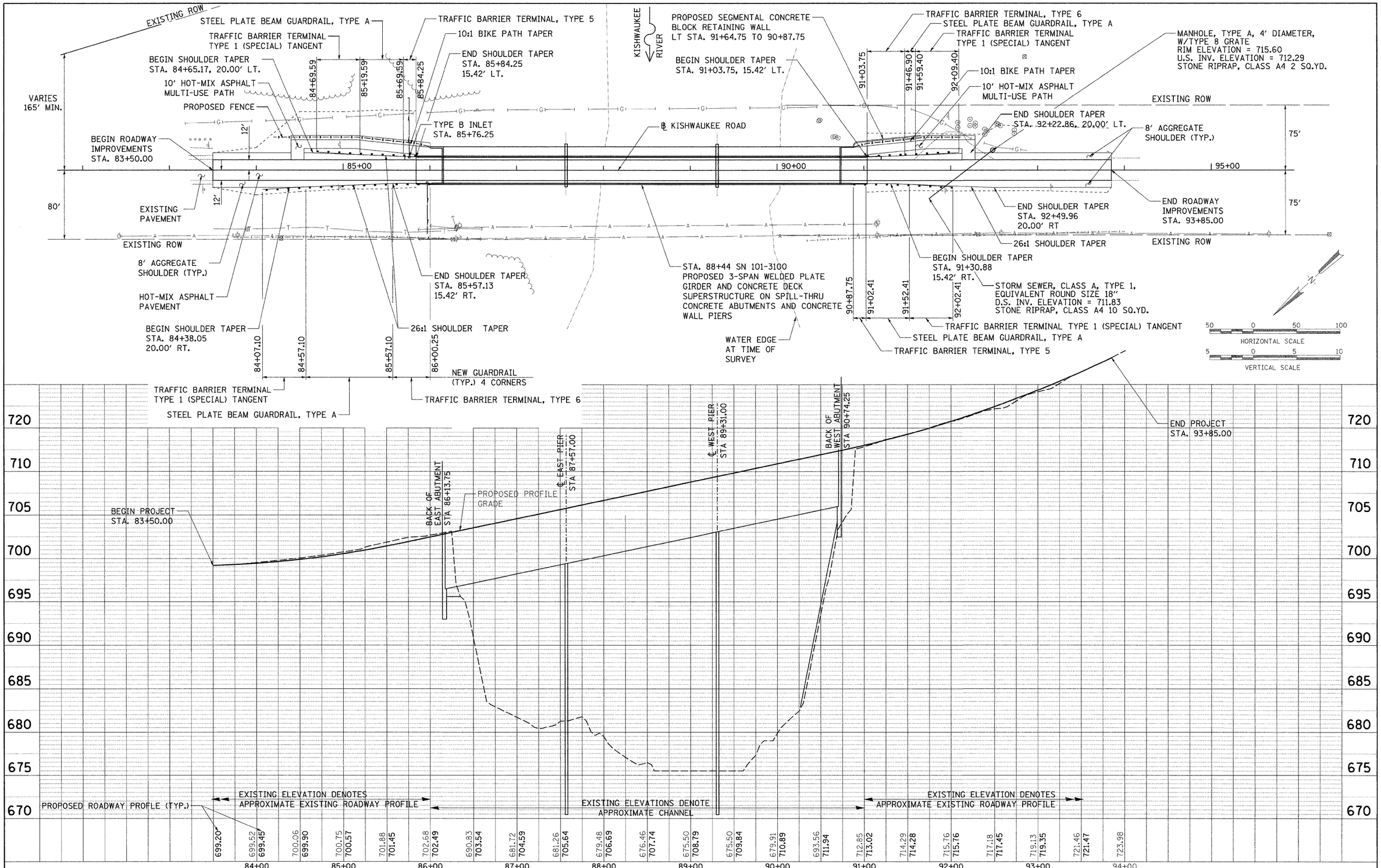

PLAN		BY	DATE
SURVEYED			
PLOTTED			
ALIGNMENT CHECKED			
RT. OF WAY CHECKED			
CADD FILE NAME			
NOTE BOOK NO.			

PROFILE		BY	DATE
SURVEYED			
PLOTTED			
PROFILE CHECKED			
ELEV. NOTED			
STRUCTURE NOTATNS CH'KD			
NOTE BOOK NO.			

© Copyright Hanson Professional Services Inc. 2010

HANSON
Hanson Professional Services Inc.

FILE NAME = C-101-PP.dgn	USER NAME = Pop00275	DESIGNED - MWH - 06/17/08	REVISED -
		DRAWN - MWH - 07/03/08	REVISED -
	PLOT SCALE = 50.000 ' / in.	CHECKED - DPA - 07/07/08	REVISED -
	PLOT DATE = 10\27\2010	DATE -	REVISED -

STATE OF ILLINOIS
DEPARTMENT OF TRANSPORTATION

PLAN AND PROFILE
KISHWAUKEE RIVER BRIDGE
WINNEBAGO COUNTY, ILLINOIS

SCALE: | SHEET NO. OF SHEETS | STA. TO STA.

F.A.U. RTE.	SECTION	COUNTY	TOTAL SHEETS	SHEET NO.
5103	03-00337-00-BR	WINNEBAGO	66	8

CONTRACT NO. 85523

ILLINOIS FED. AID PROJECT

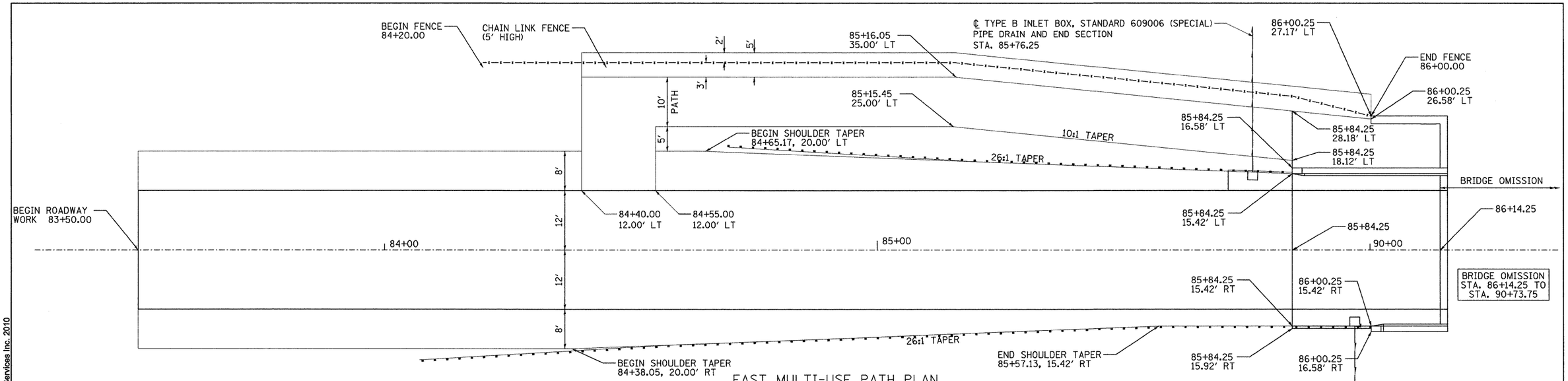

EAST MULTI-USE PATH PLAN

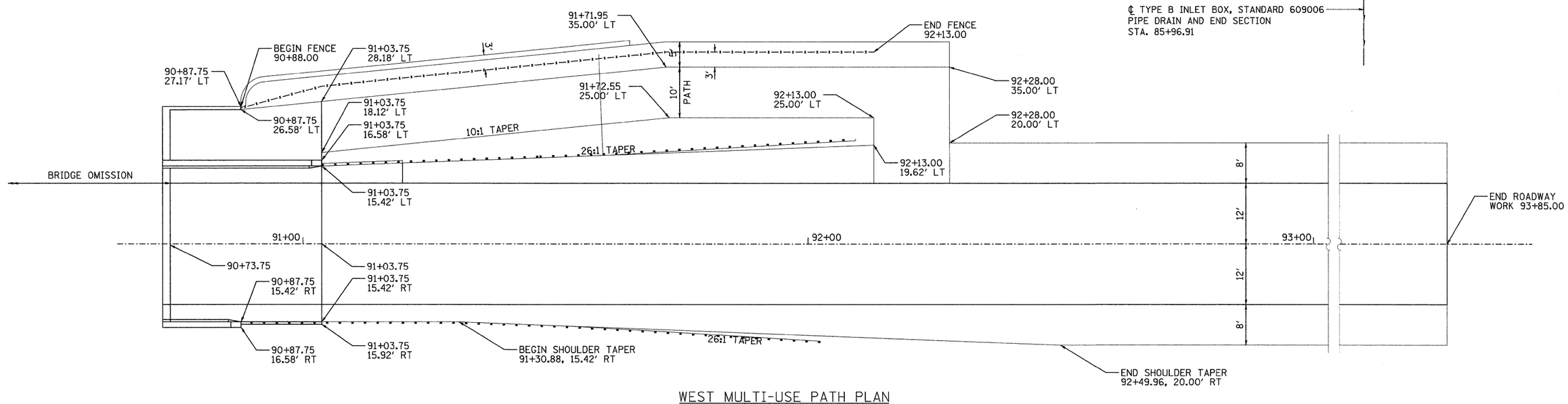

WEST MULTI-USE PATH PLAN

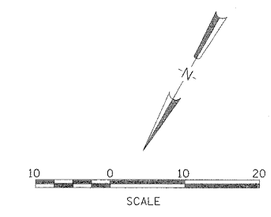

© Copyright Hanson Professional Services Inc. 2010

HANSON

FILE NAME = C-502-DET.dgn	USER NAME =	DESIGNED - MWH - 06/17/08	REVISED -	STATE OF ILLINOIS DEPARTMENT OF TRANSPORTATION	MULTI-USE PATH PLAN AND SECTION KISHWAUKEE RIVER BRIDGE WINNEBAGO COUNTY, ILLINOIS	F.A.U. RTE.	SECTION	COUNTY	TOTAL SHEETS	SHEET NO.
		DRAWN - MWH - 07/10/08	REVISED -			5103	03-00337-00-BR	WINNEBAGO	66	9
MODEL NAME =	PLOT SCALE =	CHECKED - DPA - 07/10/08	REVISED -					CONTRACT NO. 85523		
	PLOT DATE = 10/26/2010	DATE -	REVISED -		SCALE: SHEET NO. OF SHEETS STA. TO STA.	FED. ROAD DIST. NO.	ILLINOIS	FED. AID PROJECT		

LAYOUT
DRAWN
REVIEWED

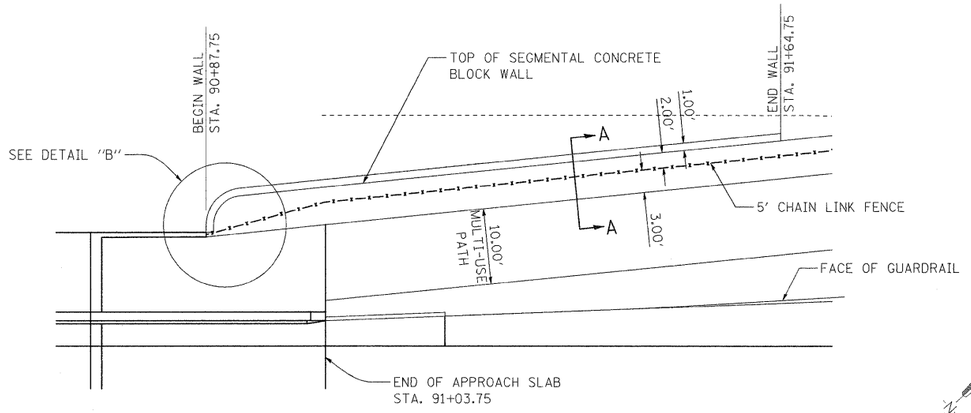

WALL PLAN

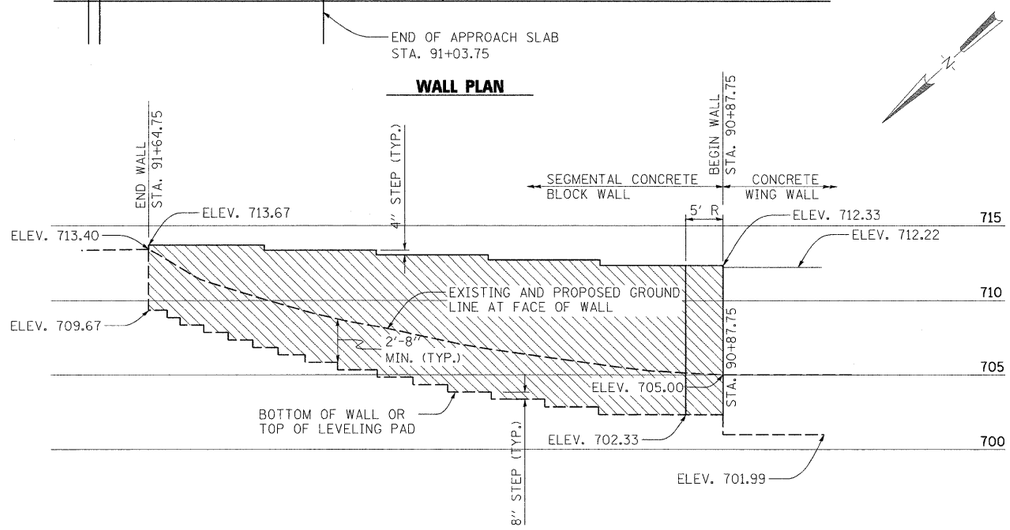

WALL ELEVATION (LOOKING NORTH)

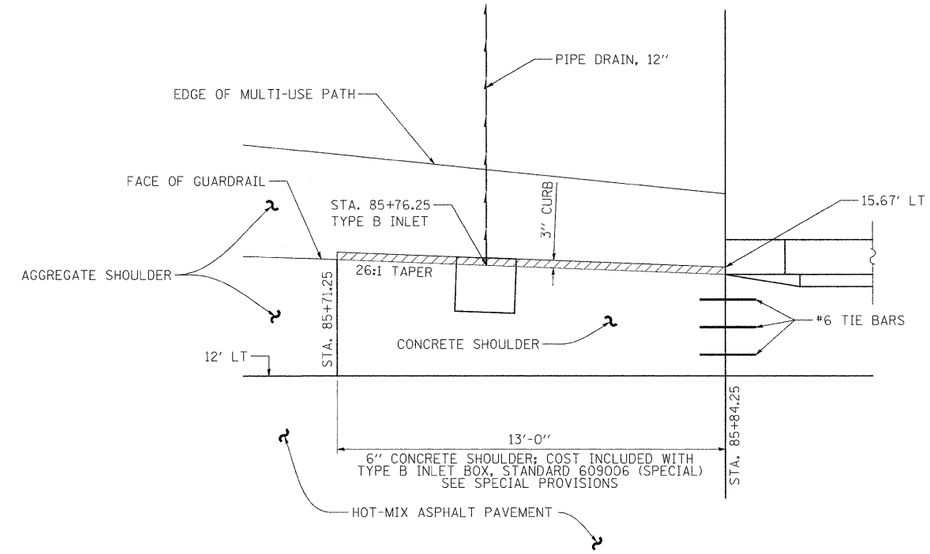

DRAINAGE DETAIL (SOUTH EAST CORNER)

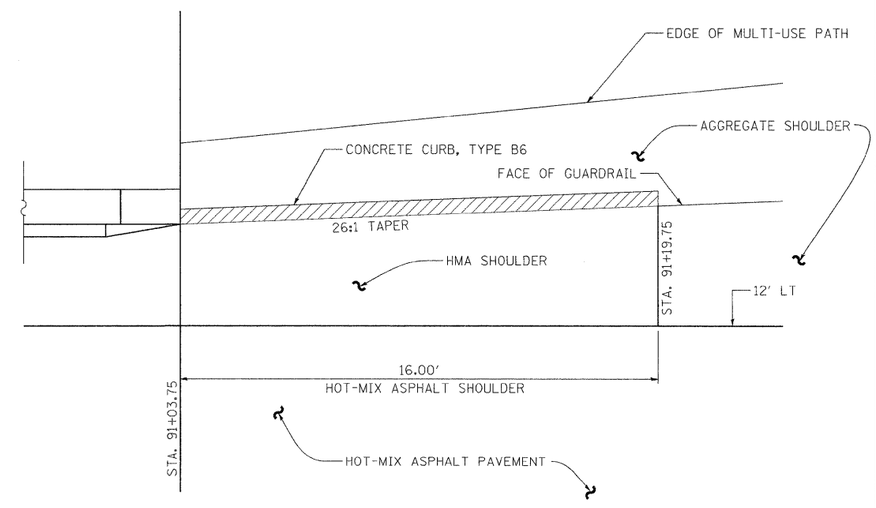

DRAINAGE DETAIL (SOUTH WEST CORNER)

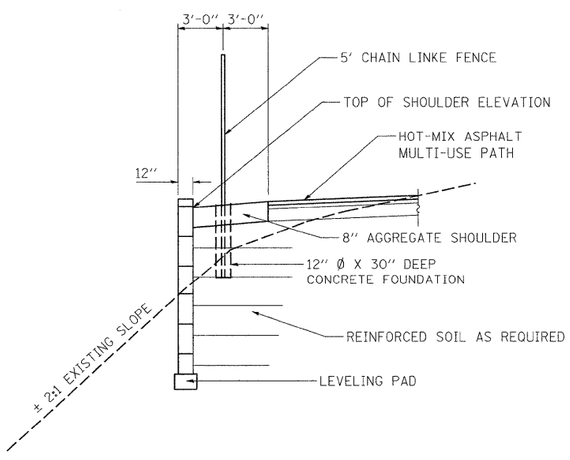

SECTION A-A

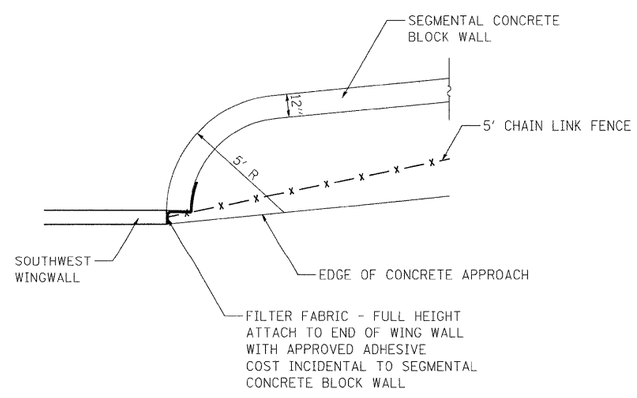

DETAIL "B"

© Copyright Hanson Professional Services Inc. 2010

HANSON

FILE NAME = C-503-MISC_DET.dgn	USER NAME =	DESIGNED -	REVISED -	STATE OF ILLINOIS DEPARTMENT OF TRANSPORTATION	MISCELANEOUS ROADWAY DETAILS KISHWAUKEE RIVER BRIDGE WINNEBAGO COUNTY, ILLINOIS	F.A.U. RTE.	SECTION	COUNTY	TOTAL SHEETS	SHEET NO.
		DRAWN -	REVISED -			5103	03-00337-00-BR	WINNEBAGO	66	10
MODEL NAME =	PLOT SCALE =	CHECKED -	REVISED -					CONTRACT NO. 85523		
	PLOT DATE = 10/26/2010	DATE -	REVISED -		SCALE: SHEET NO. OF SHEETS STA. TO STA.	FED. ROAD DIST. NO.	ILLINOIS	FED. AID PROJECT		

LAYOUT / DRAWN / REVIEWED

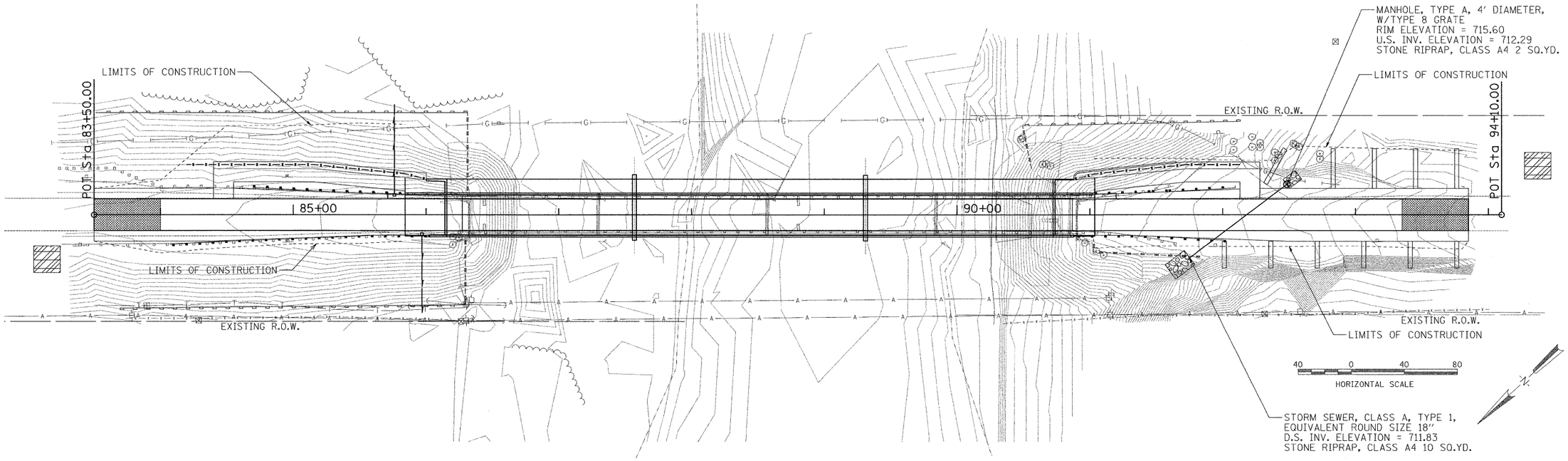

© Copyright Hanson Professional Services Inc. 2010

HANSON

GENERAL

1. THE EROSION CONTROL PLANS ARE INCLUDED TO DIRECT THE CONTRACTOR IN THE PLACEMENT OF THE TEMPORARY EROSION CONTROL SYSTEMS.

2. PLACEMENT AND MAINTENANCE OF TEMPORARY EROSION CONTROL SYSTEMS WILL BE UTILIZED THROUGHOUT THE CONSTRUCTION WORK ZONE AS SOON AS POSSIBLE TO STABILIZE EXPOSED SOILS AND PREVENT ON-SITE DAMAGE. THIS WORK MAY BE CONSTRUCTED OF HAY OR STRAW BALES, SILT FILTER FENCE, SEEDING, OR OTHER APPROPRIATE METHODS AND MATERIALS, SEPARATELY OR IN COMBINATION AS APPROVED BY THE RESIDENT ENGINEER.

3. EROSION CONTROL DEVICES SHALL BE IN PLACE AND APPROVED BY THE RESIDENT ENGINEER AS TO PROPER PLACEMENT AND INSTALLATION PRIOR TO BEGINNING OTHER WORK.

4. THE RESIDENT ENGINEER WILL DETERMINE WHEN TEMPORARY EROSION CONTROL SYSTEMS SHOWN ON THE PLAN MAY BE MOVED TO A DIFFERENT LOCATION OR DELETED.

5. THE WORK SHALL BE COMPLETED IN ACCORDANCE WITH SECTION 280-TEMPORARY EROSION CONTROL OF THE STANDARD SPECIFICATIONS FOR ROAD AND BRIDGE CONSTRUCTION.

6. THE CONTRACTOR SHALL PERFORM ALL WORK AS DIRECTED BY THE RESIDENT ENGINEER AND AS SHOWN IN STANDARD 280001, OR IN THESE PLANS.

7. TEMPORARY EROSION CONTROL SYSTEMS ARE NOTED ON THE EROSION CONTROL PLAN. THE PLAN MAY INCLUDE BUT NOT LIMITED TO THE FOLLOWING:
   - TEMPORARY DITCH CHECKS
   - PERIMETER EROSION BARRIER
   - INLET AND PIPE PROTECTION
   - TEMPORARY EROSION CONTROL SEEDING
   - EROSION CONTROL BLANKET

8. THE EROSION CONTROL PLAN INCLUDES WEEKLY INSPECTIONS TO BE COMPLETED BY THE CONTRACTOR AND RESIDENT ENGINEER.

9. IN THE EVENT OF HIGH WATER AND/OR HIGH FLOW RATES THAT DAMAGE THE PERIMETER EROSION AND SEDIMENT CONTROLS, THE CONTRACTOR SHALL BE RESPONSIBLE FOR REPAIRING EROSION CONTROLS AND FOR RETRIEVING ANY CONTROLS THAT HAVE BEEN WASHED DOWNSTREAM.

10. STRAW BALES ARE NOT ALLOWED FOR ANY USE EXCEPT FOR CONCRETE TRUCK CLEAN UP.

11. SILT FENCING IS NOT ALLOWED FOR USE IN DITCH CHECKS.

PRIOR TO CONSTRUCTION

1. PRIOR TO PERFORMING CONSTRUCTION ACTIVITIES RESULTING IN LAND DISTURBANCE, THE CONTRACTOR SHALL INSTALL ITEMS (IF SPECIFIED ON THE PLANS OR AS DIRECTED BY THE RESIDENT ENGINEER) INTENDED TO PREVENT SEDIMENT FROM LEAVING THE CONSTRUCTION SITE. THE ITEMS MAY INCLUDE THE FOLLOWING:
   - TEMPORARY DITCH CHECKS
   - INLET AND PIPE PROTECTION
   - PERIMETER EROSION BARRIER

DURING CONSTRUCTION

1. DURING CONSTRUCTION, THE CONTRACTOR SHALL:
   - CLEAN UP AND GRADE THE WORK AREA TO ELIMINATE CONCENTRATION OF RUNOFF.
   - INSTALL TEMPORARY DITCH CHECKS AT LOCATIONS SPECIFIED IN THE PLANS OR AS DIRECTED BY THE RESIDENT ENGINEER.
   - INSTALL INLET AND PIPE PROTECTION AT LOCATIONS SPECIFIED IN THE PLAN OR AS DIRECTIED BY THE RESIDENT ENGINEER.
   - COVER THE OPEN ENDS OF PIPES IN TRENCHES AT THE CLOSE OF EACH WORKING DAY.
   - PERFORM TEMPORARY EROSION CONTROL SEEDING AS SPECIFIED IN ARTICLE 280.04(f) OF THE STANDARD SPECIFICATIONS FOR ROAD AND BRIDGE CONSTRUCTION OR AS DIRECTED BY THE RESIDENT ENGINEER. TEMPORARY EROSION CONTROL SEEDING, SHALL ONLY BE PLACED ON AREAS EXPECTED TO REMAIN UNDISTURBED FOR GREATER THAN 21 CONTINUOUS DAYS.

2. THE CONTRACTOR SHALL MAINTAIN OR REPLACE (IF SPECIFIED BY THE RESIDENT ENGINEER) SEDIMENT CONTROL ITEMS:
   - THE TEMPORARY EROSION CONTROL SYSTEMS INSTALLED BY THE CONTRACTOR SHALL BE PROPERLY MAINTAINED AS DIRECTED BY THE RESIDENT ENGINEER AT ALL TIMES DURING THE PROJECT. THIS WORK SHALL INCLUDE REPAIR OF THE VARIOUS SYSTEMS, AND REMOVAL OF TRAPPED SEDIMENT.
   - IF THE CONTRACTOR FAILS TO MAINTAIN THE TEMPORARY EROSION CONTROL SYSTEMS AS DIRECTED BY THE RESIDENT ENGINEER, THE RESIDENT ENGINEER MAY AT THE EXPIRATION OF A PERIOD OF 48 HOURS, AFTER HAVING GIVEN THE CONTRACTOR WRITTEN NOTICE, PROCEED TO MAINTAIN THE SYSTEMS AS DEEMED NECESSARY, AND THE COST THEREOF WILL BE DEDUCTED FROM ANY COMPENSATION DUE, OR WHICH MAY BECOME DUE TO THE CONTRACTOR UNDER THIS CONTRACT.

PRIOR TO LANDSCAPING/RESTORATION

1. IMMEDIATELY PRIOR TO LANDSCAPING/RESTORATION WORK, THE CONTRACTOR SHALL:
   - REMOVE AND DISPOSE OF SILT RETAINED BY THE TEMPORARY DITCH CHECKS, REINSTALL THE TEMPORARY DITCH CHECKS AFTER CLEANING, AND REMOVE AND REPLACE PLUGGED OR DAMAGED HAY OR STRAW BALES.
   - REMOVE AND DISPOSE OF SILT RETAINED BY THE PERIMETER EROSION BARRIER, REINSTALL THE PERIMETER EROSION BARRIER AFTER CLEANING, AND REMOVE AND REPLACE PLUGGED OR DAMAGED SILT FILTER FENCE.

FOLLWING LANDSCAPING/RESTORATION

1. AFTER LANDSCAPING/RESTORATION WORK, THE CONTRACTOR SHALL MAINTAIN OR REPLACE (IF SPECIFIED BY THE RESIDENT ENGINEER) SEDIMENT CONTROL ITEMS.

VEGETATION ESTABLISHED

1. AFTER THE VEGETATION IS ESTABLISHED IN THE DISTURBED AREA, THE CONTRACTOR SHALL:
   - REMOVE THE REMAINING SEDIMENT CONTROL ITEMS AS DIRECTED BY THE RESIDENT ENGINEER.
   - RESTORE THE AREAS DISTURBED BY THE SEDIMENT CONTROL ITEMS BY PERMANENT SEEDING MEASURES.

INTENDED SEQUENCE

1. PLACE PERIMETER EROSION CONTROL BARRIER PRIOR TO COMMENCEMENT OF ANY WORK. SEE STD. 280001

2. CONSTRUCT EARTHWORK, INCLUDING DITCHES. (MAXIMUM 10 ACRES DISTURBED AT ONE TIME PRIOR TO SEEDING. SEE ART. 280).

3. PLACE AND MAINTAIN TEMPORARY AND PERMANENT EROSION CONTROLS AS WORK PROGRESSES, SEED EVERY 7 DAYS. SEE ART. 280.

4. FINAL SHAPE, GRADE, AND PAVE ROADWAY.

5. PLACE REMAINING PERMANENT EROSION CONTROLS.

LEGEND

- TEMPORARY DITCH CHECK
- INLET AND PIPE PROTECTION
- EROSION CONTROL BLANKET
- DITCH FLOW
- TYPE A EROSION CONTROL BARRIER INCLUDES ALL TYPES OF PERIMETER EROSION CONTROL MATERIALS
- TYPE B EROSION CONTROL BARRIER INCLUDES ONLY THOSE TYPES OF EROSION CONTROL MATERIALS THAT DO NOT DISTURB THE SOIL FOR INSTALLATION
- CONCRETE TRUCK CLEAN OUT
- STABILIZED CONSTRUCTION ENTRANCE

FILE NAME = C-101-ERO.dgn	USER NAME =	DESIGNED -	REVISED -
MODEL NAME =		DRAWN -	REVISED -
	PLOT SCALE =	CHECKED -	REVISED -
	PLOT DATE = 10/26/2010	DATE -	REVISED -

LAYOUT / DRAWN / REVIEWED

STATE OF ILLINOIS
DEPARTMENT OF TRANSPORTATION

EROSION CONTROL PLAN
KISHWAUKEE RIVER BRIDGE
WINNEBAGO COUNTY, ILLINOIS

SCALE: | SHEET NO. OF SHEETS | STA. TO STA.

F.A.U. RTE.	SECTION	COUNTY	TOTAL SHEETS	SHEET NO.
5103	03-00337-00-BR	WINNEBAGO	66	11

CONTRACT NO. 85523

FED. ROAD DIST. NO. | ILLINOIS | FED. AID PROJECT

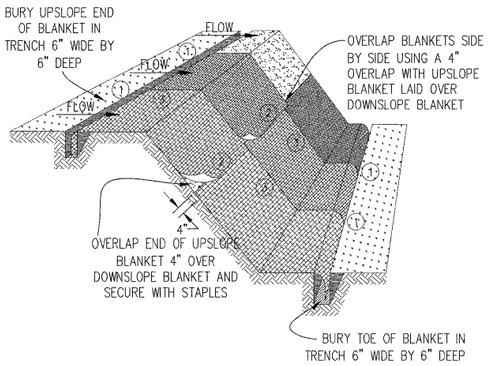

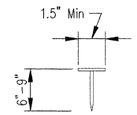

PUSH PIN DETAIL

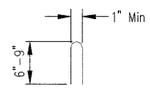

STAPLE DETAIL

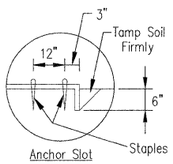

DETAIL 1

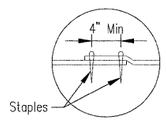

DETAIL 2

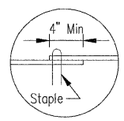

DETAIL 3

NOTES:

1. Staples shall be placed in a diamond pattern at 2 per s.y. for stitched blankets. Non-stitched shall use 4 staples per s.y. of material. This equates to 200 staples with stitched blanket and 400 staples with non-stitched blanket per 100 s.y. of material.
2. Staple or push pin lengths shall be selected based on soil type and conditions. (minimum staple length is 6")
3. Erosion control material shall be placed in contact with the soil over a prepared seedbed.
4. All anchor slots shall be stapled at approximately 12" intervals.

EROSION CONTROL BLANKET INSTALLATION DETAILS

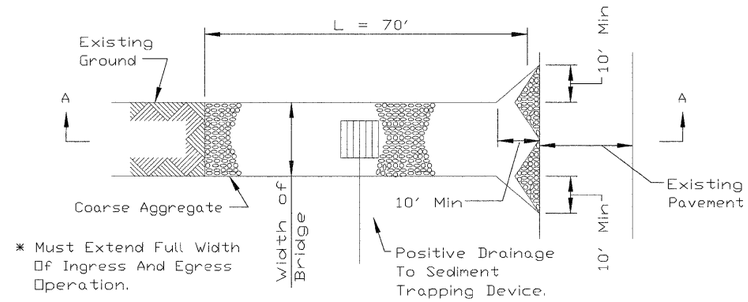

PLAN VIEW

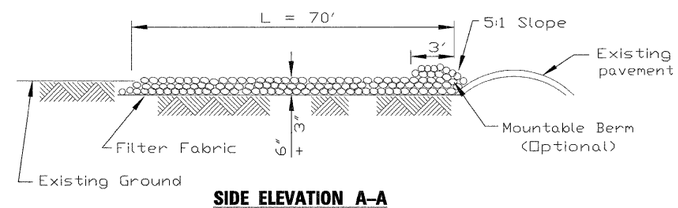

SIDE ELEVATION A-A

NOTES:

1. Filter fabric shall meet the requirements of article 1080.03 of the Standard specifications, gradation 4 & 5, and shall be placed over the cleared area prior to the placing of rock.
2. Rock or reclaimed concrete shall meet one of the following IDOT coarse aggregate gradation, CA-1, CA-2, CA-3 or CA-4 and be placed according to articles 351.05 and 351.07

III

STABILIZED CONSTRUCTION ENTRANCE PLAN

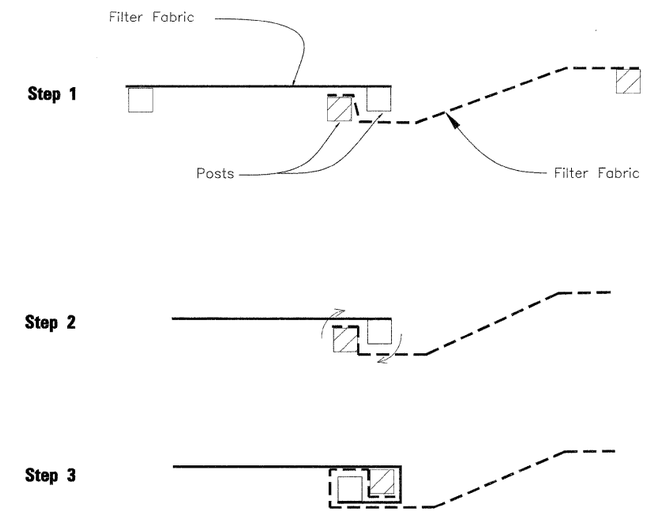

ATTACHING TWO SILT FENCES

NOTES:

1. Place the end post of the second fence inside the end post of the first fence.
2. Rotate both posts at least 180 degrees in a clockwise direction to create a tight seal with the fabric material.
3. Drive both posts a minimum of 18 inches into the ground and bury the flap.

SILT FENCE

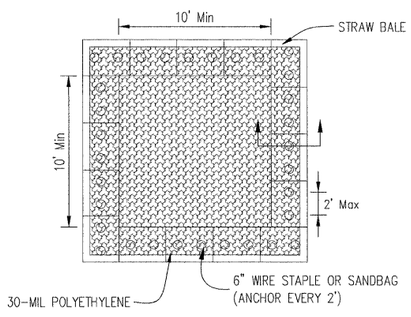

PLAN VIEW

NOTES:

1. Maintaining temporary concrete washout facilities shall include removing and disposing of hardend concrete and/or slurry and returning the washout to a functional condition at the end of the project.
2. Washout shall be cleaned or reconstructed in a new area once washout becomes two-thirds full.
3. Each straw bale is to be staked in place using (2) 2"x2"x4' wooden stakes.

TEMPORARY CONCRETE WASHOUT FACILITY - STRAW BALE

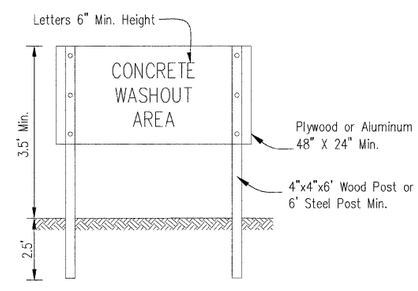

SIGN DETAIL

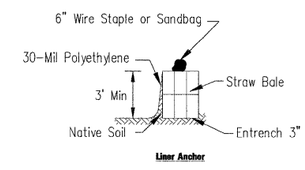

STRAW BALE ANCHOR SECTIONS

© Copyright Hanson Professional Services Inc. 2010

HANSON

FILE NAME = C-102-ERO.dgn	USER NAME =	DESIGNED -	REVISED -	STATE OF ILLINOIS DEPARTMENT OF TRANSPORTATION	EROSION CONTROL PLAN (DETAILS) KISHWAUKEE RIVER BRIDGE WINNEBAGO COUNTY, IL	F.A.U. RTE.	SECTION	COUNTY	TOTAL SHEETS / SHEET NO.
		DRAWN -	REVISED -			5103	03-00337-00-BR	WINNEBAGO	66 / 12
MODEL NAME =	PLOT SCALE =	CHECKED -	REVISED -					CONTRACT NO. 85523	
	PLOT DATE = 10/26/2010	DATE -	REVISED -		SCALE: SHEET NO. OF SHEETS STA. TO STA.	FED. ROAD DIST. NO.	ILLINOIS	FED. AID PROJECT	

LAYOUT / DRAWN / REVIEWED

DITCH CHECK INSTALLATION

GEOTEXTILE TUBE FILLED WITH AGGREGATE

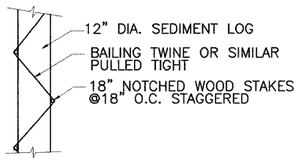

SEDIMENT LOG PLAN VIEW
NTS

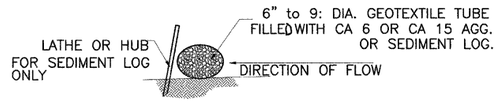

ROC-SOC OR ROCK FILLED TUBE
NTS

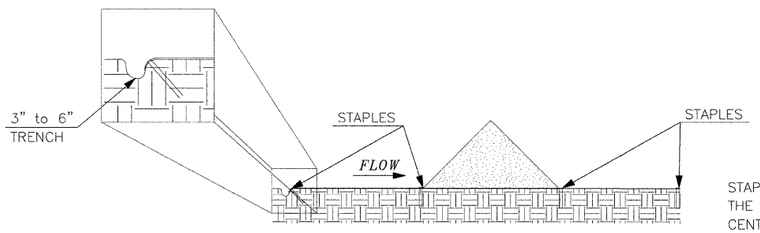

STAPLES SHALL BE PLACED WHERE THE UNITS OVERLAP AND IN THE CENTER OF THE 7' UNIT.

TRIANGULAR DITCH CHECK

SEDIMENT BARRIERS FOR CONCENTRATED FLOWS

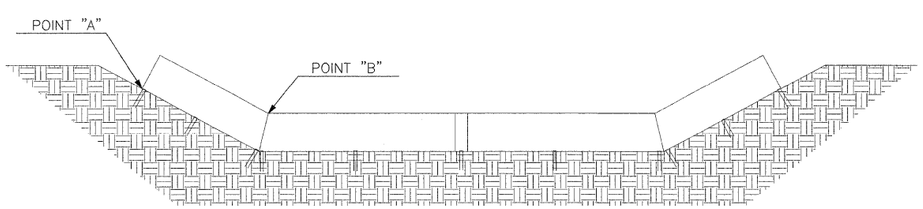

POINT "A" MUST BE 6" HIGHER THAN POINT "B" TO ENSURE THAT WATER FLOWS OVER THE DIKE AND NOT AROUND THE ENDS.

GENERAL LAYOUT OF DITCH CHECKS

© Copyright Hanson Professional Services Inc. 2010

HANSON

FILE NAME = C-102-ER0.dgn	USER NAME =	DESIGNED -	REVISED -
MODEL NAME =		DRAWN -	REVISED -
	PLOT SCALE =	CHECKED -	REVISED -
	PLOT DATE = 10/26/2010	DATE -	REVISED -

LAYOUT / DRAWN / REVIEWED

STATE OF ILLINOIS
DEPARTMENT OF TRANSPORTATION

EROSION CONTROL PLAN (DETAILS)
KISHWAUKEE RIVER BRIDGE
WINNEBAGO COUNTY, IL

SCALE: | SHEET NO. OF SHEETS | STA. TO STA.

F.A.U. RTE.	SECTION	COUNTY	TOTAL SHEETS	SHEET NO.
5103	03-00337-00-BR	WINNEBAGO	66	13

CONTRACT NO. 85523

FED. ROAD DIST. NO. | ILLINOIS | FED. AID PROJECT

© Copyright Hanson Professional Services Inc. 2010

HANSON

5

DETOUR

M4-8 (24"X12")

KISHWAUKEE ROAD

4.2 — 32.8 — 4 — 13.8 — 4.2 (59); 4 4 4 12

3.0" Radius, 1.0" Border, Black on Orange;
(KISHWAUKEE ROAD) D;

6

DETOUR

M4-8 (24"X12")

W16-5P (24"X18")

KISHWAUKEE ROAD

4.7 — 32.8 — 4 — 13.8 — 4.7 (60); 4 4 4 12

3.0" Radius, 1.0" Border, Black on Orange;
(KISHWAUKEE ROAD) D;

7

DETOUR

M4-8 (24"X12")

W16-5P (24"X18")

KISHWAUKEE ROAD

4.7 — 32.8 — 4 — 13.8 — 4.7 (60); 4 4 4 12

3.0" Radius, 1.0" Border, Black on Orange;
(KISHWAUKEE ROAD) D;

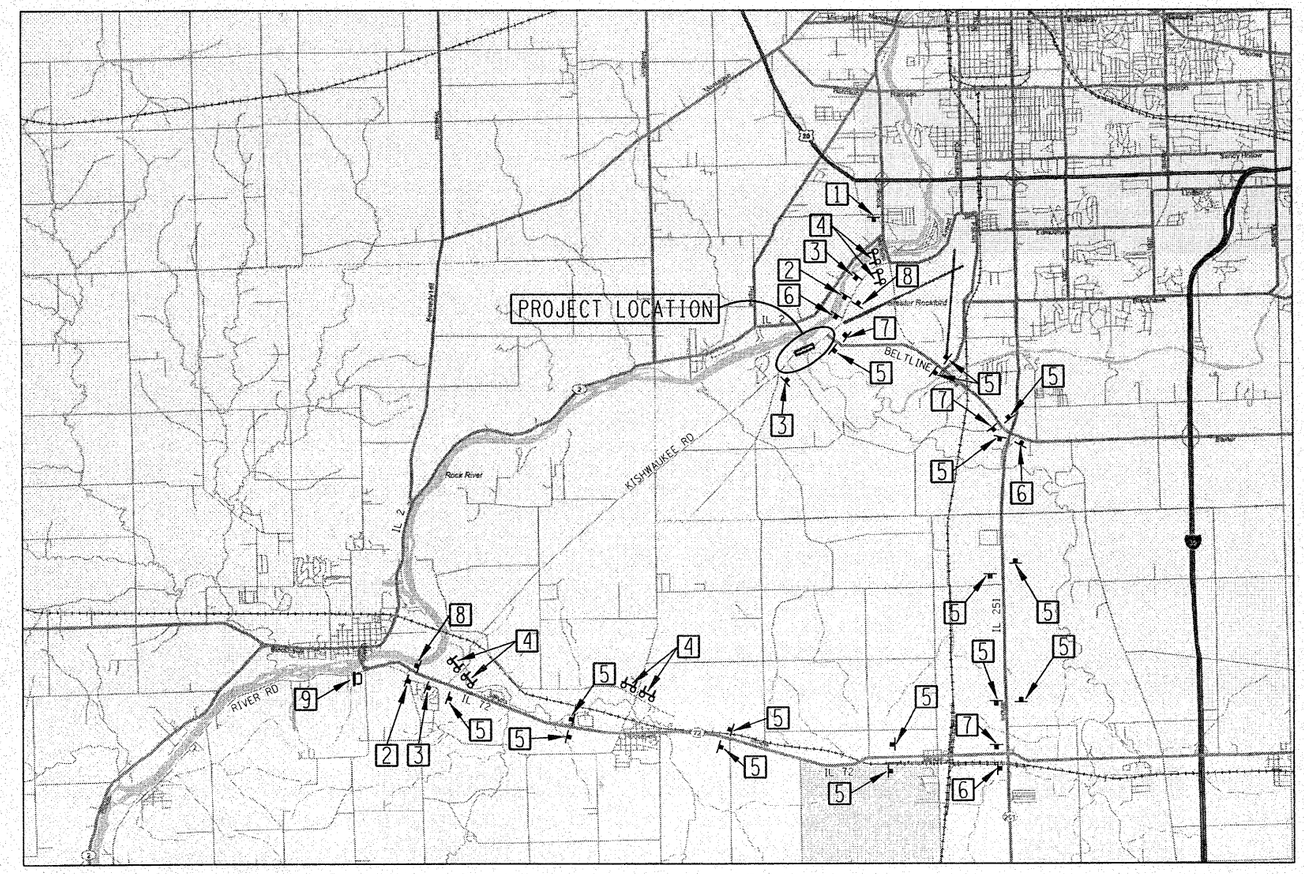

LOCATION MAP

N

SCALE: MILES

1

KISHWAUKEE RD
CLOSED AT
KISHWAUKEE RIVER

8.5 — 32.7 — 4 — 6.3 — 8.5
15.1 — 19.7 — 4 — 6.1 — 15.1
4.3 — 32.7 — 4 — 14.7 — 4.3 (60); 3 4 3 4 3 4 3 (24)

3.0" Radius, 1.0" Border, Black on Orange;
(KISHWAUKEE RD) D; (CLOSED AT) D;
(KISHWAUKEE RIVER) D;

TYPE B FLASHER

2

DETOUR
AHEAD

W20-2 (48"X48")

3

ROAD
CLOSED
AHEAD

W20-3 (48"X48")

KISHWAUKEE RD AT
KISHWAUKEE RIVER

6.5 — 32.7 — 4 — 6.3 — 4 — 6 — 6.5
6.8 — 32.8 — 5 — 14.6 — 6.8 (66); 6 4 4 4 6 (24)

3.0" Radius, 1.0" Border, Black on Orange;
(KISHWAUKEE RD AT) D; (KISHWAUKEE RIVER) D;

9

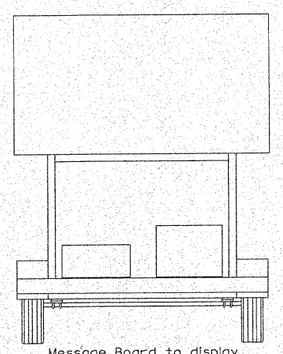

Message Board to display
sign 1 message.

8

END
DETOUR

W4-8a (24"X18")

4

ROAD CLOSED
XX MILES AHEAD
LOCAL TRAFFIC ONLY

R11-3a (60"X30")

FILE NAME = C-504-DET.dgn	USER NAME =	DESIGNED - DPA	REVISED -	STATE OF ILLINOIS DEPARTMENT OF TRANSPORTATION	DETOUR ROUTE KISHWAUKEE RIVER BRIDGE WINNEBAGO COUNTY, IL	F.A.U. RTE.	SECTION	COUNTY	TOTAL SHEETS	SHEET NO.
MODEL NAME =		DRAWN - JDM	REVISED -			5103	03-00337-00-BR	WINNEBAGO	66	14
	PLOT SCALE =	CHECKED - DPA	REVISED -					CONTRACT NO. 85523		
	PLOT DATE =	DATE - 11/08/10	REVISED -		SCALE: / SHEET NO. OF SHEETS / STA. TO STA.	FED. ROAD DIST. NO. 2	ILLINOIS	FED. AID PROJECT		

© Copyright Hanson Professional Services Inc. 2010

HANSON

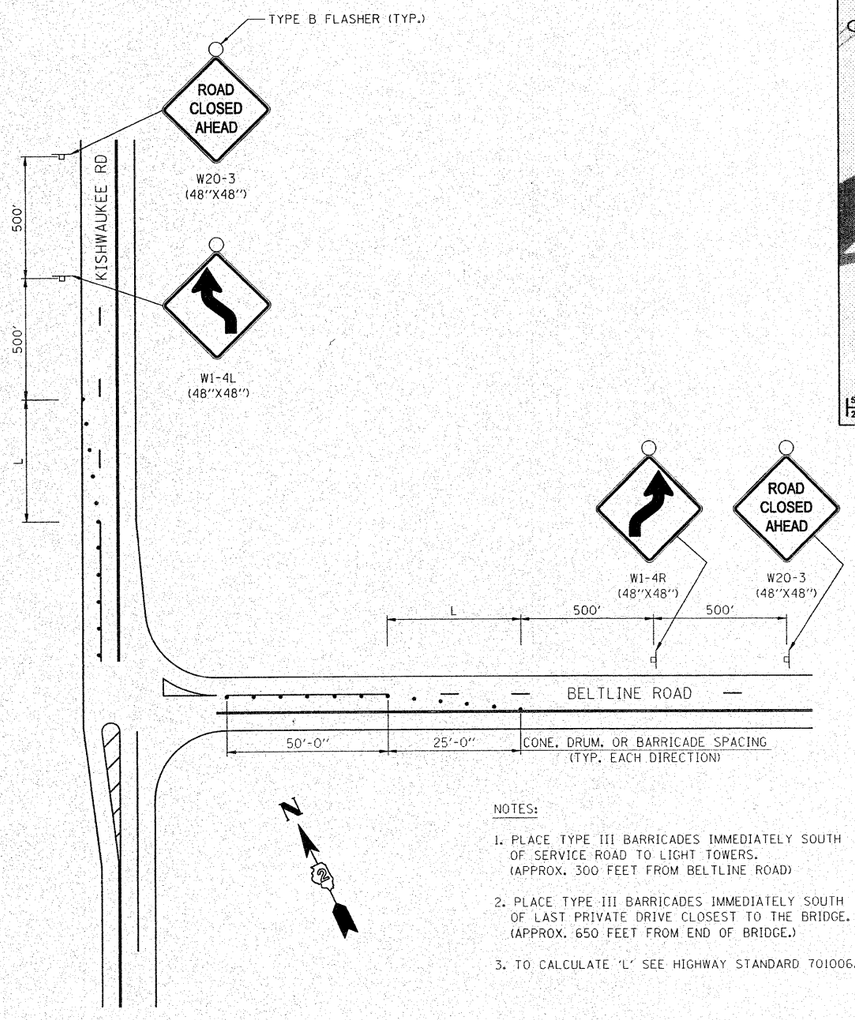

NOTES:

1. PLACE TYPE III BARRICADES IMMEDIATELY SOUTH OF SERVICE ROAD TO LIGHT TOWERS. (APPROX. 300 FEET FROM BELTLINE ROAD)

2. PLACE TYPE III BARRICADES IMMEDIATELY SOUTH OF LAST PRIVATE DRIVE CLOSEST TO THE BRIDGE. (APPROX. 650 FEET FROM END OF BRIDGE.)

3. TO CALCULATE 'L' SEE HIGHWAY STANDARD 701006.

KISHWAUKEE RD./BELTLINE RD. INTERSECTION DETAIL

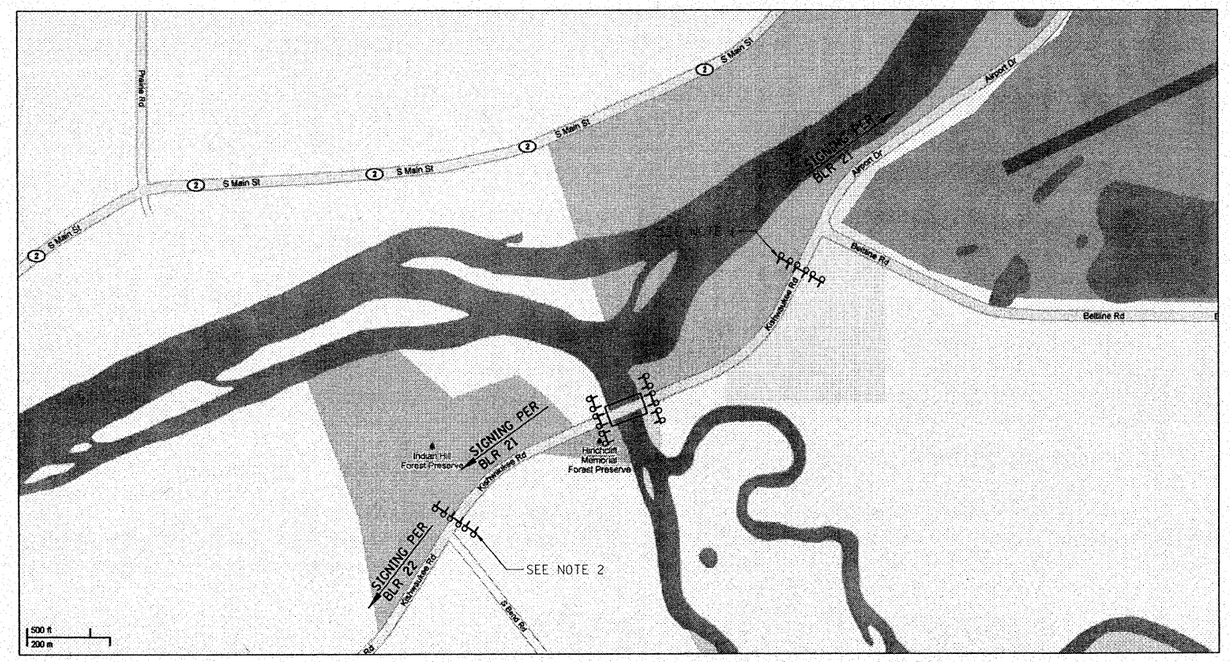

ROAD CLOSURE DETAIL

FILE NAME = C-505-DET.dgn	USER NAME =	DESIGNED - DPA	REVISED -
		DRAWN - JDM	REVISED -
MODEL NAME =	PLOT SCALE =	CHECKED - DPA	REVISED -
	PLOT DATE =	DATE - 11/08/10	REVISED -

STATE OF ILLINOIS
DEPARTMENT OF TRANSPORTATION

ROAD CLOSURE DETAIL
KISHWAUKEE RIVER BRIDGE
WINNEBAGO COUNTY, IL

SCALE: | SHEET NO. OF SHEETS | STA. TO STA.

F.A.U. RTE.	SECTION	COUNTY	TOTAL SHEETS	SHEET NO.
5103	03-00337-00-BR	WINNEBAGO	66	15
		CONTRACT NO. 85523		

FED. ROAD DIST. NO. 2 | ILLINOIS | FED. AID PROJECT

Existing Structure: Structure Number 101-3018 consists of a four-span, riveted, steel plate girder bridge built in 1950. The existing structure is 462'-0" long and 29'-6" wide. The substructure consists of spill-through concrete abutments and reinforced concrete wall-type piers with footings founded on timber piles. The existing structure shall be completely removed, unless noted otherwise. Kishwaukee Road will be closed during construction.

Salvage: Existing Name Plate to be salvaged and delivered to Winnebago Coounty Highway Dept.

Bench Marks: Railroad spike in power pole Station 83+78.50, 75.30 ft. Rt., Elev. 687.86

LOADING HS25

Allow 50 #/sq. ft. for future wearing surface.

DESIGN SPECIFICATIONS

2002 AASHTO Standard Specifications for Highway Bridges

1999 AASHTO Guide for the Development of Bicycle Facilities

DESIGN STRESSES

FIELD UNITS

f'c = 3,500 psi
fy = 60,000 psi (reinforcement)
fy = 50,000 psi (AASHTO M270 Gr. 50)

SEISMIC DATA

Seismic Performance Category (SPC) = A
Bedrock Acceleration Coefficient (A) = 0.035g
Site Coefficient (S) = 1.0

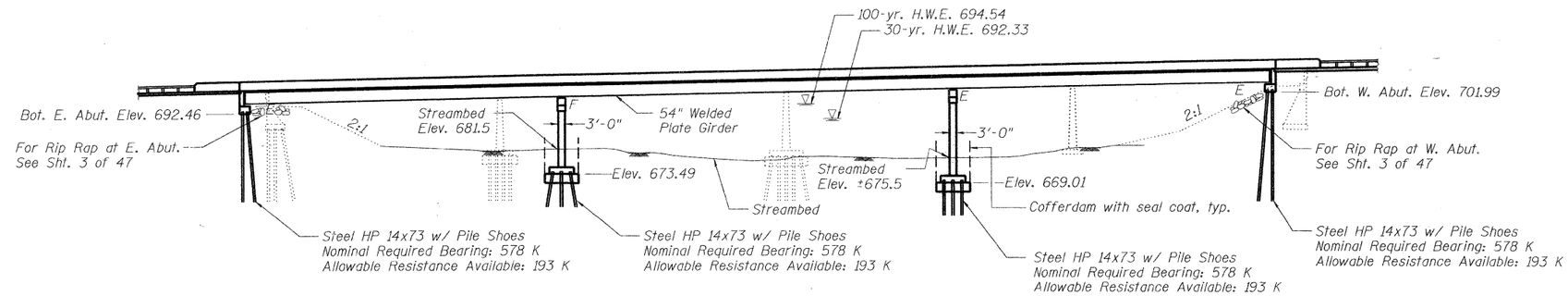

ELEVATION

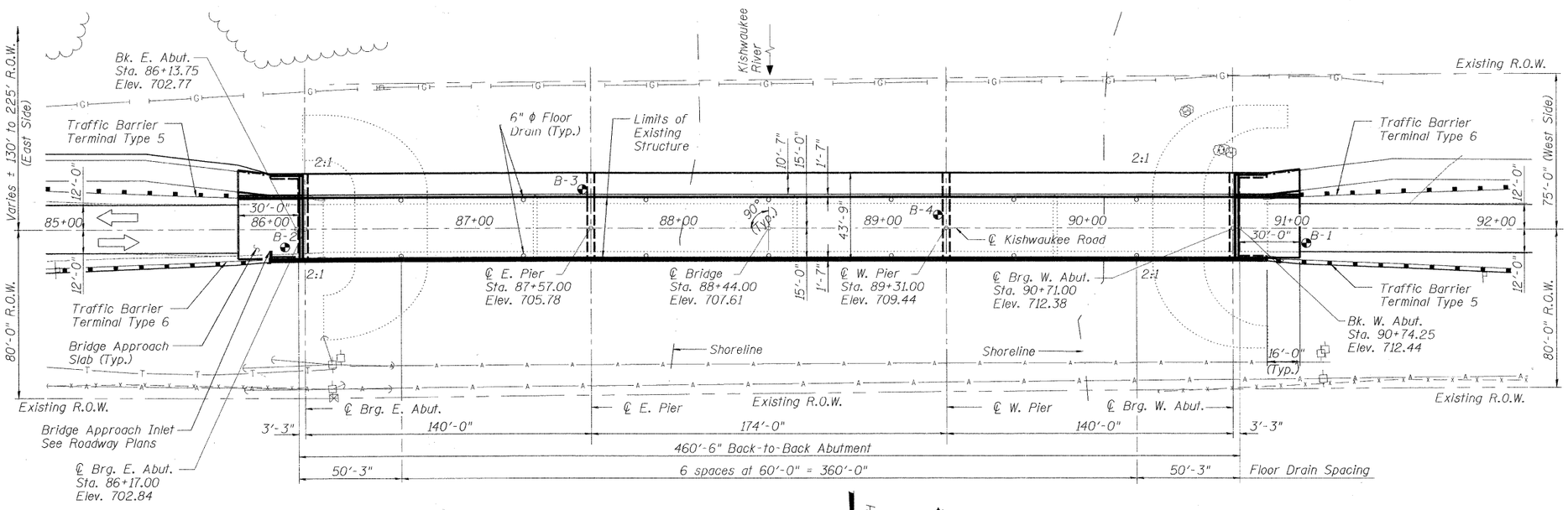

PLAN

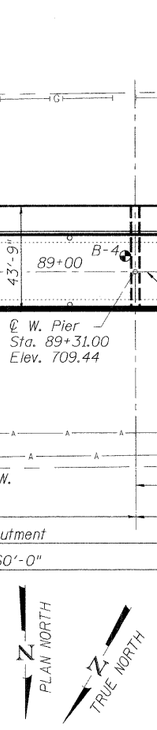

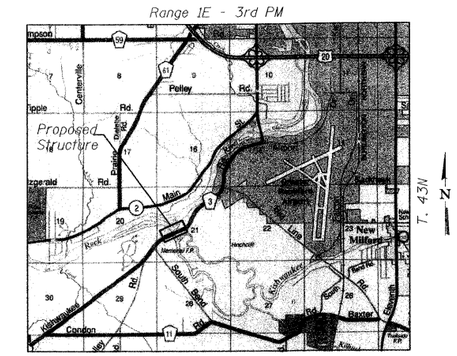

LOCATION SKETCH

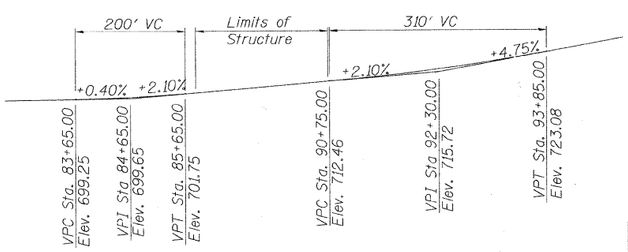

PROFILE GRADE

KISHWAUKEE ROAD

WATERWAY INFORMATION

Drainage Area = 1257 sq. mi. Low Grade Elev. 699.21 ft. @ Sta. 83+50

Flood	Freq. Yr.	Q C.F.S.	Opening Sq. Ft. Exist.	Opening Sq. Ft. Prop.	Nat. H.W.E.	Head-Ft. Exist.	Head-Ft. Prop.	Headwater El. Exist.	Headwater El. Prop.
Design	30	24,200	4895	5023	692.33	-0.10	-0.14	692.23	692.19
Base	100	32,100	5700	5916	694.54	-0.16	-0.23	694.38	694.31

DESIGN SCOUR ELEVATION TABLE

	E. Abut.	E. Pier	W. Pier	W. Abut.
Design Scour Elev. (ft)	692.5	670.5	664.0	702.0

"I certify that to the best of my knowledge, information and belief, this bridge design is structurally adequate for the design loading shown on the plans. The design is an economical one for the style of structure and complies with requirements of the current 'AASHTO Standard Specifications for Highway Bridges.'"

LICENSED STRUCTURAL ENGINEER
STUART M. KEMP
081-00-4897
STATE OF ILLINOIS

Stuart M. Kemp
SIGNATURE
10/26/10
DATE
LIC. EXP. DATE: 11/30/10

GENERAL PLAN & ELEVATION
STRUCTURE NUMBER 101-3100

PROFESSIONAL DESIGN FIRM LICENSE #184-001084

© Copyright Hanson Professional Services Inc. 2010

HANSON
Hanson Professional Services Inc.

JOB NO. 03R1807
DATE 10/26/10

SHEET NO. 1
47 SHEETS

F.A.U. RTE.	SECTION	COUNTY	TOTAL SHEETS	SHEET NO.
5103	03-00337-00-BR	Winnebago	66	16

CONTRACT NO. 85523

ILLINOIS FED. AID PROJECT

LAYOUT	A.R.F./S.M.K.	08/23/10
DRAWN	M.G.M.	10/25/10
REVIEWED	A.R.F./S.M.K.	10/26/10

10/27/2010
I:\03Jobs\03R807\StructSheets\S-03X-GPNE.dgn

GENERAL NOTES

Fasteners shall be AASHTO M164 Type 1, mechanically galvanized bolts. Bolts $\frac{7}{8}$" ϕ, holes $\frac{15}{16}$" ϕ, unless otherwise noted.

Calculated weight of Structural Steel = 856,130 lbs (AASHTO M270 Grade 50)
Calculated weight of Structural Steel = 37,080 lbs (AASHTO M270 Grade 36)

Field welding of construction accessories will not be permitted to beams or girders.

Reinforcement bars shall conform to the requirements of ASTM A706, Grade 60. See Special Provisions.

Reinforcement bars designated (E) shall be epoxy coated.

Bearing seat surfaces shall be constructed or adjusted to the designated elevations within a tolerance of $\frac{1}{8}$ inch. Adjustment shall be made either by grinding the surface or by shimming the bearing.

Concrete Sealer shall be applied to the abutment backwalls, bridge seats, and front face of caps.

Protective coat shall be applied to the entire top surface of the bridge deck, the top surface of the multi-use path, the top and inside face of the N. Parapet, and the top and both faces of the S. Parapet.

The inorganic Zinc Rich Primer / Acrylic / Acrylic Paint System shall be used for shop and field painting of new structural steel except where otherwise noted. The color of the final finish coat for all steel surfaces shall be reddish brown, Munsell No. 2.5YR 3/4. See Special Provision for Cleaning and Painting New Metal Structures.

The Contractor shall obtain a construction permit from the Illinois Department of Natural Resources (IDNR), Office of Water Resources for any temporary construction activity placed in the water, except cofferdams. This shall include the placement of material for run-arounds, causeways, etc. Any permit application by the Contractor shall refer to IDNR Floodway Construction permit number 3704 allowing permanent construction as shown on the contract plans.

Layout of the slope protection system may be varied to suit ground conditions in the field as directed by the Engineer.

INDEX OF SHEETS

1.	General Plan and Elevation
2.	General Notes and Bridge Bill of Materials
3.	Slope Protection Plan and Details
4 - 6.	Top of Bridge Slab Elevations
7.	Top of Approach Slab Elevations
8.	Superstructure
9 - 11.	Superstructure Details
12 - 13.	Bridge Approach Slab Details
14.	Strip Seal Expansion Joint
15 - 17.	Finger Plate Expansion Joint
18.	Bicycle and Parapet Railing
19.	Bicycle and Parapet Railing Details
20.	Structural Steel
21 - 22.	Structural Steel Details
23 - 24.	Bearing Details
25.	East Abutment
26 - 27.	East Abutment Details
28.	West Abutment
29 - 30.	West Abutment Details
31.	East Pier
32.	West Pier
33.	Bar Splicers
34.	Steel H-Pile Details
35 - 37.	Boring Logs
38 - 47.	Existing Bridge Drawings

TOTAL BILL OF MATERIAL

ITEM	UNIT	SUPER	SUB	TOTAL
Porous Granular Embankment, Special	Cu. Yd.	———	170.8	170.8
Stone Riprap, Class A4	Sq. Yd.	———	218	218
Stone Riprap, Class A5	Sq. Yd.	———	90	90
Filter Fabric	Sq. Yd.	———	308	308
Removal of Existing Structures	Each	1	———	1
Slope Wall Removal	Sq. Yd.	———	72	72
Structure Excavation	Cu. Yd.	———	330	330
Cofferdam Excavation	Cu. Yd.	———	425.0	425.0
Cofferdams (Pier 1)	Each	———	1	1
Cofferdams (Pier 2)	Each	———	1	1
Floor Drains	Each	14	———	14
Concrete Structures	Cu. Yd.	———	428.7	428.7
Concrete Superstructure	Cu. Yd.	774.1	———	774.1
Seal Coat Concrete	Cu. Yd.	———	151.1	151.1
Bridge Deck Grooving	Sq. Yd.	1601	———	1601
Concrete Encasement	Cu. Yd.	———	15.3	15.3
Protective Coat	Sq. Yd.	2928	———	2928
Furnishing and Erecting Structural Steel	L. Sum	1	———	1
Stud Shear Connectors	Each	4536	———	4536
Reinforcement Bars, Epoxy Coated	Pound	195,160	54,010	249,170
Bar Splicers	Each	———	91	91
Bicycle Railing	Foot	486.6	———	486.6
Parapet Railing	Foot	514.5	———	514.5
Furnishing Steel Piles, HP 14x73	Foot	———	2136	2136
Driving Piles	Foot	———	2136	2136
Test Pile Steel HP 14x73	Each	———	4	4
Pile Shoes	Each	———	65	65
Name Plates	Each	1	———	1
Preformed Joint Strip Seal	Foot	43.8	———	43.8
Finger Plate Expansion Joint 5"	Foot	43.8	———	43.8
Fabric Reinforced Elastomeric Trough	Foot	46.8	———	46.8
Elastomeric Bearing Assembly, Type II	Each	7	———	7
Elastomeric Bearing Assembly, Type III	Each	7	———	7
Anchor Bolts, 1"	Each	———	28	28
Anchor Bolts, 1 1/4"	Each	———	14	14
Anchor Bolts, 1 1/2"	Each	———	14	14
Concrete Sealer	Sq. Ft.	———	1017	1017
Geocomposite Wall Drain	Sq. Yd.	———	77	77
Pipe Underdrains for Structures 4"	Foot	———	184	184
High Load Multi-Rotation Bearings, Guided Expasion, 400K	Each	7	———	7

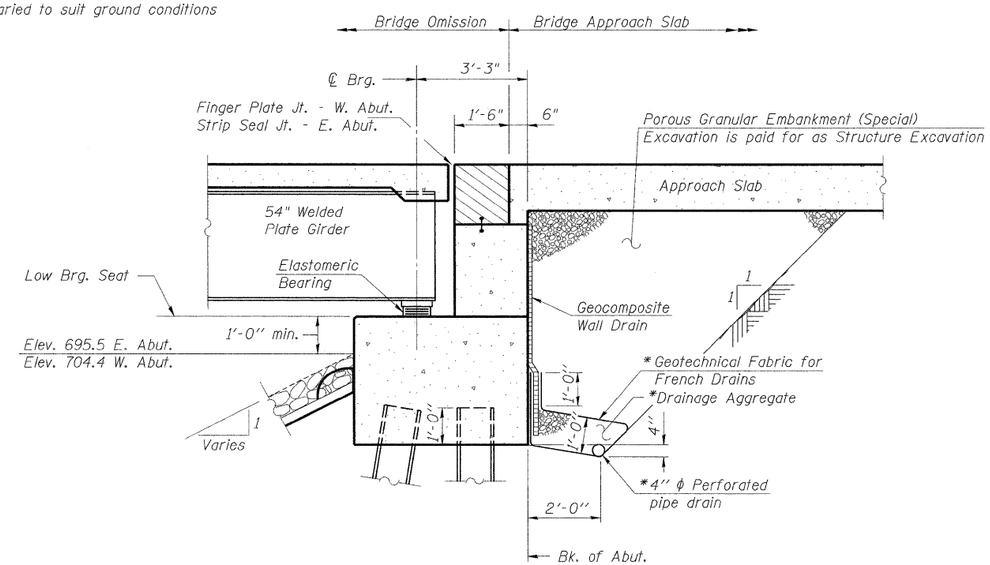

SECTION THRU ABUTMENT

* Included in the cost of Pipe Underdrains for Structures.

Note:
All drainage system components shall extend to the inside face of abutment wingwalls except an outlet pipe shall extend until intersecting with the side slopes. The pipes shall drain into concrete headwalls. (See Article 601.05 of the Standard Specifications and Highway Standard 601101).

PROFESSIONAL DESIGN FIRM LICENSE #184-001084

© Copyright Hanson Professional Services Inc. 2010

HANSON
Hanson Professional Services Inc.

JOB NO. 03R1807
DATE 10/26/10
SHEET NO. 2
47 SHEETS

GENERAL NOTES & DETAILS
STRUCTURE NUMBER 101-3100

F.A.U. RTE.	SECTION	COUNTY	TOTAL SHEETS	SHEET NO.
5103	03-00337-00-BR	Winnebago	66	17

CONTRACT NO. 85523
ILLINOIS FED. AID PROJECT

LAYOUT	JKR/SMR	08/23/10
DRAWN	MGM	10/25/10
REVIEWED	JKR/SMR	10/26/10

IDOT-BR-2010
/ACS/1068-02/PROP/Struct/Sheet/S-002-HotfixBOM.dgn

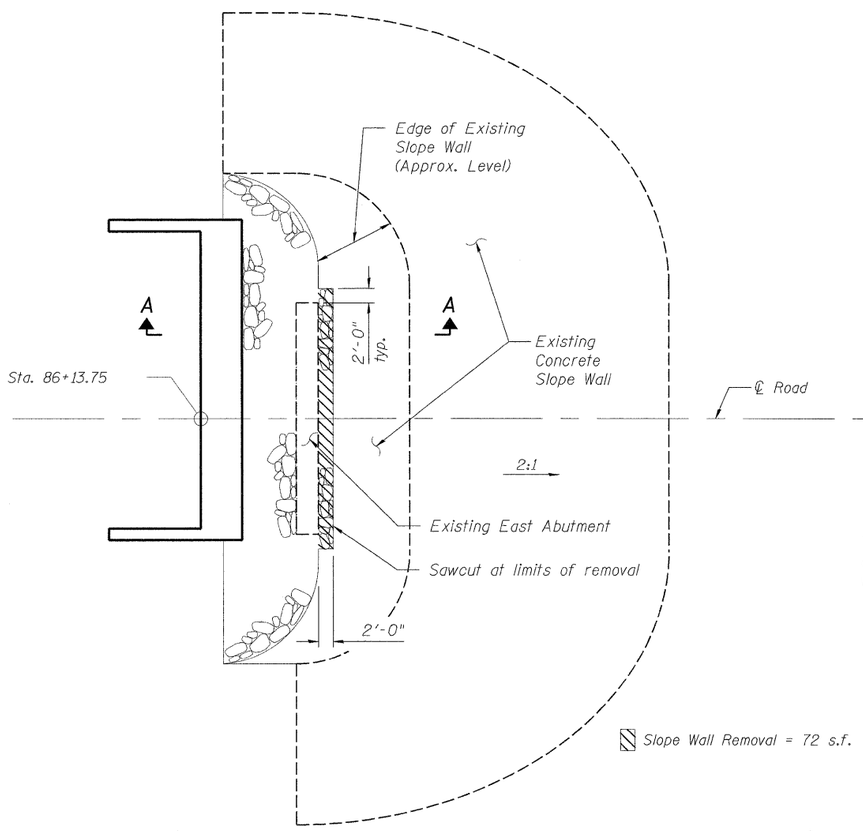

EAST SLOPE PROTECTION PLAN

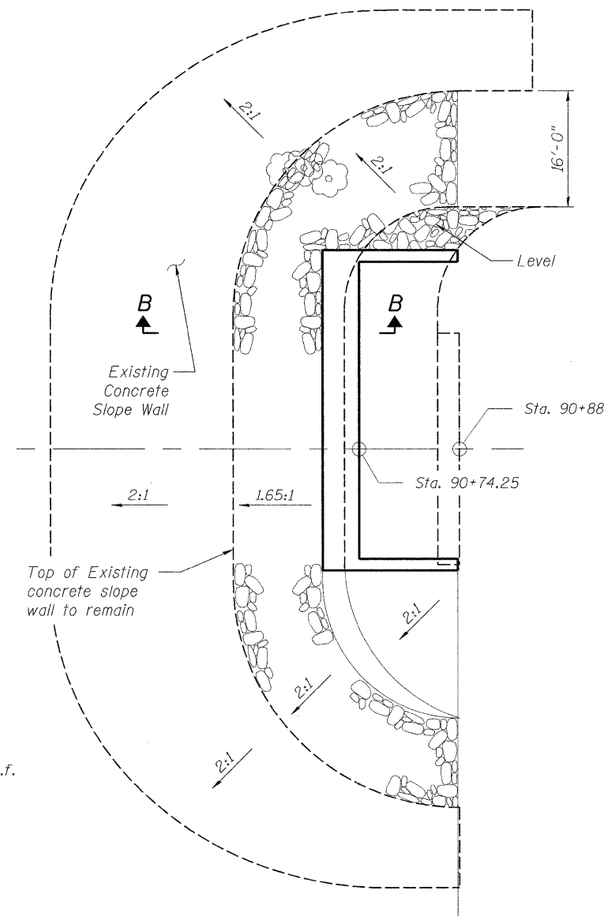

WEST SLOPE PROTECTION PLAN

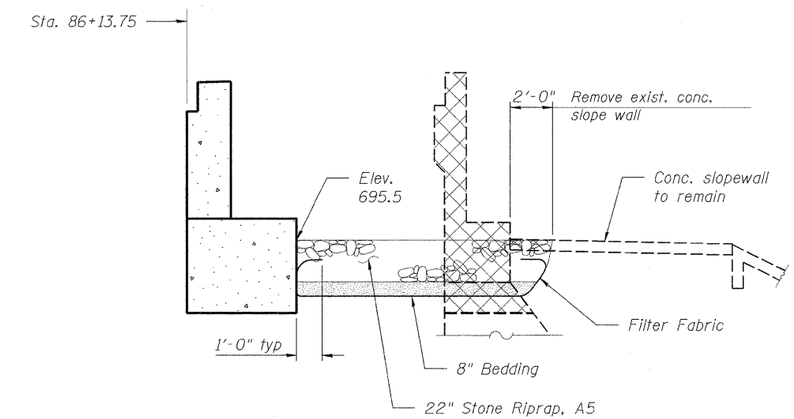

SECTION A-A

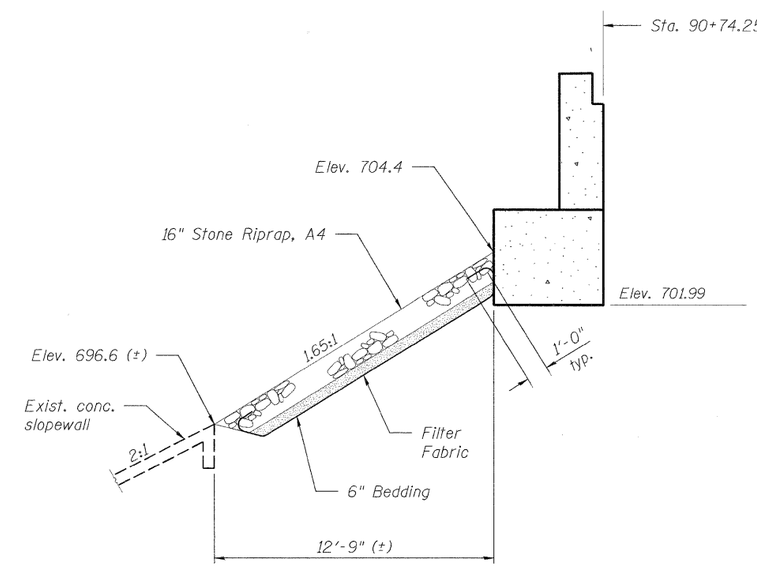

SECTION B-B

SLOPE PROTECTION DETAILS
STRUCTURE NUMBER 101-3100

PROFESSIONAL DESIGN FIRM LICENSE #184-001084

© Copyright Hanson Professional Services Inc. 2010

HANSON
Hanson Professional Services Inc.

JOB NO.	SHEET NO.	F.A.U. RTE.	SECTION	COUNTY	TOTAL SHEETS	SHEET NO.
03R1807	SHEET NO. 3	5103	03-00337-00-BR	Winnebago	66	18
DATE 10/26/10	47 SHEETS			CONTRACT NO. 85523		
			ILLINOIS FED. AID PROJECT			

LAYOUT	JKR/SMK	08/23/10
DRAWN	MGM	10/25/10
REVIEWED	JKR/SMK	10/26/10

ID:0.25-2.0/0
I:\03_Jobs\03R1807\Struct\Sheet\S-003-SLOPE_protect.dgn

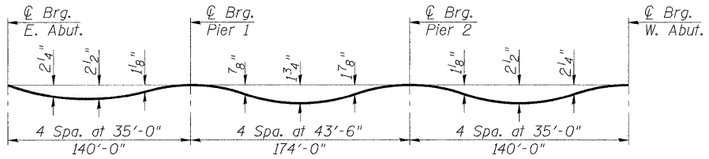

INTERIOR GIRDER DEAD LOAD DEFLECTION DIAGRAM

(Includes weight of concrete only.)

Note: The above deflections are not to be used in the field if the engineer is working from the "Theoretical Grade Elevations Adjusted for Dead Load Deflection."

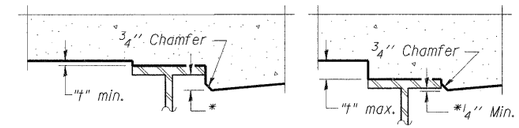

*Variable (not less than ¼")

At Minimum Fillet At Maximum Fillet

To determine "t": After all structural steel has been erected, elevations of the top flanges of the beams shall be taken at intervals shown below. These elevations subtracted from the "Theoretical Grade Elevations Adjusted for Dead Load Deflection" shown below, minus slab thickness, equals the fillet heights "t" above top flange of beams.

FILLET HEIGHTS

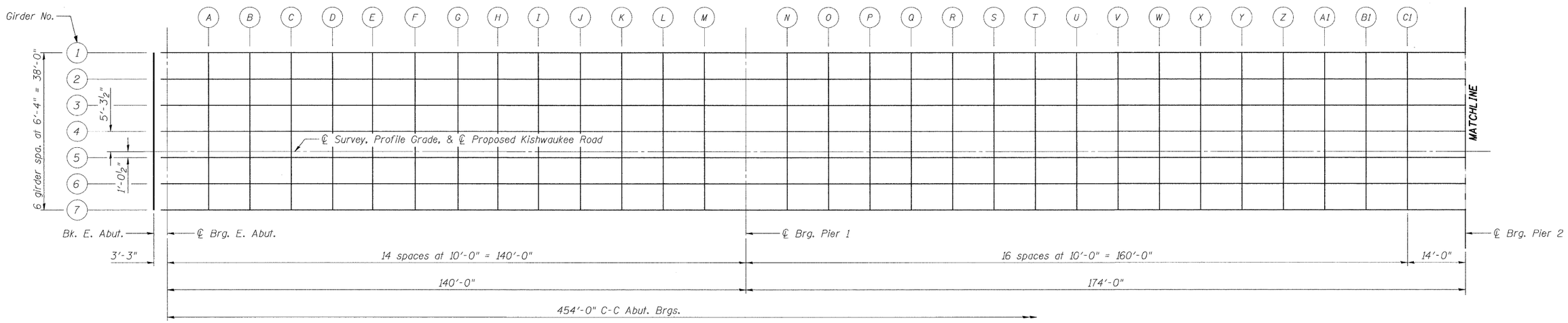

PLAN

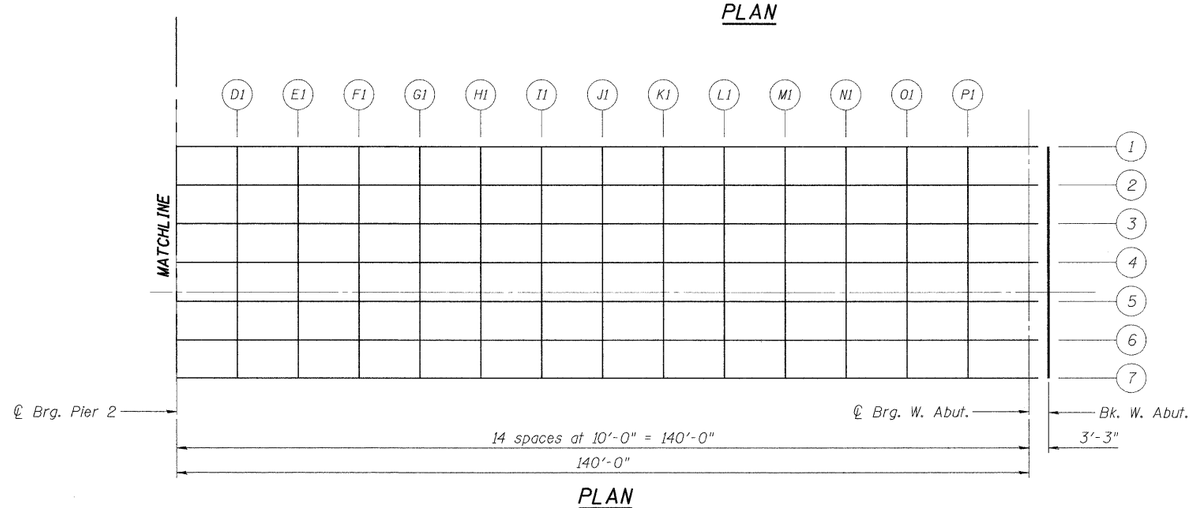

PLAN

TOP OF SLAB ELEVATIONS
STRUCTURE NUMBER 101-3100

PROFESSIONAL DESIGN FIRM LICENSE #184-001084

© Copyright Hanson Professional Services Inc. 2010

HANSON
Hanson Professional Services Inc.

JOB NO.	SHEET NO. 4
03R1807	
DATE 10/26/10	47 SHEETS

F.A.U. RTE.	SECTION	COUNTY	TOTAL SHEETS	SHEET NO.
5103	03-00337-00-BR	Winnebago	66	19
		CONTRACT NO. 85523		
		ILLINOIS FED. AID PROJECT		

LAYOUT	JKR/SMK	08/23/10
DRAWN	MGM	10/25/10
REVIEWED	JKR/SMK	10/26/10

10/26/2010
H:\03Jobs\03R1807\Struct Sheet\S-G04-T05-Elev.dgn

GIRDER 1

Location	Station	Offset	Theoretical Grade Elevations	Theoretical Grade Elevations Adjusted For Dead Load Deflection
Bk. E. Abut	86+13.75	-24.29	702.29	702.29
℄ Brg. E. Abut.	86+17.00	-24.29	702.36	702.36
A	86+27.00	-24.29	702.57	702.62
B	86+37.00	-24.29	702.78	702.88
C	86+47.00	-24.29	702.99	703.14
D	86+57.00	-24.29	703.20	703.38
E	86+67.00	-24.29	703.41	703.60
F	86+77.00	-24.29	703.62	703.82
G	86+87.00	-24.29	703.83	704.03
H	86+97.00	-24.29	704.04	704.21
I	87+07.00	-24.29	704.25	704.39
J	87+17.00	-24.29	704.46	704.56
K	87+27.00	-24.29	704.67	704.75
L	87+37.00	-24.29	704.88	704.93
M	87+47.00	-24.29	705.09	705.11
℄ Brg. Pier 1	87+57.00	-24.29	705.30	705.30
N	87+67.00	-24.29	705.51	705.52
O	87+77.00	-24.29	705.72	705.75
P	87+87.00	-24.29	705.93	705.97
Q	87+97.00	-24.29	706.14	706.20
R	88+07.00	-24.29	706.35	706.43
S	88+17.00	-24.29	706.56	706.66
T	88+27.00	-24.29	706.77	706.88
U	88+37.00	-24.29	706.98	707.11
V	88+47.00	-24.29	707.19	707.33
W	88+57.00	-24.29	707.40	707.52
X	88+67.00	-24.29	707.61	707.71
Y	88+77.00	-24.29	707.82	707.91
Z	88+87.00	-24.29	708.03	708.10
A1	88+97.00	-24.29	708.24	708.29
B1	89+07.00	-24.29	708.45	708.49
C1	89+17.00	-24.29	708.66	708.68
℄ Brg. Pier 2	89+31.00	-24.29	708.95	708.95
D1	89+41.00	-24.29	709.16	709.19
E1	89+51.00	-24.29	709.37	709.42
F1	89+61.00	-24.29	709.58	709.66
G1	89+71.00	-24.29	709.79	709.90
H1	89+81.00	-24.29	710.00	710.14
I1	89+91.00	-24.29	710.21	710.38
J1	90+01.00	-24.29	710.42	710.63
K1	90+11.00	-24.29	710.63	710.83
L1	90+21.00	-24.29	710.84	711.03
M1	90+31.00	-24.29	711.05	711.24
N1	90+41.00	-24.29	711.26	711.42
O1	90+51.00	-24.29	711.47	711.58
P1	90+61.00	-24.29	711.68	711.73
℄ Brg. W. Abut.	90+71.00	-24.29	711.89	711.89
Bk. W. Abut.	90+74.25	-24.29	711.96	711.96

GIRDER 2

Location	Station	Offset	Theoretical Grade Elevations	Theoretical Grade Elevations Adjusted For Dead Load Deflection
Bk. E. Abut	86+13.75	-17.96	702.42	702.42
℄ Brg. E. Abut.	86+17.00	-17.96	702.48	702.48
A	86+27.00	-17.96	702.69	702.75
B	86+37.00	-17.96	702.90	703.01
C	86+47.00	-17.96	703.11	703.27
D	86+57.00	-17.96	703.32	703.51
E	86+67.00	-17.96	703.53	703.73
F	86+77.00	-17.96	703.74	703.94
G	86+87.00	-17.96	703.95	704.16
H	86+97.00	-17.96	704.16	704.34
I	87+07.00	-17.96	704.37	704.51
J	87+17.00	-17.96	704.58	704.69
K	87+27.00	-17.96	704.79	704.87
L	87+37.00	-17.96	705.00	705.06
M	87+47.00	-17.96	705.21	705.24
℄ Brg. Pier 1	87+57.00	-17.96	705.42	705.42
N	87+67.00	-17.96	705.63	705.65
O	87+77.00	-17.96	705.84	705.88
P	87+87.00	-17.96	706.05	706.10
Q	87+97.00	-17.96	706.26	706.33
R	88+07.00	-17.96	706.47	706.55
S	88+17.00	-17.96	706.68	706.78
T	88+27.00	-17.96	706.89	707.01
U	88+37.00	-17.96	707.10	707.24
V	88+47.00	-17.96	707.31	707.46
W	88+57.00	-17.96	707.52	707.65
X	88+67.00	-17.96	707.73	707.84
Y	88+77.00	-17.96	707.94	708.03
Z	88+87.00	-17.96	708.15	708.22
A1	88+97.00	-17.96	708.36	708.42
B1	89+07.00	-17.96	708.57	708.61
C1	89+17.00	-17.96	708.78	708.81
℄ Brg. Pier 2	89+31.00	-17.96	709.08	709.08
D1	89+41.00	-17.96	709.29	709.31
E1	89+51.00	-17.96	709.50	709.55
F1	89+61.00	-17.96	709.71	709.79
G1	89+71.00	-17.96	709.92	710.03
H1	89+81.00	-17.96	710.13	710.27
I1	89+91.00	-17.96	710.34	710.51
J1	90+01.00	-17.96	710.55	710.75
K1	90+11.00	-17.96	710.76	710.96
L1	90+21.00	-17.96	710.97	711.16
M1	90+31.00	-17.96	711.18	711.36
N1	90+41.00	-17.96	711.39	711.55
O1	90+51.00	-17.96	711.60	711.70
P1	90+61.00	-17.96	711.81	711.86
℄ Brg. W. Abut.	90+71.00	-17.96	712.02	712.02
Bk. W. Abut.	90+74.25	-17.96	712.09	712.09

GIRDER 3

Location	Station	Offset	Theoretical Grade Elevations	Theoretical Grade Elevations Adjusted For Dead Load Deflection
Bk. E. Abut	86+13.75	-11.63	702.54	702.54
℄ Brg. E. Abut.	86+17.00	-11.63	702.61	702.61
A	86+27.00	-11.63	702.82	702.87
B	86+37.00	-11.63	703.03	703.14
C	86+47.00	-11.63	703.24	703.40
D	86+57.00	-11.63	703.45	703.64
E	86+67.00	-11.63	703.66	703.85
F	86+77.00	-11.63	703.87	704.07
G	86+87.00	-11.63	704.08	704.29
H	86+97.00	-11.63	704.29	704.46
I	87+07.00	-11.63	704.50	704.64
J	87+17.00	-11.63	704.71	704.82
K	87+27.00	-11.63	704.92	705.00
L	87+37.00	-11.63	705.13	705.18
M	87+47.00	-11.63	705.34	705.37
℄ Brg. Pier 1	87+57.00	-11.63	705.55	705.55
N	87+67.00	-11.63	705.76	705.78
O	87+77.00	-11.63	705.97	706.00
P	87+87.00	-11.63	706.18	706.23
Q	87+97.00	-11.63	706.39	706.45
R	88+07.00	-11.63	706.60	706.68
S	88+17.00	-11.63	706.81	706.91
T	88+27.00	-11.63	707.02	707.14
U	88+37.00	-11.63	707.23	707.37
V	88+47.00	-11.63	707.44	707.58
W	88+57.00	-11.63	707.65	707.78
X	88+67.00	-11.63	707.86	707.97
Y	88+77.00	-11.63	708.07	708.16
Z	88+87.00	-11.63	708.28	708.35
A1	88+97.00	-11.63	708.49	708.54
B1	89+07.00	-11.63	708.70	708.74
C1	89+17.00	-11.63	708.91	708.93
℄ Brg. Pier 2	89+31.00	-11.63	709.20	709.20
D1	89+41.00	-11.63	709.41	709.44
E1	89+51.00	-11.63	709.62	709.68
F1	89+61.00	-11.63	709.83	709.91
G1	89+71.00	-11.63	710.04	710.15
H1	89+81.00	-11.63	710.25	710.40
I1	89+91.00	-11.63	710.46	710.64
J1	90+01.00	-11.63	710.67	710.88
K1	90+11.00	-11.63	710.88	711.08
L1	90+21.00	-11.63	711.09	711.29
M1	90+31.00	-11.63	711.30	711.49
N1	90+41.00	-11.63	711.51	711.67
O1	90+51.00	-11.63	711.72	711.83
P1	90+61.00	-11.63	711.93	711.99
℄ Brg. W. Abut.	90+71.00	-11.63	712.14	712.14
Bk. W. Abut.	90+74.25	-11.63	712.21	712.21

GIRDER 4

Location	Station	Offset	Theoretical Grade Elevations	Theoretical Grade Elevations Adjusted For Dead Load Deflection
Bk. E. Abut	86+13.75	-5.29	702.67	702.67
℄ Brg. E. Abut.	86+17.00	-5.29	702.74	702.74
A	86+27.00	-5.29	702.95	703.00
B	86+37.00	-5.29	703.16	703.26
C	86+47.00	-5.29	703.37	703.52
D	86+57.00	-5.29	703.58	703.76
E	86+67.00	-5.29	703.79	703.98
F	86+77.00	-5.29	704.00	704.20
G	86+87.00	-5.29	704.21	704.41
H	86+97.00	-5.29	704.42	704.59
I	87+07.00	-5.29	704.63	704.77
J	87+17.00	-5.29	704.84	704.94
K	87+27.00	-5.29	705.05	705.13
L	87+37.00	-5.29	705.26	705.31
M	87+47.00	-5.29	705.47	705.49
℄ Brg. Pier 1	87+57.00	-5.29	705.68	705.68
N	87+67.00	-5.29	705.89	705.90
O	87+77.00	-5.29	706.10	706.13
P	87+87.00	-5.29	706.31	706.35
Q	87+97.00	-5.29	706.52	706.58
R	88+07.00	-5.29	706.73	706.81
S	88+17.00	-5.29	706.94	707.04
T	88+27.00	-5.29	707.15	707.26
U	88+37.00	-5.29	707.36	707.49
V	88+47.00	-5.29	707.57	707.71
W	88+57.00	-5.29	707.78	707.90
X	88+67.00	-5.29	707.99	708.09
Y	88+77.00	-5.29	708.20	708.29
Z	88+87.00	-5.29	708.41	708.48
A1	88+97.00	-5.29	708.62	708.67
B1	89+07.00	-5.29	708.83	708.87
C1	89+17.00	-5.29	709.04	709.06
℄ Brg. Pier 2	89+31.00	-5.29	709.33	709.33
D1	89+41.00	-5.29	709.54	709.57
E1	89+51.00	-5.29	709.75	709.80
F1	89+61.00	-5.29	709.96	710.04
G1	89+71.00	-5.29	710.17	710.28
H1	89+81.00	-5.29	710.38	710.52
I1	89+91.00	-5.29	710.59	710.76
J1	90+01.00	-5.29	710.80	711.01
K1	90+11.00	-5.29	711.01	711.21
L1	90+21.00	-5.29	711.22	711.41
M1	90+31.00	-5.29	711.43	711.62
N1	90+41.00	-5.29	711.64	711.80
O1	90+51.00	-5.29	711.85	711.96
P1	90+61.00	-5.29	712.06	712.11
℄ Brg. W. Abut.	90+71.00	-5.29	712.27	712.27
Bk. W. Abut.	90+74.25	-5.29	712.34	712.34

TOP OF SLAB ELEVATIONS
STRUCTURE NUMBER 101-3100

PROFESSIONAL DESIGN FIRM LICENSE #184-001084

© Copyright Hanson Professional Services Inc. 2010

HANSON
Hanson Professional Services Inc.

JOB NO. 03R1807
DATE 10/26/10
SHEET NO. 5
47 SHEETS

F.A.U. RTE.	SECTION	COUNTY	TOTAL SHEETS	SHEET NO.
5103	03-00337-00-BR	Winnebago	66	20

CONTRACT NO. 85523

ILLINOIS FED. AID PROJECT

LAYOUT	JKR/SMK	08/23/10	
DRAWN	MGM	10/25/10	
REVIEWED	JKR/SMK	10/26/10	

10-28-2010
H:\03Jobs\03R1807\Struct\Sheet\S-005-T-05-E1bh-1.dgn

℄ SURVEY, PROFILE GRADE & ℄ PROPOSED KISHWAUKEE ROAD

GIRDER 5

Location	Station	Offset	Theoretical Grade Elevations	Theoretical Grade Elevations Adjusted For Dead Load Deflection
Bk. E. Abut	86+13.75	0.00	702.77	702.77
℄ Brg. E. Abut.	86+17.00	0.00	702.84	702.84
A	86+27.00	0.00	703.05	703.11
B	86+37.00	0.00	703.26	703.37
C	86+47.00	0.00	703.47	703.63
D	86+57.00	0.00	703.68	703.87
E	86+67.00	0.00	703.89	704.09
F	86+77.00	0.00	704.10	704.30
G	86+87.00	0.00	704.31	704.52
H	86+97.00	0.00	704.52	704.70
I	87+07.00	0.00	704.73	704.87
J	87+17.00	0.00	704.94	705.05
K	87+27.00	0.00	705.15	705.23
L	87+37.00	0.00	705.36	705.41
M	87+47.00	0.00	705.57	705.60
℄ Brg. Pier 1	87+57.00	0.00	705.78	705.78
N	87+67.00	0.00	705.99	706.01
O	87+77.00	0.00	706.20	706.23
P	87+87.00	0.00	706.41	706.46
Q	87+97.00	0.00	706.62	706.69
R	88+07.00	0.00	706.83	706.91
S	88+17.00	0.00	707.04	707.14
T	88+27.00	0.00	707.25	707.37
U	88+37.00	0.00	707.46	707.60
V	88+47.00	0.00	707.67	707.82
W	88+57.00	0.00	707.88	708.01
X	88+67.00	0.00	708.09	708.20
Y	88+77.00	0.00	708.30	708.39
Z	88+87.00	0.00	708.51	708.58
A1	88+97.00	0.00	708.72	708.78
B1	89+07.00	0.00	708.93	708.97
C1	89+17.00	0.00	709.14	709.16
℄ Brg. Pier 2	89+31.00	0.00	709.44	709.44
D1	89+41.00	0.00	709.65	709.67
E1	89+51.00	0.00	709.86	709.91
F1	89+61.00	0.00	710.07	710.14
G1	89+71.00	0.00	710.28	710.38
H1	89+81.00	0.00	710.49	710.63
I1	89+91.00	0.00	710.70	710.87
J1	90+01.00	0.00	710.91	711.11
K1	90+11.00	0.00	711.12	711.32
L1	90+21.00	0.00	711.33	711.52
M1	90+31.00	0.00	711.54	711.72
N1	90+41.00	0.00	711.75	711.90
O1	90+51.00	0.00	711.96	712.06
P1	90+61.00	0.00	712.17	712.22
℄ Brg. W. Abut.	90+71.00	0.00	712.38	712.38
Bk. W. Abut.	90+74.25	0.00	712.44	712.44

GIRDER 6

Location	Station	Offset	Theoretical Grade Elevations	Theoretical Grade Elevations Adjusted For Dead Load Deflection
Bk. E. Abut	86+13.75	1.04	702.75	702.75
℄ Brg. E. Abut.	86+17.00	1.04	702.82	702.82
A	86+27.00	1.04	703.03	703.08
B	86+37.00	1.04	703.24	703.35
C	86+47.00	1.04	703.45	703.61
D	86+57.00	1.04	703.66	703.85
E	86+67.00	1.04	703.87	704.07
F	86+77.00	1.04	704.08	704.28
G	86+87.00	1.04	704.29	704.50
H	86+97.00	1.04	704.50	704.68
I	87+07.00	1.04	704.71	704.85
J	87+17.00	1.04	704.92	705.03
K	87+27.00	1.04	705.13	705.21
L	87+37.00	1.04	705.34	705.39
M	87+47.00	1.04	705.55	705.58
℄ Brg. Pier 1	87+57.00	1.04	705.76	705.76
N	87+67.00	1.04	705.97	705.99
O	87+77.00	1.04	706.18	706.21
P	87+87.00	1.04	706.39	706.44
Q	87+97.00	1.04	706.60	706.67
R	88+07.00	1.04	706.81	706.89
S	88+17.00	1.04	707.02	707.12
T	88+27.00	1.04	707.23	707.35
U	88+37.00	1.04	707.44	707.58
V	88+47.00	1.04	707.65	707.80
W	88+57.00	1.04	707.86	707.99
X	88+67.00	1.04	708.07	708.18
Y	88+77.00	1.04	708.28	708.37
Z	88+87.00	1.04	708.49	708.56
A1	88+97.00	1.04	708.70	708.76
B1	89+07.00	1.04	708.91	708.95
C1	89+17.00	1.04	709.12	709.14
℄ Brg. Pier 2	89+31.00	1.04	709.42	709.42
D1	89+41.00	1.04	709.63	709.65
E1	89+51.00	1.04	709.84	709.89
F1	89+61.00	1.04	710.05	710.12
G1	89+71.00	1.04	710.26	710.36
H1	89+81.00	1.04	710.47	710.61
I1	89+91.00	1.04	710.68	710.85
J1	90+01.00	1.04	710.89	711.09
K1	90+11.00	1.04	711.10	711.30
L1	90+21.00	1.04	711.31	711.50
M1	90+31.00	1.04	711.52	711.70
N1	90+41.00	1.04	711.73	711.88
O1	90+51.00	1.04	711.94	712.04
P1	90+61.00	1.04	712.15	712.20
℄ Brg. W. Abut.	90+71.00	1.04	712.36	712.36
Bk. W. Abut.	90+74.250	1.04	712.42	712.42

GIRDER 7

Location	Station	Offset	Theoretical Grade Elevations	Theoretical Grade Elevations Adjusted For Dead Load Deflection
Bk. E. Abut	86+13.75	7.38	702.63	702.63
℄ Brg. E. Abut.	86+17.00	7.38	702.70	702.70
A	86+27.00	7.38	702.90	702.96
B	86+37.00	7.38	703.12	703.22
C	86+47.00	7.38	703.33	703.48
D	86+57.00	7.38	703.53	703.72
E	86+67.00	7.38	703.75	703.94
F	86+77.00	7.38	703.96	704.16
G	86+87.00	7.38	704.16	704.37
H	86+97.00	7.38	704.38	704.55
I	87+07.00	7.38	704.58	704.73
J	87+17.00	7.38	704.79	704.90
K	87+27.00	7.38	705.01	705.08
L	87+37.00	7.38	705.21	705.27
M	87+47.00	7.38	705.42	705.45
℄ Brg. Pier 1	87+57.00	7.38	705.64	705.64
N	87+67.00	7.38	705.84	705.86
O	87+77.00	7.38	706.06	706.09
P	87+87.00	7.38	706.27	706.31
Q	87+97.00	7.38	706.47	706.54
R	88+07.00	7.38	706.69	706.77
S	88+17.00	7.38	706.89	706.99
T	88+27.00	7.38	707.10	707.22
U	88+37.00	7.38	707.32	707.45
V	88+47.00	7.38	707.52	707.67
W	88+57.00	7.38	707.73	707.86
X	88+67.00	7.38	707.95	708.05
Y	88+77.00	7.38	708.15	708.24
Z	88+87.00	7.38	708.37	708.44
A1	88+97.00	7.38	708.58	708.63
B1	89+07.00	7.38	708.78	708.82
C1	89+17.00	7.38	709.00	709.02
℄ Brg. Pier 2	89+31.00	7.38	709.29	709.29
D1	89+41.00	7.38	709.50	709.53
E1	89+51.00	7.38	709.71	709.76
F1	89+61.00	7.38	709.92	710.00
G1	89+71.00	7.38	710.13	710.24
H1	89+81.00	7.38	710.34	710.48
I1	89+91.00	7.38	710.55	710.72
J1	90+01.00	7.38	710.76	710.97
K1	90+11.00	7.38	710.97	711.17
L1	90+21.00	7.38	711.18	711.37
M1	90+31.00	7.38	711.39	711.58
N1	90+41.00	7.38	711.60	711.76
O1	90+51.00	7.38	711.81	711.91
P1	90+61.00	7.38	712.02	712.07
℄ Brg. W. Abut.	90+71.00	7.38	712.23	712.23
Bk. W. Abut.	90+74.25	7.38	712.30	712.30

GIRDER 7

Location	Station	Offset	Theoretical Grade Elevations	Theoretical Grade Elevations Adjusted For Dead Load Deflection
Bk. E. Abut	86+13.75	13.71	702.50	702.50
℄ Brg. E. Abut.	86+17.00	13.71	702.57	702.57
A	86+27.00	13.71	702.78	702.83
B	86+37.00	13.71	702.99	703.09
C	86+47.00	13.71	703.20	703.36
D	86+57.00	13.71	703.41	703.60
E	86+67.00	13.71	703.62	703.81
F	86+77.00	13.71	703.83	704.03
G	86+87.00	13.71	704.04	704.25
H	86+97.00	13.71	704.25	704.42
I	87+07.00	13.71	704.46	704.60
J	87+17.00	13.71	704.67	704.78
K	87+27.00	13.71	704.88	704.96
L	87+37.00	13.71	705.09	705.14
M	87+47.00	13.71	705.30	705.32
℄ Brg. Pier 1	87+57.00	13.71	705.51	705.51
N	87+67.00	13.71	705.72	705.73
O	87+77.00	13.71	705.93	705.96
P	87+87.00	13.71	706.14	706.19
Q	87+97.00	13.71	706.35	706.41
R	88+07.00	13.71	706.56	706.64
S	88+17.00	13.71	706.77	706.87
T	88+27.00	13.71	706.98	707.10
U	88+37.00	13.71	707.19	707.32
V	88+47.00	13.71	707.40	707.54
W	88+57.00	13.71	707.61	707.73
X	88+67.00	13.71	707.82	707.93
Y	88+77.00	13.71	708.03	708.12
Z	88+87.00	13.71	708.24	708.31
A1	88+97.00	13.71	708.45	708.50
B1	89+07.00	13.71	708.66	708.70
C1	89+17.00	13.71	708.87	708.89
℄ Brg. Pier 2	89+31.00	13.71	709.16	709.16
D1	89+41.00	13.71	709.37	709.40
E1	89+51.00	13.71	709.58	709.63
F1	89+61.00	13.71	709.79	709.87
G1	89+71.00	13.71	710.00	710.11
H1	89+81.00	13.71	710.21	710.35
I1	89+91.00	13.71	710.42	710.60
J1	90+01.00	13.71	710.63	710.84
K1	90+11.00	13.71	710.84	711.04
L1	90+21.00	13.71	711.05	711.25
M1	90+31.00	13.71	711.26	711.45
N1	90+41.00	13.71	711.47	711.63
O1	90+51.00	13.71	711.68	711.79
P1	90+61.00	13.71	711.89	711.94
℄ Brg. W. Abut.	90+71.00	13.71	712.10	712.10
Bk. W. Abut.	90+74.25	13.71	712.17	712.17

TOP OF SLAB ELEVATIONS
STRUCTURE NUMBER 101-3100

PROFESSIONAL DESIGN FIRM LICENSE #184-001084

© Copyright Hansson Professional Services Inc. 2010

HANSON
Hanson Professional Services Inc.

JOB NO.	SHEET NO. 6
03R1807	47 SHEETS
DATE 10/26/10	

F.A.U. RTE.	SECTION	COUNTY	TOTAL SHEETS	SHEET NO.
5103	03-00337-00-BR	Winnebago	66	21
		CONTRACT NO. 85523		
	ILLINOIS FED. AID PROJECT			

LAYOUT	JKR/SMK	08/23/10
DRAWN	MGM	10/25/10
REVIEWED	JKR/SMK	10/26/10

ID:08-200
N:\03J166\CORRIDOR\Struct\Sheet\S-006-T05-E1bb-2.dgn

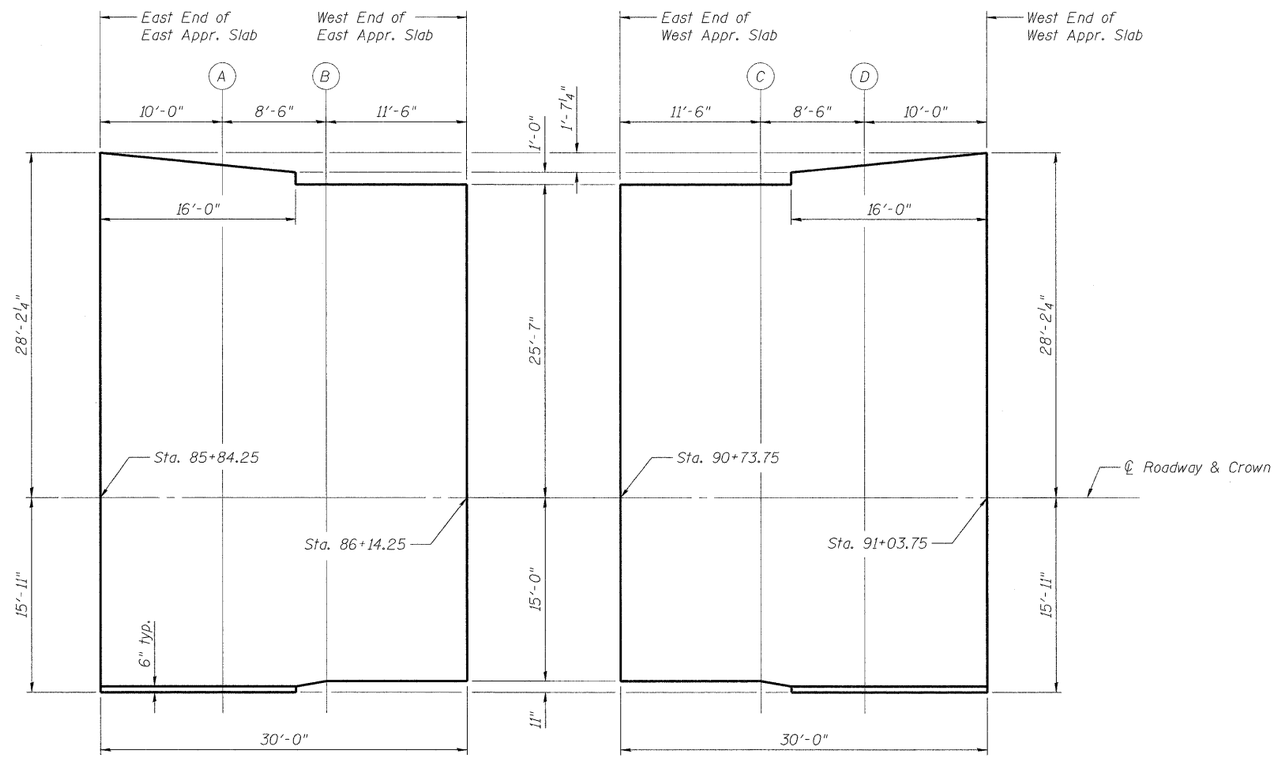

EAST APPROACH

WEST APPROACH

PLAN

SOUTH EDGE OF SLAB

Location	Station	Offset	Theoretical Grade Elevations
E. End East Appr.	85+84.25	-28.19	701.59
A	85+94.25	-27.19	701.82
B	86+02.75	-25.58	702.03
W. End East Appr.	86+14.25	-25.58	702.27
E. End West Appr.	90+73.75	-25.58	711.92
C	90+85.25	-25.58	712.18
D	90+93.75	-27.19	712.33
W. End West Appr.	91+03.75	-28.19	712.54

CENTERLINE ROAD, P.G.L. & CROWN

Location	Station	Offset	Theoretical Grade Elevations
E. End East Appr.	85+84.25	0	702.15
A	85+94.25	0	702.36
B	86+02..75	0	702.54
W. End East Appr.	86+14.25	0	702.78
E. End West Appr.	90+73.75	0	712.43
C	90+85.25	0	712.69
D	90+93.75	0	712.87
W. End West Appr.	91+03.75	0	713.10

NORTH EDGE OF SLAB OR FACE OF CURB

Location	Station	Offset	Theoretical Grade Elevations
E. End East Appr.	85+84.25	15.42	701.84
A	85+94.25	15.42	702.05
B	86+02..75	15.00	702.24
W. End East Appr.	86+14.25	15.00	702.48
E. End West Appr.	90+73.75	15.00	712.13
C	90+85.25	15.00	712.39
D	90+93.75	15.42	712.56
W. End West Appr.	91+03.75	15.42	712.79

Notes:
Negative (-) offsets are offsets to the left of the ℄ while looking upstation.

TOP OF APPROACH SLAB ELEVATIONS
STRUCTURE NUMBER 101-3100

PROFESSIONAL DESIGN FIRM LICENSE #184-001084

© Copyright Hanson Professional Services Inc. 2010

HANSON
Hanson Professional Services Inc.

JOB NO.	SHEET NO. 7	F.A.U. RTE.	SECTION	COUNTY	TOTAL SHEETS	SHEET NO.
03R1807		5103	03-00337-00-BR	Winnebago	66	22
DATE 10/26/10	47 SHEETS			CONTRACT NO. 85523		
			ILLINOIS	FED. AID PROJECT		

LAYOUT	JKR/SMK	08/23/10
DRAWN	MGM	10/25/10
REVIEWED	JKR/SMK	10/26/10

10/29/2010
I:\03jobs\03R1807\StructSheets\S-007-TOS_Appdgn

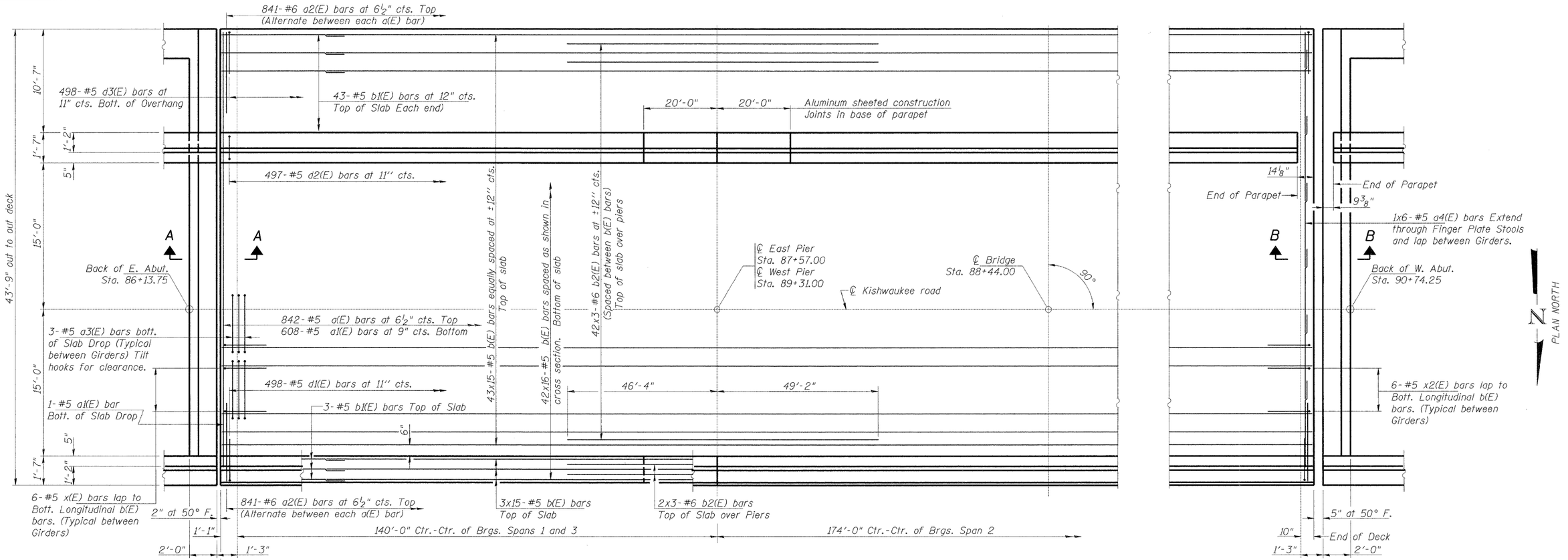

SCHEMATIC PARTIAL PLAN

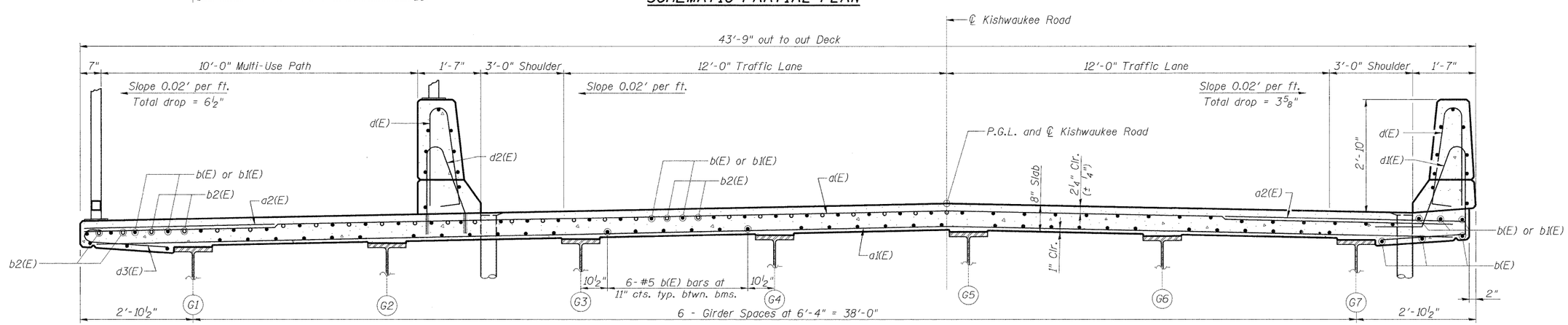

NEAR PIER

CROSS SECTION

(Looking Upstation)

NEAR MIDSPAN

Notes:

See Sheet 11 of 47 for Sections 'A'-'A' & 'B'-'B', Bar Bends and Bill of Material.

Bars indicated thus 40 x 3- #6 etc. indicates 40 lines of bars with 3 lengths per line.

See Sheets 9 & 10 of 47 for parapet reinforcement.

Dimensions are based on a Rolled Rail Strip Seal Joint. If the Contractor elects to use the Welded Rail Strip Seal Joint, deck dimensions may require adjustments to satisfy the details on Base Sheet EJ-SSJ, Sheet 14 of 47.

MIN BAR LAP

#5 - 2'-7"
#6 - 3'-1"

SUPERSTRUCTURE
STRUCTURE NUMBER 101-3100

PROFESSIONAL DESIGN FIRM LICENSE #184-001084

© Copyright Hanson Professional Services Inc. 2010

HANSON
Hanson Professional Services Inc.

JOB NO.	SHEET NO.	F.A.U. RTE.	SECTION	COUNTY	TOTAL SHEETS	SHEET NO.
03R1807	SHEET NO. 8	5103	03-00337-00-BR	Winnebago	66	23
DATE 10/26/10	47 SHEETS			CONTRACT NO. 85523		
				ILLINOIS FED. AID PROJECT		

LAYOUT	JKR/SMK	08/23/10
DRAWN	WDM	10/25/10
REVIEWED	JKR/SMK	10/26/10

ID:DB-2010
I:\03\1084\CDR\B07\Struct\Sheet-S-008-Super Plan and Cross Section.dgn

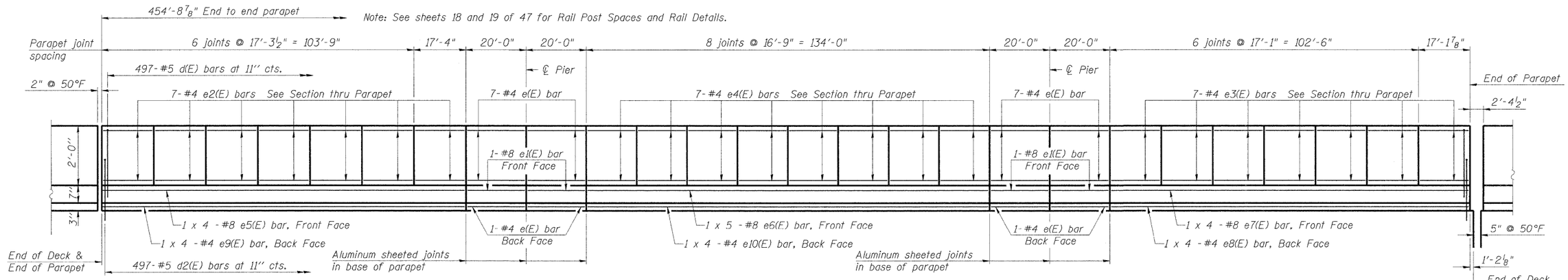

INSIDE ELEVATION OF SOUTH PARAPET

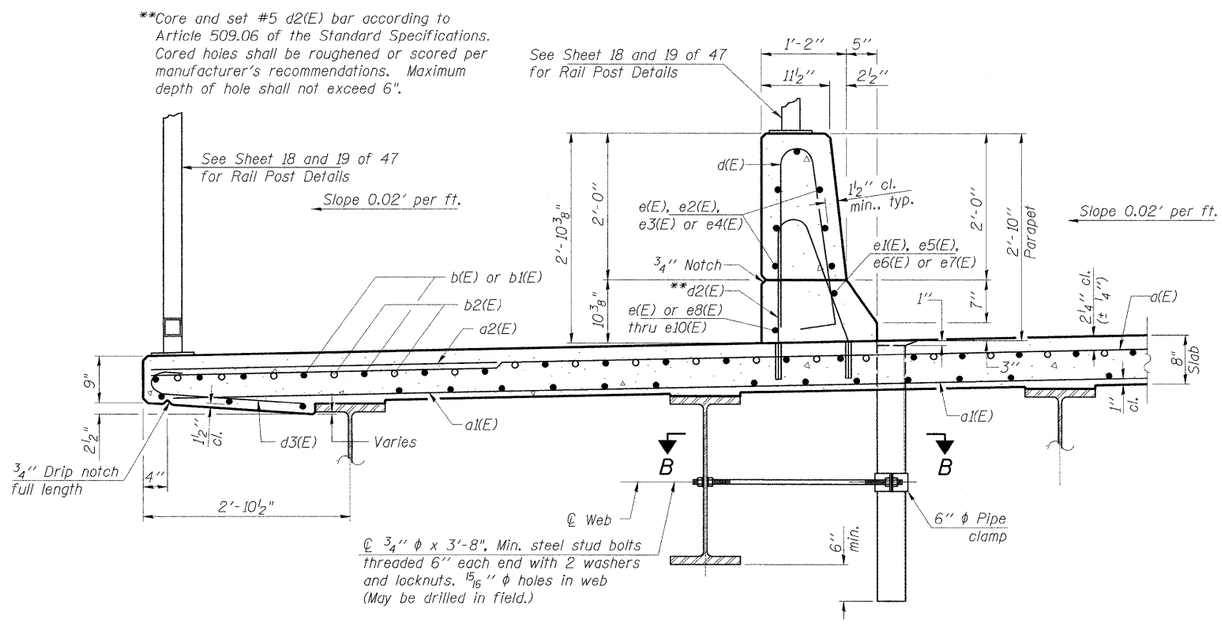

SECTION THRU SOUTH PARAPET

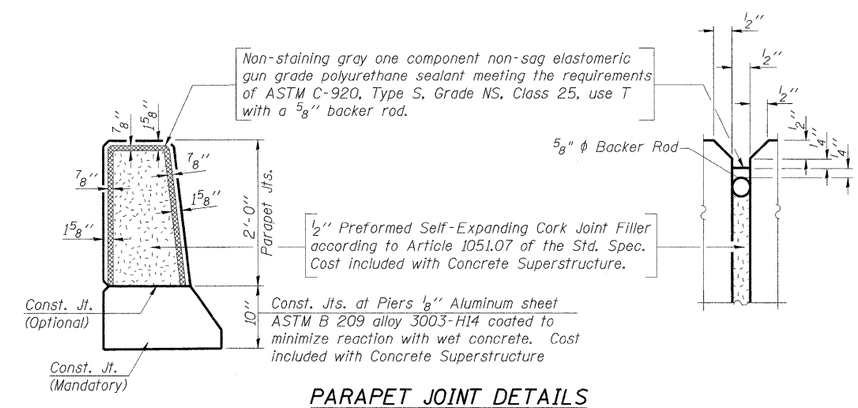

PARAPET JOINT DETAILS

Notes:

Drains shall be located clear of all diaphragms.

The exterior surfaces of the floor drains shall be painted with the finish coat as specified in the special provisions for Cleaning and Painting New Metal Structures. The exterior surfaces of the drains shall be cleaned according to the Society of Protective Coating's Spec. SSPC-SP1 prior to painting.

Fiberglass pipe shall conform to ASTM D 2996, with short-time rupture strength hoop tensile stress of 30,000 p.s.i. minimum.

Galvanize clamping device according to AASHTO M232. Cost of clamping device and inserts is included with Floor Drains.

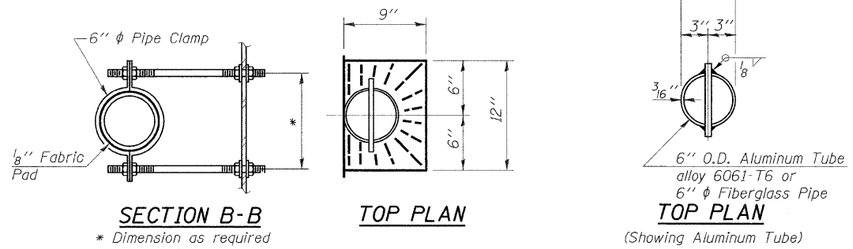

SECTION B-B

* Dimension as required by Pipe Clamp

TOP PLAN

TOP PLAN

(Showing Aluminum Tube)

6" O.D. Aluminum Tube alloy 6061-T6 or 6" ϕ Fiberglass Pipe

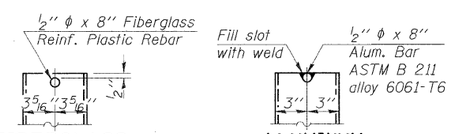

FIBERGLASS PIPE

ALUMINUM TUBE

MINIMUM BAR LAP

(Parapet)

#4 bar = 2'-4"

#8 bar = 5'-5"

SUPERSTRUCTURE DETAILS
STRUCTURE NUMBER 101-3100

PROFESSIONAL DESIGN FIRM LICENSE #184-001084

© Copyright Hanson Professional Services Inc. 2010

HANSON
Hanson Professional Services Inc.

JOB NO.	SHEET NO. 9	F.A.U. RTE.	SECTION	COUNTY	TOTAL SHEETS	SHEET NO.
03R1807		5103	03-00337-00-BR	Winnebago	66	24
DATE 10/26/10	47 SHEETS			CONTRACT NO. 85523		
				ILLINOIS FED. AID PROJECT		

LAYOUT	JKR/SMK	08/23/10
DRAWN	MGM	10/25/10
REVIEWED	JKR/SMK	10/26/10

ID:09.0200
INDS:Jobs\03R1807\Struct\Sheet\S-009-South Parapet.dgn

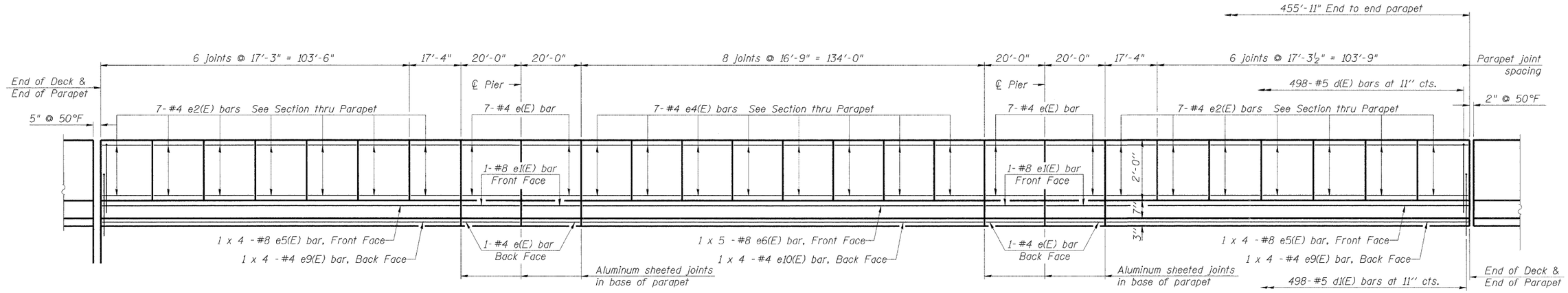

INSIDE ELEVATION OF NORTH PARAPET

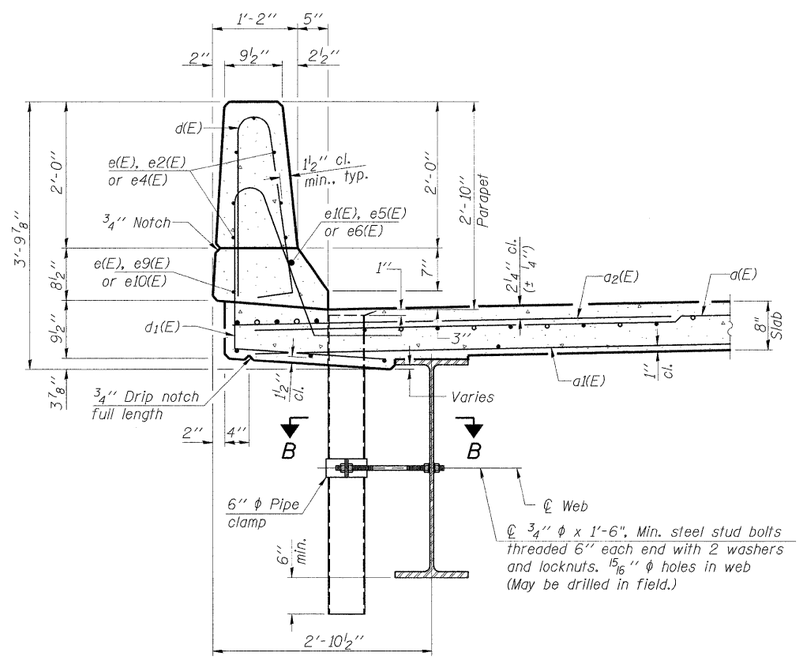

SECTION THRU NORTH PARAPET

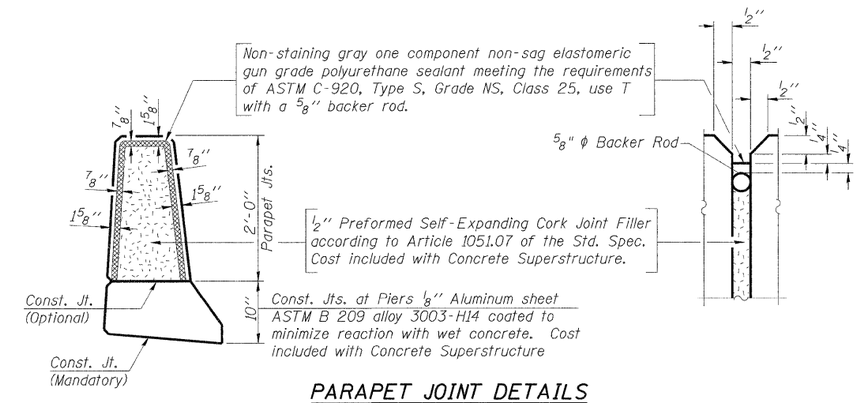

PARAPET JOINT DETAILS

Notes:

Drains shall be located clear of all diaphragms.

The exterior surfaces of the floor drains shall be painted with the finish coat as specified in the special provisions for Cleaning and Painting New Metal Structures. The exterior surfaces of the drains shall be cleaned according to the Society of Protective Coating's Spec. SSPC-SP1 prior to painting.

Fiberglass pipe shall conform to ASTM D 2996, with short-time rupture strength hoop tensile stress of 30,000 p.s.i. minimum.

Galvanize clamping device according to AASHTO M232. Cost of clamping device and inserts is included with Floor Drains.

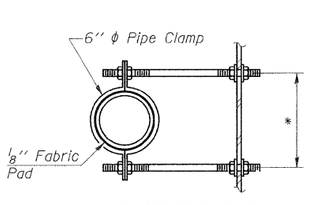

SECTION B-B

* Dimension as required by Pipe Clamp

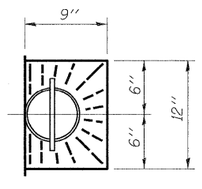

TOP PLAN

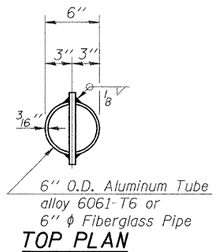

TOP PLAN

(Showing Aluminum Tube)

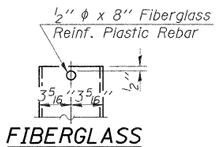

FIBERGLASS PIPE

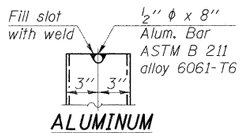

ALUMINUM TUBE

MINIMUM BAR LAP

(Parapet)

#4 bar = 2'-4"

#8 bar = 5'-5"

SUPERSTRUCTURE DETAILS
STRUCTURE NUMBER 101-3100

PROFESSIONAL DESIGN FIRM LICENSE #184-001084

© Copyright Hanson Professional Services Inc. 2010

HANSON
Hanson Professional Services Inc.

JOB NO.		F.A.U. RTE.	SECTION	COUNTY	TOTAL SHEETS	SHEET NO.
03R1807	SHEET NO. 10	5103	03-00337-00-BR	Winnebago	66	25
DATE 10/26/10	47 SHEETS			CONTRACT NO. 85523		
				ILLINOIS FED. AID PROJECT		

LAYOUT	JKR/SMK	08/23/10
DRAWN	MGM	10/25/10
REVIEWED	JKR/SMK	10/26/10

ID:09-0200
I:\03R1807\03R1807\Structure\Sheet-S-010-North Parapet.dgn

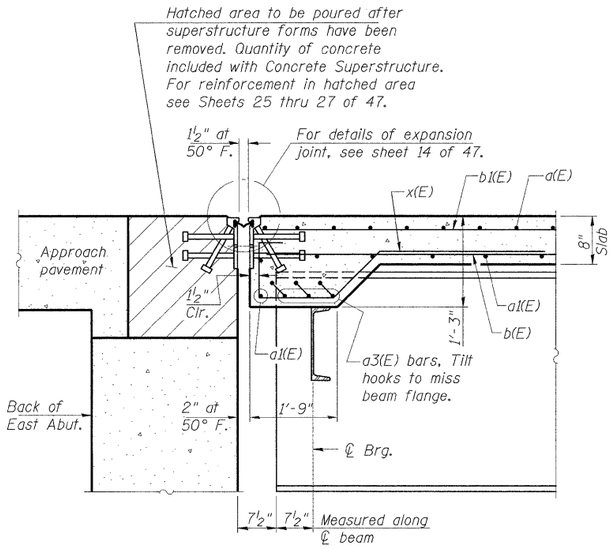

SECTION A-A

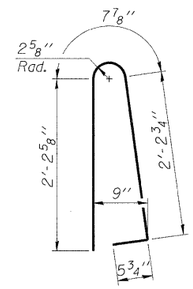

BAR d(E)

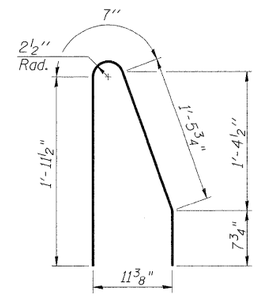

BAR d2(E) South Parapet

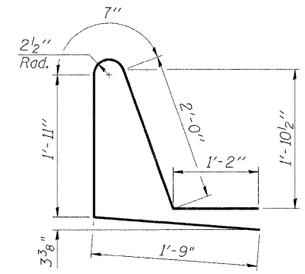

BAR d1(E)

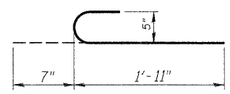

BAR d3(E)

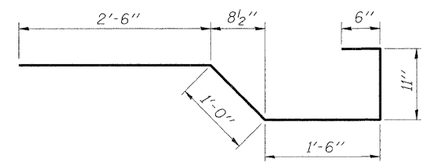

BAR x(E)

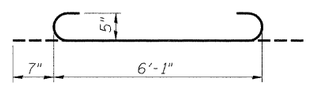

a3(E) BAR

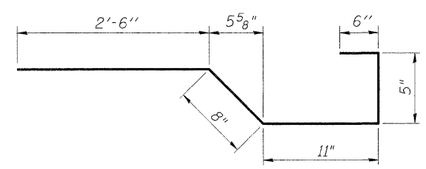

BAR x2(E)

SUPERSTRUCTURE BILL OF MATERIAL

Bar	No.	Size	Length	Shape
a(E)	842	#5	43'-3"	
a1(E)	609	#5	43'-0"	
a2(E)	1682	#6	6'-6"	
a3(E)	18	#5	7'-3"	
a4(E)	6	#5	8'-11"	
a5(E)				Not Used
b(E)	1362	#5	30'-11"	
b1(E)	92	#5	16'-7"	
b2(E)	264	#6	33'-11"	
d(E)	995	#5	5'-7"	
d1(E)	498	#5	7'-5"	
d2(E)	497	#5	4'-8"	
d3(E)	498	#5	2'-6"	
e(E)	64	#4	19'-8"	
e_1(E)	8	#8	19'-8"	
e_2(E)	147	#4	17'-1"	
e_3(E)	49	#4	16'-10"	
e_4(E)	112	#4	16'-6"	
e_5(E)	12	#8	34'-3"	
e_6(E)	10	#8	31'-0"	
e_7(E)	4	#8	33'-11"	
e_8(E)	4	#4	31'-4"	
e_9(E)	12	#4	32'-0"	
e_{10}(E)	8	#4	35'-2"	
x(E)	36	#5	6'-5"	
x1(E)				Not Used
x2(E)	36	#5	5'-0"	
Reinforcement Bars, Epoxy Coated			Pound	162,200
Concrete Superstructure			Cu. Yds.	639.8
Bridge Deck Grooving			Sq. Yds.	1414
Protective Coat			Sq. Yds.	2584
Floor Drains			Each	14

Reinforcement bars designated (E) shall be epoxy coated.

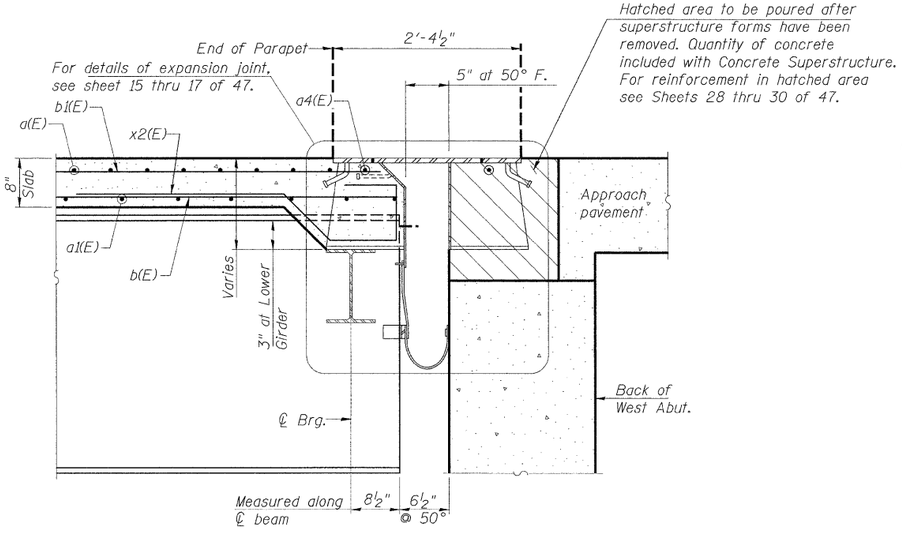

SECTION B-B

Reposition Thrustblock h bars in back of Joint Support Stool Anchor Bolts if required to maintain 1" cl. (±⅛"). Tie Thrustblock h bars to Anchor bolts.

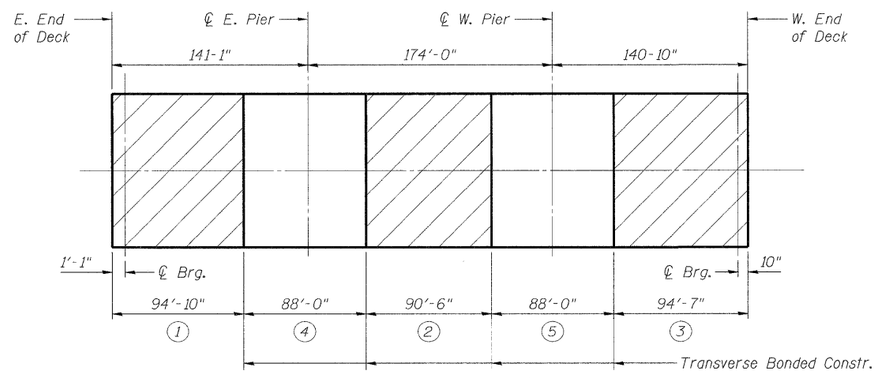

DECK POURING SEQUENCE

The concrete deck shall be poured in the numerical order shown.

When the deck pour is stopped for the day at one or more of the Transverse Bonded Constr. Joints shown, the next pour shall not be made until both of the following requirements are met:

1. At least 72 hrs. shall have elapsed from the end of the previous pour.
2. The concrete strength shall have attained a minimum modulus of rupture of 650 psi or a minimum compressive strength of 3500 psi.

SUPERSTRUCTURE DETAILS
STRUCTURE NUMBER 101-3100

PROFESSIONAL DESIGN FIRM LICENSE #184-001084

© Copyright Hanson Professional Services Inc. 2010

HANSON
Hanson Professional Services Inc.

JOB NO. 03R1807
DATE 10/26/10
SHEET NO. 11
47 SHEETS

F.A.U. RTE.	SECTION	COUNTY	TOTAL SHEETS	SHEET NO.
5103	03-00337-00-BR	Winnebago	66	26

CONTRACT NO. 85523

ILLINOIS FED. AID PROJECT

LAYOUT	JKR/SMK 08/23/10
DRAWN	MGM 10/25/10
REVIEWED	JKR/SMK 10/26/10

ID:09-2010
I:\03Jobs\03R807\Struct\Sheet's-01thSuper-det\BOM.dgn

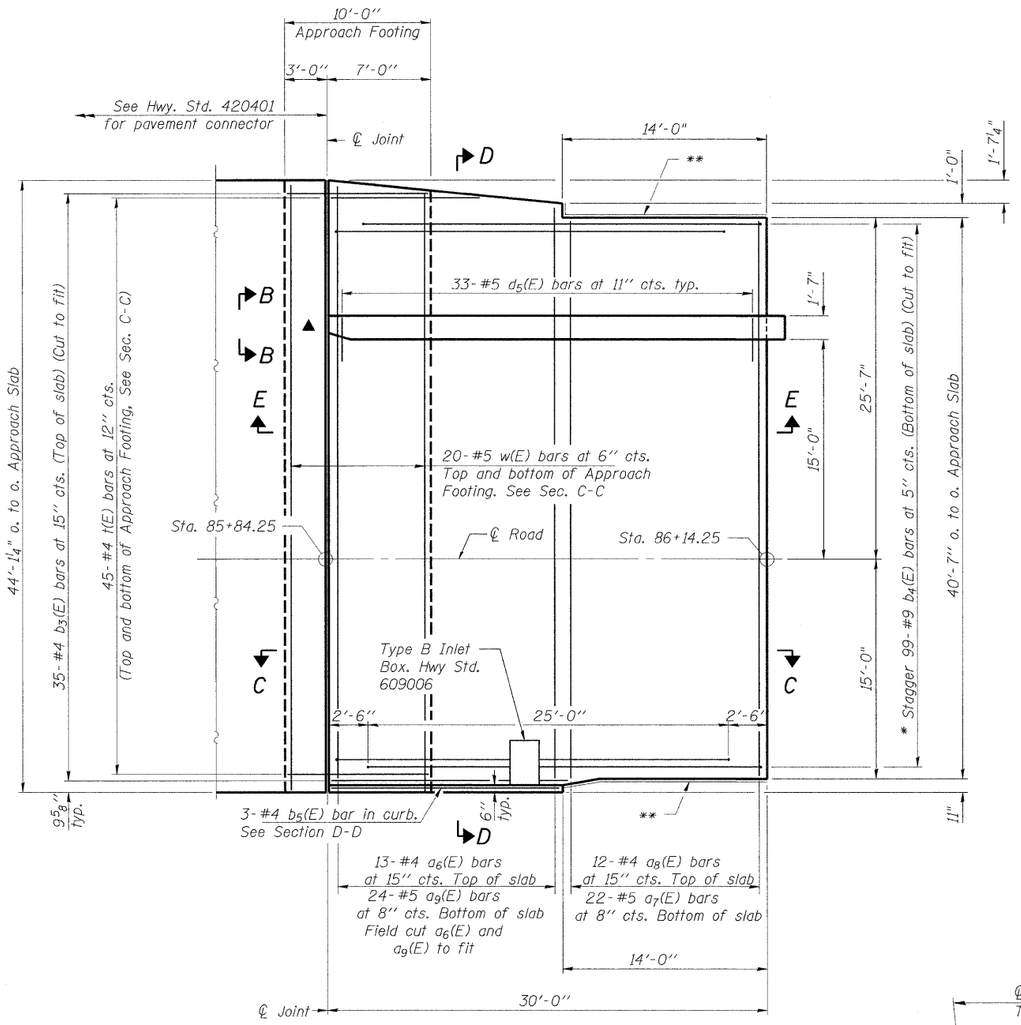

EAST APPROACH PLAN

* Tilt #9 b_4(E) bars as required to maintain clearance.
** Closed cell joint filler.
▲ Notch sleeper pad as required to facilitate the installation of the terminal barrier posts.

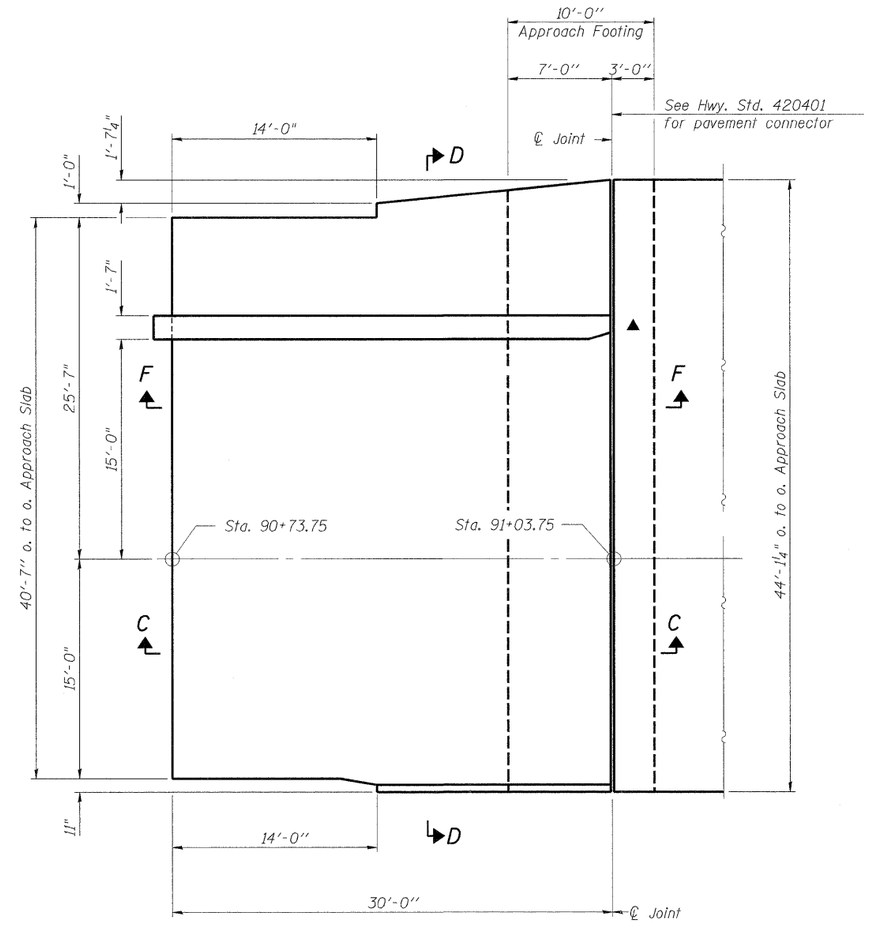

WEST APPROACH PLAN

(For reinf. see East Approach Plan)

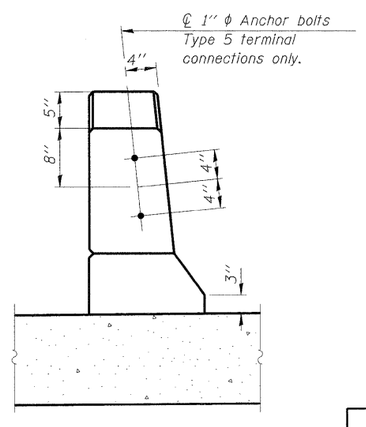

VIEW B-B

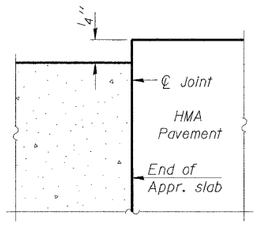

FLEXIBLE PAVEMENT

DETAIL A

Notes:
See sheet 13 of 47 for Sections C-C & D-D and Views E-E & F-F.
Omit Type B Inlet in West Approach.

BRIDGE APPROACH SLAB PLAN
STRUCTURE NUMBER 101-3100

PROFESSIONAL DESIGN FIRM LICENSE #184-001084

© Copyright Hanson Professional Services Inc. 2010

HANSON
Hanson Professional Services Inc.

JOB NO. 03R1807
DATE 10/26/10
SHEET NO. 12
47 SHEETS

F.A.U. RTE.	SECTION	COUNTY	TOTAL SHEETS	SHEET NO.
5103	03-00337-00-BR	Winnebago	66	27

CONTRACT NO. 85523
ILLINOIS FED. AID PROJECT

LAYOUT	JKR/SMK	08/23/10
DRAWN	MGM	10/25/10
REVIEWED	JKR/SMK	10/26/10

10-26-2010
I:\03_Jobs\03R1807\Struct\Sheet S-012-BA-01.dgn

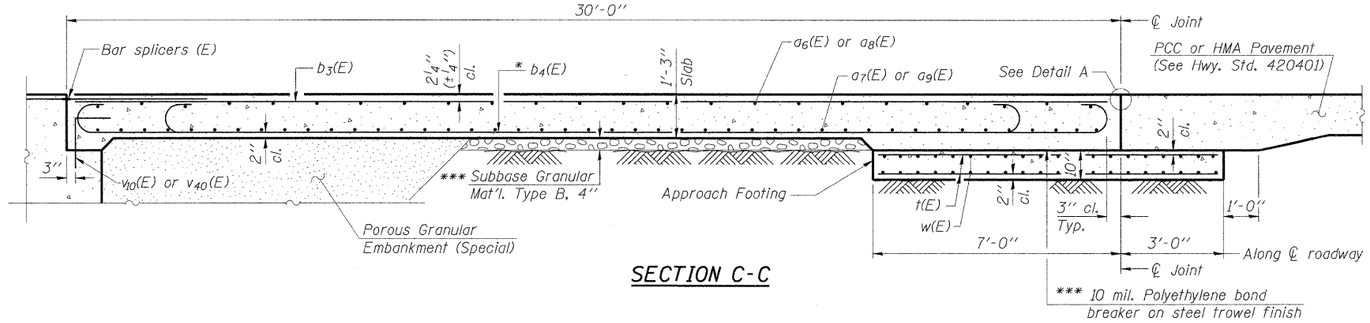

SECTION C-C

Notes:
See sheet 12 of 47 for Detail A and View B-B.
Approach slab and parapet concrete shall be paid for as Concrete Superstructure.
Approach footing concrete shall be paid for as Concrete Structures.
Reinforcement shall be paid for as Reinforcement Bars, Epoxy Coated.
For $v_{10}(E)$ or $v_{40}(E)$ bar details, see sheets 27 and 30 of 47.
The approach footing maximum applied service bearing pressure (Qmax) = 2.0 ksf.
For bar splicer details, see sheet 33 of 47.
Cost of excavation for approach footing included with Concrete Structures.
For Porous Granular Embankment (Special) and drainage treatment details, see sheet 2 of 47.
For additional parapet details, see sheets 9 and 10 of 47.

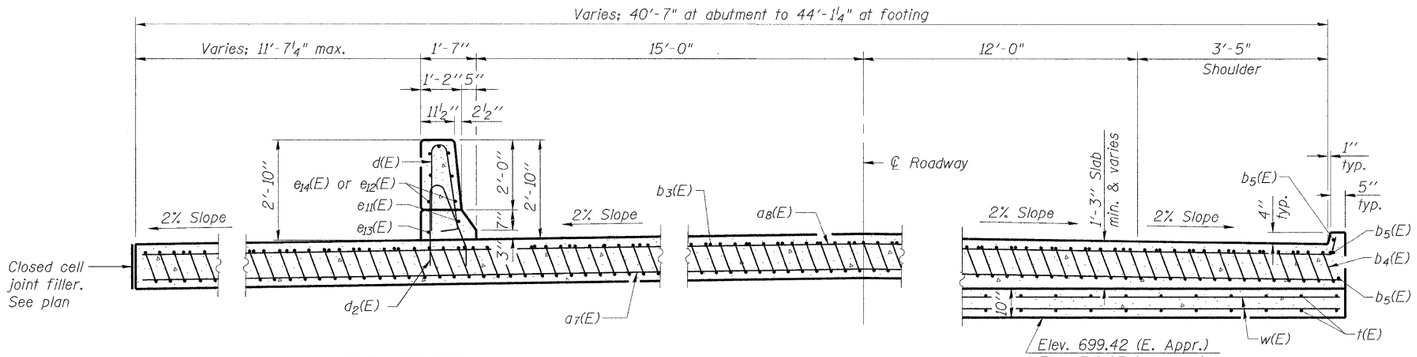

NEAR ABUTMENT

SECTION D-D

(See Plan for dimensions not shown)

AT APPROACH FOOTING

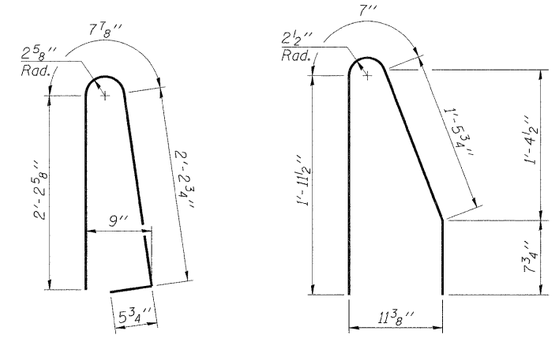

BAR d(E)

BAR d2(E)

* Tilt #9 $b_4(E)$ bars as required to maintain clearance.

*** Cost included with Concrete Superstructure.

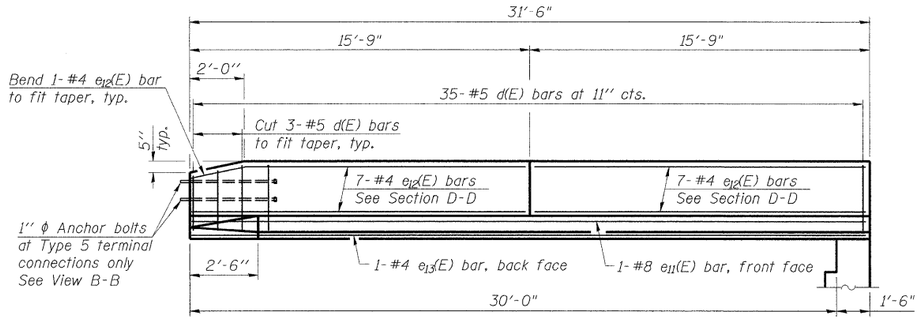

VIEW E-E

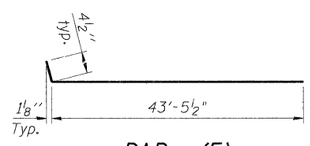

BAR a6(E)

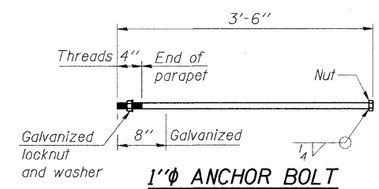

1"ϕ ANCHOR BOLT

(Cost included with Concrete Superstructure)

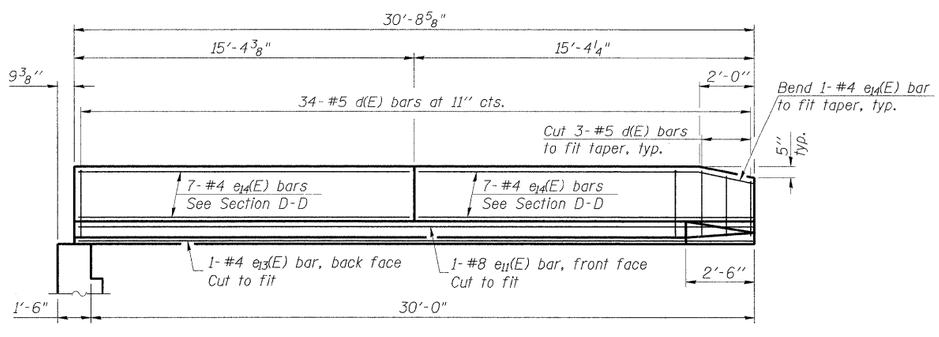

VIEW F-F

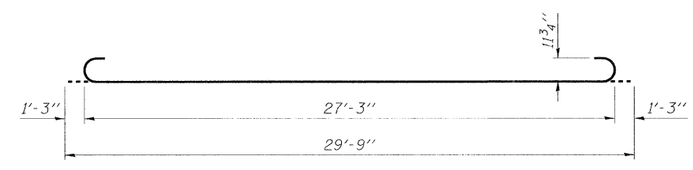

BAR b4(E)

TWO APPROACHES BILL OF MATERIAL

Bar	No.	Size	Length	Shape
a6(E)	26	#4	43'-10"	
a7(E)	44	#5	40'-3"	
a8(E)	24	#4	40'-3"	
a9(E)	48	#5	43'-9"	
b3(E)	70	#4	29'-8"	
b4(E)	198	#9	29'-9"	
b5(E)	6	#4	15'-8"	
d(E)	70	#5	5'-7"	
d2(E)	66	#5	4'-8"	
e11(E)	2	#8	31'-3"	
e12(E)	14	#4	15'-6"	
e13(E)	2	#4	31'-3"	
e14(E)	14	#4	15'-1"	
t(E)	180	#4	9'-8"	
w(E)	80	#5	43'-9"	
Concrete Superstructure			Cu. Yd.	134.3
Concrete Structures			Cu. Yd.	27.0
Reinforcement Bars, Epoxy Coated			Pound	32,960
Bridge Deck Grooving			Sq. Yd.	187
Protective Coat			Sq. Yd.	344

BRIDGE APPROACH SLAB DETAILS
STRUCTURE NUMBER 101-3100

PROFESSIONAL DESIGN FIRM LICENSE #184-001084

© Copyright Hanson Professional Services Inc. 2010

HANSON
Hanson Professional Services Inc.

JOB NO. 03R1807
DATE 10/26/10
SHEET NO. 13
47 SHEETS

F.A.U. RTE.	SECTION	COUNTY	TOTAL SHEETS	SHEET NO.
5103	03-00337-00-BR	Winnebago	66	28

CONTRACT NO. 85523
ILLINOIS FED. AID PROJECT

LAYOUT	JKR/SMK	08/23/10
DRAWN	MGM	10/25/10
REVIEWED	JKR/SMK	10/26/10

10-26-2010
I:\03Jobs\03R1807\Struct\Sheet5-01-5-SH-0-D.dgn

* Granular or solid flux filled headed studs conforming to Article 1006.32 of the Std. Specs., automatically end welded.

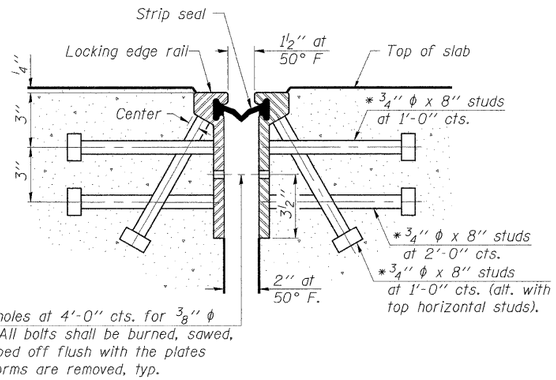

SECTION THRU ROLLED RAIL JOINT

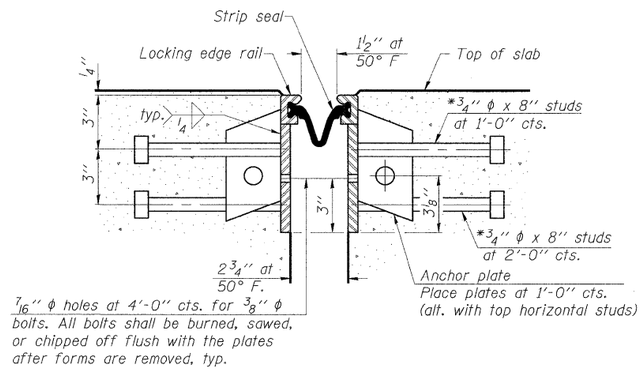

SECTION THRU WELDED RAIL JOINT

Notes:

The strip seal shall be made continuous and shall have a minimum thickness of 1/4". The configuration of the strip seal shall match the configuration of the Locking Edge Rails. Open or "webbed" strip seal gland configurations are not permitted. The gland shall be sized for a maximum rated movement of 4 inches.

The height and thickness of the Locking Edge Rails shown are minimum dimensions. The actual configuration of the Locking Edge Rails and matching strip seal may vary from manufacturer to manufacturer. Flanged edge rails will not be allowed. Locking Edge Rails may be spliced at slope discontinuities and stage construction joints.

The manufacturer's recommended installation methods shall be followed.

The joint opening and deck dimensions detailed on the superstructure are based on a rolled rail expansion joint. If the Contractor elects to use the welded rail expansion joint, the opening and deck dimensions shall be modified according to the dimensions detailed on this sheet. Required modifications shall be made at no additional cost to the contract.

All steel components shall be galvanized after fabrication according to Article 520.03 of the Standard Specifications.

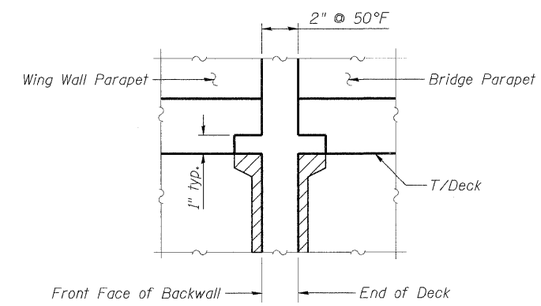

SECTION A-A

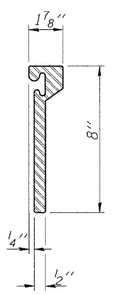

ROLLED EXTRUDED RAIL

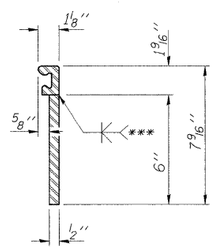

WELDED RAIL

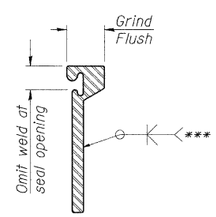

***Back gouge not required if complete joint penetration is verified by mock-up.

LOCKING EDGE RAIL SPLICE

The inside of the locking edge rail groove shall be free of weld residue.

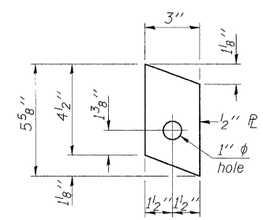

ANCHOR PL

(for welded rail)

LOCKING EDGE RAILS

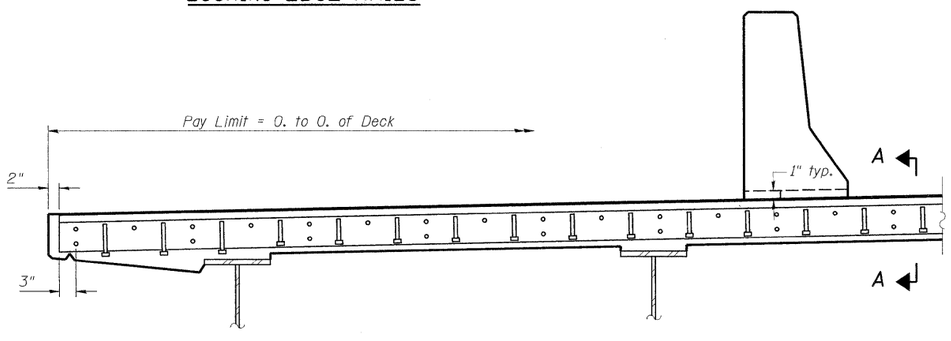

AT SOUTH PARAPET

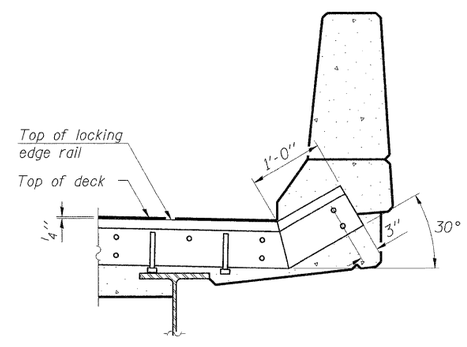

AT NORTH PARAPET

BILL OF MATERIAL

Item	Unit	Total
Preformed Joint Strip Seal	Foot	43.8

TYPICAL END TREATMENTS

PREFORMED JOINT STRIP SEAL STRUCTURE NUMBER 101-3100

PROFESSIONAL DESIGN FIRM LICENSE #184-001084

© Copyright Hanson Professional Services Inc. 2010

HANSON
Hanson Professional Services Inc.

JOB NO.		F.A.U. RTE.	SECTION	COUNTY	TOTAL SHEETS	SHEET NO.
03R1807	SHEET NO. 14	5103	03-00337-00-BR	Winnebago	66	29
DATE 10/26/10	47 SHEETS			CONTRACT NO. 85523		
			ILLINOIS FED. AID PROJECT			

LAYOUT	JKR/SMK	08/23/10
DRAWN	MGM	10/25/10
REVIEWED	JKR/SMK	10/26/10

ID:R5-2200
I:\03108\03R1807\Struct\Sheet\S-014-strip seal.dgn

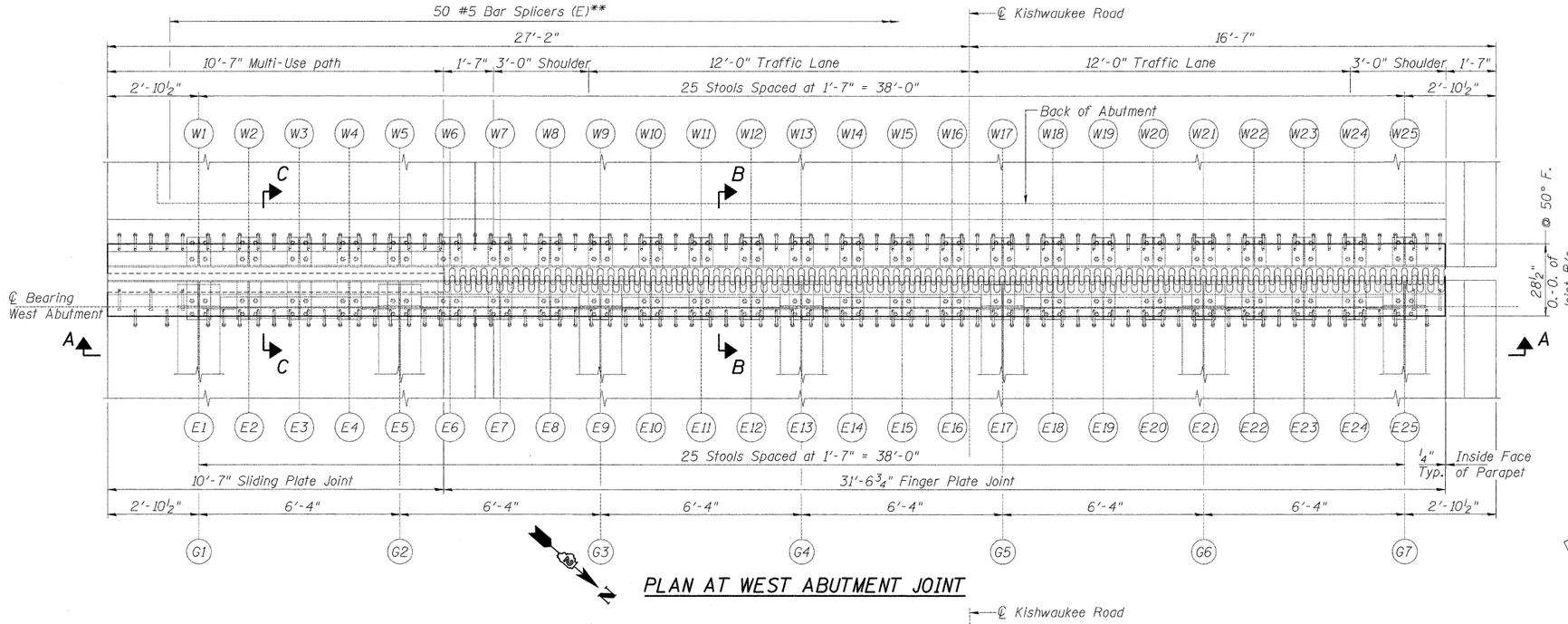

PLAN AT WEST ABUTMENT JOINT

** Bar Splicers for #5 (E) bars spaced as follows. Place 2 Bar Splicers between stools. Place 1 Bar Splicer between the Inside face of wingwall Foundation walls and Stool W1 and Stool W25. Abutment side only.

Notes:
1. Work this Sheet with Sheets 16 and 17 of 47.
2. The Joint Sliding Plate shall have a raised pattern.
3. Finger Plates and Stools shall conform to the requirements of AASHTO M270 Grade 50.
4. For Section B-B and Detail 1, see Sheet 16 of 47.
5. For Section C-C and Details 2 & 3, see Sheet 17 of 47.

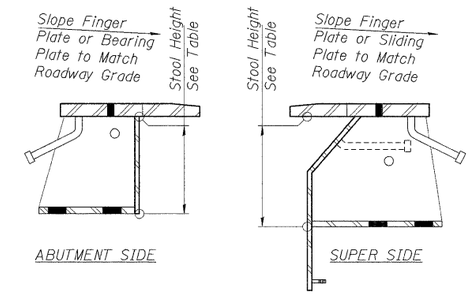

STOOL HEIGHT MEASUREMENT LOCATIONS

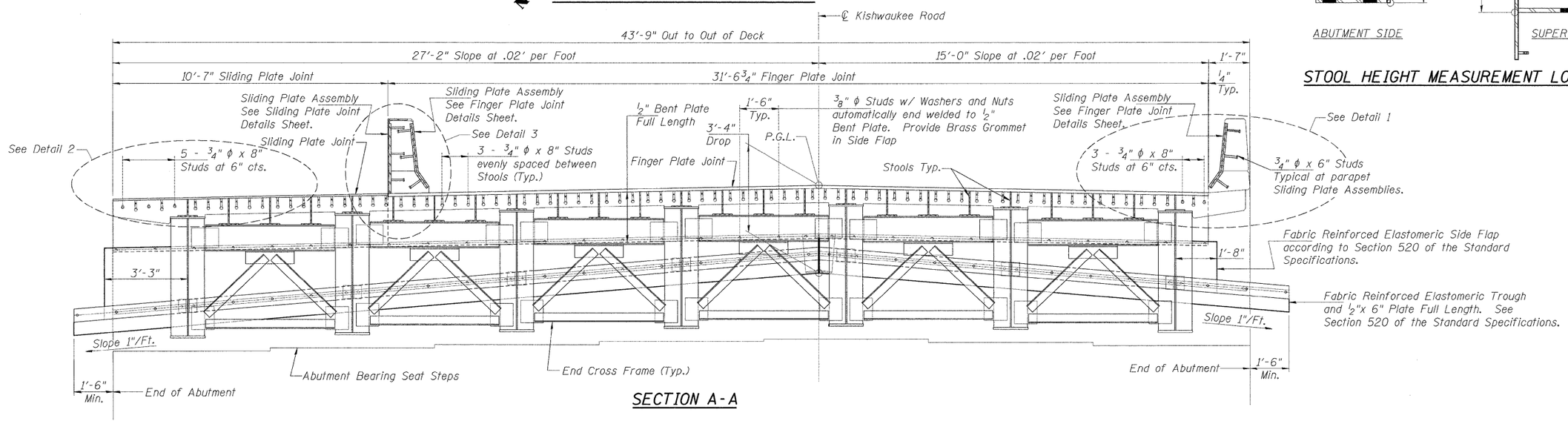

SECTION A-A

TABLE OF STOOL HEIGHTS

STOOL MARK (SUPER)	E1	E2	E3	E4	E5	E6	E7	E8	E9	E10	E11	E12	E13	E14	E15	E16	E17	E18	E19	E20	E21	E22	E23	E24	E25
STOOL HEIGHT	7 3/16"	11 5/16"	11 11/16"	12 1/16	7 3/16"	11 7/16"	11 13/16"	12 3/16"	7 5/16"	11 7/16"	11 13/16"	12 3/16"	7 5/16"	11 7/16"	11 13/16"	12 3/16"	7 5/16"	12 3/16"	11 13/16"	11 7/16"	7 5/16"	12 3/16"	11 13/16"	11 7/16"	7 5/16"
STOOL MARK (ABUT.)	W1	W2	W3	W4	W5	W6	W7	W8	W9	W10	W11	W12	W13	W14	W15	W16	W17	W18	W19	W20	W21	W22	W23	W24	W25
STOOL HEIGHT	11 3/8"	11 3/8"	11 3/8"	11 3/8"	12 7/8"	12 7/8"	12 7/8"	12 7/8"	13¼"	13¼"	13¼"	13¼"	15¼"	15¼"	15¼"	15¼"	15¼"	15¼"	15¼"	15¼"	15¼"	13¼"	13¼"	13¼"	13¼"

FINGER PLATE JOINT PLAN
STRUCTURE NUMBER 101-3100

PROFESSIONAL DESIGN FIRM LICENSE #184-001084

© Copyright Hanson Professional Services Inc. 2010

HANSON
Hanson Professional Services Inc.

JOB NO.	SHEET NO. 15
03R1807	47 SHEETS
DATE 10/26/10	

F.A.U. RTE.	SECTION	COUNTY	TOTAL SHEETS	SHEET NO.
5103	03-00337-00-BR	Winnebago	66	30
		CONTRACT NO. 85523		
	ILLINOIS	FED. AID PROJECT		

LAYOUT	JKR/SMK	08/23/10
DRAWN	MGM	10/25/10
REVIEWED	JKR/SMK	10/26/10

10-26-2010
I:\03Jobs\03R1807\Struct\Sheet's-015-Finger Pl Plan.dgn

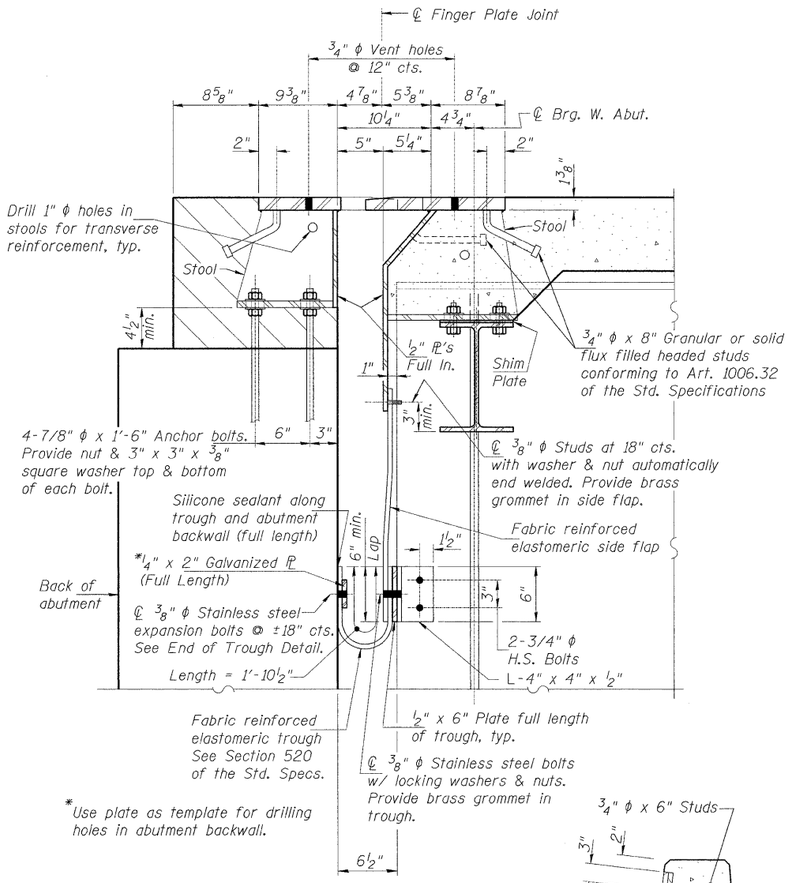

*Use plate as template for drilling holes in abutment backwall.

SECTION B-B

(At Right Angles to Bk. of Abut.)
Horizontal dimensions are at 50° F.

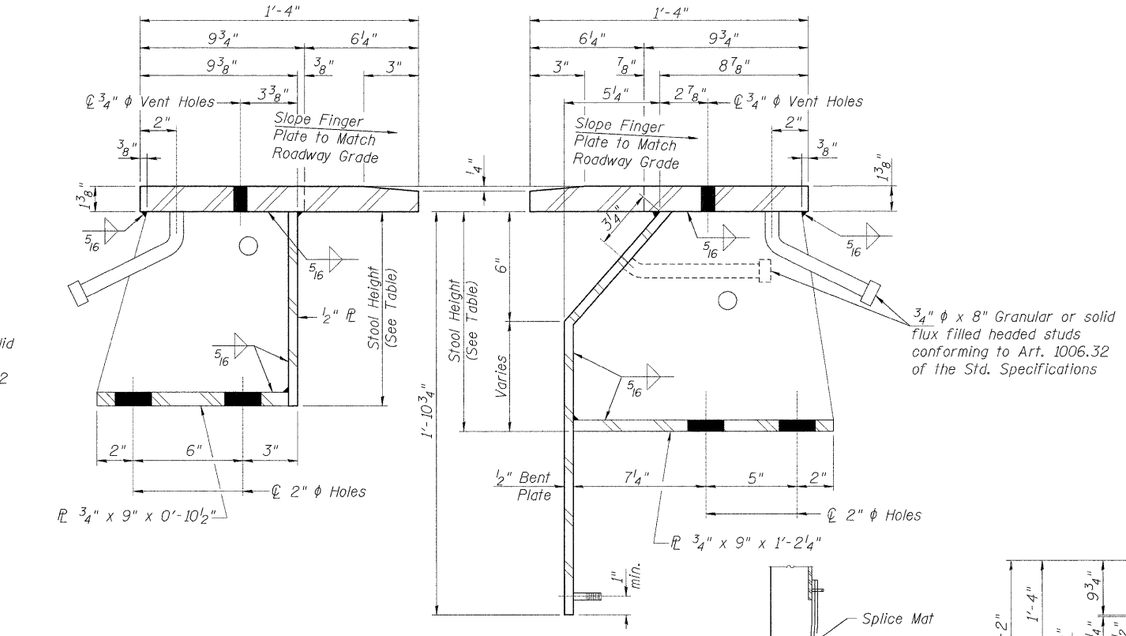

STOOLS DETAIL

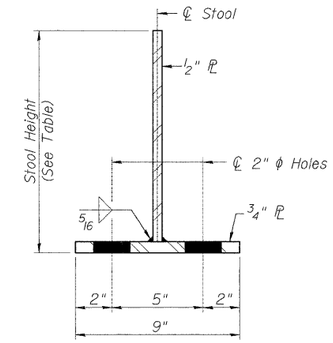

SECTION THRU STOOL

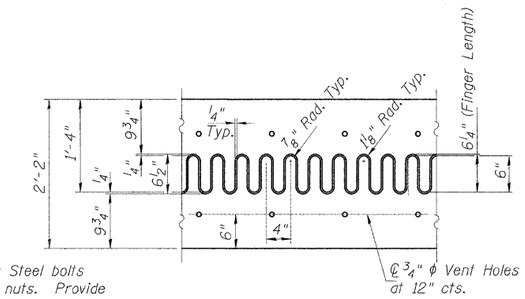

FLAME CUTTING DIAGRAM

Cut from PL 2 1/4" x 3'-2 7/8" x 41'-2 1/4"

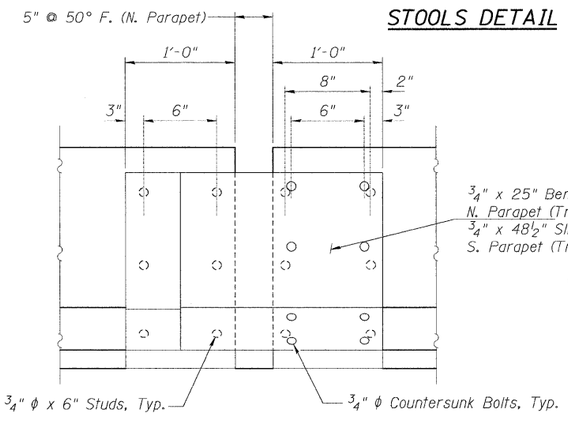

INSIDE ELEVATION OF N. PARAPET AT JOINT

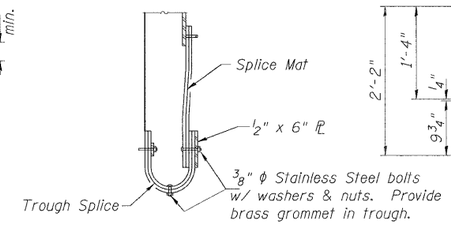

SECTION THRU TROUGH SPLICE

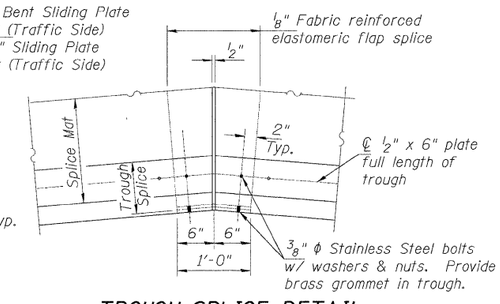

TROUGH SPLICE DETAIL

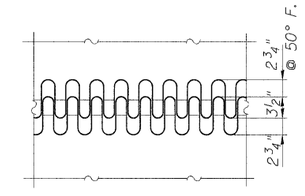

FINGER PLATE SETTING DIAGRAM

NOTES:
1. Work this sheet with Sheet 15 of 47.
2. Provide 1-1/4", 1-1/8" and 1-1/16" shim plates for stools supported by girders and cross frames.

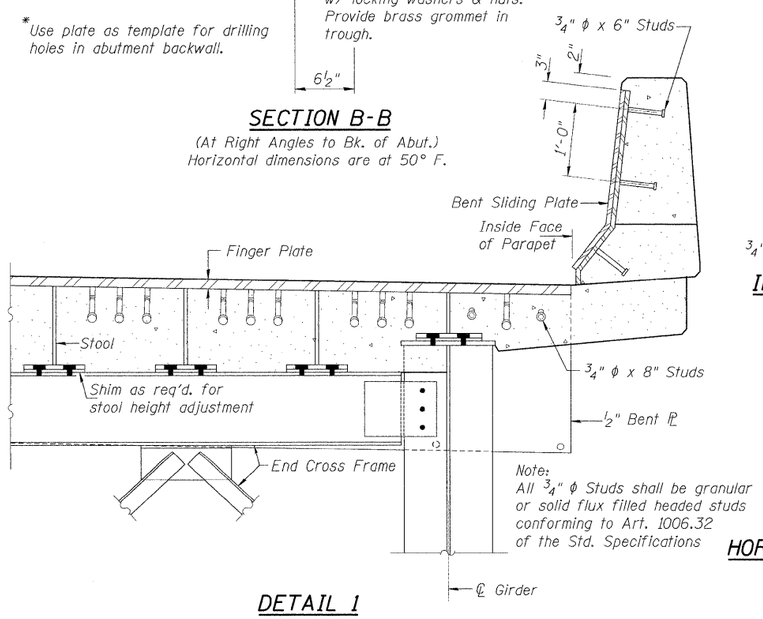

Note:
All 3/4" ϕ Studs shall be granular or solid flux filled headed studs conforming to Art. 1006.32 of the Std. Specifications

DETAIL 1

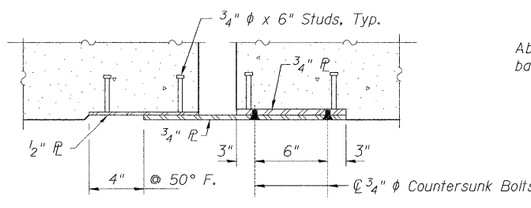

HORIZONTAL SECTION OF N. PARAPET AT JOINT

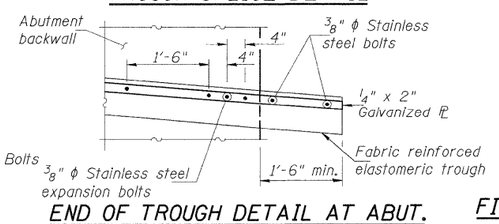

END OF TROUGH DETAIL AT ABUT.

FINGER PLATE JOINT DETAIL
STRUCTURE NUMBER 101-3100

PROFESSIONAL DESIGN FIRM LICENSE #184-001084

© Copyright Hanson Professional Services Inc. 2010

HANSON
Hanson Professional Services Inc.

JOB NO.	SHEET NO.	F.A.U. RTE.	SECTION	COUNTY	TOTAL SHEETS	SHEET NO.
03R1807	16	5103	03-00337-00-BR	Winnebago	66	31
DATE 10/26/10	47 SHEETS			CONTRACT NO. 85523		
			ILLINOIS FED. AID PROJECT			

LAYOUT	JKR/SMK	08/23/10
DRAWN	MGM	10/25/10
REVIEWED	JKR/SMK	10/26/10

10-26-2010
I:\03Jobs\03R807\Struct\Sheet S-016-Finger Pl Detail.dgn

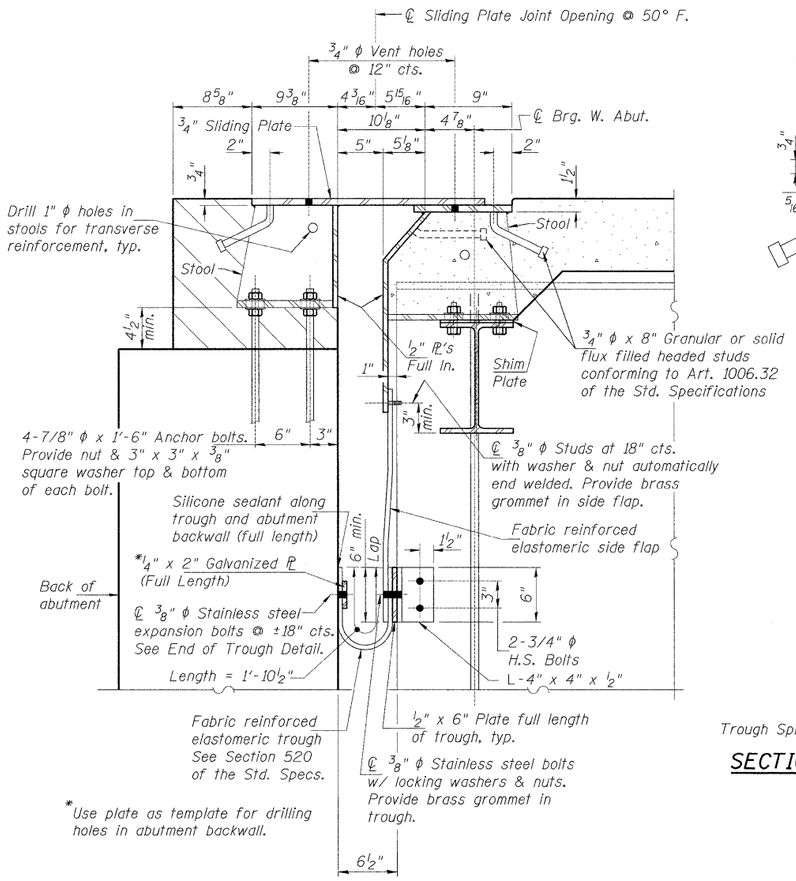

SECTION C-C

(At Right Angles to Bk. of Abut.)
Horizontal dimensions are at 50° F.

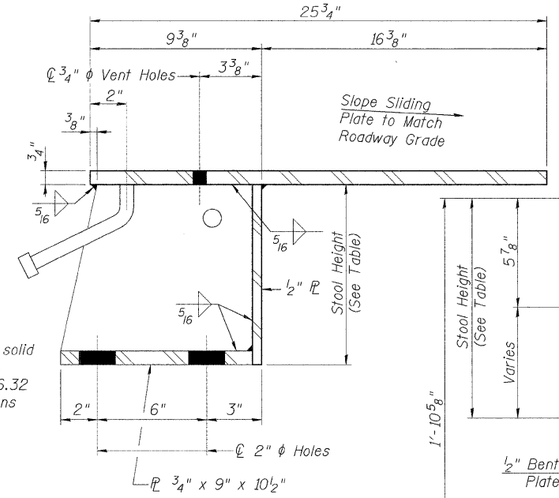

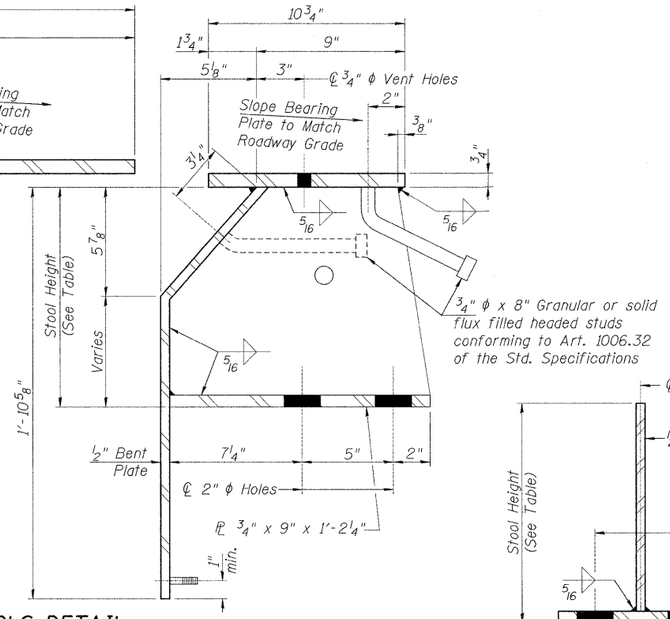

STOOLS DETAIL

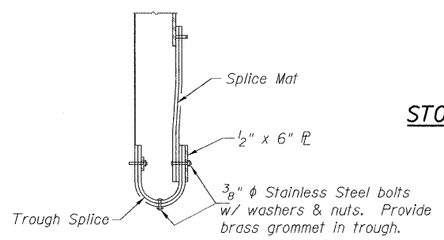

SECTION THRU TROUGH SPLICE

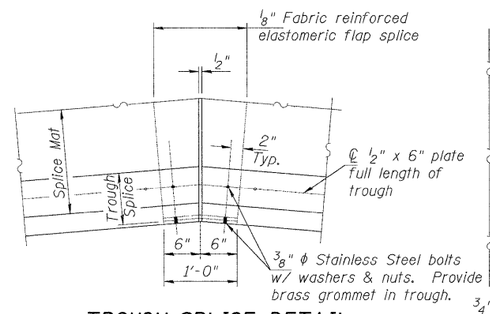

TROUGH SPLICE DETAIL

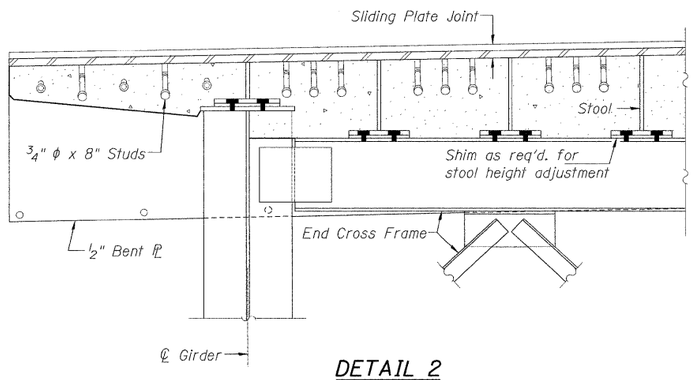

DETAIL 2

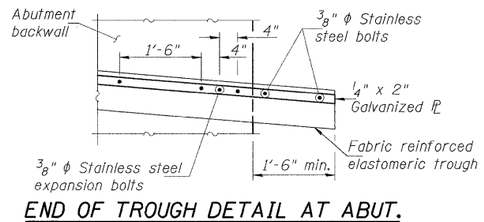

END OF TROUGH DETAIL AT ABUT.

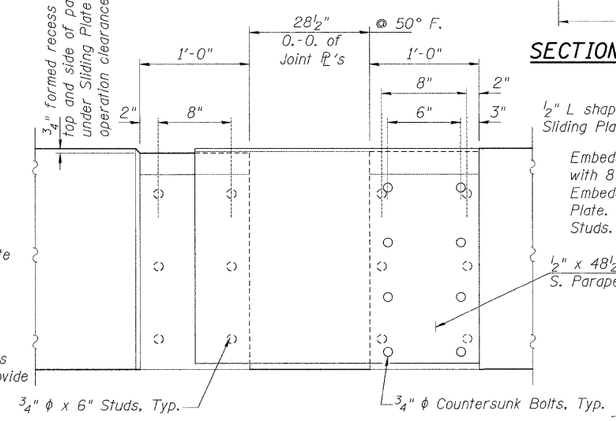

INSIDE ELEVATION OF S. PARAPET AT JOINT

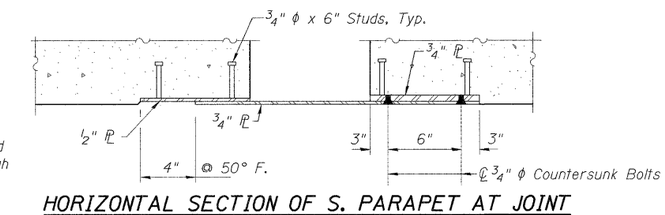

HORIZONTAL SECTION OF S. PARAPET AT JOINT

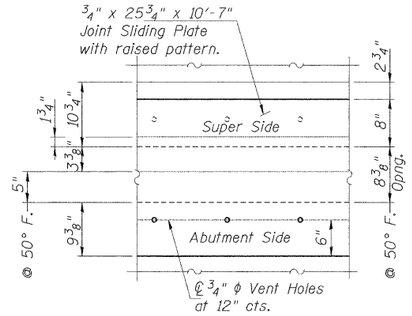

FINGER PLATE SETTING DIAGRAM

NOTES:
1. Work this sheet with Sheet __ of __.
2. Provide 1-1/4", 1-1/8" and 1-1/16" shim plates for stools supported by girders or cross frames.

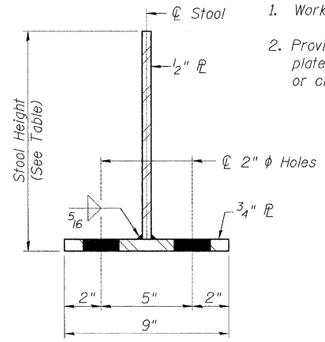

SECTION THRU STOOL

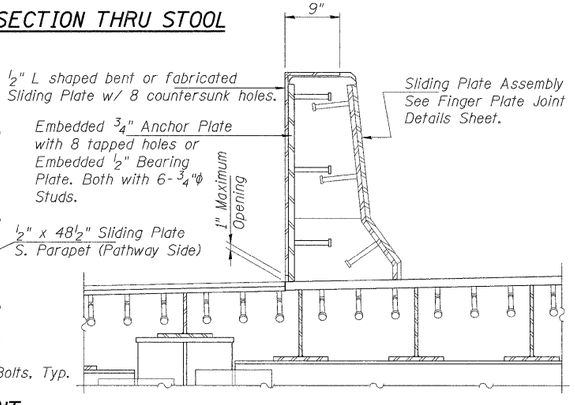

DETAIL 3

PROFESSIONAL DESIGN FIRM LICENSE #184-001084

© Copyright Hanson Professional Services Inc. 2010

HANSON
Hanson Professional Services Inc.

JOB NO.	SHEET NO.	F.A.U. RTE.	SECTION	COUNTY	TOTAL SHEETS	SHEET NO.
03R1807	17	5103	03-00337-00-BR	Winnebago	66	32
DATE 10/26/10	47 SHEETS			CONTRACT NO. 85523		
				ILLINOIS FED. AID PROJECT		

STRUCTURE NUMBER 101-3100

LAYOUT	JAR/SMK	08/23/10
DRAWN	MGM	10/25/10
REVIEWED	JAR/SMK	10/26/10

IDOB-3200
INDS_Bridge\03R1807\Struct Sheet\S-017-Sliding Pl Details.dgn

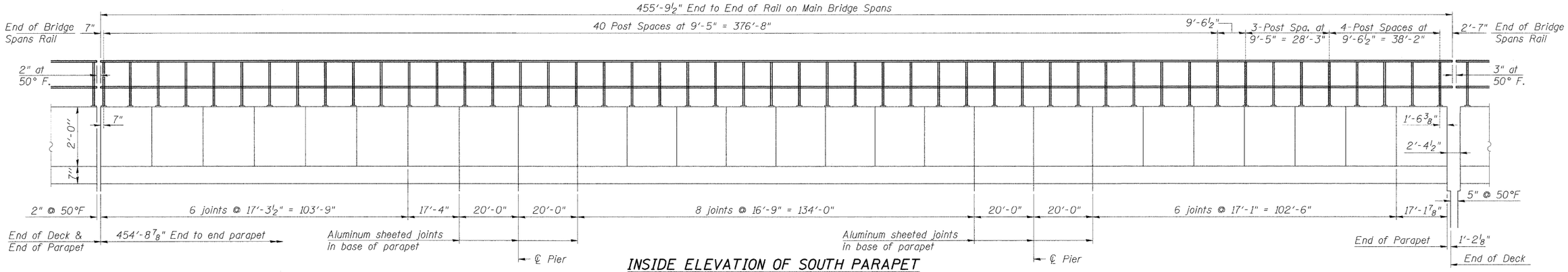

INSIDE ELEVATION OF SOUTH PARAPET

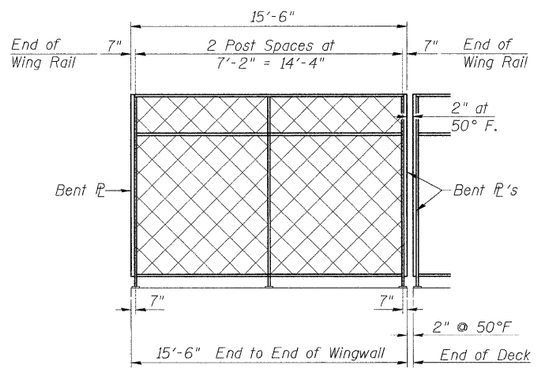

INSIDE ELEVATION - S.E. WINGWALL

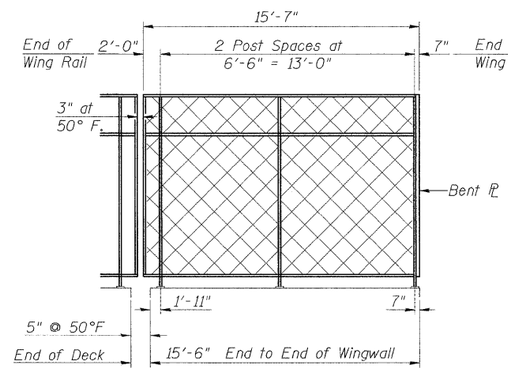

INSIDE ELEVATION - S.W. WINGWALL

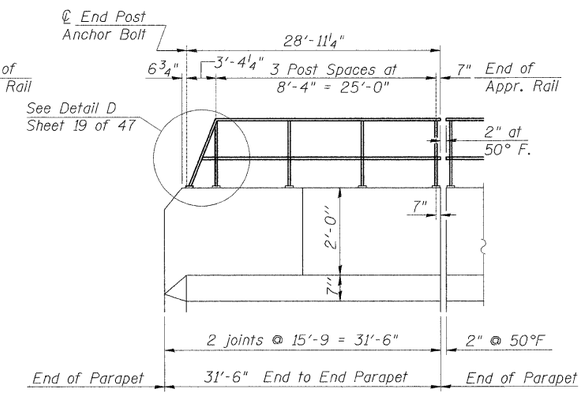

INSIDE ELEVATION - S.E. PARAPET

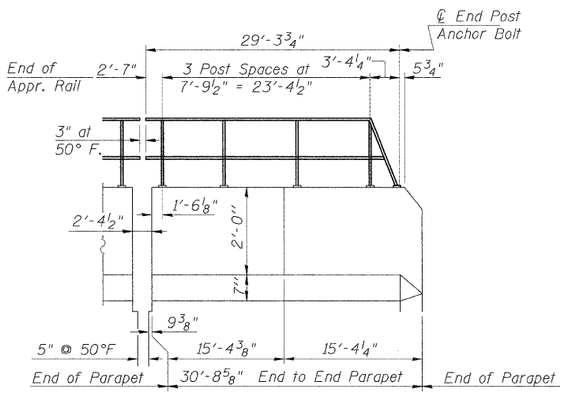

INSIDE ELEVATION - S.W. PARAPET

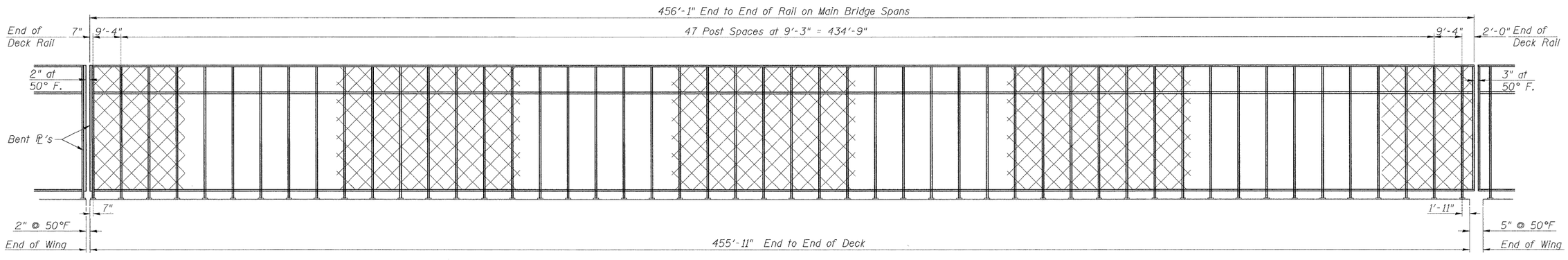

INSIDE ELEVATION OF BICYCLE RAILING

Note: See sheet 19 of 47 for Rail Post and Rail Details.

SUPERSTRUCTURE DETAILS
STRUCTURE NUMBER 101-3100

PROFESSIONAL DESIGN FIRM LICENSE #184-001084

© Copyright Hanson Professional Services Inc. 2010

HANSON
Hanson Professional Services Inc.

JOB NO.		F.A.U. RTE.	SECTION	COUNTY	TOTAL SHEETS	SHEET NO.
03R1807	SHEET NO. 18	5103	03-00337-00-BR	Winnebago	66	33
DATE 10/26/10	47 SHEETS			CONTRACT NO. 85523		
			ILLINOIS FED. AID PROJECT			

LAYOUT	JKR/SMK	08/23/10
DRAWN	MGM	10/25/10
REVIEWED	JKR/SMK	10/26/10

10-28-2010
H:\03Jobs\03R1807\Struct\Sheet\S-018-Railing Spaces and End Treatments.dgn

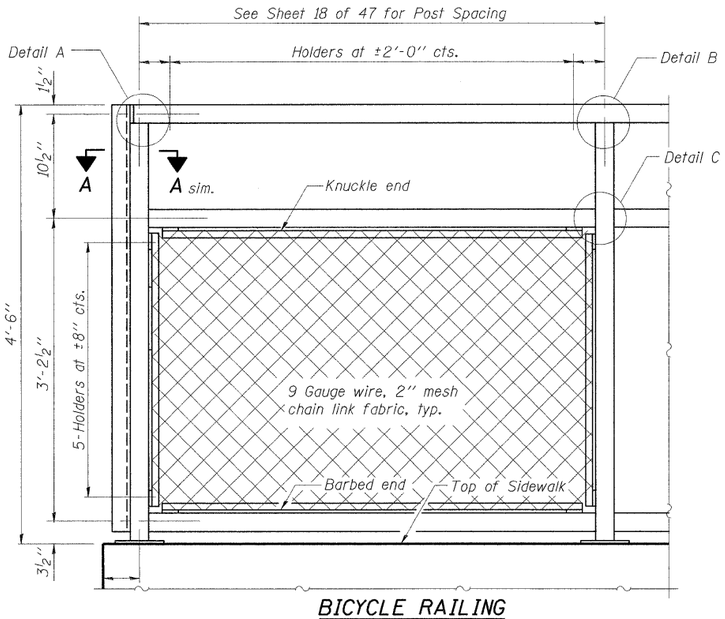

BICYCLE RAILING

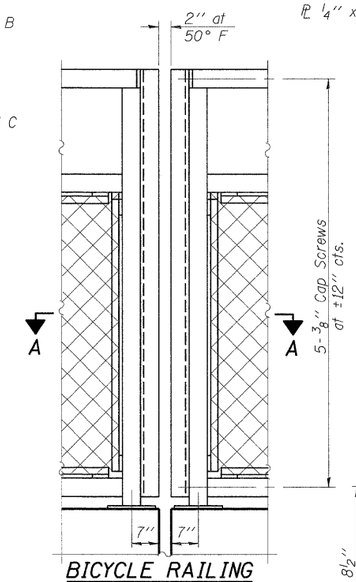

BICYCLE RAILING

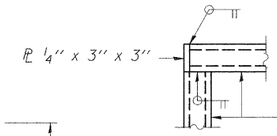

DETAIL A

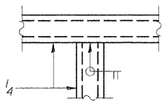

DETAIL B

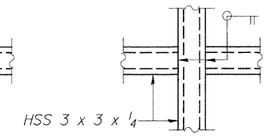

DETAIL C

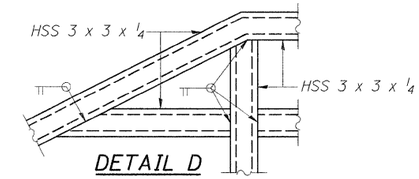

DETAIL D

All steel rail elements shall be galvanized according to Article 509.05 of the Standard Specifications.

See sheet 18 of 47 for Bicycle and Parapet Rail Post Spacings, Rail Termination and End Treatment Details.

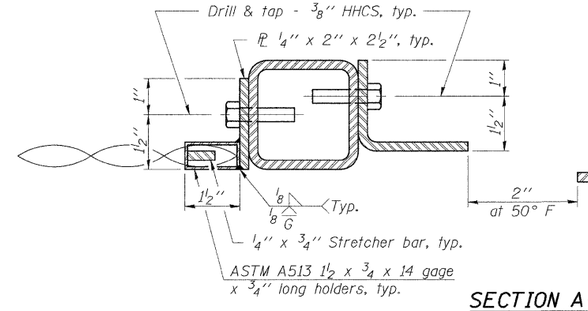

SECTION A-A

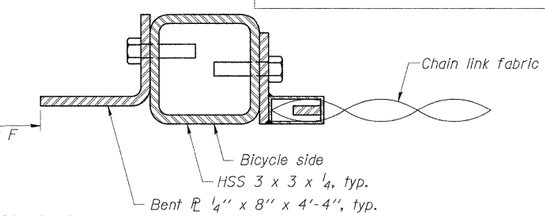

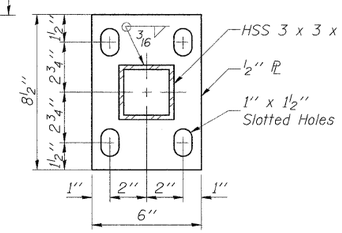

INTERIOR BASE PL

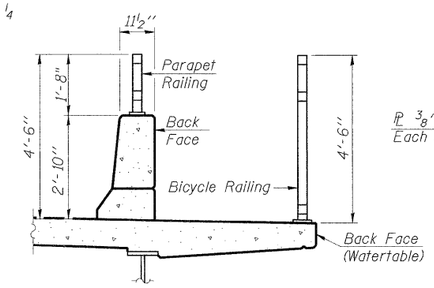

SECTION THRU DECK
(Looking East)

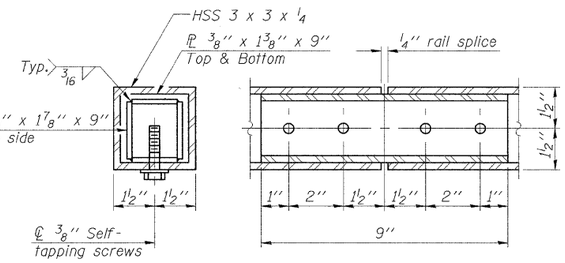

RAIL SPLICE

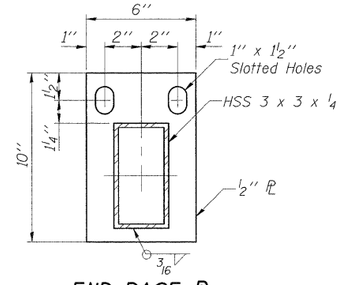

END BASE PL

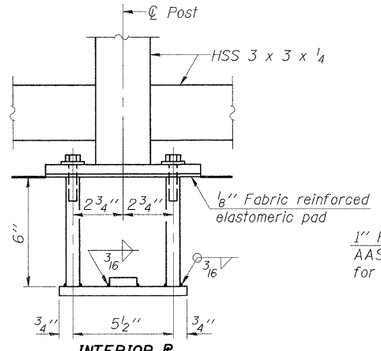

INTERIOR PL

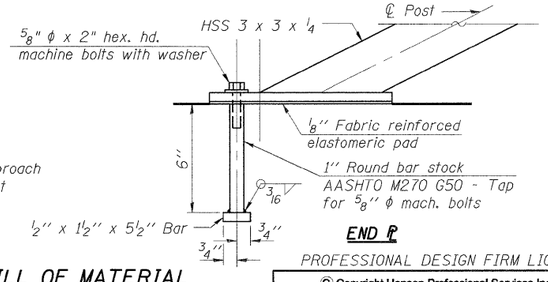

END PL

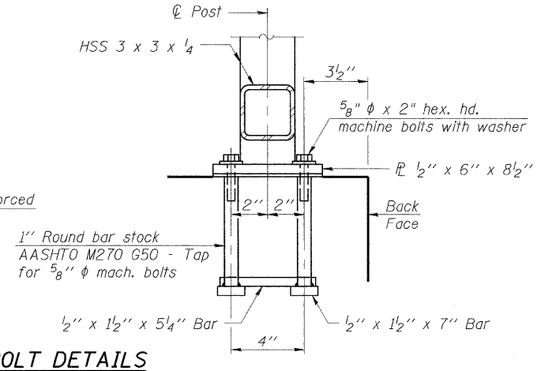

ANCHOR BOLT DETAILS

In lieu of the cast-in-place anchor device shown, the Contractor has the option of drilling and setting ⅝" ϕ anchor rods according to Article 509.06 of the Standard Specifications. Embedment shall be according to the manufacturer's specifications.

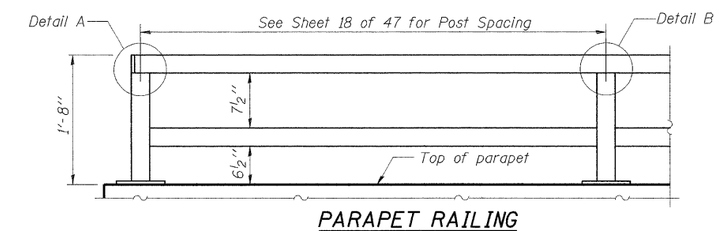

PARAPET RAILING ELEVATION

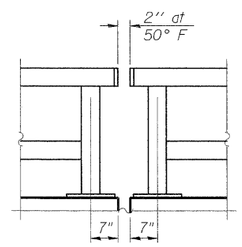

PARAPET RAILING ELEVATION AT EAST EXPANSION JOINT

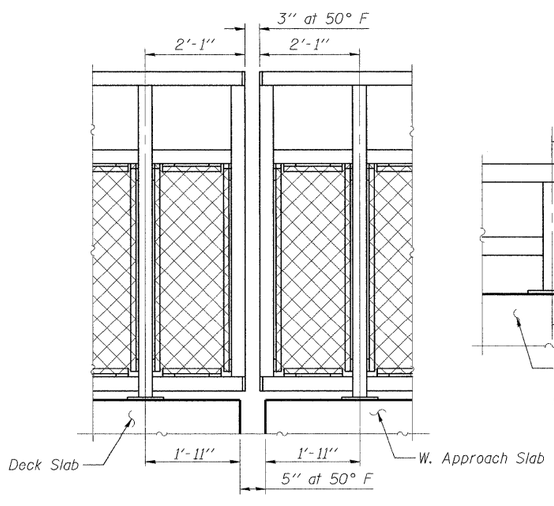

BICYCLE RAILING ELEVATION AT WEST EXPANSION JOINT

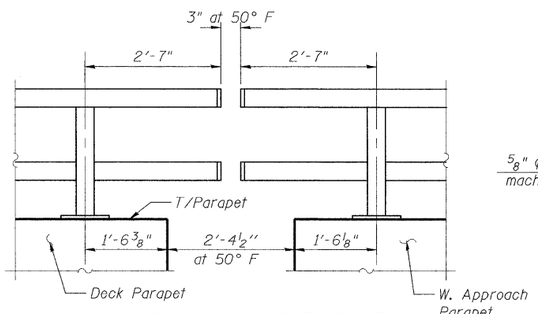

PARAPET RAILING ELEVATION AT WEST EXPANSION JOINT

BILL OF MATERIAL

Item	Unit	Quantity
Bicycle Railing	Foot	486.6
Parapet Railing	Foot	514.5

BICYCLE AND PARAPET RAILING
STRUCTURE NUMBER 101-3100

PROFESSIONAL DESIGN FIRM LICENSE #184-001084

© Copyright Hanson Professional Services Inc. 2010

HANSON
Hanson Professional Services Inc.

JOB NO.	SHEET NO.	F.A.U. RTE.	SECTION	COUNTY	TOTAL SHEETS	SHEET NO.
03R1807	19	5103	03-00337-00-BR	Winnebago	66	34
DATE 10/26/10	47 SHEETS			CONTRACT NO. 85523		
			ILLINOIS FED. AID PROJECT			

LAYOUT	JKR/SMK	08/23/10
DRAWN	MGM	10/25/10
REVIEWED	JKR/SMK	10/26/10

ID:928-2010
I:\03Jobs\03R807\Struct\Sheet's 01-19-Railing Detail.dgn

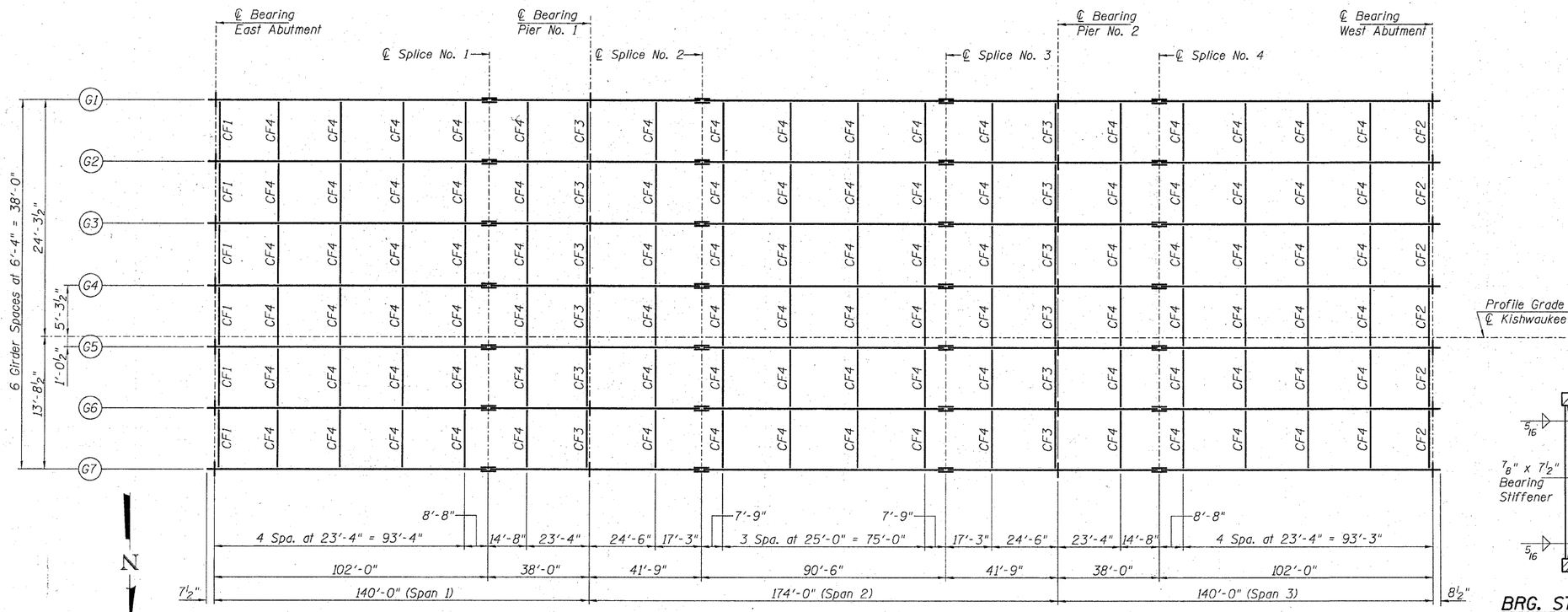

FRAMING PLAN

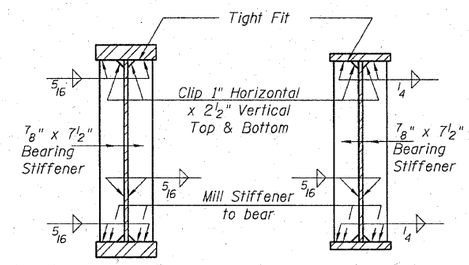

BRG. STIFFENERS AT PIERS

BRG. STIFFENERS AT ABUTMENTS

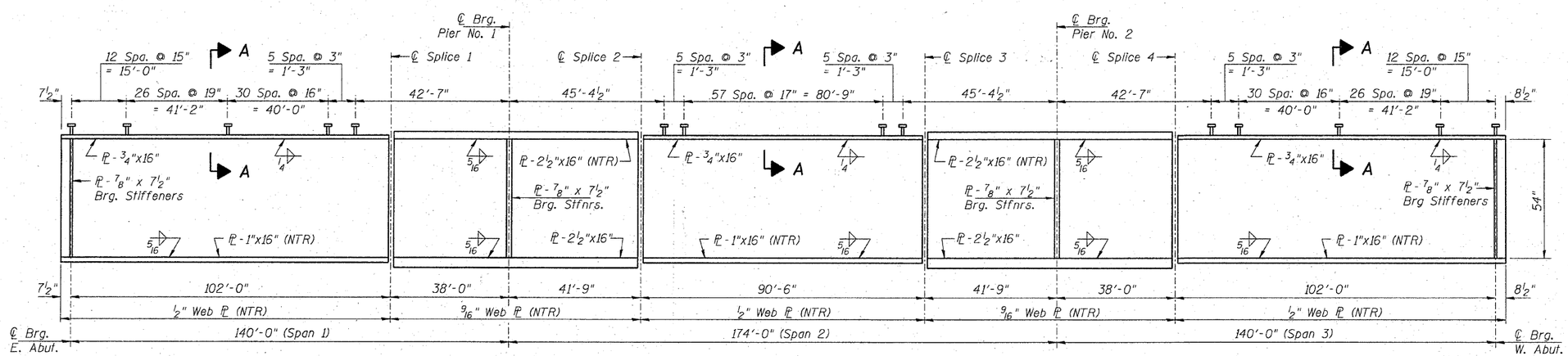

GIRDER ELEVATION

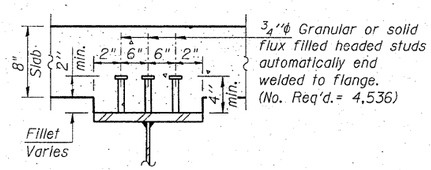

SECTION A-A

Notes:

All cross frames or diaphragms shall be installed as steel is erected and secured with erection pins and bolts except as otherwise noted. Individual cross frames or diaphragms at supports may be temporarily disconnected to install bearing anchor rods.

Load carrying components designated "NTR" shall conform to the Supplemental Requirements for Notch Toughness, Zone 2.

All girders and splice plates shall be AASHTO M270, Grade 50.

PROFESSIONAL DESIGN FIRM LICENSE #184-001084

© Copyright Hanson Professional Services Inc. 2010

HANSON
Hanson Professional Services Inc.

JOB NO. 03R1807
DATE 11/08/10
SHEET NO. 20
47 SHEETS

STRUCTURAL STEEL
STRUCTURE NUMBER 101-3100

F.A.U. RTE.	SECTION	COUNTY	TOTAL SHEETS	SHEET NO.
5103	03-00337-00-BR	Winnebago	66	35
		CONTRACT NO. 85523		
	ILLINOIS	FED. AID PROJECT		

LAYOUT	JKR/SMK	08/23/10
DRAWN	WDM	10/25/10
REVIEWED	JKR/SMK	10/26/10

n23-2010
n:\03jobs\03R1807\StructSheets\S-020-Framing Plan.dgn

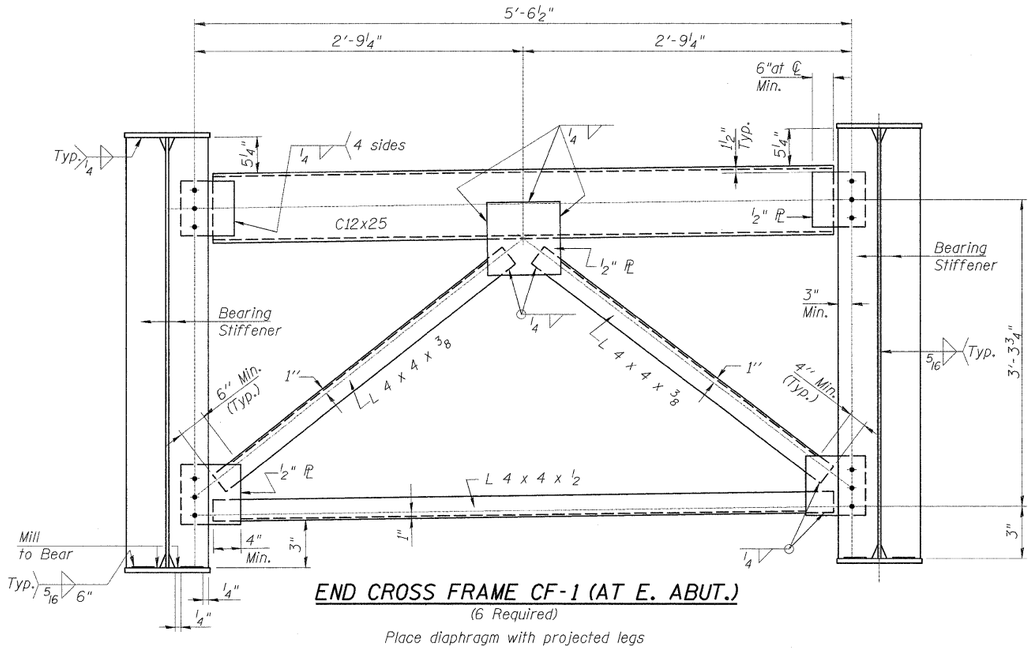

END CROSS FRAME CF-1 (AT E. ABUT.)

(6 Required)

Place diaphragm with projected legs outward from abutment backwall.

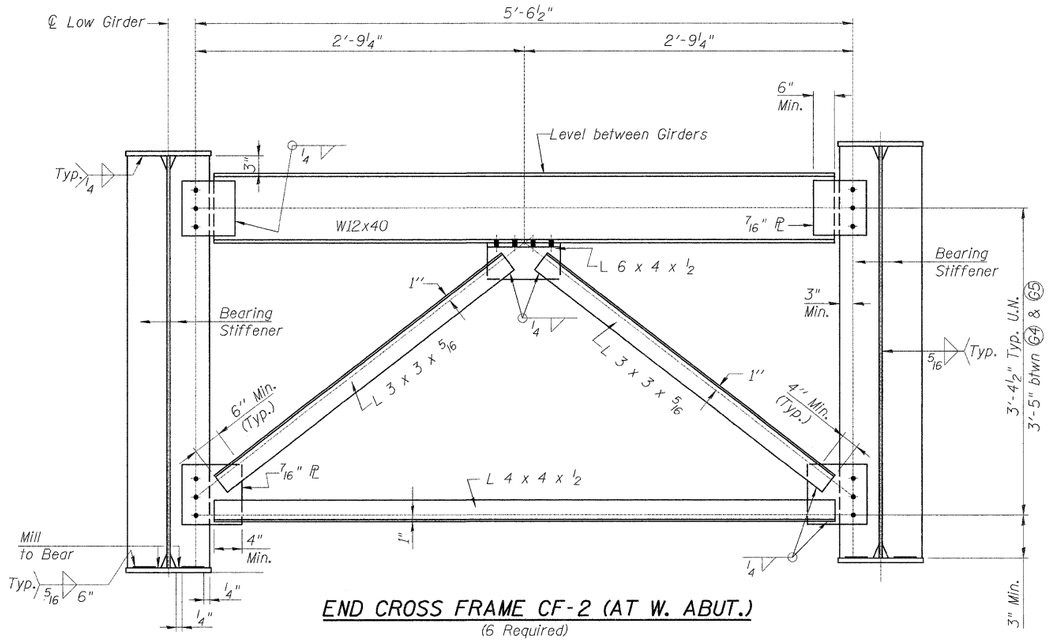

END CROSS FRAME CF-2 (AT W. ABUT.)

(6 Required)

Place diaphragm with projected legs outward from abutment backwall.

Note:
Provide 15/16" ϕ holes for ¾" ϕ High Strength Bolts with 1-Nut and 2-Hardened Washers each (Typical for all Cross Frame Connections).

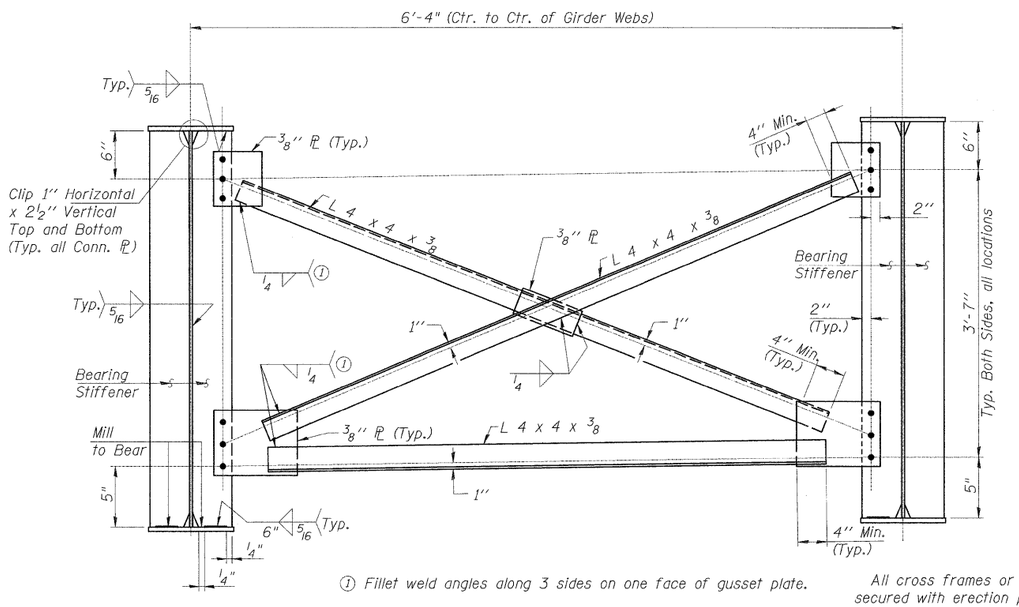

① Fillet weld angles along 3 sides on one face of gusset plate.

INTERIOR CROSS FRAME CF-3 (AT PIERS)

(12 Required)

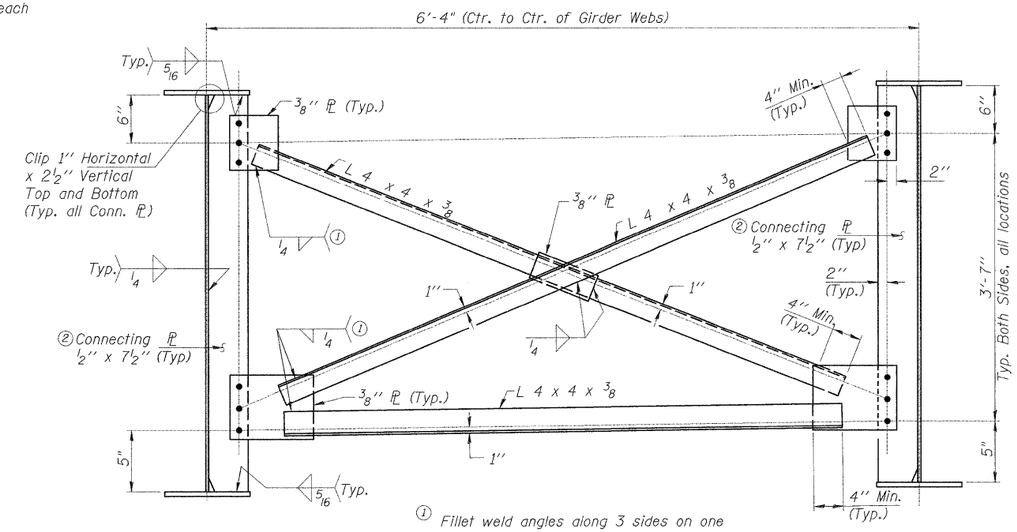

① Fillet weld angles along 3 sides on one face of gusset plate.

② Connecting Plate not required on outside of exterior girder.

INTERIOR CROSS FRAME CF-4

(96 Required)

All cross frames or diaphragms shall be installed as steel is erected and secured with erection pins and bolts except as otherwise noted. Individual cross frames or diaphragms at supports may be temporarily disconnected to install bearing anchor rods.

All cross frame members, except bearing stiffeners, shall be AASHTO M270, Grade 36.

CROSS FRAME DETAILS
STRUCTURE NUMBER 101-3100

PROFESSIONAL DESIGN FIRM LICENSE #184-001084

© Copyright Hanson Professional Services Inc. 2010

HANSON
Hanson Professional Services Inc.

JOB NO. 03R1807
DATE 10/26/10
SHEET NO. 21
47 SHEETS

F.A.U. RTE.	SECTION	COUNTY	TOTAL SHEETS	SHEET NO.
5103	03-00337-00-BR	Winnebago	66	36
		CONTRACT NO. 85523		
		ILLINOIS FED. AID PROJECT		

LAYOUT	JKR/SMK	08/23/10
DRAWN	MGM	10/25/10
REVIEWED	JKR/SMK	10/26/10

I:\03Jobs\03R\1807\Struct\Sheet\S-02\1-STr Steel Details.dgn

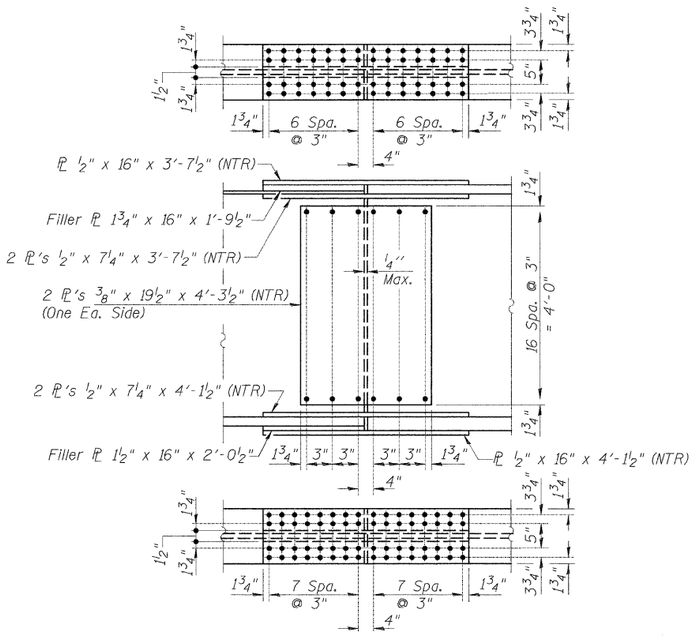

DETAIL - FIELD SPLICE

Note:
Load carrying components designated "NTR" shall conform to the Supplemental Requirements for Notch Toughness, Zone 2.
Use ⅞" ϕ H.S. Bolts with 15/16" ϕ holes for all splice connections.
Splice plates shall be AASHTO M270, Grade 50.

INTERIOR GIRDER MOMENT TABLE					
			0.4 Sp. 1 0.6 Sp. 3	0.5 Sp. 2	Piers
	I_s	(in^4)	27430	27430	71268
	$I_c(n)$	(in^4)	62379	62379	-
	$I_c(3n)$	(in^4)	45778	45778	-
	S_s	(in^3)	1056	1056	2416
	$S_c(n)$	(in^3)	1399	1399	-
	$S_c(3n)$	(in^3)	1279	1279	-
	Z	(in^3)	-	-	-
	$\wp$	(k/')	0.865	0.865	1.516
	$M\wp$	('k)	1018	780	4086
	$s\wp$	(k/')	0.434	0.434	-
	$M_s\wp$	('k)	542	444	-
	$M\text{L}$	('k)	1304	1335	1753
	M_{IM}	('k)	246	223	311
	$\frac{5}{3}[M\text{L} + I]$	('k)	2584	2597	3440
	M_a	('k)	5387	4968	9783
***	M_u	('k)	5942	6111	-
	f_s $\wp$ non-comp	(ksi)	11.57	8.86	20.30
	f_s $\wp$ (comp)	(ksi)	5.08	4.17	-
	f_s $\frac{5}{3}[M\text{L} + M_I]$	(ksi)	22.17	22.28	17.09
	f_s (Overload)	(ksi)	38.82	35.31	37.38
****	f_s (Total)	(ksi)	-	-	48.60
	VR	(k)	70	56	-

INTERIOR GIRDER REACTION TABLE			
		E. & W. Abut.	Pier 1 & 2
	$R\wp$	(k)	65.9	246.3
	$R\text{L}$	(k)	52.9	105.2
	R_I	(k)	10.0	18.6
	R_{Total}	(k)	128.8	370.1

*** Compact section
**** Braced non-compact and partially braced section

I_s, S_s: Non-composite moment of inertia and section modulus of the steel section used for computing f_s(Total and Overload) due to non-composite dead loads ($in.^4$ and $in.^3$).
$I_c(n)$, $S_c(n)$: Composite moment of inertia and section modulus of the steel and deck based upon the modular ratio, "n", used for computing f_s(Total and Overload) due to short-term composite live loads ($in.^4$ and $in.^3$).
$I_c(3n)$, $S_c(3n)$: Composite moment of inertia and section modulus of the steel and deck based upon 3 times the modular ratio, "3n", used for computing f_s(Total and Overload) due to long-term composite (superimposed) dead loads ($in.^4$ and $in.^3$).
Z: Plastic Section Modulus of the steel section in non-composite areas ($in.^3$).
$\wp$: Un-factored non-composite dead load (kips/ft.).
$M\wp$: Un-factored moment due to non-composite dead load (kip-ft.).
$s\wp$: Un-factored long-term composite (superimposed) dead load (kips/ft.)
$M_s\wp$: Un-factored moment due to long-term composite (superimposed) dead load (kip-ft.).
$M\text{L}$: Un-factored live load moment (kip-ft.).
M_I: Un-factored moment due to impact (kip-ft.).
M_a: Factored design moment (kip-ft.).
$1.3\ [M\wp + M_s\wp + \frac{5}{3}(M\text{L} + M_I)]$
M_u: Compact composite moment capacity according to AASHTO LFD 10.50.1.1 or compact non-composite moment capacity according to AASHTO LFD 10.48.1 (kip-ft.).
f_s (Overload): Sum of stresses as computed from the moments below (ksi).
$M\wp + M_s\wp + \frac{5}{3}(M\text{L} + M_I)$
f_s (Total): Sum of stresses as computed from the moments below on non-compact section (ksi).
$1.3\ [M\wp + M_s\wp + \frac{5}{3}(M\text{L} + M_I)]$
VR: Maximum L + impact shear range within the composite portion of the span for stud shear connector design (kips).

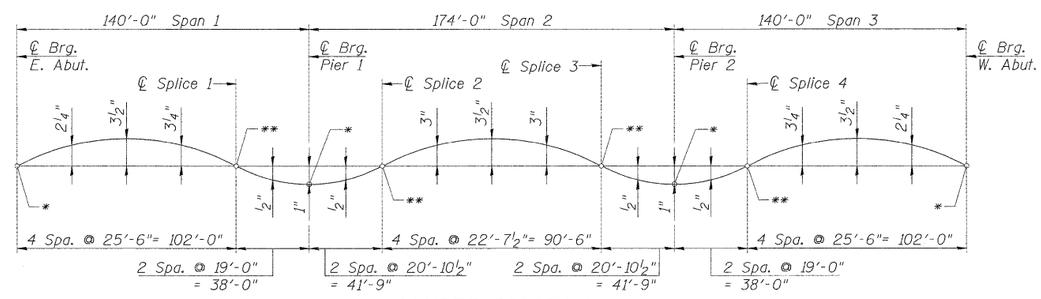

CAMBER DIAGRAM

* See Table for Final Top of Web Elevations at abutments and piers.
** Theoretical Top of Web Elevations before dead load deflections.

TOP of WEB ELEVATIONS TABLE

For Fabrication Only

Girder Number	℄ Brg. E. Abut.	℄ Splice No. 1	℄ Brg. Pier 1	℄ Splice No. 2	℄ Splice No. 3	℄ Brg. Pier 2	℄ Splice No. 4	℄ Brg. W. Abut.
Girder 1	701.55	703.62	704.32	705.28	707.18	707.98	708.87	711.09
Girder 2	701.68	703.75	704.45	705.40	707.30	708.11	709.00	711.21
Girder 3	701.80	703.87	704.58	705.53	707.43	708.23	709.12	711.34
Girder 4	701.93	704.00	704.70	705.66	707.56	708.36	709.25	711.47
Girder 5	702.02	704.08	704.79	705.74	707.64	708.44	709.33	711.55
Girder 6	701.89	703.96	704.66	705.61	707.51	708.32	709.21	711.42
Girder 7	701.76	703.83	704.54	705.49	707.39	708.19	709.08	711.30

SPLICE AND CAMBER DETAILS
STRUCTURE NUMBER 101-3100

PROFESSIONAL DESIGN FIRM LICENSE #184-001084

© Copyright Hanson Professional Services Inc. 2010

HANSON
Hanson Professional Services Inc.

JOB NO.	SHEET NO. 22
03R1807	
DATE 10/26/10	47 SHEETS

F.A.U. RTE.	SECTION	COUNTY	TOTAL SHEETS	SHEET NO.
5103	03-00337-00-BR	Winnebago	66	37
		CONTRACT NO. 85523		
		ILLINOIS FED. AID PROJECT		

LAYOUT	JKR/SMK	08/23/10
DRAWN	MGM	10/25/10
REVIEWED	JKR/SMK	10/26/10

10-26-2010
N:\03Jobs\03R1807.Structure\Sheet\5-G22-Str Steel Detail.dgn

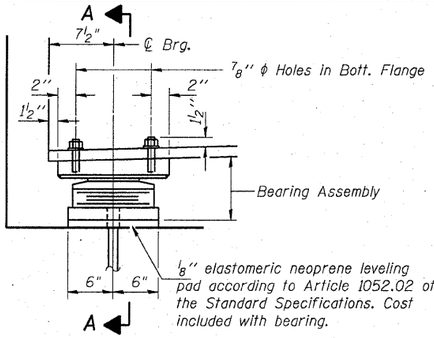

ELEVATION AT EAST ABUT.

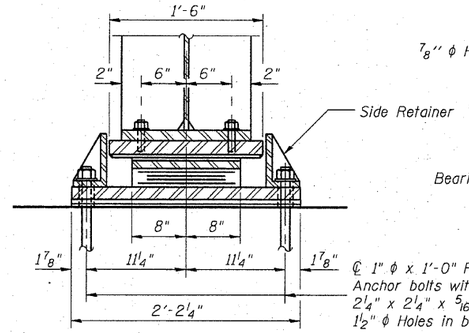

SECTION A-A

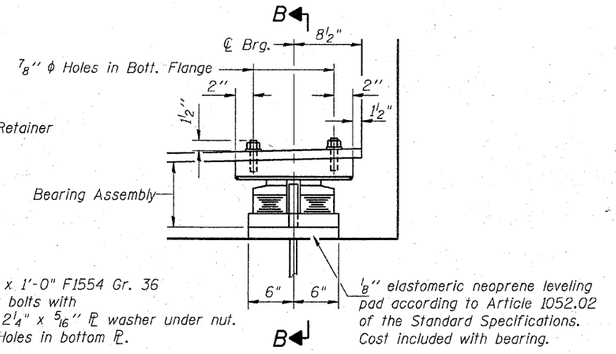

ELEVATION AT WEST ABUT.

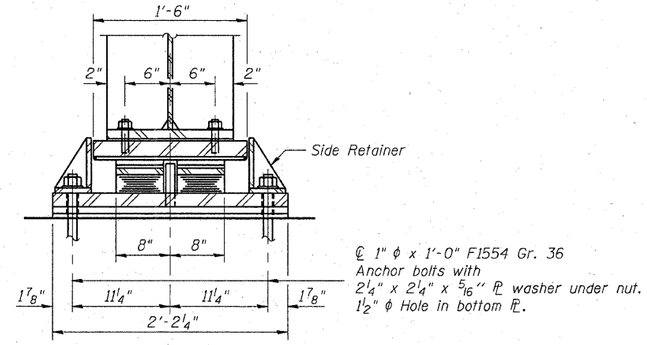

SECTION B-B

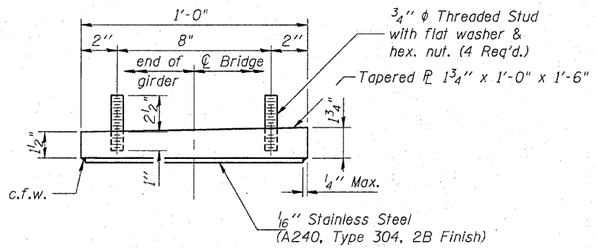

TYPE II TOP BEARING ASSEMBLY

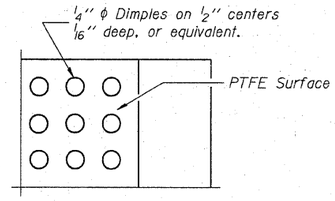

PLAN-PTFE SURFACE

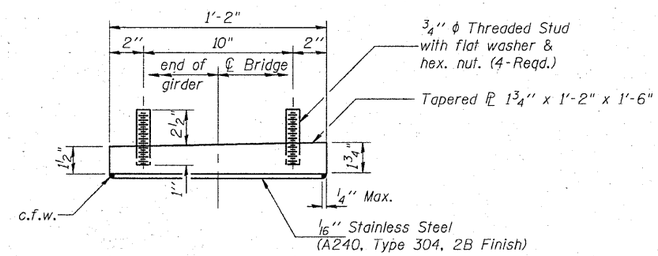

TYPE III TOP BEARING ASSEMBLY

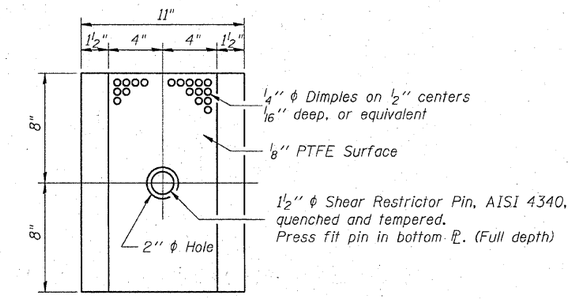

PLAN-PTFE ELASTOMERIC BRG.

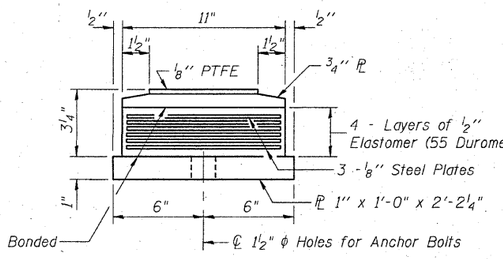

TYPE II BOTTOM BEARING ASSEMBLY

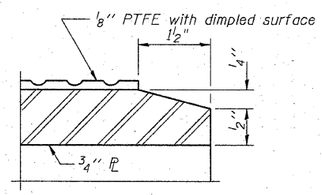

SECTION THRU PTFE

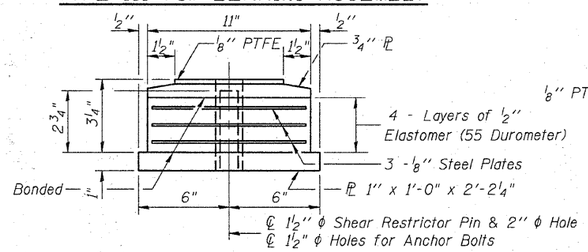

TYPE III BOTTOM BEARING ASSEMBLY

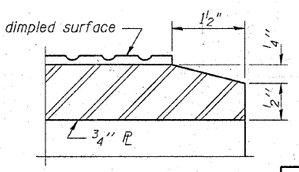

SECTION THRU PTFE

TYPE II ELASTOMERIC EXP. BRG. AT EAST ABUTMENT

TYPE III ELASTOMERIC EXP. BRG. AT WEST ABUTMENT

BILL OF MATERIAL

Item	Unit	Total
Elastomeric Bearing Assembly Type II	Each	7
Elastomeric Bearing Assembly Type III	Each	7
Anchor Bolts, 1"	Each	28
Anchor Bolts, 1½"	Each	14

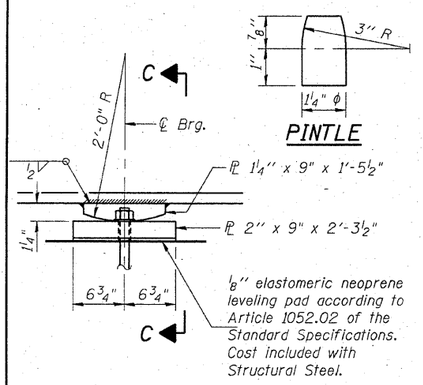

ELEVATION AT PIER 1

PINTLE

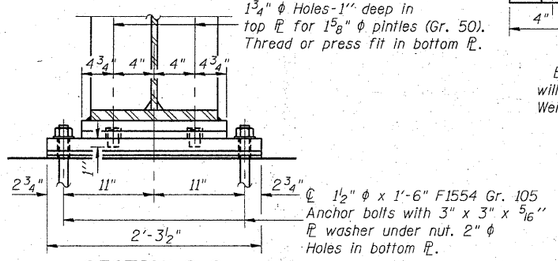

SECTION C-C

LOW PROFILE FIXED BEARING

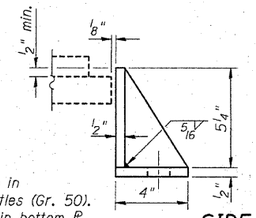

SIDE RETAINER

Equivalent rolled angle with stiffeners will be allowed in lieu of welded plates. Weight included with Structural Steel.

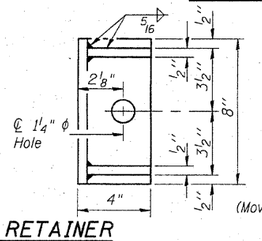

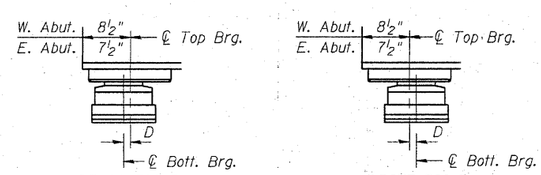

BELOW 50° F. (Move bott. brg. away from fixed brg.)

ABOVE 50° F. (Move bott. brg. toward fixed brg.)

SETTING ANCHOR BOLTS AT EXP. BRG.

D=⅛" per each 100' of expansion for every 15° temp. change from the normal temp. of 50° F.

Notes:

Anchor bolts at fixed bearings may be built into the masonry. See Sheet 31 of 47 for Anchor Bolt location.

The ⅛" PTFE Sheet shall be bonded directly to the top steel plate with a two-component, medium viscosity epoxy resin, conforming to the requirements of the Federal Specification MMM-A-134, Type I. The bond agent shall be applied on the full area of the contact surfaces.

Bonding of ⅛" TFE Sheet during vulcanizing process will be permitted provided the process and method of adjusting assembly height is approved by the Engineer.

All structural steel bearing plates and pintles for low profile fixed bearings and Elastomeric Bearing Assemblies shall be AASHTO M270, Grade 50.

ELASTOMERIC AND FIXED BEARING DETAILS
STRUCTURE NUMBER 101-3100

PROFESSIONAL DESIGN FIRM LICENSE #184-001084

© Copyright Hanson Professional Services Inc. 2010

HANSON
Hanson Professional Services Inc.

JOB NO.		F.A.U. RTE.	SECTION	COUNTY	TOTAL SHEETS	SHEET NO.
03R1807	SHEET NO. 23	5103	03-00337-00-BR	Winnebago	66	38
DATE 11/08/10	47 SHEETS			CONTRACT NO. 85523		
			ILLINOIS	FED. AID PROJECT		

LAYOUT	WRF/SMK	08/23/10
DRAWN	MGM	10/25/10
REVIEWED	WRF/SMK	10/26/10

11/23/2010
I:\03Jobs\03R1807\Structl\Sheet\S-023-Bear Det.dgn

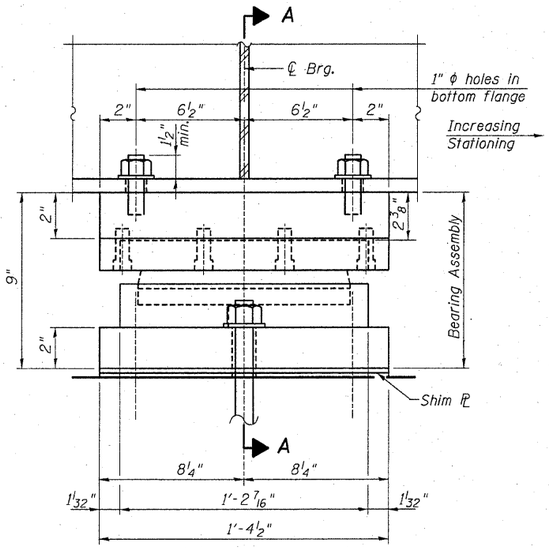

ELEVATION AT PIER 2

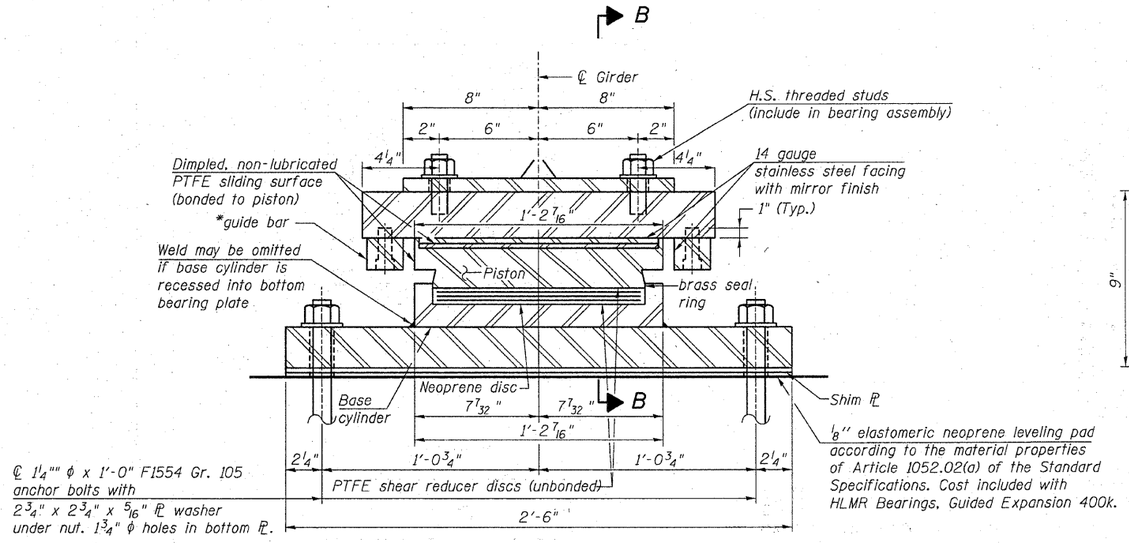

SECTION A-A

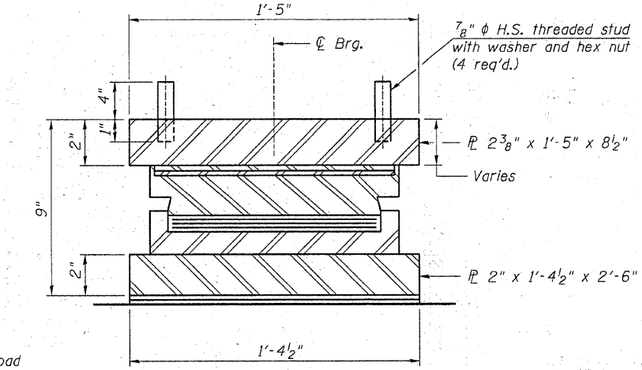

SECTION B-B

(Guide Bar omitted for clarity)

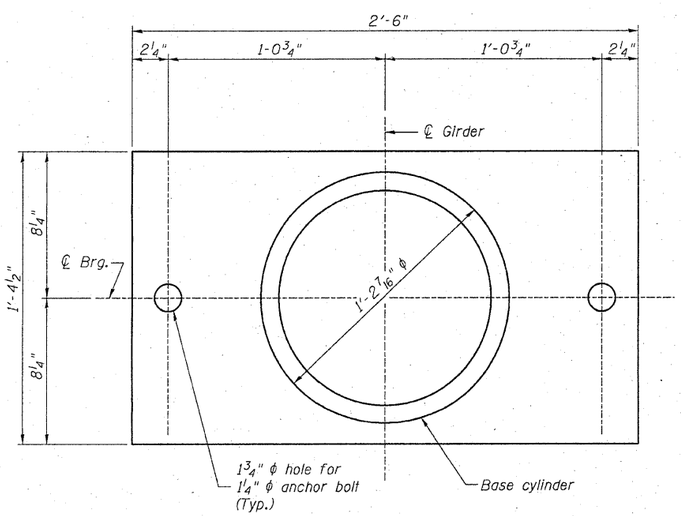

BOTTOM BEARING PL AND BASE CYLINDER PLAN

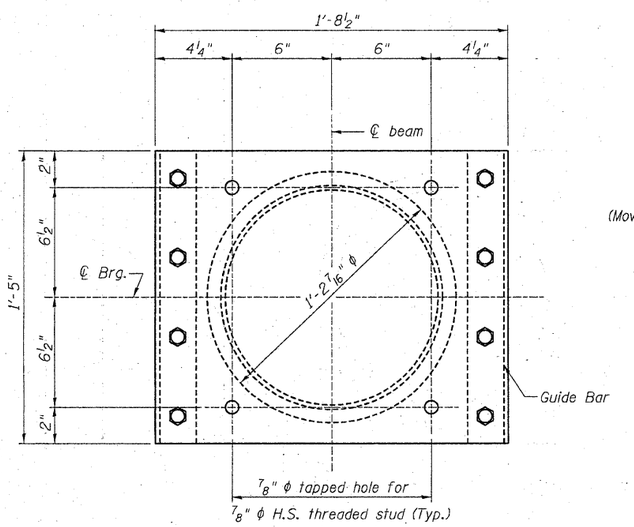

TOP BEARING PL AND PISTON PLAN

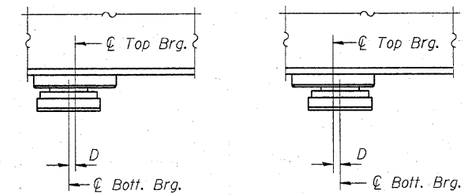

BELOW 50° F. (Move bott. brg. away from fixed brg.)

ABOVE 50° F. (Move bott. brg. toward fixed brg.)

SETTING ANCHOR BOLTS AT EXP. BRG.

D=⅛" per each 100' of expansion for every 15° temp. change from the normal temp. of 50° F.

* As alternates to the bolted connection shown, the guide bars may be connected to the top bearing plate by groove welds or the guide bars and top bearing plate may be fabricated as a single piece.

Bearing Data	
Vertical Design Load	400 K
Total Required Movement	1⅛"
Service Design Rotation	0.014 rad.

BILL OF MATERIAL

Item	Unit	Total
HLMR Bearings, Guided Expansion 400k	Each	7
Anchor Bolts, 1¼"	Each	14

NOTES

The plates of the Bearing Assembly shall be AASHTO M270, Grade 50.
The Bearing Assembly shall be capable of transmitting 20% of the vertical design load as a horizontal force in the direction normal to the guide bars.
Shim plate(s) shall be the full dimension of the bottom bearing plate.
Cost of shims is included with HLMR Bearings, Guided Expansion 400k.

BEARING DETAILS
STRUCTURE NUMBER 101-3100

PROFESSIONAL DESIGN FIRM LICENSE #184-001084

© Copyright Hanson Professional Services Inc. 2010

HANSON
Hanson Professional Services Inc.

JOB NO. 03R1807
DATE 11/08/10
SHEET NO. 24
47 SHEETS

F.A.U. RTE.	SECTION	COUNTY	TOTAL SHEETS	SHEET NO.
5103	03-00337-00-BR	Winnebago	66	39

CONTRACT NO. 85523
ILLINOIS FED. AID PROJECT

LAYOUT	JKR/SMK	09/23/10
DRAWN	MEM	10/25/10
REVIEWED	JKR/SMK	10/26/10

11/23/2010
I:\03 Jobs\03R807\Struct\Sheet\S-024-Bear Det2.dgn

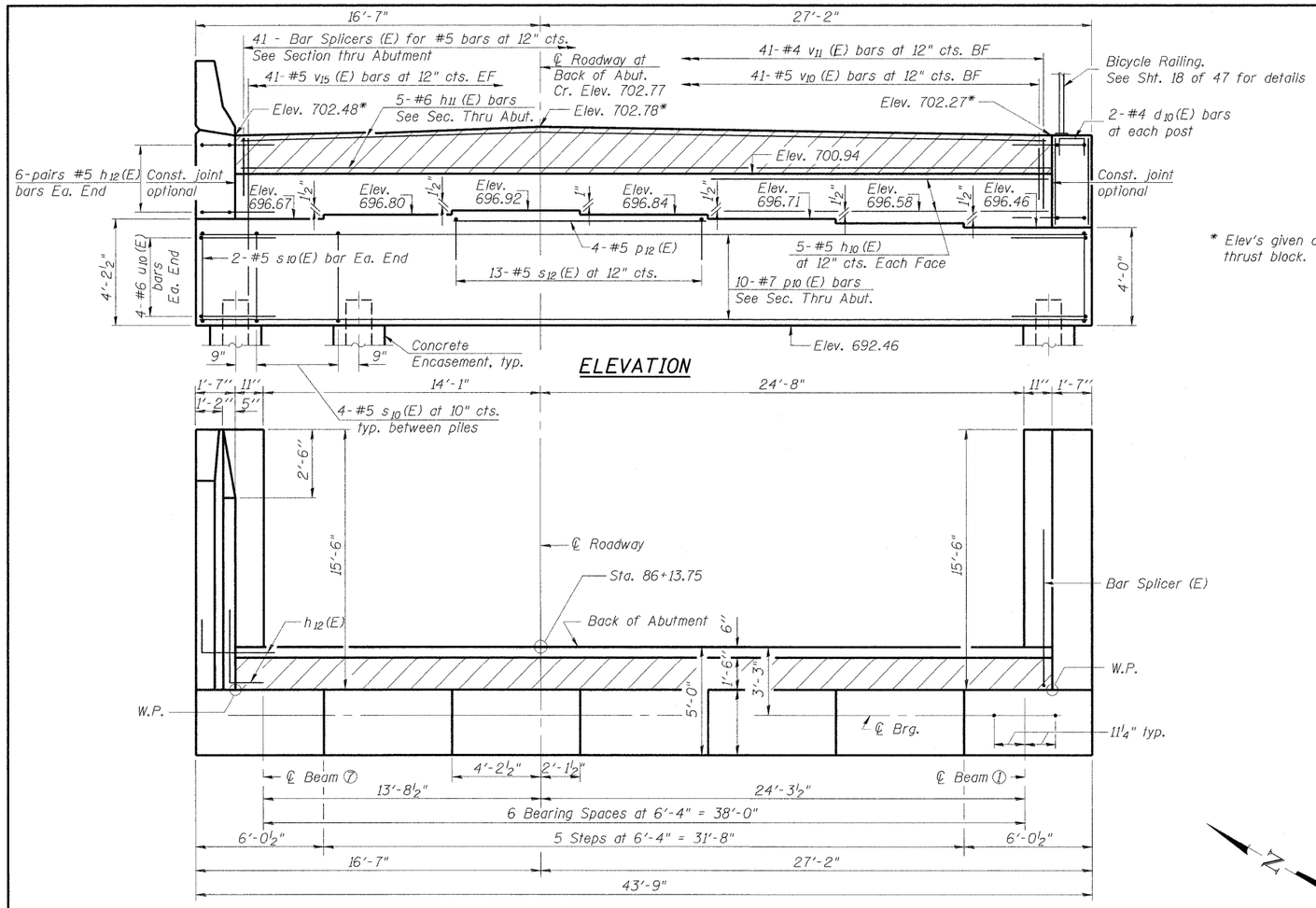

ELEVATION

* Elev's given at back of thrust block.

TOP VIEW

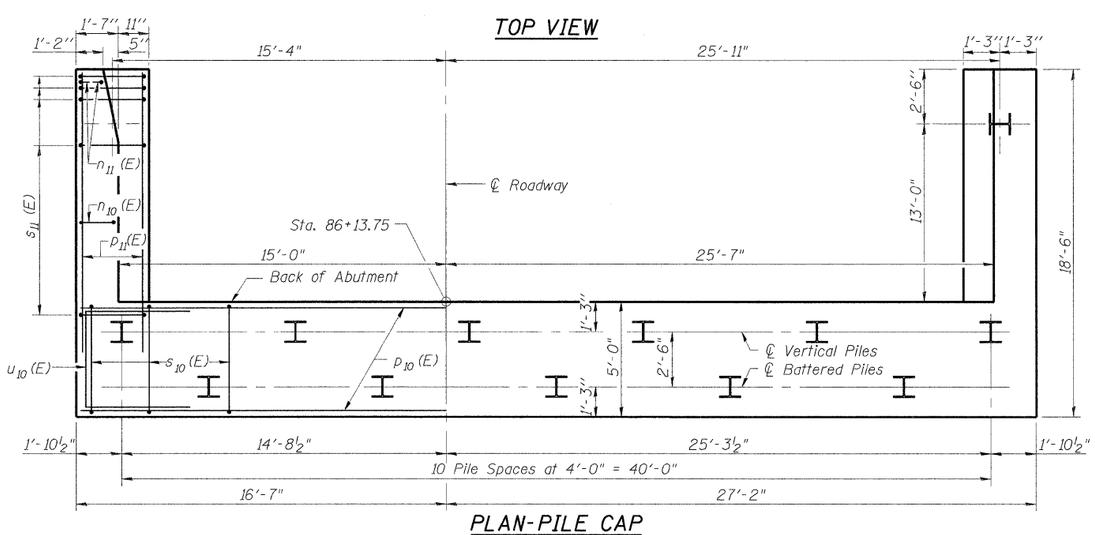

PLAN-PILE CAP

PILE DATA

Type: HP14x73
Nominal Required Bearing: 578k
Factored Resistance Available: 193k
Est. Length: 55'
No. Production Piles: 12
No. Test Piles: 1

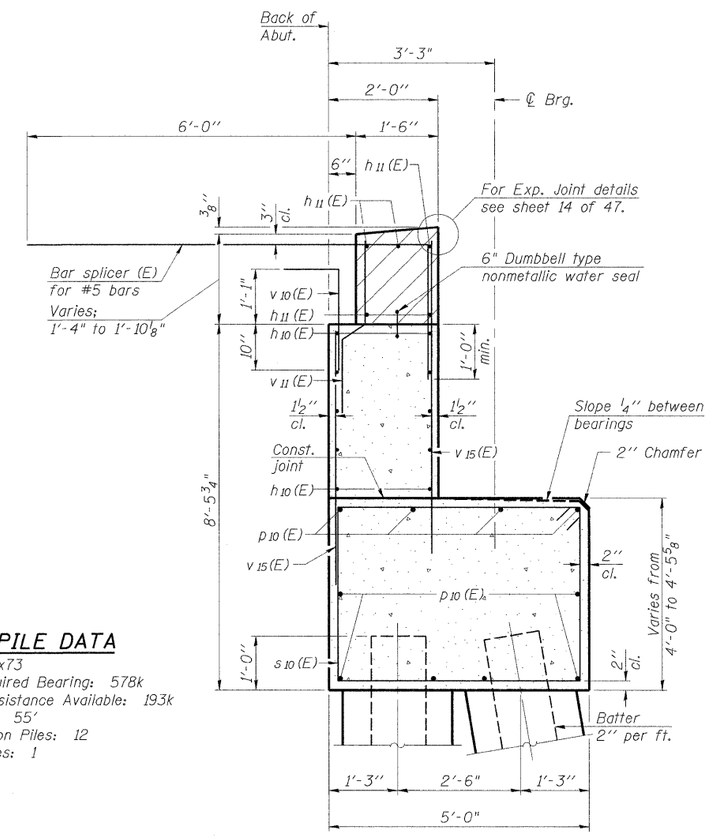

SEC. THRU ABUT.

Notes:
Hatched area to be poured after superstructure falsework has been removed. Quantity of concrete included with Concrete Superstructure.
Space reinforcement in cap to miss anchor bolts.
Pour steps monolithically with cap.

PROFESSIONAL DESIGN FIRM LICENSE #184-001084

© Copyright Hanson Professional Services Inc. 2010

HANSON
Hanson Professional Services Inc.

JOB NO. 03R1807
DATE 10/26/10
SHEET NO. 25
47 SHEETS

EAST ABUTMENT
STRUCTURE NUMBER 101-3100

F.A.U. RTE.	SECTION	COUNTY	TOTAL SHEETS	SHEET NO.
5103	03-00337-00-BR	Winnebago	66	40
		CONTRACT NO. 85523		
		ILLINOIS FED. AID PROJECT		

LAYOUT	JRV/SMA	08/23/10
DRAWN	MGM	10/25/10
REVIEWED	JRV/SMA	10/26/10

10-26-2010
H:\03Jobs\03R1807\Struct\Sheet\S-0025-E-Abut.dgn

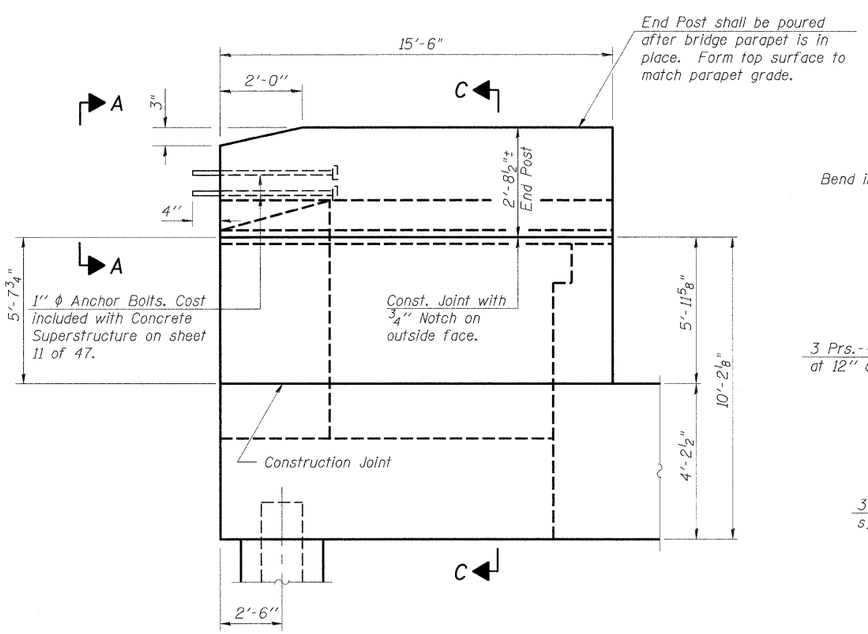

NORTH WING WALL ELEVATION
Showing Dimensions

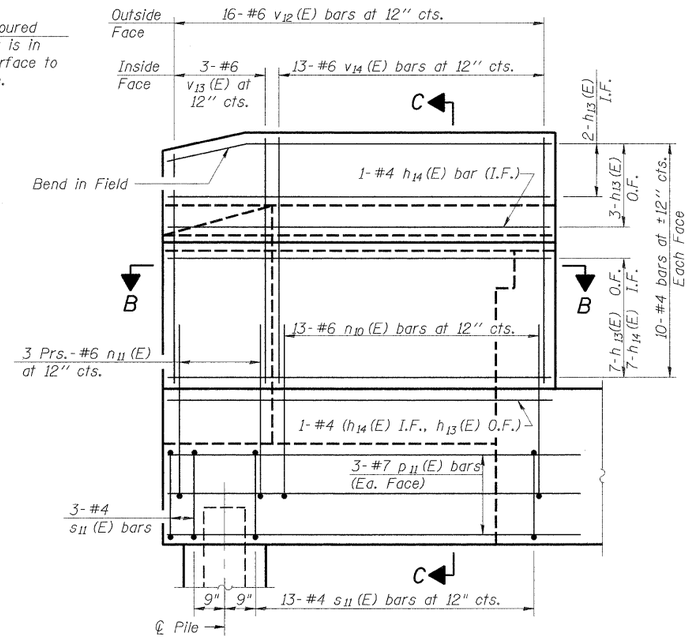

NORTH WING WALL ELEVATION
Showing Reinforcement

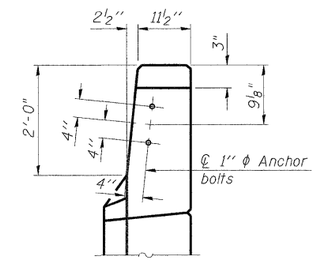

VIEW A-A

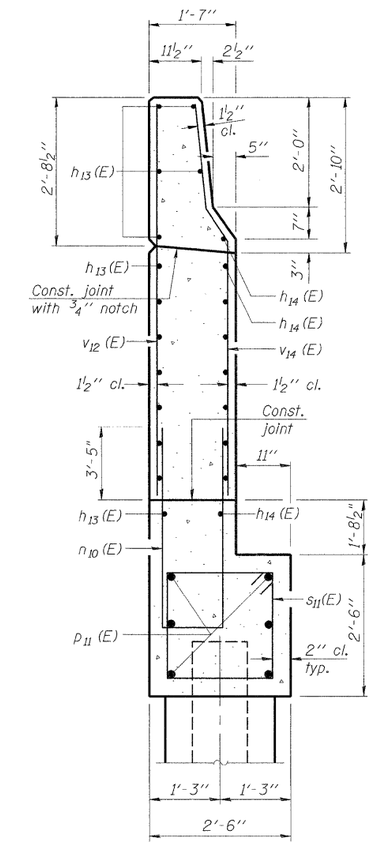

SECTION C-C

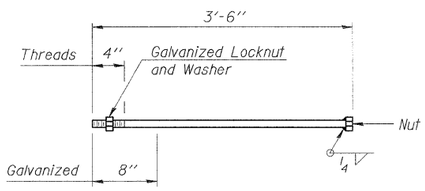

1" ϕ ANCHOR BOLT

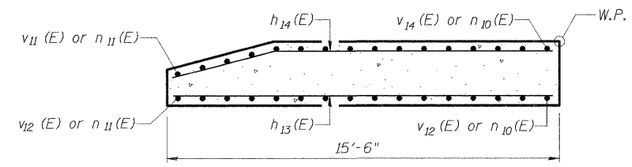

SECTION B-B

Notes:
Hatched area to be poured after superstructure false work has been removed. Quantity of concrete included with Concrete Superstructure.
Space reinforcement in cap to miss anchor bolts.
Pour steps monolithically with cap.
Quantity of concrete in end post included with Concrete Superstructure on sheet 11 of 47.
For Concrete Encasement details, see sheet 34 of 47.

EAST ABUTMENT
STRUCTURE NUMBER 101-3100

PROFESSIONAL DESIGN FIRM LICENSE #184-001084

© Copyright Hanson Professional Services Inc. 2010

HANSON
Hanson Professional Services Inc.

JOB NO.	SHEET NO. 26	F.A.U. RTE.	SECTION	COUNTY	TOTAL SHEETS	SHEET NO.
03R1807	47 SHEETS	5103	03-00337-00-BR	Winnebago	66	41
DATE 10/26/10				CONTRACT NO. 85523		
				ILLINOIS FED. AID PROJECT		

LAYOUT	JKR/SMK	08/23/10
DRAWN	MGM	10/25/10
REVIEWED	JKR/SMK	10/26/10

ID:GB-3200
I:\03166\03R1807\Struct\Sheet-S-0201-E-Abut-Hdgn

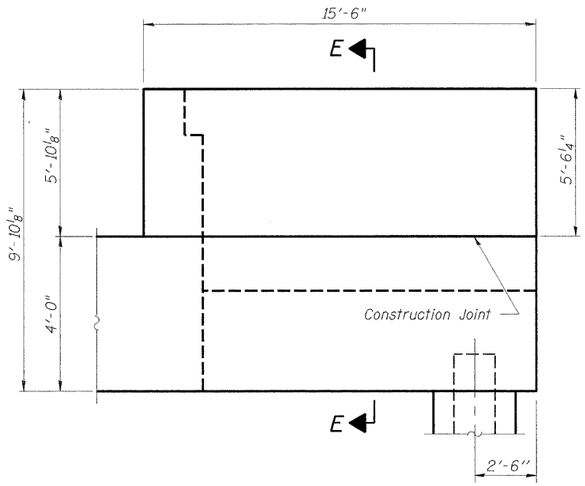

SOUTH WING WALL ELEVATION
Showing Dimensions

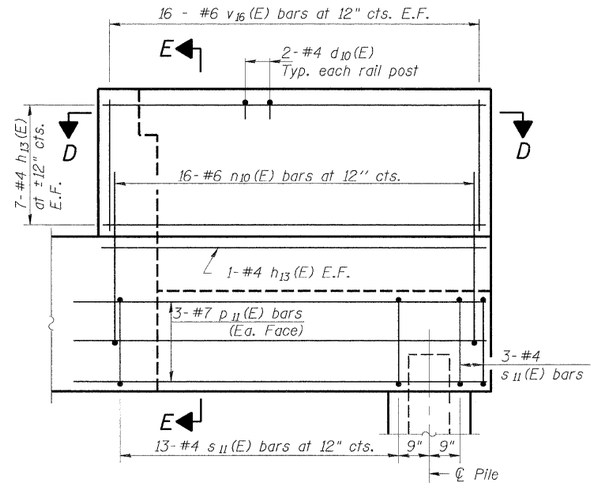

SOUTH WING WALL ELEVATION
Showing Reinforcement

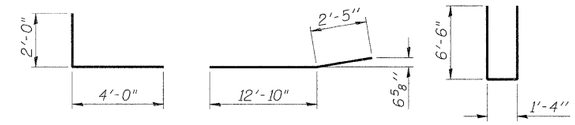

BAR h12 (E) BAR h14 (E) BAR n10 (E)

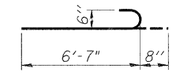

BAR n11 (E)

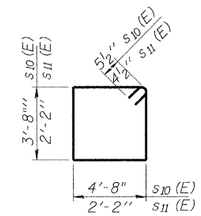

BARS s10 (E) & s11 (E)

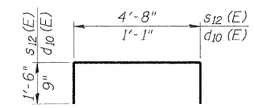

BAR s12 (E) & d10 (E)

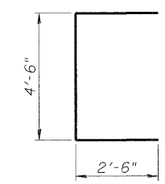

BAR u10 (E)

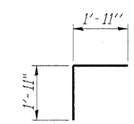

BAR v10 (E)

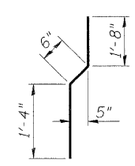

BAR v11 (E)

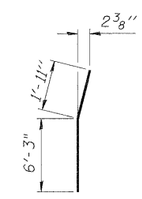

BAR v13 (E)

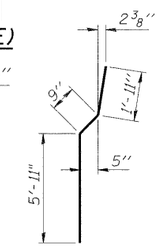

BAR v14 (E)

EAST ABUTMENT
BILL OF MATERIAL

Bar	No.	Size	Length	Shape
d10 (E)	6	#4	2'-7"	
h10 (E)	10	#5	40'-3"	
h11 (E)	5	#6	40'-3"	
h12 (E)	24	#5	6'-0"	
h13 (E)	29	#4	15'-3"	
h14 (E)	9	#4	15'-3"	
n10 (E)	29	#6	14'-4"	
n11 (E)	6	#6	7'-3"	
p10 (E)	10	#7	43'-5"	
p11 (E)	12	#7	16'-0"	
p12 (E)	4	#5	12'-4"	
s10 (E)	44	#5	17'-7"	
s11 (E)	32	#4	9'-5"	
s12 (E)	13	#5	7'-8"	
u10 (E)	8	#6	9'-6"	
v10 (E)	41	#5	3'-10"	
v11 (E)	41	#4	3'-6"	
v12 (E)	16	#6	8'-3"	
v13 (E)	3	#6	8'-2"	
v14 (E)	13	#6	8'-7"	
v15 (E)	82	#5	7'-2"	
v16 (E)	32	#6	5'-5"	
Structure Excavation		Cu. Yd.	165	
Concrete Structures		Cu. Yd.	66.2	
Reinforcement Bars, Epoxy Coated		Pound	6050	
Furnishing - Piles, HP14x73		Foot	660	
Driving Piles		Foot	660	
Test Pile, HP 14x73		Each	1	
Concrete Encasement		Cu. Yd.	7.1	
Concrete Sealer		Sq. Ft.	507	
Pile Shoes		Each	12	

For details of Bar Splicers, see sheet 33 of 47.
For details of piles and Concrete Encasement, see sheet 34 of 47.

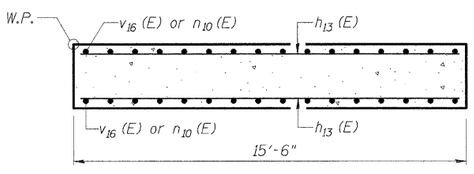

SECTION B_B

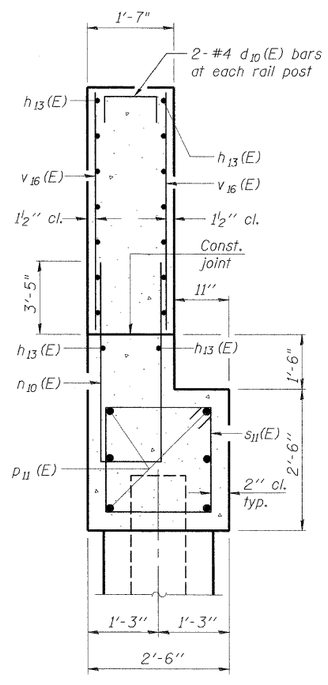

SECTION E-E

Notes:
Hatched area to be poured after superstructure false work has been removed. Quantity of concrete included with Concrete Superstructure.
Space reinforcement in cap to miss anchor bolts.
Pour steps monolithically with cap.
Quantity of concrete in end post included with Concrete Superstructure on sheet 11 of 47.

EAST ABUTMENT
STRUCTURE NUMBER 101-3100

PROFESSIONAL DESIGN FIRM LICENSE #184-001084

© Copyright Hanson Professional Services Inc. 2010

HANSON
Hanson Professional Services Inc.

JOB NO. 03R1807
DATE 10/26/10
SHEET NO. 27
47 SHEETS

F.A.U. RTE.	SECTION	COUNTY	TOTAL SHEETS	SHEET NO.
5103	03-00337-00-BR	Winnebago	66	42
		CONTRACT NO. 85523		
		ILLINOIS FED. AID PROJECT		

LAYOUT	JKR/SMK	08/23/10
DRAWN	MGM	10/25/10
REVIEWED	JKR/SMK	10/26/10

10-26-2010
H:\03Jobs\03R1807\Struct\Sheet\S-027-E-Abut-Subm

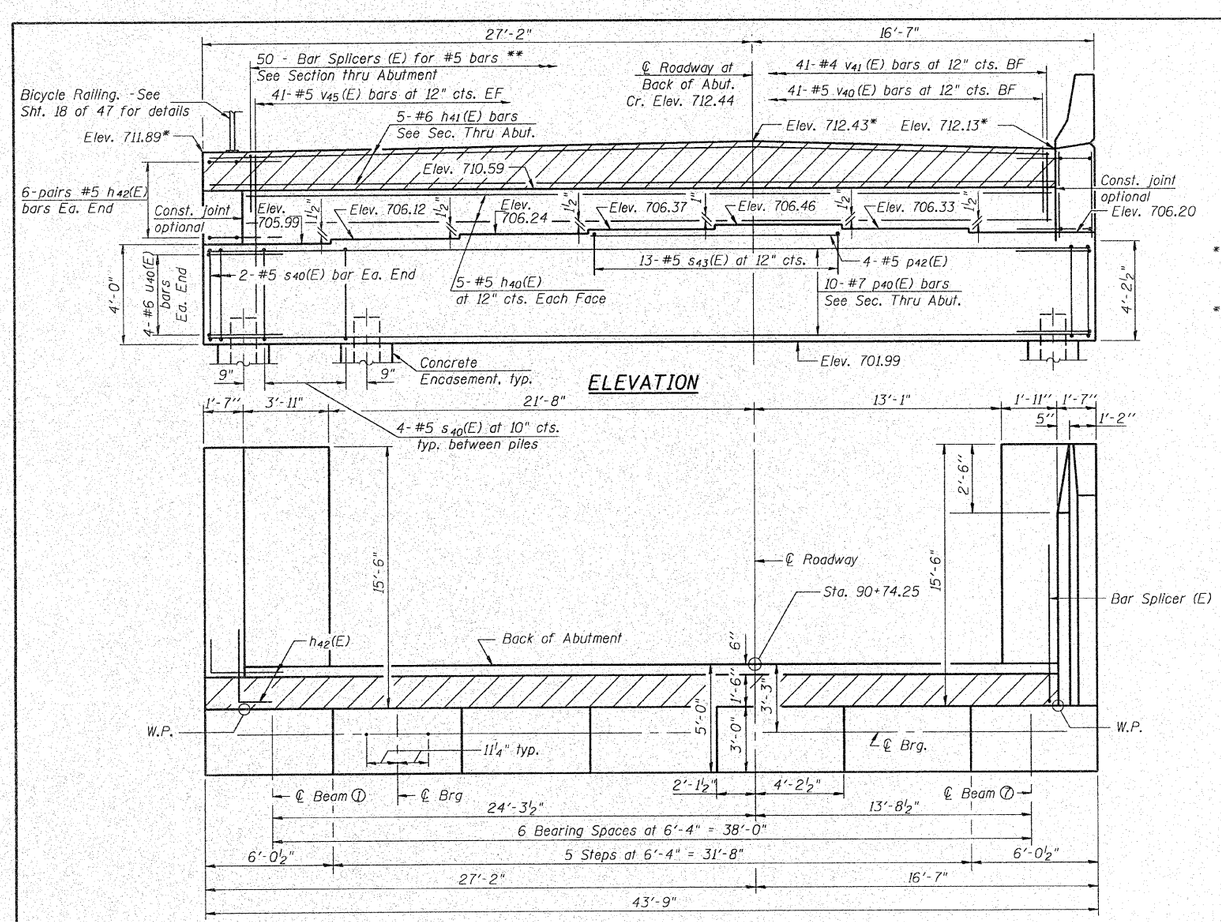

* Elev's given at back of thrust block.

** See Sheet 15 of 47 for layout of Bar Splicers

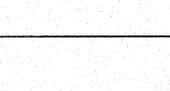

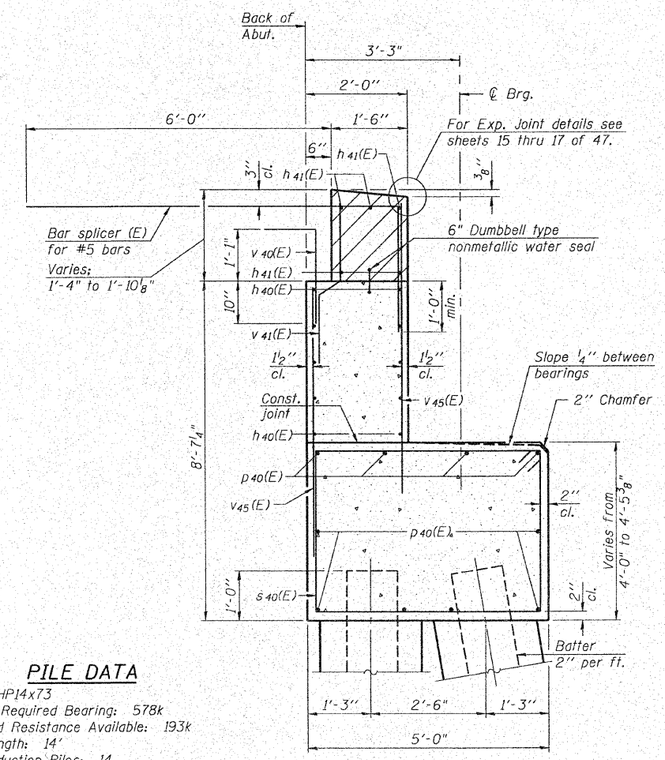

PILE DATA

Type: HP14x73
Nominal Required Bearing: 578k
Factored Resistance Available: 193k
Est. Length: 14'
No. Production Piles: 14
No. Test Piles: 1

SEC. THRU ABUT.

Notes:
Hatched area to be poured after superstructure falsework has been removed. Quantity of concrete included with Concrete Superstructure.
Space reinforcement in cap to miss anchor bolts.
Pour steps monolithically with cap.

WEST ABUTMENT
STRUCTURE NUMBER 101-3100

PROFESSIONAL DESIGN FIRM LICENSE #184-001084

© Copyright Hanson Professional Services Inc. 2010

HANSON
Hanson Professional Services Inc.

JOB NO.	SHEET NO.	F.A.U. RTE.	SECTION	COUNTY	TOTAL SHEETS	SHEET NO.
03R1807	SHEET NO. 28	5103	03-00337-00-BR	Winnebago	66	43
DATE 11/08/10	47 SHEETS			CONTRACT NO. 85523		
			ILLINOIS FED. AID PROJECT			

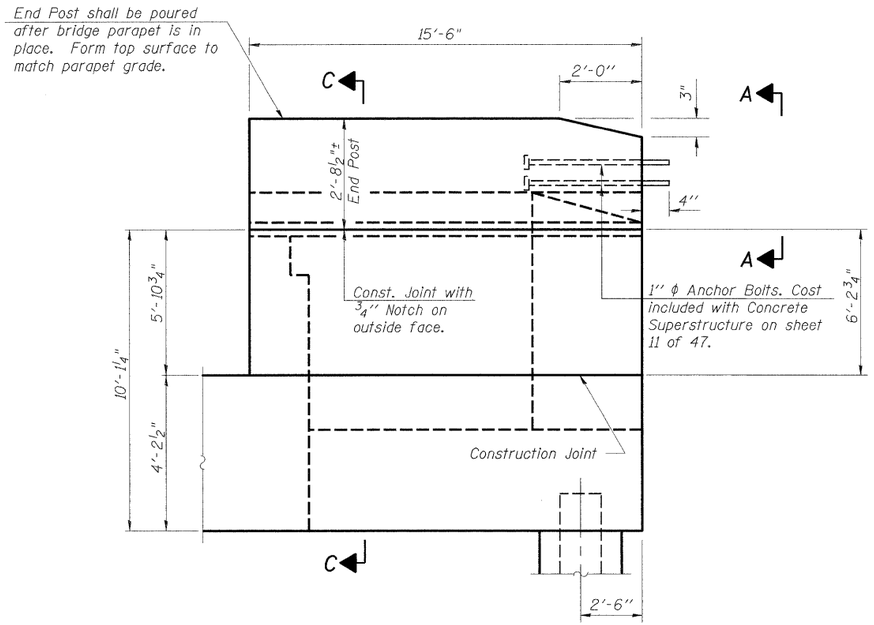

NORTH WING WALL ELEVATION
Showing Dimensions

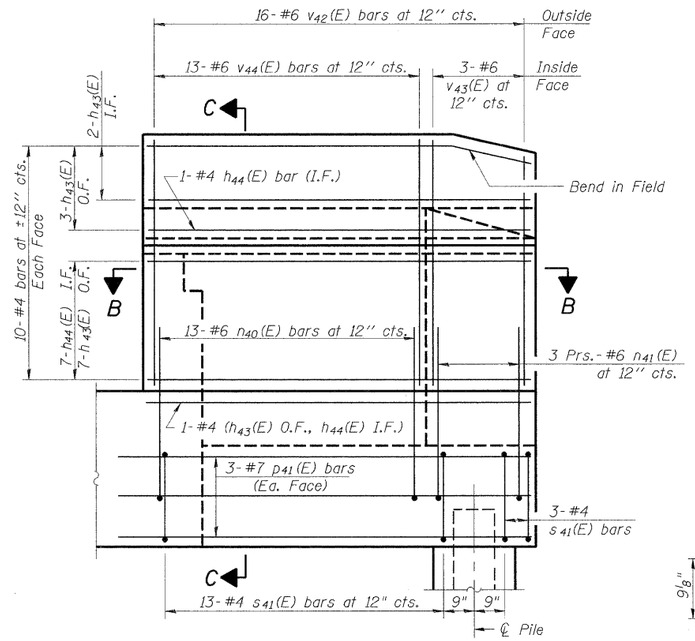

NORTH WING WALL ELEVATION
Showing Reinforcement

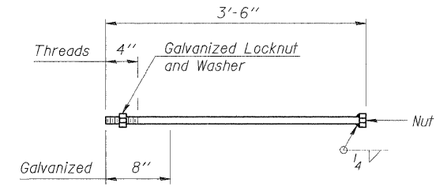

1" ϕ ANCHOR BOLT

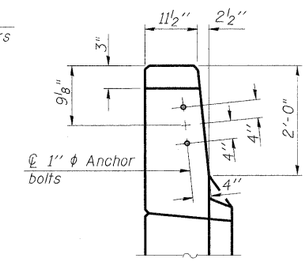

VIEW A-A

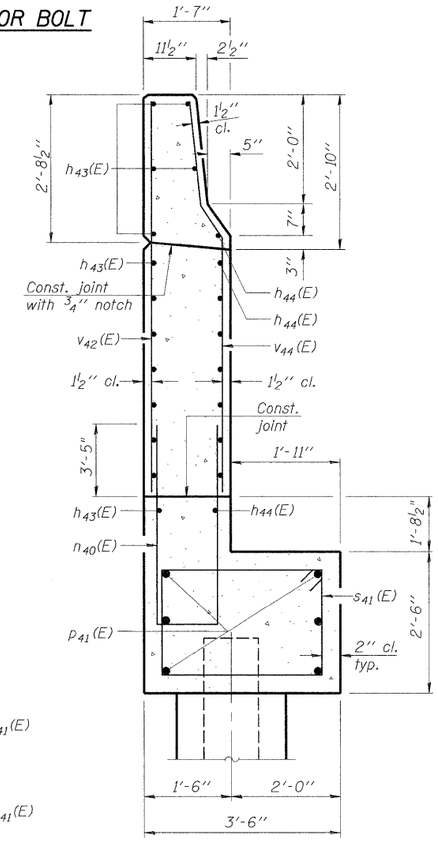

SECTION C-C

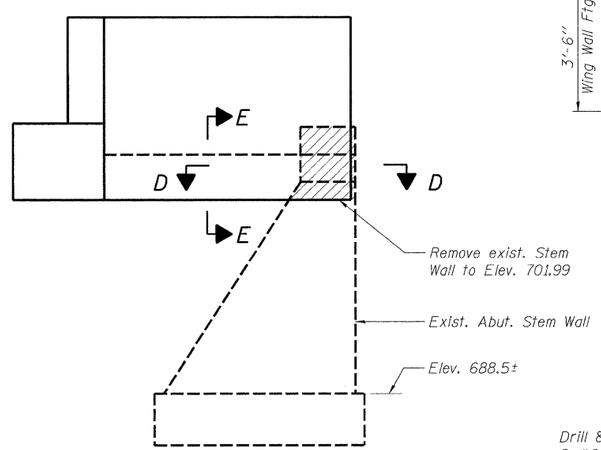

ELEVATION - NW WING WALL

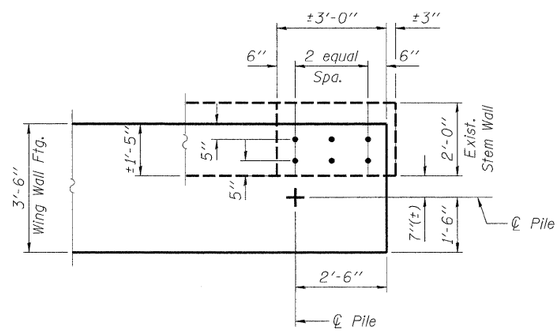

VIEW D-D

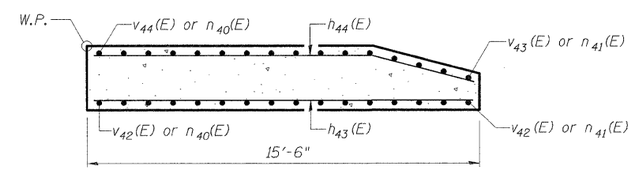

SECTION B-B

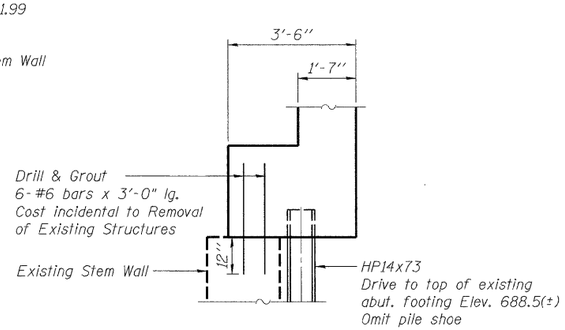

VIEW E-E

Notes:
Quantity of concrete in end post included with Concrete Superstructure on sheet 11 of 47.
For Concrete Encasement details, see sheet 34 of 47.

WEST ABUTMENT
STRUCTURE NUMBER 101-3100

PROFESSIONAL DESIGN FIRM LICENSE #184-001084

© Copyright Hanson Professional Services Inc. 2010

HANSON
Hanson Professional Services Inc.

JOB NO.	SHEET NO. 29	F.A.U. RTE.	SECTION	COUNTY	TOTAL SHEETS	SHEET NO.
03R1807		5103	03-00337-00-BR	Winnebago	66	44
DATE 10/26/10	47 SHEETS			CONTRACT NO. 85523		
			ILLINOIS FED. AID PROJECT			

LAYOUT	JKR/SMK	08/23/10
DRAWN	MGM	10/25/10
REVIEWED	JKR/SMK	10/26/10

JOB: 0300
HOS:\Job\03R1807\Struct\Sheet\S-0029W-Abut-Wsign

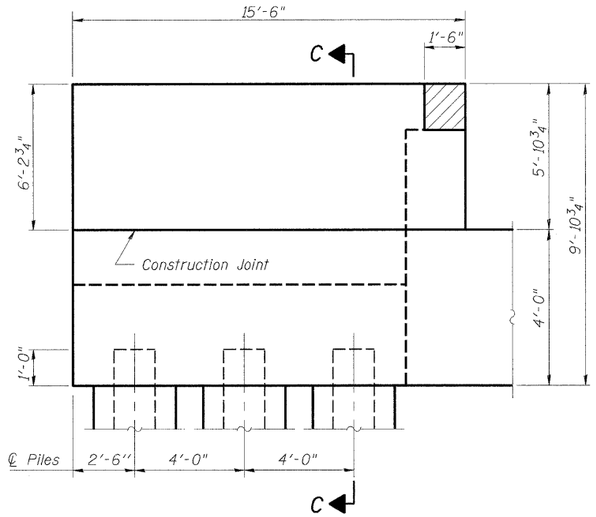

SOUTH WING WALL ELEVATION
Showing Dimensions

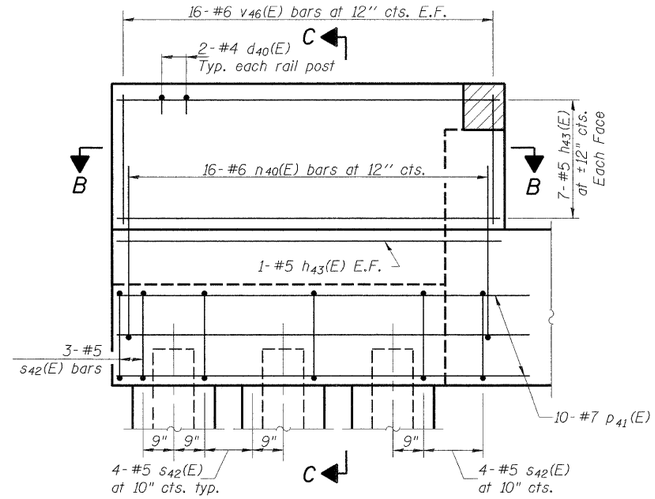

SOUTH WING WALL ELEVATION
Showing Reinforcement

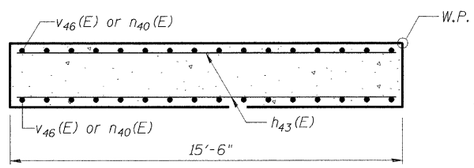

SECTION B-B

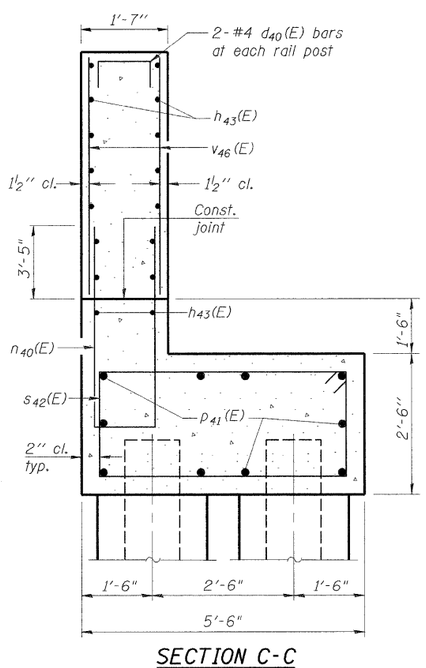

SECTION C-C

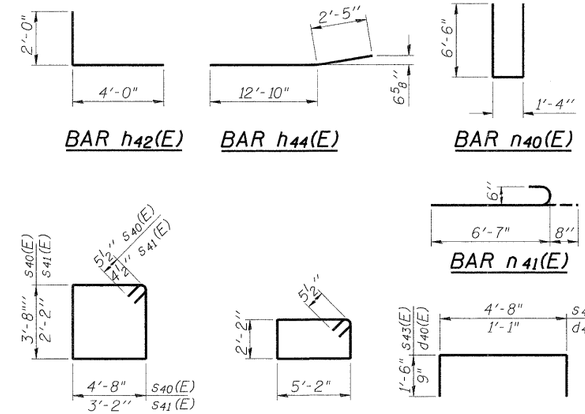

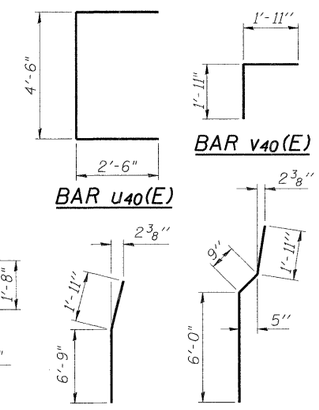

WEST ABUTMENT BILL OF MATERIAL

Bar	No.	Size	Length	Shape
d40(E)	6	#4	2'-7"	
h40(E)	10	#5	40'-3"	
h41(E)	5	#6	41'-10"	
h42(E)	24	#5	6'-0"	
h43(E)	29	#4	15'-3"	
h44(E)	9	#4	15'-3"	
n40(E)	29	#6	14'-4"	
n41(E)	6	#6	7'-3"	
p40(E)	10	#7	43'-5"	
p41(E)	16	#7	16'-0"	
p42(E)	4	#5	12'-4"	
s40(E)	44	#5	17'-7"	
s41(E)	16	#4	11'-5"	
s42(E)	15	#5	15'-7"	
s43(E)	13	#5	7'-8"	
u40(E)	8	#6	9'-6"	
v40(E)	41	#5	3'-10"	
v41(E)	41	#4	3'-6"	
v42(E)	16	#6	8'-5"	
v43(E)	3	#6	8'-8"	
v44(E)	13	#6	8'-8"	
v45(E)	82	#5	7'-2"	
v46(E)	32	#6	5'-9"	
Structure Excavation		Cu. Yd.	165	
Concrete Structures		Cu. Yd.	72.0	
Reinforcement Bars, Epoxy Coated		Pound	6370	
Furnishing - Piles, HP14x73		Foot	196	
Driving Piles		Foot	196	
Test Pile, HP 14x73		Each	1	
Concrete Encasement		Cu. Yd.	8.2	
Concrete Sealer		Sq. Ft.	510	
Pile Shoes		Each	13*	

For details of Bar Splicers, see sheet 33 of 47.
For details of piles and Concrete Encasement, see sheet 34 of 47.
* Omit pile shoe on N.W. Wingwall pile.

Notes:
Quantity of concrete in end post included with Concrete Superstructure on sheet 11 of 47.

WEST ABUTMENT
STRUCTURE NUMBER 101-3100

PROFESSIONAL DESIGN FIRM LICENSE #184-001084

© Copyright Hanson Professional Services Inc. 2010

HANSON
Hanson Professional Services Inc.

JOB NO. 03R1807
DATE 10/26/10
SHEET NO. 30
47 SHEETS

F.A.U. RTE.	SECTION	COUNTY	TOTAL SHEETS	SHEET NO.
5103	03-00337-00-BR	Winnebago	66	45

CONTRACT NO. 85523
ILLINOIS FED. AID PROJECT

LAYOUT	JKR/SMK	08/23/10
DRAWN	MGM	10/25/10
REVIEWED	JKR/SMK	10/26/10

ID:DB-200
I:\03Jobs\03R1807\Struct\Sheet S-030-W-Abut-S.dgn

Notes:
Space reinforcement in cap to miss anchor bolts.
Pour steps monolithically with cap.
For details of piles, see sheet 34 of 47.

PILE DATA

Type: HP14x73
Nominal Required Bearing: 578K
Allowable Resistance Available: 193K
Est. Length: 44'
No. Production Piles: 20
No. Test Piles: 1

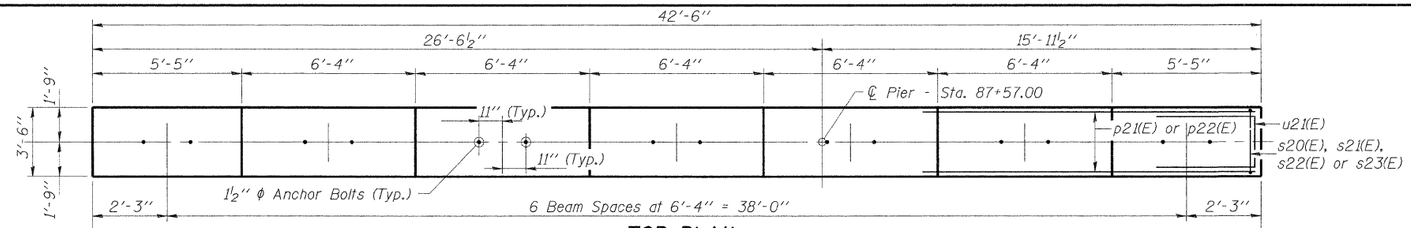

TOP PLAN

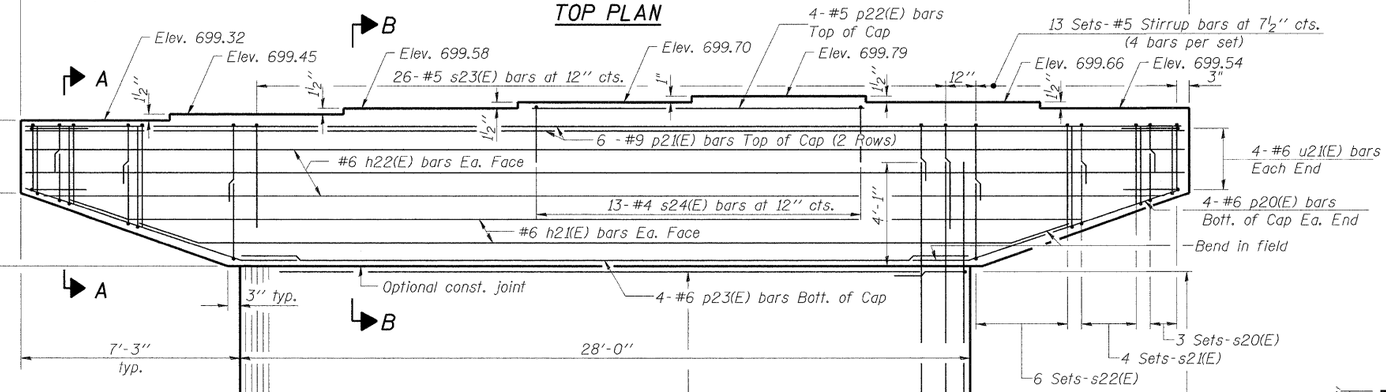

ELEVATION
(Looking West)

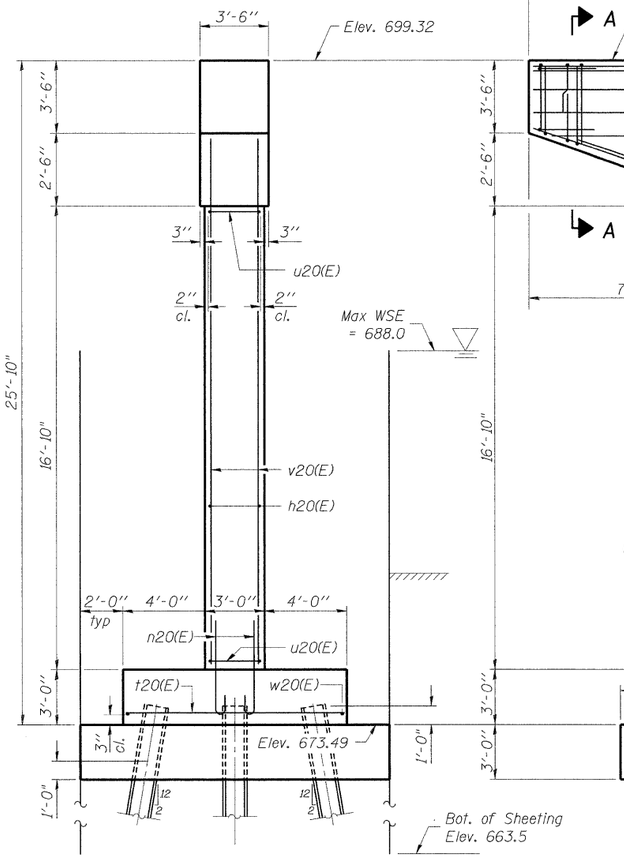

END VIEW
(Looking North)

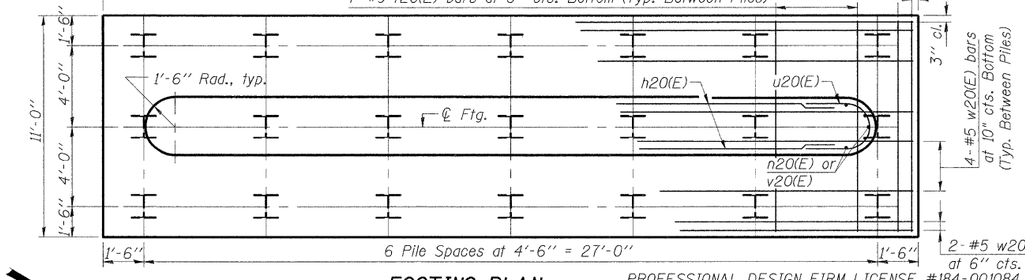

FOOTING PLAN

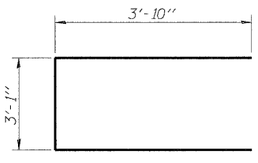

BAR u21(E)

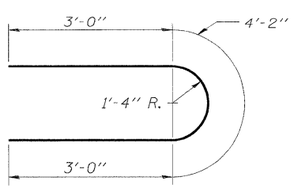

BAR u20(E)

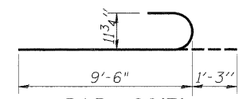

BAR n20(E)

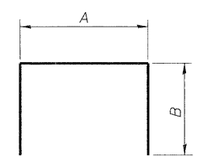

BARS

PIER BILL OF MATERIAL

Bar	No.	Size	Length	Shape
h20(E)	34	#5	24'-6"	
h21(E)	4	#6	36'-6"	
h22(E)	6	#6	42'-2"	
n20(E)	108	#9	10'-9"	
p20(E)	8	#6	10'-10"	
p21(E)	12	#9	42'-2"	
p22(E)	4	#5	12'-4"	
p23(E)	4	#6	28'-0"	
s20(E)	24	#5	8'-4"	
s21(E)	32	#5	9'-4"	
s22(E)	48	#5	10'-4"	
s23(E)	26	#5	13'-2"	
s24(E)	13	#4	6'-2"	
t20(E)	46	#9	10'-6"	
u20(E)	34	#5	10'-2"	
u21(E)	8	#6	10'-9"	
v20(E)	108	#9	20'-10"	
w20(E)	12	#5	29'-6"	
Cofferdam Excavation			Cu. Yd.	207.8
Concrete Structures			Cu. Yd.	120.1
Reinforcement Bars, Epoxy Coated			Pound	19,100
Furnishing - Piles, HP14x73			Foot	880
Driving Piles			Foot	880
Test Pile, HP14x73			Each	1
Seal Coat Concrete			Cu. Yd.	56.7
Pile Shoes			Each	20

A & B DIMENSIONS

Bar	A	B
s20(E)	2'-0"	3'-2"
s21(E)	2'-0"	3'-8"
s22(E)	2'-0"	4'-2"
s23(E)	3'-2"	5'-0"
s24(E)	3'-2"	1'-6"

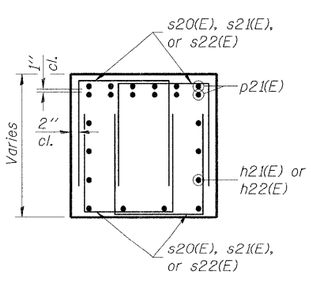

SECTION A-A

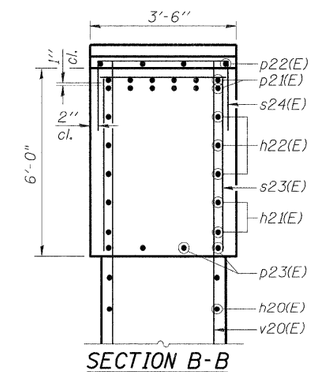

SECTION B-B

PIER #1 - EAST
STRUCTURE NUMBER 101-3100

PROFESSIONAL DESIGN FIRM LICENSE #184-001084

© Copyright Hanson Professional Services Inc. 2010

HANSON
Hanson Professional Services Inc.

JOB NO.	SHEET NO.	F.A.U. RTE.	SECTION	COUNTY	TOTAL SHEETS	SHEET NO.
03R1807	31	5103	03-00337-00-BR	Winnebago	66	46
DATE 10/26/10	47 SHEETS			CONTRACT NO. 85523		
			ILLINOIS FED. AID PROJECT			

LAYOUT	JKR/SMK	08/23/10
DRAWN	MGM	10/25/10
REVIEWED	JKR/SMK	10/26/10

ID:05.2010
I:\03_Jobs\03R1807\Struct\Sheet\S-033-E Pier01.dgn

Notes:
Space reinforcement in cap to miss anchor bolts.
Pour steps monolithically with cap.
For details of piles, see sheet 34 of 47.

PILE DATA

Type: HP14x73
Nominal Required Bearing: 578K
Allowable Resistance Available: 193K
Est. Length: 20'
No. Production Piles: 20
No. Test Piles: 1

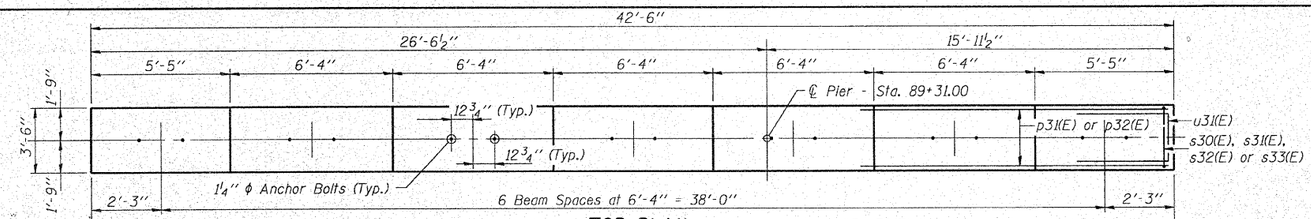

TOP PLAN

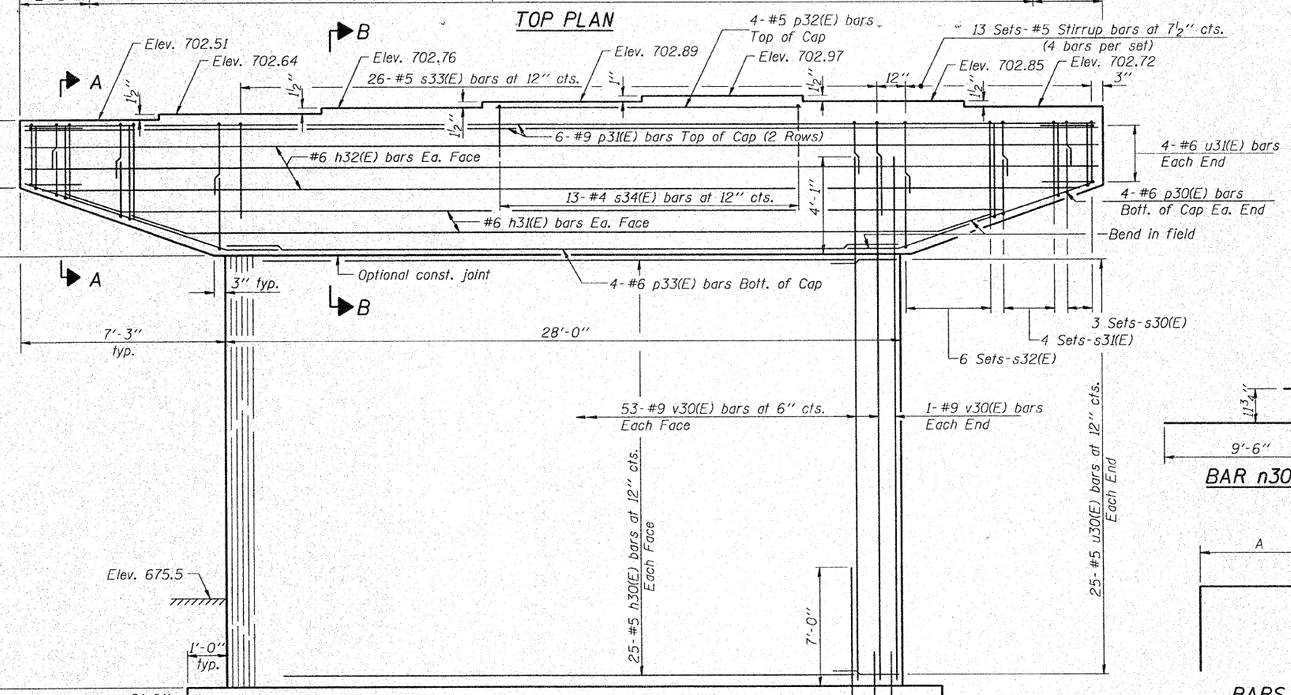

ELEVATION
(Looking West)

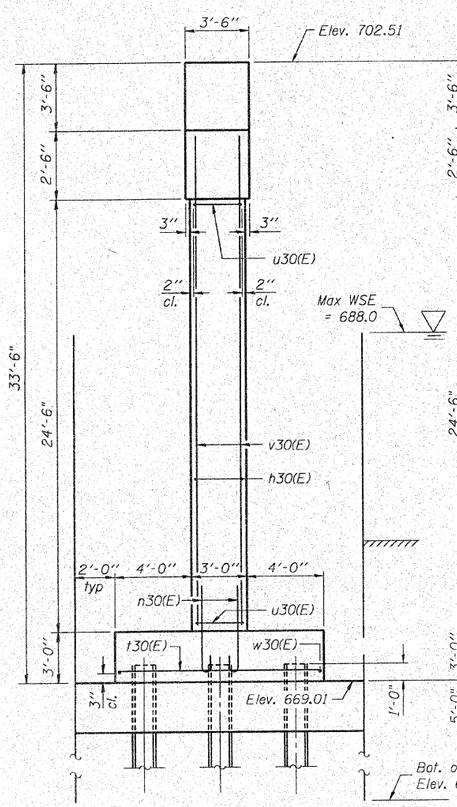

END VIEW
(Looking North)

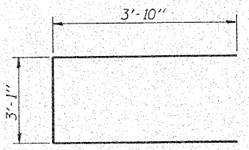

BAR u31(E)

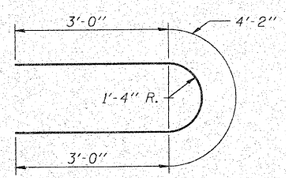

BAR u30(E)

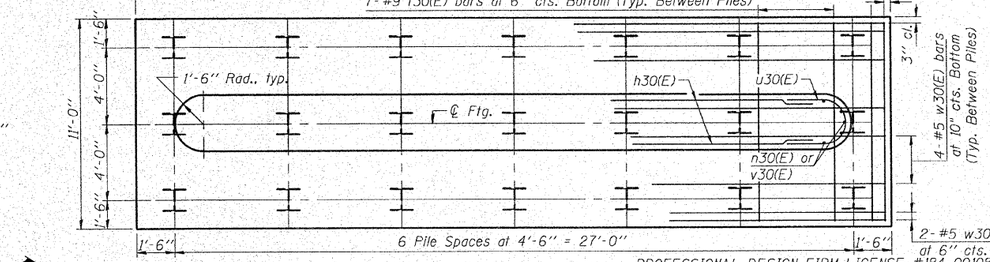

FOOTING PLAN

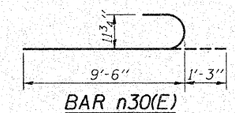

BAR n30(E)

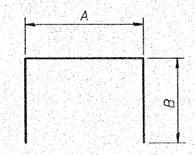

BARS

PIER BILL OF MATERIAL

Bar	No.	Size	Length	Shape
h30(E)	50	#5	24'-6"	—
h31(E)	4	#6	38'-6"	—
h32(E)	6	#6	42'-2"	—
n30(E)	108	#9	10'-9"	⊃
p30(E)	8	#6	10'-10"	—
p31(E)	12	#9	42'-2"	—
p32(E)	4	#5	12'-4"	—
p33(E)	4	#6	28'-0"	—
s30(E)	24	#5	8'-4"	⊓
s31(E)	32	#5	9'-4"	⊓
s32(E)	48	#5	10'-4"	⊓
s33(E)	26	#5	13'-2"	⊓
s34(E)	13	#4	6'-2"	⊓
t30(E)	46	#9	10'-6"	—
u30(E)	50	#5	10'-2"	⊃
u31(E)	8	#6	10'-9"	⊃
v30(E)	108	#9	28'-6"	—
w30(E)	12	#5	29'-6"	—
Cofferdam Excavation		Cu. Yd.	217.2	
Cofferdam Location 2		Each	1	
Concrete Structures		Cu. Yd.	143.4	
Reinforcement Bars, Epoxy Coated		Pound	22,490	
Furnishing - Piles, HP14x73		Foot	400	
Driving Piles		Foot	400	
Test Pile, HP14x73		Each	1	
Seal Coat Concrete		Cu. Yd.	94.4	
Pile Shoes		Each	20	

A & B DIMENSIONS

Bar	A	B
s30(E)	2'-0"	3'-2"
s31(E)	2'-0"	3'-8"
s32(E)	2'-0"	4'-2"
s33(E)	3'-2"	5'-0"
s34(E)	3'-2"	1'-6"

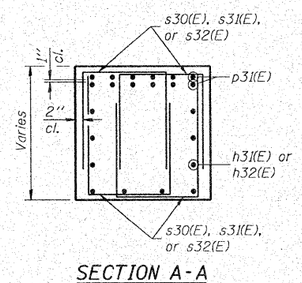

SECTION A-A

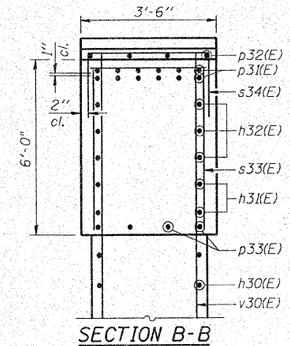

SECTION B-B

PIER #2 - WEST
STRUCTURE NUMBER 101-3100

PROFESSIONAL DESIGN FIRM LICENSE #184-001084

© Copyright Hanson Professional Services Inc. 2010

HANSON
Hanson Professional Services Inc.

JOB NO.		F.A.U. RTE.	SECTION	COUNTY	TOTAL SHEETS	SHEET NO.
03R1807	SHEET NO. 32	5103	03-00337-00-BR	Winnebago	66	47
DATE 11/08/10	47 SHEETS			CONTRACT NO. 85523		
			ILLINOIS	FED. AID PROJECT		

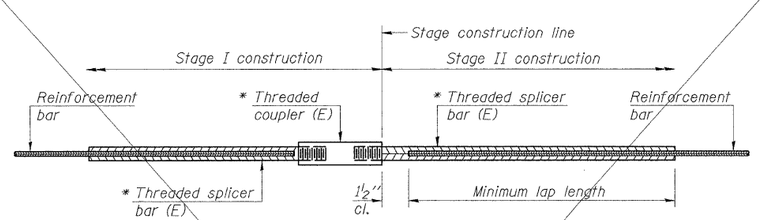

STANDARD BAR SPLICER ASSEMBLY

Minimum Lap Lengths					
Bar size to be spliced	Table 1	Table 2	Table 3	Table 4	Table 5
3, 4	1'-5"	1'-11"	2'-1"	2'-4"	2'-3"
5	1'-9"	2'-5"	2'-7"	2'-11"	2'-10"
6	2'-1"	2'-11"	3'-1"	3'-6"	3'-4"
7	2'-9"	3'-10"	4'-2"	4'-8"	4'-6"
8	3'-8"	5'-1"	5'-5"	6'-2"	5'-10"
9	4'-7"	6'-5"	6'-10"	7'-9"	7'-5"

Table 1: Black bar, 0.8 Class C
Table 2: Black bar, Top bar lap, 0.8 Class C
Table 3: Epoxy bar, 0.8 Class C
Table 4: Epoxy bar, Top bar lap, 0.8 Class C
Table 5: Epoxy bar, Top bar lap, Class B

Threaded splicer bar length = min. lap length + 1½" + thread length

* Epoxy not required on Bar Splicer Assembly components used in conjunction with black bars.

Location	Bar size	No. assemblies required	Table for minimum lap length

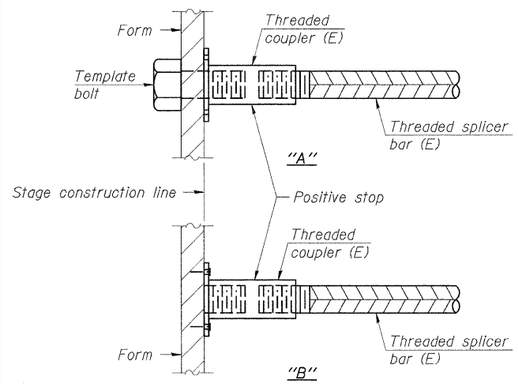

INSTALLATION AND SETTING METHODS

"A" : Set bar splicer assembly by means of a template bolt.
"B" : Set bar splicer assembly by nailing to wood forms or cementing to steel forms.
(E) : Indicates epoxy coating.

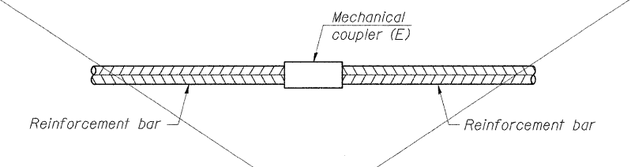

STANDARD MECHANICAL SPLICER

Location	Bar size	No. assemblies required

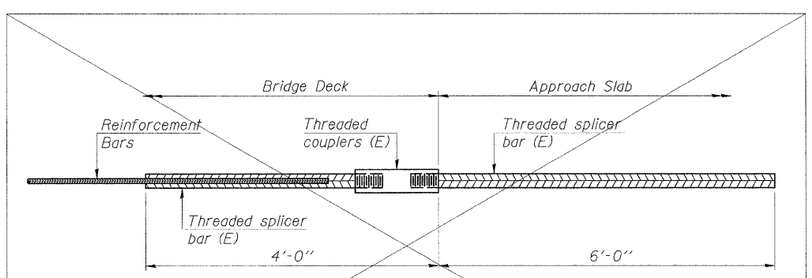

BAR SPLICER ASSEMBLY FOR #5 BAR ON INTEGRAL OR SEMI-INTEGRAL ABUTMENTS

No. required =

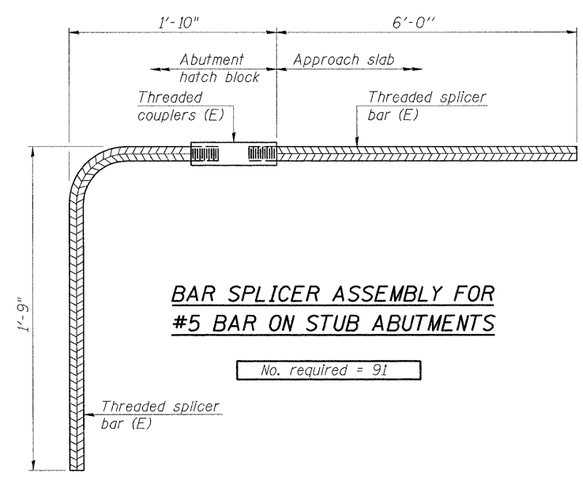

BAR SPLICER ASSEMBLY FOR #5 BAR ON STUB ABUTMENTS

No. required = 91

NOTES

Splicer bars shall be deformed with threaded ends and have a minimum 60 ksi yield strength.

All reinforcement shall be lapped and tied to the splicer bars.

Bar splicer assemblies shall be epoxy coated according to the requirements for reinforcement bars. See Section 508 of the Standard Specifications.

See special provision for Mechanical Splicers.

See approved list of bar splicer assemblies and mechanical splicers for alternatives.

BAR SPLICER ASSEMBLY AND MECHANICAL SPLICER DETAILS STRUCTURE NUMBER 101-3100

PROFESSIONAL DESIGN FIRM LICENSE #184-001084

© Copyright Hanson Professional Services Inc. 2010

HANSON
Hanson Professional Services Inc.

JOB NO.	SHEET NO. 33	F.A.U. RTE.	SECTION	COUNTY	TOTAL SHEETS	SHEET NO.
03R1807		5103	03-00337-00-BR	Winnebago	66	48
DATE 10/26/10	47 SHEETS			CONTRACT NO. 85523		
			ILLINOIS	FED. AID PROJECT		

LAYOUT	JKR/SMK	08/23/10
DRAWN	MCM	10/25/10
REVIEWED	JKR/SMK	10/26/10

10-26-2010
10-03\Job\03R1807\Struct\Sheet\S-0133-Splicer.dgn

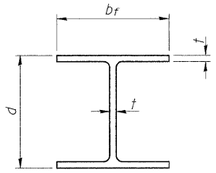

STEEL PILE TABLE

Designation	Depth d	Flange width b_f	Web and Flange thickness t	Encasement diameter A
HP 14x117	14 1/4"	14 7/8"	13/16"	30"
x102	14"	14 3/4"	11/16"	30"
x89	13 7/8"	14 3/4"	5/8"	30"
x73	13 5/8"	14 5/8"	1/2"	30"
HP 12x84	12 1/4"	12 1/4"	11/16"	24"
x74	12 1/8"	12 1/4"	5/8"	24"
x63	12"	12 1/8"	1/2"	24"
x53	11 3/4"	12"	7/16"	24"
HP 10x57	10"	10 1/4"	9/16"	24"
x42	9 3/4"	10 1/8"	7/16"	24"
HP 8x36	8"	8 1/8"	7/16"	18"

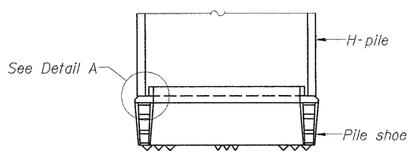

ELEVATION

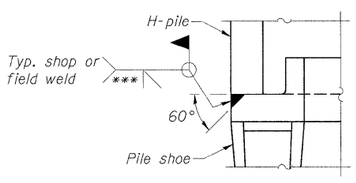

DETAIL A

H-PILE SHOE ATTACHMENT

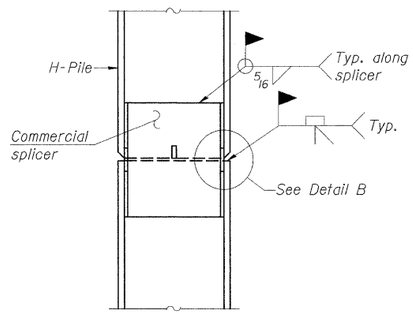

ELEVATION

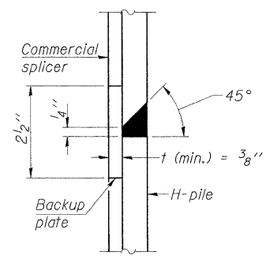

DETAIL "B"

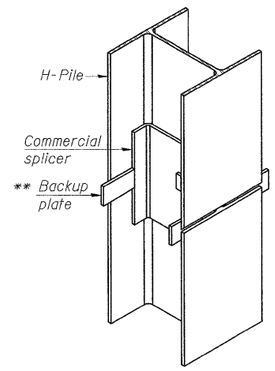

ISOMETRIC VIEW

WELDED COMMERCIAL SPLICE

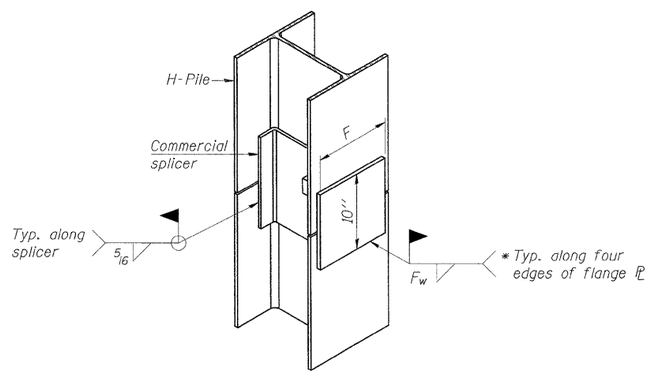

ISOMETRIC VIEW

WELDED COMMERCIAL SPLICE ALTERNATE

* Interrupt welds 1/4" from end of web and/or each flange.

** Remove portions of backup plates that extend outside the flanges.

*** Weld size per pile shoe manufacturer (5/16" min.).

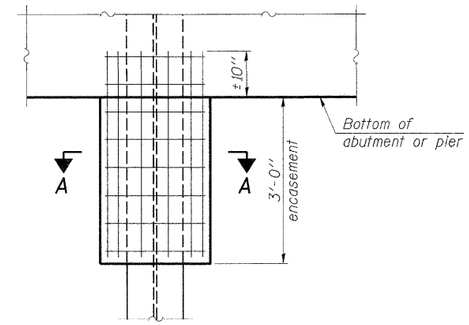

ELEVATION

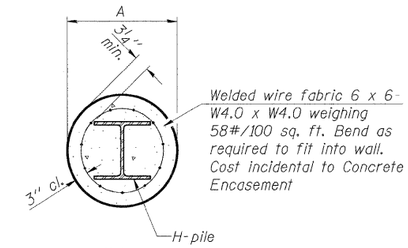

Note:
Forms for encasement may be omitted when soil conditions permit.

SECTION A-A

PILE ENCASEMENT

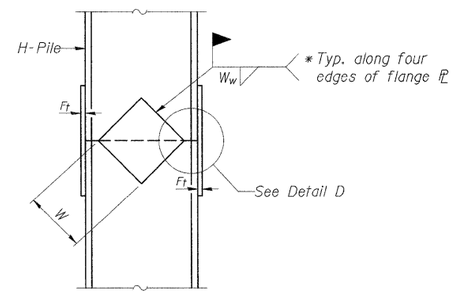

ELEVATION

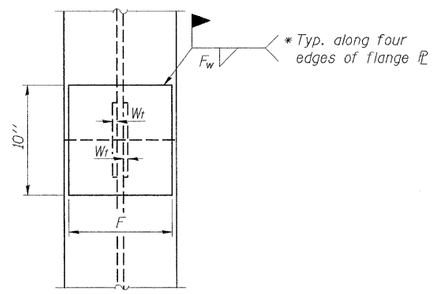

END VIEW

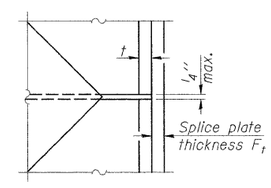

DETAIL D

Designation	F	F_t	F_w	W	W_t	W_w
HP 14x117	12 1/2"	1"	7/8"	7 3/4"	5/8"	1/2"
x102	12 1/2"	7/8"	3/4"	7 3/4"	5/8"	1/2"
x89	12 1/2"	3/4"	11/16"	7 3/4"	5/8"	1/2"
x73	12 1/2"	5/8"	9/16"	7 3/4"	5/8"	1/2"
HP 12x84	10"	7/8"	11/16"	6 1/2"	5/8"	1/2"
x74	10"	7/8"	11/16"	6 1/2"	5/8"	1/2"
x63	10"	5/8"	1/2"	6 1/2"	1/2"	3/8"
x53	10"	5/8"	1/2"	6 1/2"	1/2"	3/8"
HP 10x57	8"	3/4"	9/16"	5 1/4"	1/2"	3/8"
x42	8"	5/8"	9/16"	5 1/4"	1/2"	3/8"
HP 8x36	7"	5/8"	7/16"	4 1/4"	1/2"	3/8"

WELDED PLATE FIELD SPLICE

Note:
The steel H-piles shall be according to AASHTO M270 Grade 50.

PROFESSIONAL DESIGN FIRM LICENSE #184-001084

© Copyright Hanson Professional Services Inc. 2010

HANSON
Hanson Professional Services Inc.

JOB NO. 03R1807
DATE 10/26/10
SHEET NO. 34
47 SHEETS

F.A.U. RTE.	SECTION	COUNTY	TOTAL SHEETS	SHEET NO.
5103	03-00337-00-BR	Winnebago	66	49

CONTRACT NO. 85523
ILLINOIS FED. AID PROJECT

HP PILE DETAILS
STRUCTURE NUMBER 101-3100

LAYOUT	JKR/SMK	08/23/10
DRAWN	MDM	10/25/10
REVIEWED	JKR/SMK	10/26/10

10.26.2010
N:\03Jobs\03R1807\Structure\S-034-HP-Pile.dgn

PROJECT Kishwaukee Rd Bridge over Kishwaukee River, Winnebago County, Illinois
CLIENT Hanson Professional Services, Inc., 1525 S. Sixth St., Springfield, IL 62703
TSC

BORING B-1 DATE STARTED 3-30-04 DATE COMPLETED 3-30-04 JOB L-60,207

ELEVATIONS
GROUND SURFACE 712.9
END OF BORING

WATER TABLE
▽ WHILE DRILLING DRY
▽ AT END OF BORING DRY
▼ 24 HOURS

SAMPLE NO.	TYPE	N	WC	Qu	γDRY	DEPTH	ELEV.	SOIL DESCRIPTIONS
						0.7		8" BITUMINOUS Pavement
						1.3		8" AGGREGATE Base Coarse
1	SS	9-4-6						FILL - Brown silty CLAY, trace sand and gravel (CL)
2	SS	2-2-2						
3	SS	3-3-3				6.0	706.9	FILL - Brown silty CLAY, little sand and gravel (CL)
4	SS	4-4-4						
5	SS	2-3-4						
6	SS	1-3-3						
7	SS	3-3-3						
8	SS	3-3-4						
						22.0	690.9	Weathered LIMESTONE
9	SS	50/2"						
10	SS	50/2"						
								End of Boring at 31.0' - Auger Refusal

LENGTH RECOVERY

DISTANCE BELOW SURFACE IN FEET: 0, 5, 10, 15, 20, 25, 30, 35, 40

DRILL RIG NO. 242

Division lines between deposits represent approximate boundaries between soil types; in-situ, the transition may be gradual.

PROJECT Kishwaukee Rd Bridge over Kishwaukee River, Winnebago County, Illinois
CLIENT Hanson Professional Services, Inc., 1525 S. Sixth St., Springfield, IL 62703
TSC

BORING B-2 DATE STARTED 3-30-04 DATE COMPLETED 3-30-04 JOB L-60,207

ELEVATIONS
GROUND SURFACE 702.9
END OF BORING

WATER TABLE
▽ WHILE DRILLING 23'
▽ AT END OF BORING 25'
▼ 24 HOURS

SAMPLE NO.	TYPE	N	WC	Qu	γDRY	DEPTH	ELEV.	SOIL DESCRIPTIONS
								12" BITUMINOUS Pavement
1	SS	2-4-4				1.0		Brown fine SAND, little gravel (SP)
2	SS	2-4-3						
3	SS	1-2-2				6.0	696.9	Brown fine to coarse SAND, little gravel (SW)
4	SS	1-2-3				8.5	694.4	Black silty SAND (SM)
5	SS	2-3-3						
6	SS	1-2-2						
7	SS	1-2-2						
8	SS	1-3-4				17.5	685.4	Black silty CLAY, trace sand and organics (CL)
9	SS	2-3-4				23.0	679.9	▽ Gray-brown fine to coarse SAND, little gravel (SW) ▽
						26.0	676.9	Brown fine to coarse SAND, little gravel (SW)
10	SS	4-5-5						
11	SS	6-8-10				33.5	669.4	Brown fine to coarse SAND, some gravel (SW)
12	SS	10-12-12						

LENGTH RECOVERY

DISTANCE BELOW SURFACE IN FEET: 0, 5, 10, 15, 20, 25, 30, 35, 40

DRILL RIG NO. 242

Division lines between deposits represent approximate boundaries between soil types; in-situ, the transition may be gradual.

PROJECT Kishwaukee Rd Bridge over Kishwaukee River, Winnebago County, Illinois
CLIENT Hanson Professional Services, Inc., 1525 S. Sixth St., Springfield, IL 62703
TSC

BORING B-2 DATE STARTED 3-30-04 DATE COMPLETED 3-30-04 JOB L-60,207

ELEVATIONS
GROUND SURFACE 702.9
END OF BORING

WATER TABLE
▽ WHILE DRILLING 23'
▽ AT END OF BORING 25'
▼ 24 HOURS

SAMPLE NO.	TYPE	N	WC	Qu	γDRY	DEPTH	ELEV.	SOIL DESCRIPTIONS
								Brown fine to coarse SAND, some gravel (SW)
13	SS	6-7-10						
14	SS	9-10-14				48.5		Brown fine to coarse SAND (SW)
15	SS	7-12-16				53.5		Brown SAND and GRAVEL (SW/GW)
16	SS	20-18-20						
17	SS	20-20 50/5"						
18	SS	30-30-24						
								End of Boring at 70.0'

LENGTH RECOVERY

DISTANCE BELOW SURFACE IN FEET: 40, 45, 50, 55, 60, 65, 70, 75, 80

DRILL RIG NO. 242

Division lines between deposits represent approximate boundaries between soil types; in-situ, the transition may be gradual.

PROFESSIONAL DESIGN FIRM LICENSE #184-001084

© Copyright Hanson Professional Services Inc. 2010

HANSON
Hanson Professional Services Inc.

JOB NO. 03R1807
DATE 10/26/10

SHEET NO. 35
47 SHEETS

F.A.U. RTE.	SECTION	COUNTY	TOTAL SHEETS	SHEET NO.
5103	03-00337-00-BR	Winnebago	66	50
		CONTRACT NO. 85523		
		ILLINOIS FED. AID PROJECT		

BORING LOGS
STRUCTURE NUMBER 101-3100

LAYOUT	JKR/SMK	08/23/10
DRAWN	MGM	10/25/10
REVIEWED	JKR/SMK	10/26/10

10/29/2010
I:\03jobs\03R1807\Struct Sheet\S-035-Boring-Logs

LOG OF BOREHOLE NO. B-3

Project No. 03R1807 | Sheet 1 of 2

CLIENT | ARCHITECT/ENGINEER

SITE: Winnebago County, Illinois | PROJECT: Kishwaukee Road Bridge

Surface Elev.: 681.6 ft

Description	Elev.	Depth (ft)	BLOWS/6in N-VALUE RQD	NUMBER	TYPE	RECOVERED (in) LTH SMPLD (in)	MOISTURE, %	DRY DENSITY (lb/ft³)	Qu (tsf) FAILURE TYPE	ADDITIONAL DATA/ REMARKS
Black silt, little clay. River sediment.	679.6 (2.0)									
Dark brown fine sand, wet.	675.6 (6.0)	2.5	1-1 1 N=2	SS-1	SS	18/18 100%	24			
Brown fine to coarse sand, little fine-medium gravel saturated.		5.0	0-1 1 N=2	SS-2	SS	18/18 100%	21			
		7.5	4-3 3 N=6	SS-3	SS	18/18 100%	15			
		10.0	3-4 5 N=9	SS-4	SS	18/18 100%	14			
		12.5	3-4 7 N=11	SS-5	SS	18/18 100%	7			
		15.0	6-8 9 N=17	SS-6	SS	18/18 100%	11			
		17.5	5-6 6 N=12	SS-7	SS	18/18 100%	9			
		20.0	8-9 8 N=17	SS-8	SS	18/18 100%	13			
Brown fine to coarse sand & fine gravel.	657.6 (24.0)	22.5								
Brown fine to coarse sand & fine to medium gravel, little fractured limestone.	654.6 (27.0)	25.0	26-18 9 N=27	SS-9	SS	18/18 100%	16			
		27.5								
		30.0	5-6 8	SS-10	SS	18/18 100%	11			

Continued Next Page

WATER LEVEL OBSERVATIONS

HANSON
Hanson Professional Services Inc.
Springfield, Illinois

STARTED	FINISHED
DRILL CO.	DRILL RIG
DRILLER	ASS'T DRILLER
LOGGED BY	APPROVED

LOG OF BOREHOLE NO. B-3

Project No. 03R1807 | Sheet 2 of 2

CLIENT | ARCHITECT/ENGINEER

SITE: Winnebago County, Illinois | PROJECT: Kishwaukee Road Bridge

(continued)

Description	Elev.	Depth (ft)	BLOWS/6in N-VALUE RQD	NUMBER	TYPE	RECOVERED (in) LTH SMPLD (in)	MOISTURE, %	DRY DENSITY (lb/ft³)	Qu (tsf) FAILURE TYPE	ADDITIONAL DATA/ REMARKS
Brown fine to coarse sand & fine to medium gravel, little fractured limestone. *(continued)*			N=14							
		32.5								
		35.0	11-36 32 N=68	SS-11	SS	18/18 100%	10			
		37.5								
		40.0	12-14 16 N=30	SS-12	SS	18/18 100%	8			
		42.5								
		45.0	8-10 10 N=20	SS-13	SS	18/18 100%	11			
		47.5								
		50.0	10-18 50/1"	SS-14	SS	13/13 100%				
End of Boring on Boulder.	629.6 (52.0)	52.5								
		55.0								

WATER LEVEL OBSERVATIONS

HANSON
Hanson Professional Services Inc.
Springfield, Illinois

STARTED	FINISHED
DRILL CO.	DRILL RIG
DRILLER	ASS'T DRILLER
LOGGED BY	APPROVED

PROFESSIONAL DESIGN FIRM LICENSE #184-001084

© Copyright Hanson Professional Services Inc. 2010

HANSON
Hanson Professional Services Inc.

JOB NO. 03R1807
DATE 10/26/10

SHEET NO. 36
47 SHEETS

F.A.U. RTE.	SECTION	COUNTY	TOTAL SHEETS	SHEET NO.
5103	03-00337-00-BR	Winnebago	66	51
		CONTRACT NO. 85523		
		ILLINOIS FED. AID PROJECT		

BORING LOGS
STRUCTURE NUMBER 101-3100

LAYOUT	JKR/SMK	08/23/10
DRAWN	MGM	10/25/10
REVIEWED	JKR/SMK	10/26/10

10:29:2010
I:\03Jobs\03R1807\Struct\Steel-S-036-Boring_2.dgn

LOG OF BOREHOLE NO. B-4

Project No. 03R1807 | Sheet 1 of 2

CLIENT | ARCHITECT/ENGINEER

SITE: Winnebago County, Illinois | PROJECT: Kishwaukee Road Bridge

Surface Elev.: 674.3 ft

Elev.	Description	Depth (ft)	Blows/6in N VALUE RQD	Number	Type	Recovered (in) LTH SMPLD (in)	Moisture, %	Dry Density (lb/ft³)	Qu (tsf) Failure Type	Additional Data/ Remarks
	Wet - Brownish medium to coarse sand & gravel.	2.5	2-2 3 N=5	SS-1	SS	18/18 100%				
		5.0	3-4 4 N=8	SS-2	SS	18/18 100%	7			
667.8	Start broken limestone mixed with with sand & gravel.	7.5	10-30 25 N=55	SS-3	SS	18/18 100%				
		10.0	35-47 22 N=69	SS-4	SS	18/18 100%	18			
663.3	More sand & gravel, less broken rock - still mix of two or possible large stone instead of rock.	12.5	14-50 55 N=105	SS-5	SS	18/18 100%	8			
		15.0	57-65 68 N=133	SS-6	SS	18/18 100%				
		17.5	48-33 36 N=69	SS-7	SS	18/18 100%	10			
655.8	Brownish, grayish silty fine sand with broken rock mix.	20.0	68-92	SS-8	SS	12/12 100%	16			
		25.0	13-14 15 N=29	SS-9	SS	18/18 100%				
645.8	Broken rock & silt or fine sand. Did another ss @ 29' - All broken limestone	30.0	125/3"	SS-10	SS	3/3 100%	12			
644.8										

Continued Next Page

WATER LEVEL OBSERVATIONS

HANSON
Hanson Professional Services Inc.
Springfield, Illinois

STARTED	FINISHED
DRILL CO.	DRILL RIG
DRILLER	ASST DRILLER
LOGGED BY	APPROVED

LOG OF BOREHOLE NO. B-4

Project No. 03R1807 | Sheet 2 of 2

CLIENT | ARCHITECT/ENGINEER

SITE: Winnebago County, Illinois | PROJECT: Kishwaukee Road Bridge

(continued) 29.5 644.8

Elev.	Description	Depth (ft)	Blows/6in N VALUE RQD	Number	Type	Recovered (in) LTH SMPLD (in)	Moisture, %	Dry Density (lb/ft³)	Qu (tsf) Failure Type	Additional Data/ Remarks
	Apparent top of bedrock.									

WATER LEVEL OBSERVATIONS

HANSON
Hanson Professional Services Inc.
Springfield, Illinois

STARTED	FINISHED
DRILL CO.	DRILL RIG
DRILLER	ASST DRILLER
LOGGED BY	APPROVED

PROFESSIONAL DESIGN FIRM LICENSE #184-001084

© Copyright Hanson Professional Services Inc. 2010

HANSON
Hanson Professional Services Inc.

JOB NO. 03R1807 | DATE 10/26/10 | SHEET NO. 37 | 47 SHEETS

BORING LOGS
STRUCTURE NUMBER 101-3100

F.A.U. RTE.	SECTION	COUNTY	TOTAL SHEETS	SHEET NO.
5103	03-00337-00-BR	Winnebago	66	52

CONTRACT NO. 85523

ILLINOIS FED. AID PROJECT

LAYOUT	JKR/SMK	08/23/10
DRAWN	MGM	10/25/10
REVIEWED	JKR/SMK	10/26/10

07/29/2010
I:\03Jobs\03R\R07\Struct\Sheet\S-037-Bor1og_3.dgn

FAS 9.88	75B 75F	Winnebago	14	2

SHEET NO.
SHEETS

B.M. in top of Concrete Parapet of W. Abutment of the existing bridge- U.S.55 mark El. 76.71.
Existing Bridge two Steel truss Spans 113'9" & 182'6"- 4" Wood Floor- Superstructure.
Stone Masonry Pier & abutments to be removed- See Special Provisions and Sheet 7 of the plans.

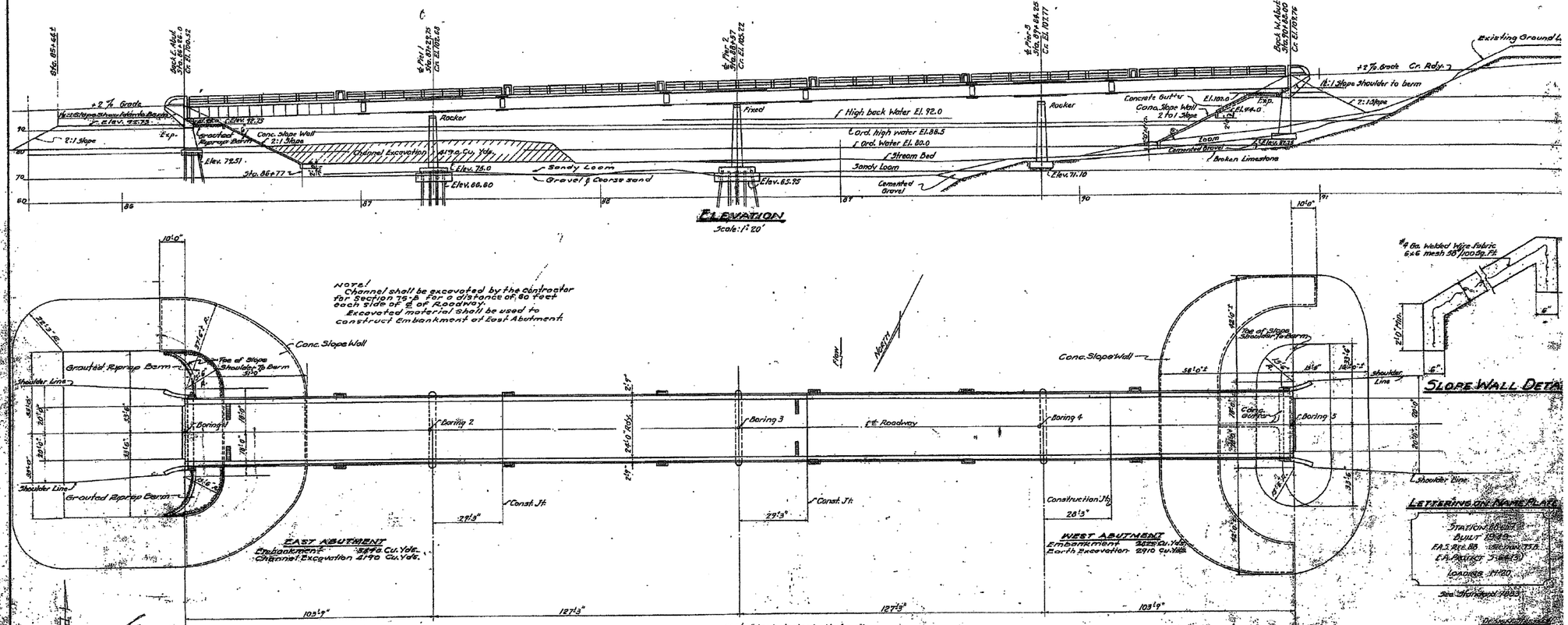

Item	Unit	Super.	Sub.	Totals Sec. 75B	Totals Sec. 75F
Class "X" Concrete	Cu.Yds.	362.5	129.5	362.5	
Class "A" Concrete	Cu.Yds.		869.4	869.4	
Structural Steel	Lbs.	676,990		676,990	676,990
Reinforcement Bars	Lbs.	66,820	41,320	107,140	
Handrail Concrete	Cu.Yds.	4.1	5.2	9.3	
Untreated Piling (25' long)	Lin.Ft.		3,375	3,375	
[illegible]	Cu.Yds.			[illegible]	
[illegible]	Cu.Yds.			[illegible]	
Rock Excavation Structures	Cu.Yds.		38	38	
Untreated Test Piles	Each		2	2	
Slope Wall	Sq.Yds.			1,040	
Channel Excavation	Cu.Yds.			4,190	
Removal-Existing Structure	Each			1	
Tree Removal	Acres			2.2	
C.I.P. Frames & Grates	Each	2		2	
Cofferdam for Pier 1	Each		1	1	
Cofferdam for Pier 3	Each		1	1	
Cofferdam Excavation	Cu.Yds.		677	677	
Seal Coat Concrete	Cu.Yds.		196.6	196.6	
Weep Holes	Each	7		7	
Shoulder Slope	Sq.Yds.		37	37	
Treated Piling (30' long)	Lin.Ft.		150	150	

Log of Borings
Results of borings are shown on the plans only as a guide to bidders in estimating soil conditions which may be encountered in the work.

Approved ____ County Highway Commissioner
Examined ____ County Highway Engineer
Passed ____ Chairman, Committee on Bridges
Approved ____ District Highway Engineer

FOR REFERENCE ONLY

PROFESSIONAL DESIGN FIRM LICENSE #184-001084

© Copyright Hanson Professional Services Inc. 2010

HANSON
Hanson Professional Services Inc.

JOB NO.	SHEET NO.	F.A.U. RTE.	SECTION	COUNTY	TOTAL SHEETS	SHEET NO.
03R1807	38	5103	03-00337-00-BR	Winnebago	66	53
DATE 10/26/10	47 SHEETS			CONTRACT NO. 85523		
				ILLINOIS FED. AID PROJECT		

EXISTING DRAWING
STRUCTURE NUMBER 101-3100

LAYOUT	JKR/SMK	03/23/10
DRAWN	MGH	10/25/10
REVIEWED	JKR/SMK	10/26/10

ID 25.200
I:\03Jobs\03R\807\Struct\Sheet\S-0335-E.dgn

F.A.S. 88	75B 95F	Winnebago	14	3

SHEET No
SHEETS

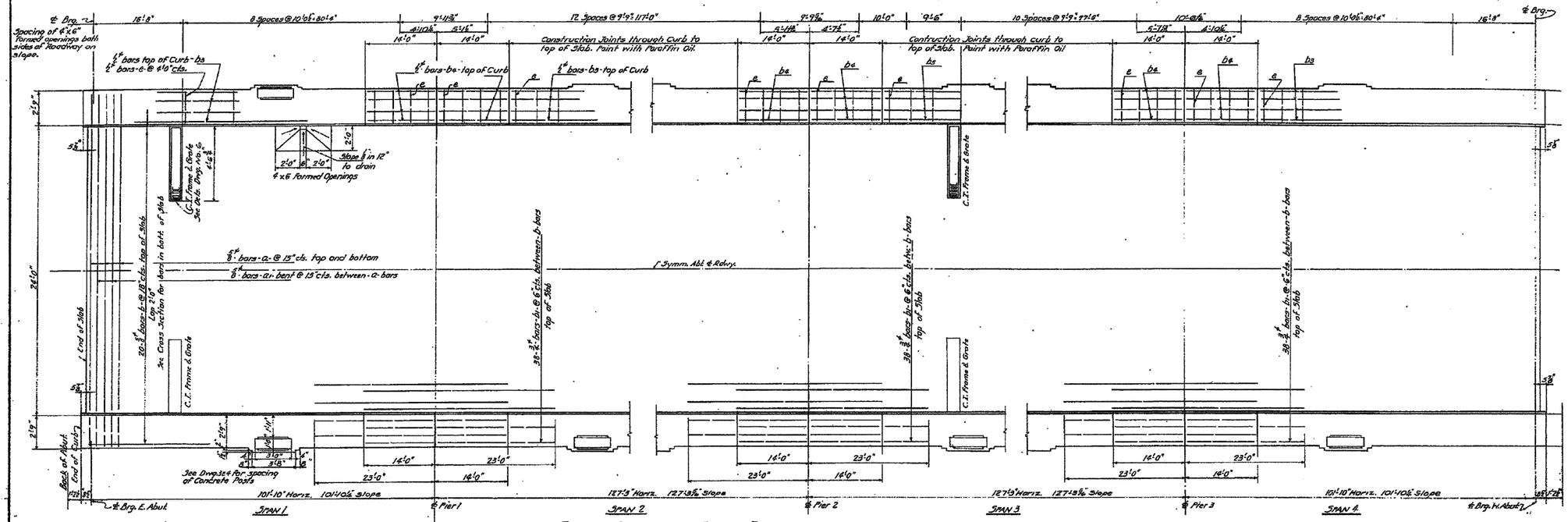

PLAN SHOWING SLAB REINFORCEMENT

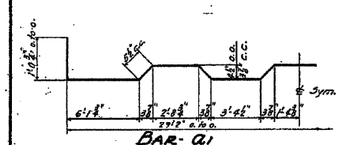

BAR- a1

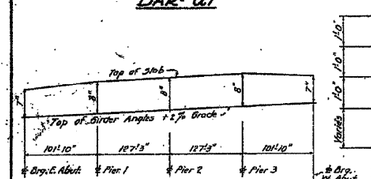

LONGITUDINAL SECTION SHOWING RELATION OF SLAB & TOP OF GIRDERS

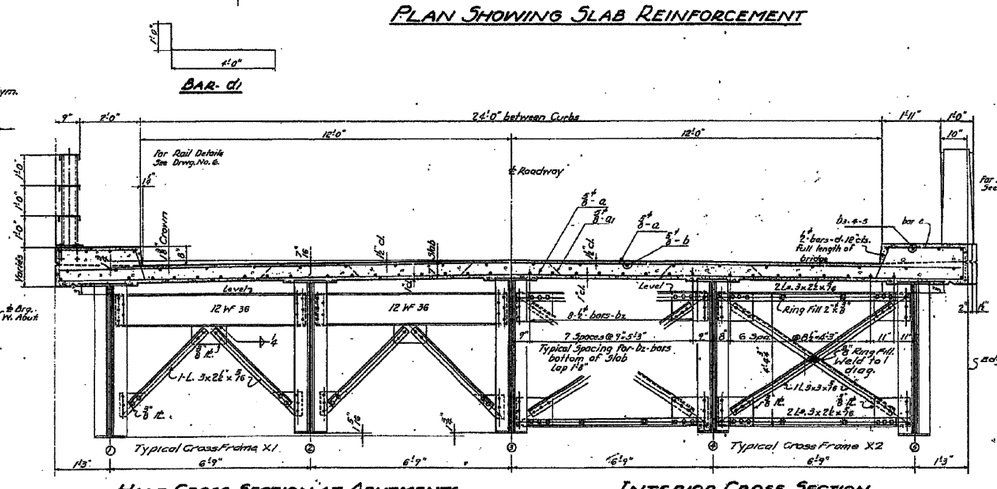

HALF CROSS SECTION AT ABUTMENTS

INTERIOR CROSS SECTION

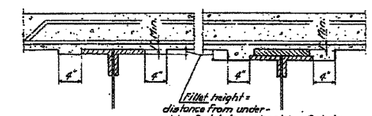

TOP FLANGE ENCASEMENT

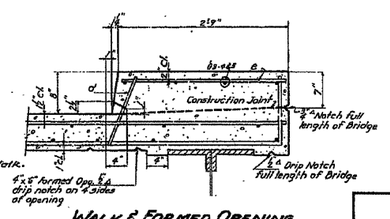

WALK & FORMED OPENING

BILL OF MATERIAL: SPAN

BAR	NO.	SIZE	LENGTH	SH
a	734	5/8"	29'-5"	
a1	367	5/8"	32'-0"	
b	360	5/8"	27'-6"	
b1	114	5/8"	37'-0"	
b2	812	1/2"	27'-5"	
b3	64	1/2"	23'-9"	
b4	40	1/2"	19'-6"	
b5	64	1/2"	26'-0"	
d	720	1/2"	1'-0"	
d1	76	5/8"	5'-0"	
e	240	1/2"	2'-6"	
e1	72	1/2"	2'-6"	
Class "A" Concrete			Cu. Yds.	
Handrail Concrete			Cu. Yds.	
Reinforcement Bars			Lbs.	6
C.I. Frames & Grates			Each	
Structural Steel			Lbs.	67

Note: Cut slab bars in field at C.I. and Grates.

APPROVED — COUNTY SUPERINTENDENT OF HIGHWAYS
EXAMINED — BRIDGE ENGINEER
PASSED — ENGINEER OF DESIGN
APPROVED — CHIEF HIGHWAY ENGINEER

ALFRED BENESCH & ASSOCIATES
CONSULTING ENGINEERS
30 EAST ADAMS ST. CHICAGO 3, ILL.

SLAB DETAILS
KISHWAUKEE RIVER BRIDGE
PROJECT S-64(3)
F.A.S. RTE. 88 S.A. RTE. 3
SECTION 75-B-F
WINNEBAGO COUNTY
STATION 88+57

EXISTING DRAWING
STRUCTURE NUMBER 101-3100

FOR REFERENCE ONLY

PROFESSIONAL DESIGN FIRM LICENSE #184-001084

© Copyright Hanson Professional Services Inc. 2010

HANSON
Hanson Professional Services Inc.

JOB NO.	SHEET NO.	F.A.U. RTE.	SECTION	COUNTY	TOTAL SHEETS	SHEET NO.
03R1807	39	5103	03-00337-00-BR	Winnebago	66	54
DATE 10/26/10	47 SHEETS			CONTRACT NO. 85523		
			ILLINOIS FED. AID PROJECT			

LAYOUT	MR/SMK	10/23/10
DRAWN	MGM	10/25/10
REVIEWED	MR/SMK	10/26/10

10-25-2010
I:\03_Jobs\03R807\Struct\Sheet's\03-Ex1st Dwg.dgn

FAP. 88	75B 75F	Winnebago	14	4

SHEET NO.
SHEETS

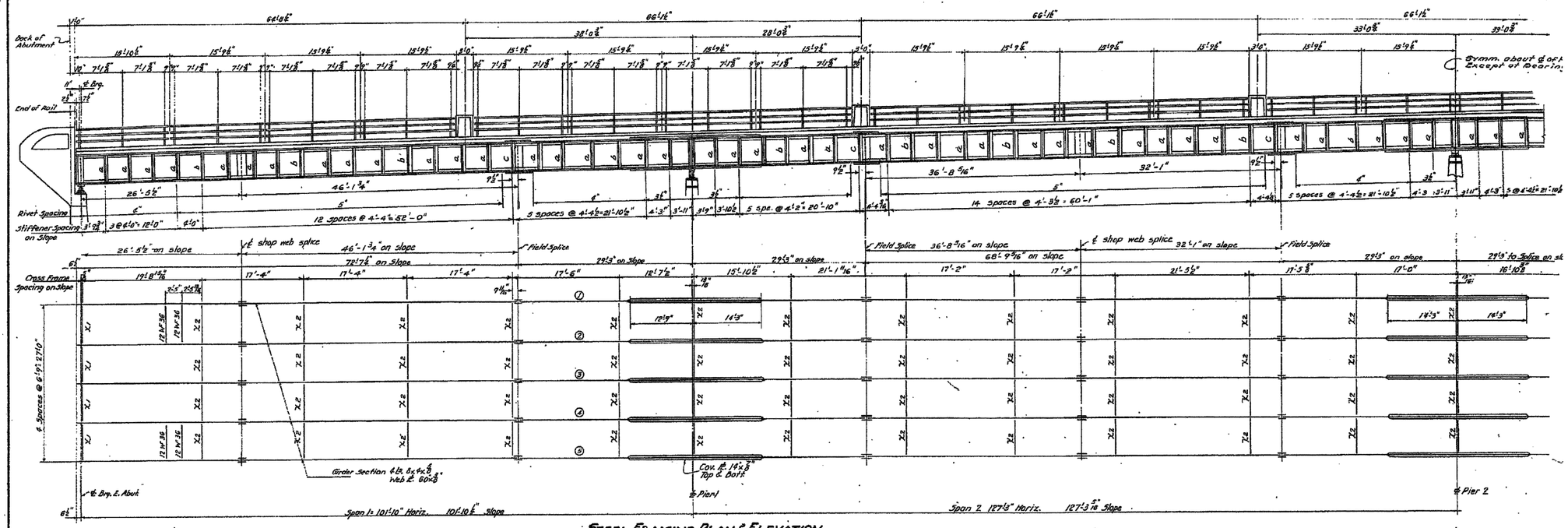

STEEL FRAMING PLAN & ELEVATION

Scale: ⅛"=1'-0"

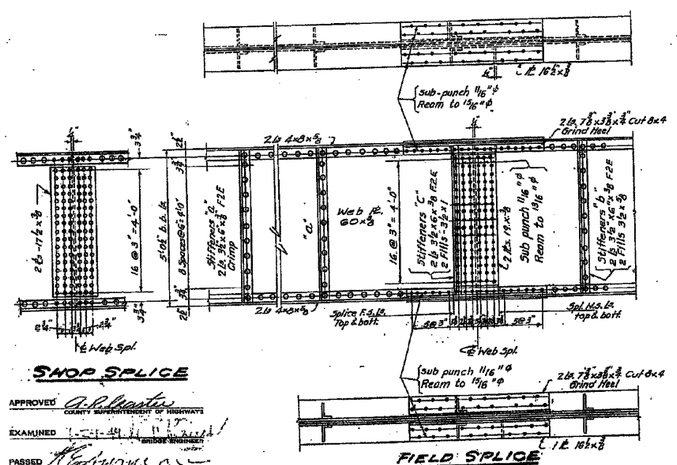

SHOP SPLICE

APPROVED — COUNTY SUPERVISOR OF HIGHWAYS
EXAMINED — BRIDGE ENGINEER
PASSED — ENGINEER OF DESIGN
APPROVED — CHIEF HIGHWAY ENGINEER

FIELD SPLICE
TYPICAL SPLICE DETAILS

Scale: ½"=1'-0"

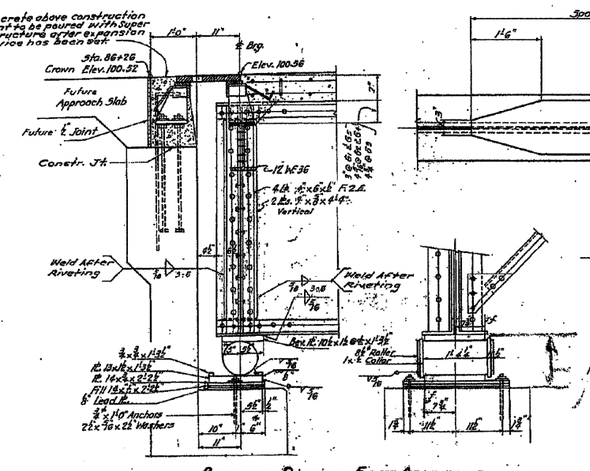

BEARING DETAILS EAST ABUTMENT

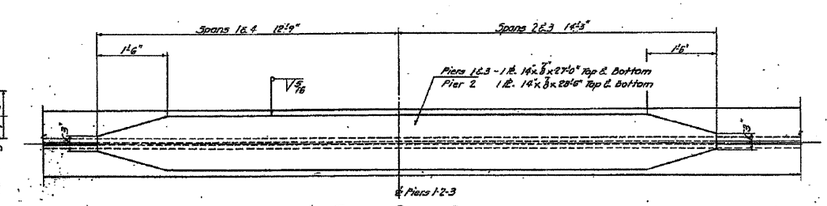

COVER PLATE DETAILS

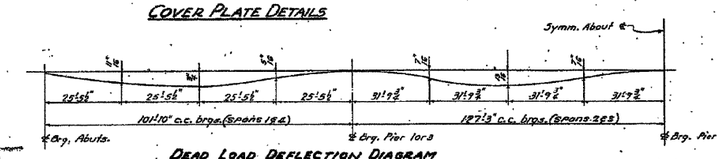

DEAD LOAD DEFLECTION DIAGRAM

Note to Erector: Increase each dimension marked thus * by same amount if abutment has moved or if temp. is above 30°F. Decrease each by same amount if temp. is below 30°F.

ATES
. ILL.

FRAMING PLAN & DETAILS
KISHWAUKEE RIVER BRIDGE
PROJECT S-64(3)
F.A.S. RTE. 88 S.A. RTE. 3
SECTION 75-B-F
WINNEBAGO COUNTY
STATION 88+57

EXISTING DRAWING
STRUCTURE NUMBER 101-3100

FOR REFERENCE ONLY

PROFESSIONAL DESIGN FIRM LICENSE #184-001084

© Copyright Hanson Professional Services Inc. 2010

HANSON
Hanson Professional Services Inc.

JOB NO. 03R1807
DATE 10/26/10
SHEET NO. 40
47 SHEETS

F.A.U. RTE.	SECTION	COUNTY	TOTAL SHEETS	SHEET NO.
5103	03-00337-00-BR	Winnebago	66	55
		CONTRACT NO. 85523		
	ILLINOIS FED. AID PROJECT			

LAYOUT	JKR/SMK	08/23/10
DRAWN	MGM	10/25/10
REVIEWED	JKR/SMK	10/26/10

10-29-2010
I:\03 Jobs\03R1807\Structure\Steel\S-CAD-E-List Dwg.dgn

F.A.P. 88	78B 75F	Winnebago	16	5

SHEET No. 15
SHEETS 19

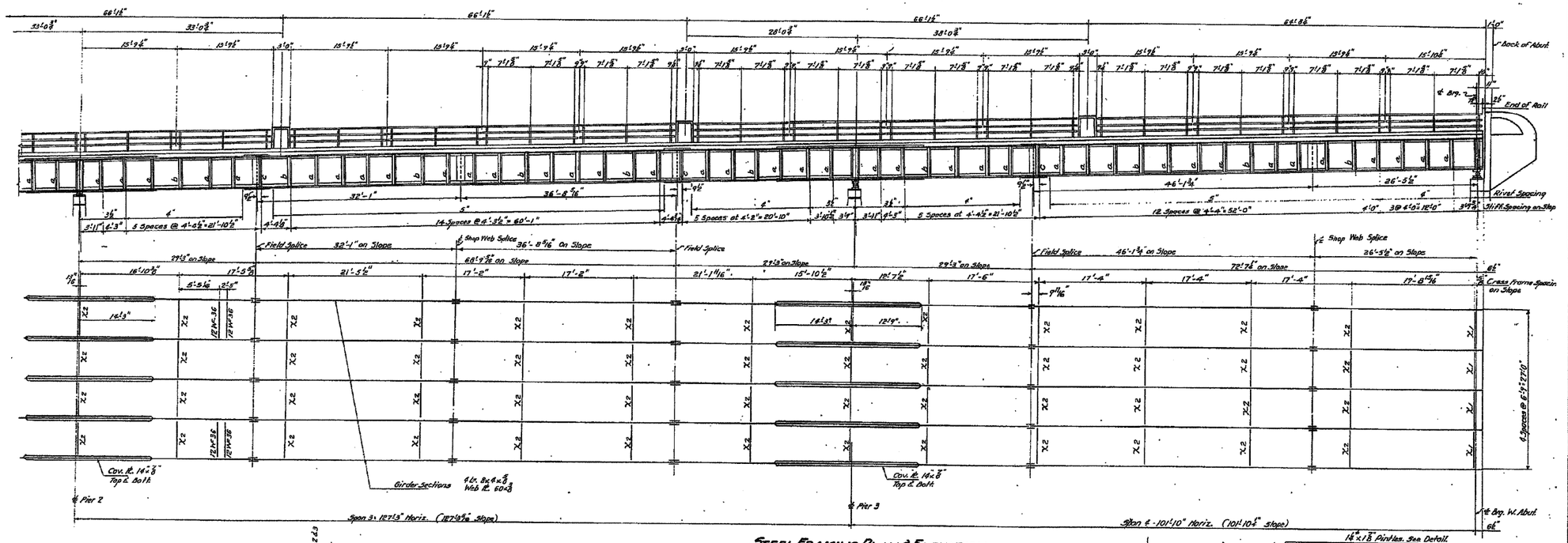

STEEL FRAMING PLAN & ELEVATION

Scale: ⅛" = 1'-0"

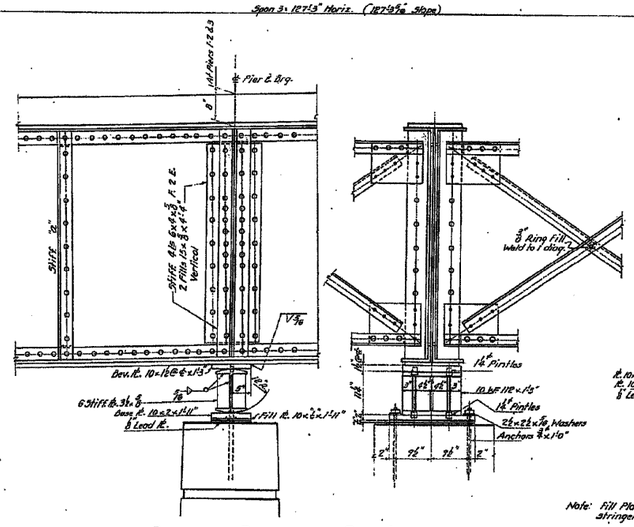

BEARING DETAILS AT PIER 1

Pier 3 Similar

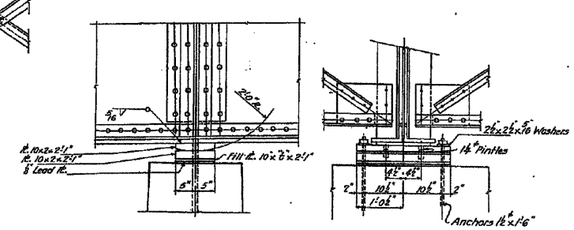

BEARING DETAILS - PIER 2

Parts not shown same as at Pier 1

Note: Fill Plate thickness ⅛" to ⅞" under center stringer. No other fill plates.

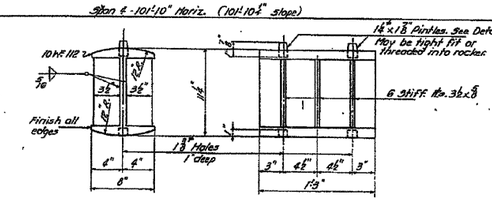

DETAIL OF ROCKERS AT PIERS 1 & 3

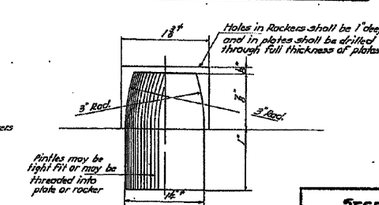

DETAIL OF PINTLES

APPROVED — COUNTY SUPERINTENDENT OF HIGHWAYS
EXAMINED — BRIDGE ENGINEER
PASSED — ENGINEER OF DESIGN
APPROVED — CHIEF HIGHWAY ENGINEER

ALFRED BENESCH & ASSOCIATES
CONSULTING ENGINEERS
30 EAST ADAMS ST. CHICAGO 3, ILL.

STEEL FRAMING PLAN & DETAILS
KISHWAUKEE RIVER BRIDGE
PROJECT S-64(3)
F.A.S. RTE. 88 S.A. RTE. 3
SECTION 75-B.F.
WINNEBAGO COUNTY
STATION 88+57

EXISTING DRAWING
STRUCTURE NUMBER 101-3100

LAYOUT	JKR/SMK	05/23/10
DRAWN	MGM	10/25/10
REVIEWED	JKR/SMK	10/26/10

10/29/2010
N:\03jobs\03R1807\Struct\Sheet S-04-E-Exist Dwg.dgn

FOR REFERENCE ONLY

PROFESSIONAL DESIGN FIRM LICENSE #184-001084

© Copyright Hanson Professional Services Inc. 2010

HANSON
Hanson Professional Services Inc.

JOB NO. 03R1807
DATE 10/26/10
SHEET NO. 41
47 SHEETS

F.A.U. RTE.	SECTION	COUNTY	TOTAL SHEETS	SHEET NO.
5103	03-00337-00-BR	Winnebago	66	56
		CONTRACT NO. 85523		
	ILLINOIS	FED. AID PROJECT		

FAS.88	75B 18F	Winnebago	14	8

SHEET NO. 8
SHEETS 18

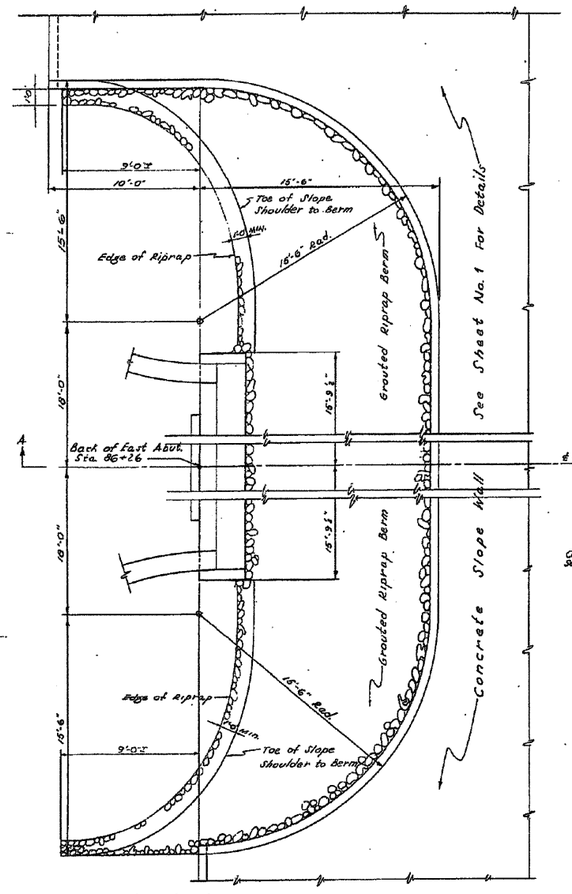

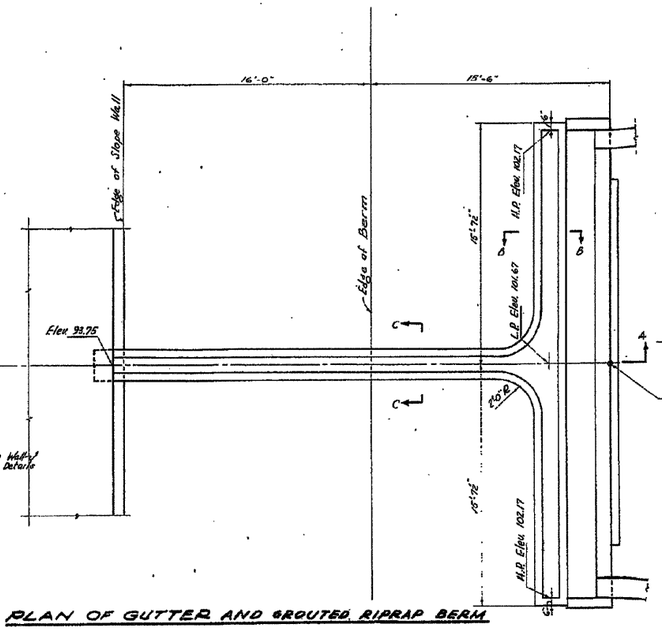

PLAN OF GUTTER AND GROUTED RIPRAP BERM AT ABUTMENTS

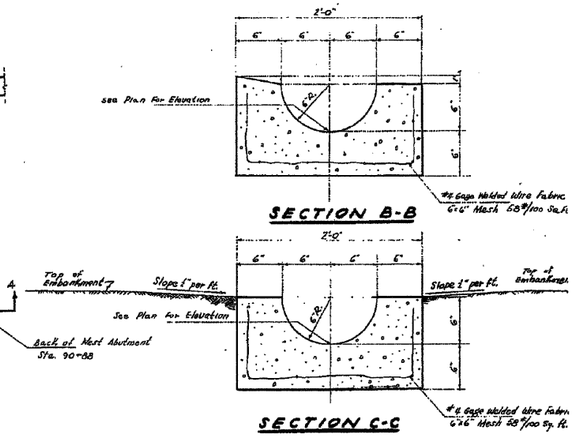

NOTES

Concrete Gutters shall be class "X" concrete. Estimated Quantity 16 cu yds. included in quantity of class "X" concrete in Bill of Material on Sheet No. 1 of 12. Cost of furnishing Welded Wire Fabric shall be included in contract unit price for class "X" concrete.
Estimated quantity of Grouted Riprap - 89 Sq. Yds.

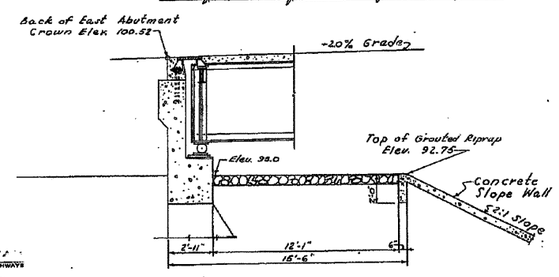

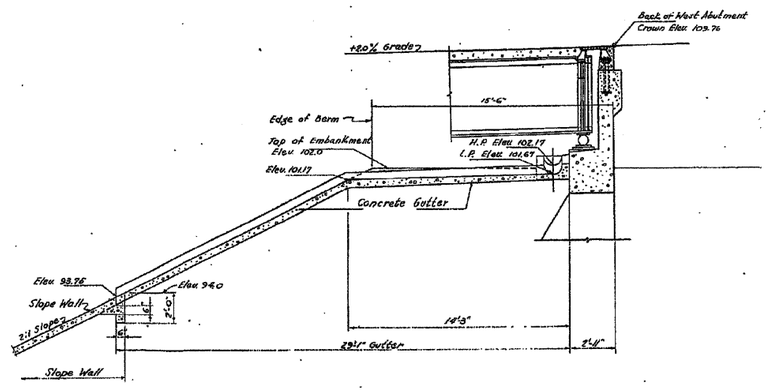

LONGITUDINAL SECTION A-A

APPROVED — COUNTY SUPERINTENDENT OF HIGHWAYS
EXAMINED — BRIDGE ENGINEER
PASSED — ENGINEER OF DESIGN
APPROVED — CHIEF HIGHWAY ENGINEER

ALFRED BENESCH & ASSOCIATES
CONSULTING ENGINEERS
20 EAST ADAMS ST. CHICAGO 3, ILL.

GROUTED RIPRAP AND CONCRETE GUTTER AT ABUTMENTS
KISHWAUKEE RIVER BRIDGE
PROJECT S-64(3)
F.A.S. RTE. 88 S.A. RTE. 3
SECTION 75-B
WINNEBAGO COUNTY
STATION 88+57

EXISTING DRAWING
STRUCTURE NUMBER 101-3100

FOR REFERENCE ONLY

PROFESSIONAL DESIGN FIRM LICENSE #184-001084

© Copyright Hanson Professional Services Inc. 2010

HANSON
Hanson Professional Services Inc.

JOB NO. 03R1807
DATE 10/26/10
SHEET NO. 42
47 SHEETS

F.A.U. RTE.	SECTION	COUNTY	TOTAL SHEETS	SHEET NO.
5103	03-00337-00-BR	Winnebago	66	57
		CONTRACT NO. 85523		
		ILLINOIS FED. AID PROJECT		

LAYOUT	JKR/SMK	08/23/10
DRAWN	MDM	10/25/10
REVIEWED	JKR/SMK	10/26/10

10/29/2010
I:\03Jobs\03R1807\StructSheet\S-042-Exist Dwg.dgn

SBI.00	73B 73F	Winnebago	14	9	SHEET No. 2 SHEETS 19

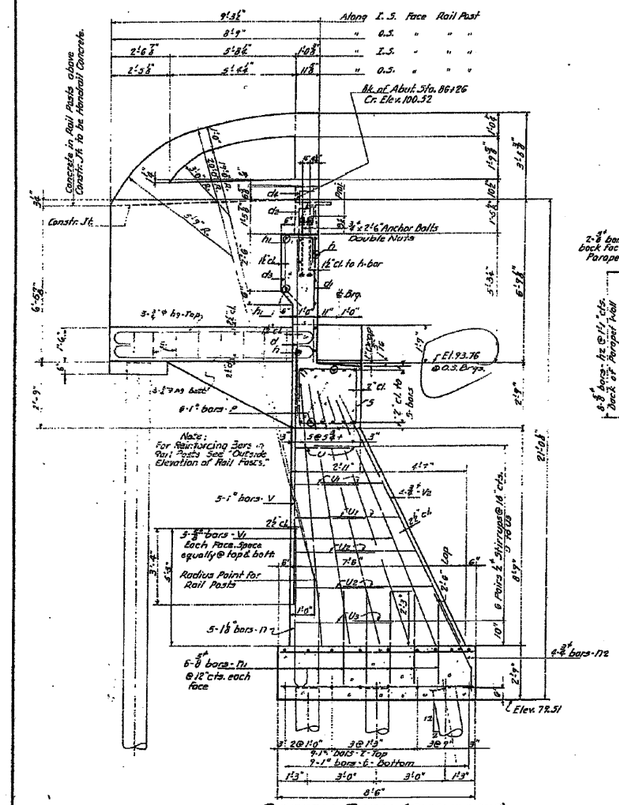

SECTION THRU ABUTMENT & INSIDE ELEVATION OF RAIL POSTS

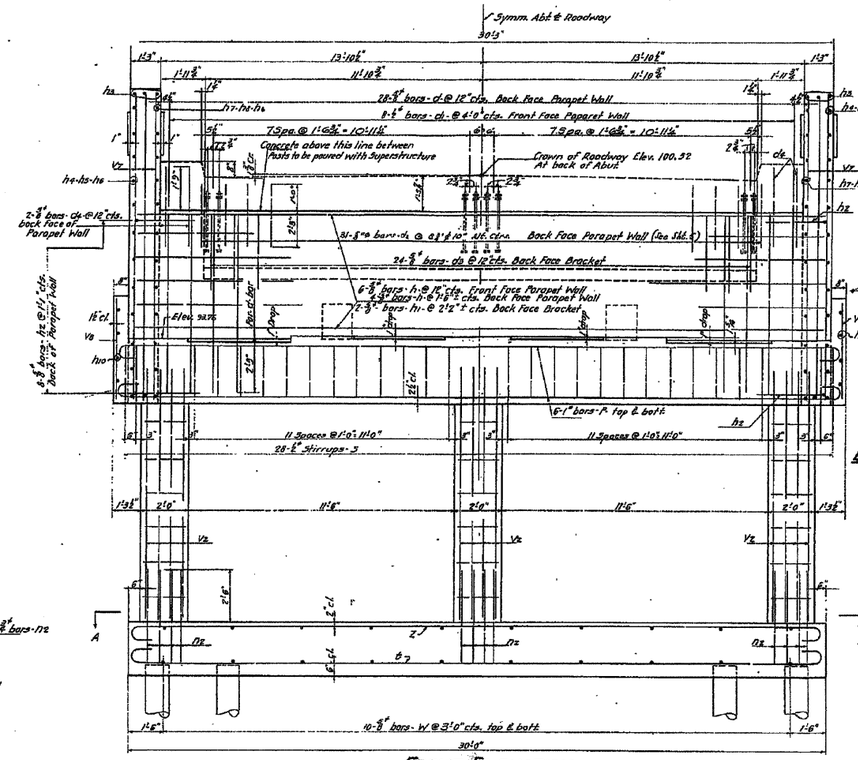

FRONT ELEVATION

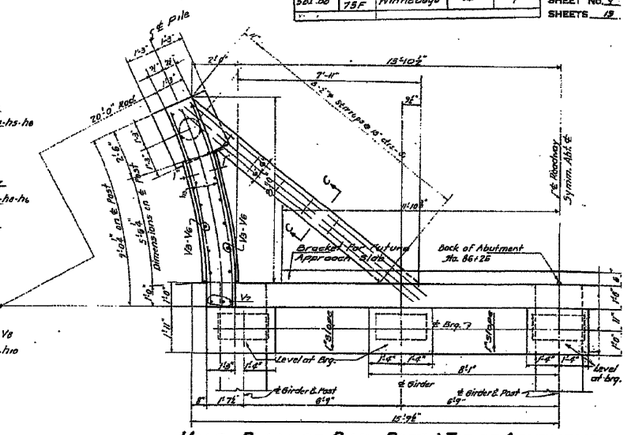

HALF PLAN OF RAIL POST & TOP OF ABUTMENT

Indicates 10 Ton Pile. Estimated Length 33'-0" - 2 Required - Treated

Indicates 18 Ton Pile. Estimated Length 23'-0" - 14 Required. Untreated.

Indicates 20 Ton Pile. Estimated Length 23'-0" - 10 Required. Untreated.

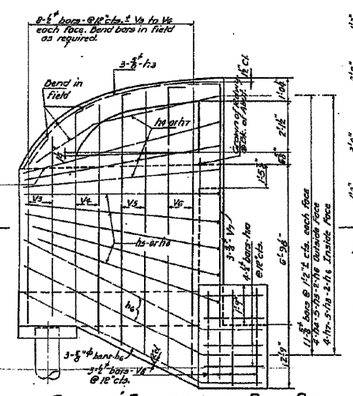

OUTSIDE ELEVATION OF RAIL POSTS

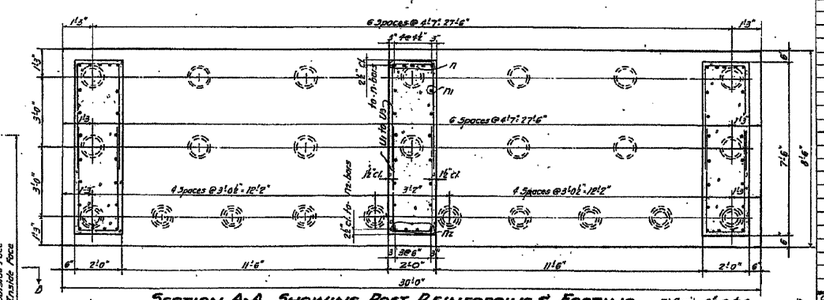

SECTION A-A SHOWING POST REINFORCING & FOOTING

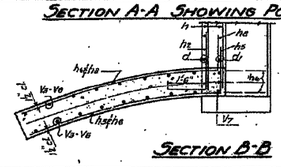

SECTION B-B

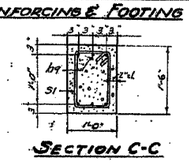

SECTION C-C

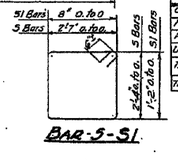

BAR S-S1

BILL OF MATERIAL: EAST ABUTMENT

BAR	NO.	SIZE	LENGTH	SHAPE
d	28	3/8"	7'-6"	
d1	8	1/2"	5'-3"	
d2	31	3/8"	3'-9"	
d3	24	3/8"	5'-7"	
d4	4	3/8"	4'-6"	
h	10	3/8"	29'-3"	
h1	2	3/8"	23'-6"	
h2	16	3/8"	6'-9"	
h3	6	3/8"	10'-0"	
h4	8	3/8"	8'-6"	
h5	18	3/8"	10'-6"	
h6	14	3/8"	11'-0"	
h7	8	3/8"	9'-0"	
h8	10	3/8"	11'-0"	
h9	12	1/2"	15'-6"	
h10	8	1/2"	2'-6"	
n	15	1 1/8"	8'-6"	
n1	36	3/8"	4'-0"	
n2	12	3/8"	6'-6"	
p	12	1"	33'-9"	
s	28	1/2"	11'-0"	
t	9	1"	33'-0"	
s1	16	1/2"	4'-9"	
u	6	1/2"	6'-6"	
u1	12	1/2"	8'-0"	
u2	12	1/2"	9'-6"	
u3	6	1/2"	10'-9"	
v	15	1"	10'-9"	
v1	30	3/8"	11'-0"	
v2	12	3/8"	11'-6"	
v3	8	1/2"	6'-3"	
v4	8	1/2"	7'-9"	
v5	8	1/2"	11'-5"	
v6	8	1/2"	12'-6"	
v7	6	3/8"	14'-3"	
v8	6	1/2"	9'-0"	
w	20	3/8"	8'-0"	
z	7	1"	33'-0"	
Class "C" Concrete			Cu. Yds.	59.8
Handrail Concrete			Cu. Yds.	2.7
Reinforcement Bars			Lbs.	7910
Untreated Piling (Est. lgth. 25')			Lin. Ft.	800
Timber Test Piles-Untreated			Each	1
Treated Piling (Est. lgth. 35')			Lin. Ft.	70

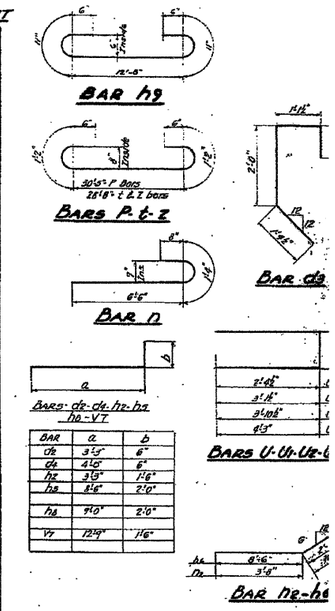

ALFRED BENESCH & ASSOCIATES
CONSULTING ENGINEERS
30 EAST ADAMS ST. CHICAGO 3, ILL.

EAST ABUTMENT
KISHWAUKEE RIVER BRIDGE
PROJECT S-69(3)
F.A.S. RTE. 88 S.A. RTE. 3
SECTION 75-B
WINNEBAGO COUNTY
STATION 88+57

APPROVED — COUNTY SUPERINTENDENT OF HIGHWAYS
EXAMINED — BRIDGE ENGINEER
PASSED — DIVISION OF DESIGN
APPROVED — CHIEF HIGHWAY ENGINEER

Note: For dimensions not shown see "Inside Elevation of Rail Posts". Horz. bars to be bent in field for curvature of rail post.

EXISTING DRAWING
STRUCTURE NUMBER 101-3100

FOR REFERENCE ONLY

PROFESSIONAL DESIGN FIRM LICENSE #184-001084

© Copyright Hanson Professional Services Inc. 2010

HANSON
Hanson Professional Services Inc.

JOB NO.	SHEET NO. 43	F.A.U. RTE.	SECTION	COUNTY	TOTAL SHEETS	SHEET NO.
03R1807	47 SHEETS	5103	03-00337-00-BR	Winnebago	66	58
DATE 10/26/10				CONTRACT NO. 85523		
				ILLINOIS FED. AID PROJECT		

LAYOUT	JKR/SMK	08/23/10
DRAWN	MGM	10/25/10
REVIEWED	JKR/SMK	10/26/10

10/29/2010
N:\03Jobs\03R1807\Struct\Sheet\S-043-Exist Drwg.dgn

FAS.88	75B 75F	Winnebago	14	10

SHEET NO. 10
SHEETS 19

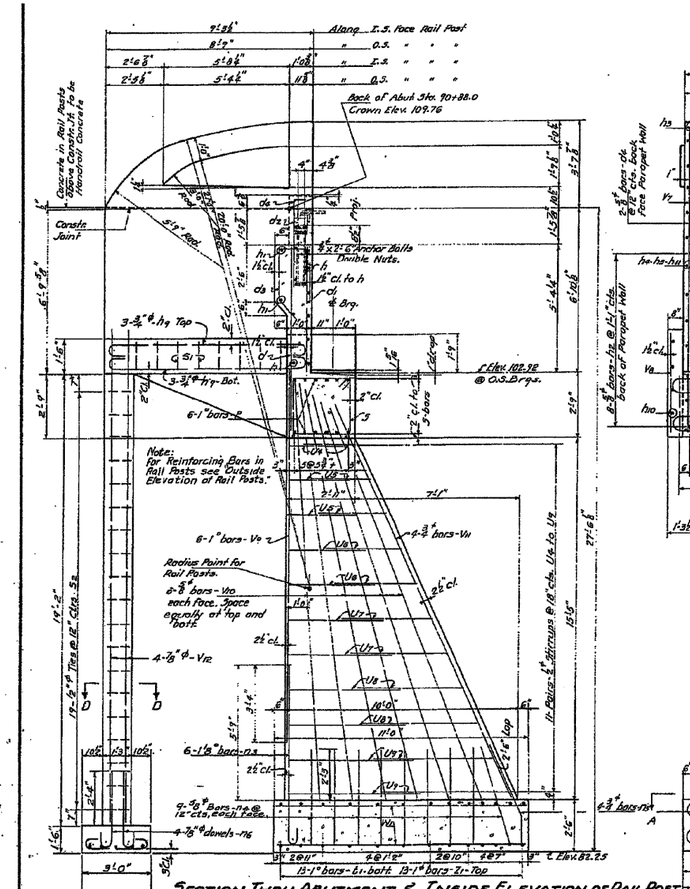

SECTION THRU ABUTMENT & INSIDE ELEVATION OF RAIL POST

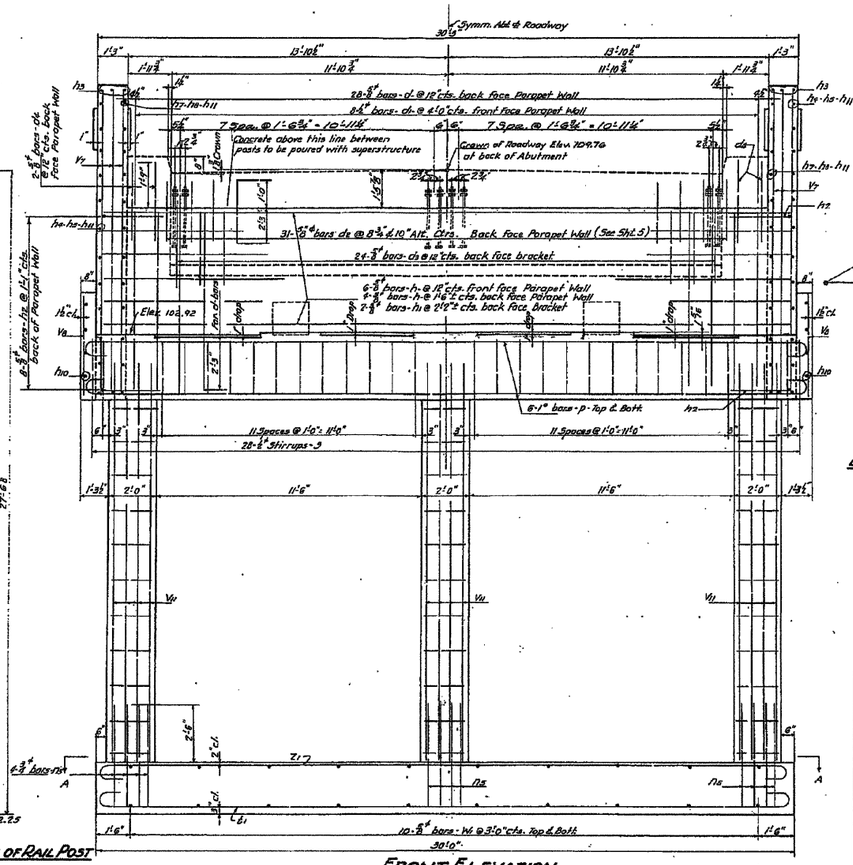

FRONT ELEVATION

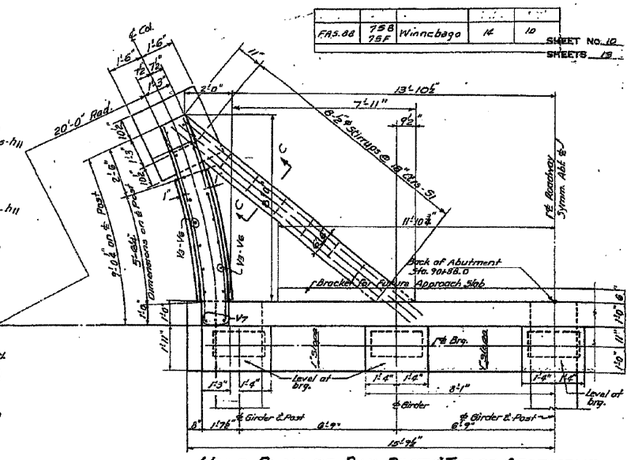

HALF PLAN OF RAIL POST & TOP OF ABUTMENT

BILL OF MATERIAL WEST ABUTMENT

BAR	NO.	SIZE	LENGTH	SHAPE
d	28	⅞"	7'6"	
ds	8	½"	2'9"	
de	31	⅞"	3'7"	
dc	24	⅞"	5'9"	
d4	4	⅞"	4'6"	
h	10	⅞"	29'9"	
h1	2	⅞"	23'6"	
h2	16	⅞"	6'9"	
h3	6	⅞"	10'0"	
h4	8	⅞"	8'6"	
h5	10	⅞"	10'6"	
h7	8	⅞"	9'0"	
h8	10	⅞"	11'0"	
h9	12	⅞"	13'6"	
h10	8	½"	2'6"	
h11	14	⅝"	11'0"	
n3	16	1⅛"	9'3"	
n4	54	⅞"	8'3"	
n5	12	⅞"	6'9"	
n6	8	7/8"	4'9"	
P	12	1"	33'9"	
s	28	½"	11'0"	
t1	19	1"	33'0"	
t2	20	7/8"	4'6"	
U4	6	½"	6'3"	
U5	12	½"	7'9"	
U6	12	½"	9'0"	
U7	12	½"	10'3"	
U8	12	½"	11'3"	
U9	12	½"	13'0"	
U1	16	7/8"	4'9"	
V3	8	½"	8'3"	
V4	8	½"	9'9"	
V5	8	½"	11'3"	
V6	8	½"	12'6"	
V7	6	½"	14'3"	
V8	6	½"	4'0"	
V9	18	1"	16'9"	
V10	36	⅞"	18'0"	
V11	12	½"	18'6"	
V12	8	7/8"	21'0"	
W1	20	⅞"	10'6"	
Z1	13	1"	39'0"	
S2	38	1⅛"	4'9"	
Class "X" Concrete			Cu. Yds.	80.2
Handrail Concrete			Cu. Yds.	2.5
Reinforcement Bars			Lbs.	10830

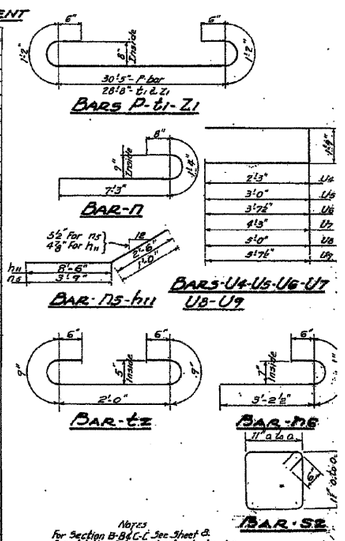

Note: For dimensions not shown see Inside elevation of Rail Posts. Horizontal bars to bent in field for curvature of rail posts.

PLAN OF FOOTING

SECTION D-D

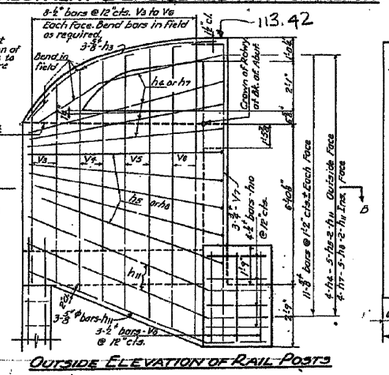

OUTSIDE ELEVATION OF RAIL POSTS

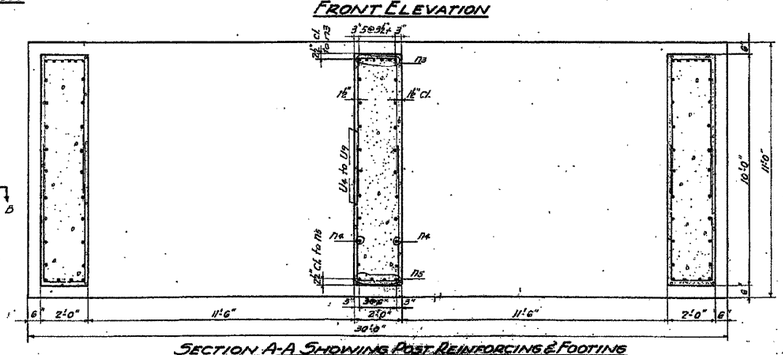

SECTION A-A SHOWING POST REINFORCING & FOOTING

Notes
For Section B-B, C-C See Sheet 8.
For details of bars-d2-d3-d4-h8-h9 n7-n8-V2, 3 & 5, See Sheet 8

APPROVED — COUNTY HIGHWAY ENGINEER
EXAMINED — ENGINEER
PASSED — CHAIRMAN OF COUNTY BOARD
APPROVED — CHIEF HIGHWAY ENGINEER

ALFRED BENESCH & ASSOCIATES
CONSULTING ENGINEERS
33 EAST ADAMS ST. CHICAGO 3, ILL.

WEST ABUTMENT
KISHWAUKEE RIVER BRIDGE
PROJECT S-6 (3)
F.A.S. RTE. 88 S.A. RTE. 3
SECTION 75-B
WINNEBAGO COUNTY
STATION 88+57

EXISTING DRAWING
STRUCTURE NUMBER 101-3100

FOR REFERENCE ONLY

PROFESSIONAL DESIGN FIRM LICENSE #184-001084

© Copyright Hanson Professional Services Inc. 2010

HANSON
Hanson Professional Services Inc.

JOB NO. 03R1807
DATE 10/26/10
SHEET NO. 44
47 SHEETS

F.A.U. RTE.	SECTION	COUNTY	TOTAL SHEETS	SHEET NO.
5103	03-00337-00-BR	Winnebago	66	59
		CONTRACT NO. 85523		
		ILLINOIS FED. AID PROJECT		

LAYOUT	JKR/SMK	08/23/10
DRAWN	MGM	10/25/10
REVIEWED	JKR/SMK	10/26/10

10/29/2010
I:\03jobs\03R1807\StructSheets\S-044-Exist Dwg.dgn

38I 88	75B 75F	Winnebago	14	11	SHEET No. 11 SHEETS 18

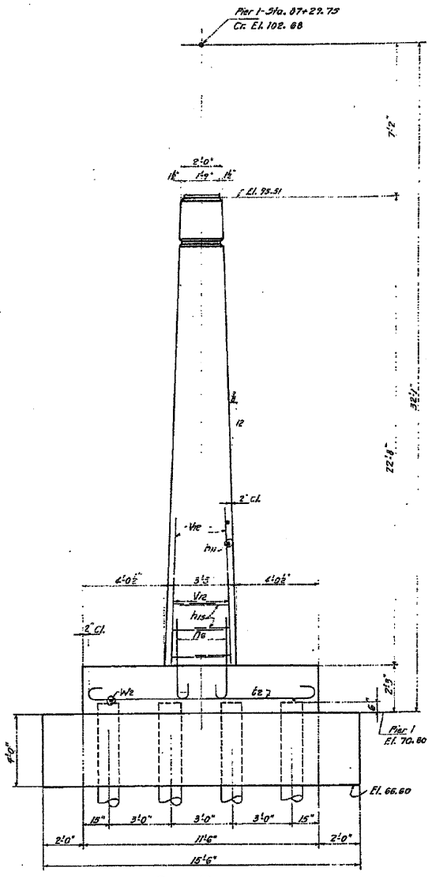

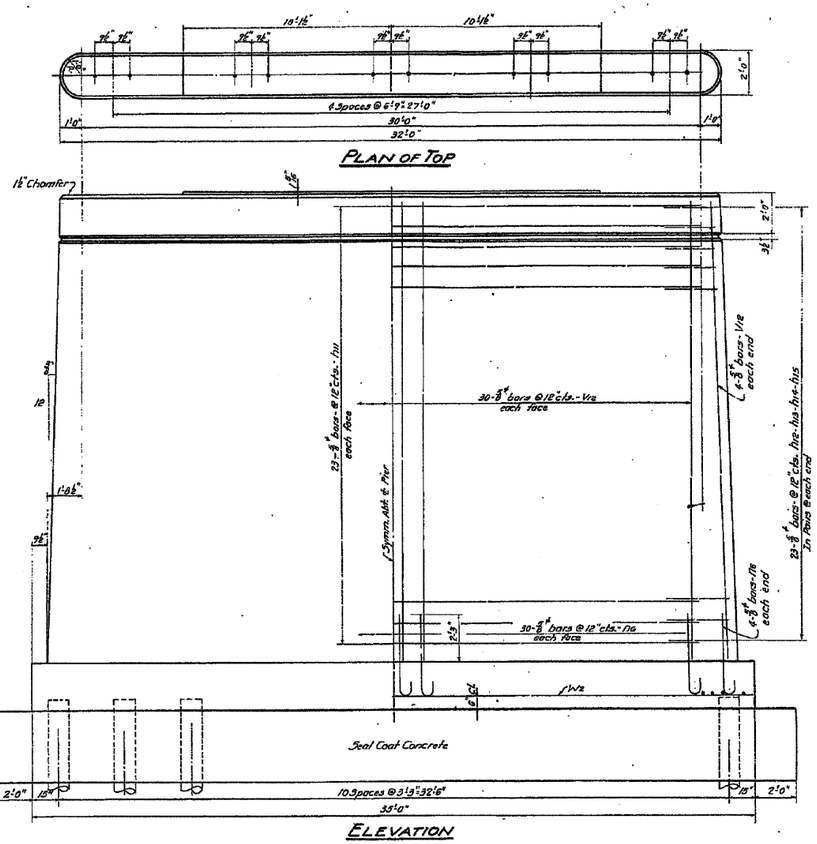

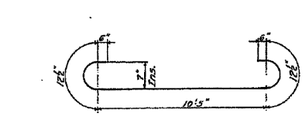

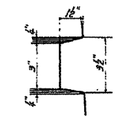

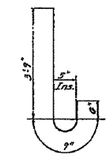

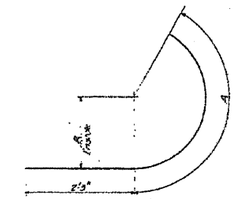

BAR	R	A
h12	0'-9½"	2'-5"
h13	1'-0"	2'-6"
h14	1'-2½"	2'-9"
h15	1'-6½"	3'-3"

DETAIL OF BARS h12-h13-h14-h15

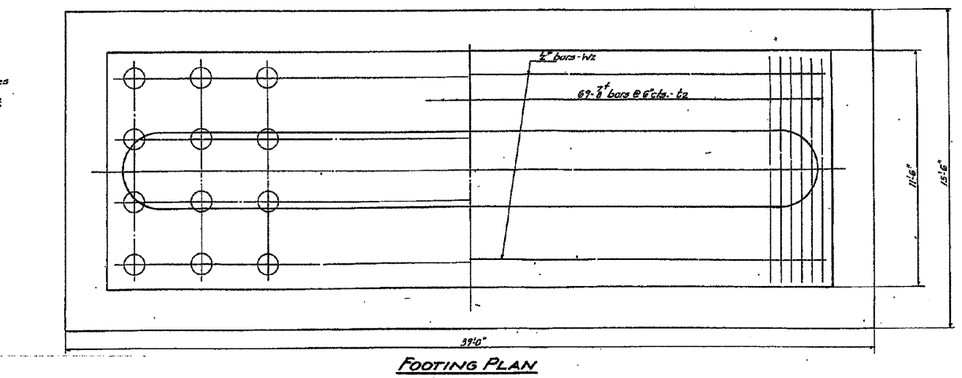

44-Untreated Timber Piles
Capacity-20 Tons
Estimated Length 25 Ft.

BILL OF MATERIAL-PIER 1

BAR	No.	SIZE	LENGTH	BAR	No.	SIZE	LENGTH
Vr2	68	⅞"	22'-6"	h11	46	⅞"	30'-0"
h16	60	⅞"	5'-0"	h12	24	⅞"	4'-6"
				h13	24	⅞"	4'-9"
t2	67	⅞"	13'-6"	h14	20	⅞"	5'-0"
				h15	20	⅞"	5'-6"
Wr	4	½"	18'-9"				
Class-A-Concrete					Cu.Yds.		106.1
Reinforcement Bars					Lbs.		5800
Seal Coat Concrete					Cu.Yds.		84.5
Cofferdam for Pier 1					Each		1
Cofferdam Excavation					Cu.Yds.		370
Untreated Piles (Est. Lgth. 25 Ft.)					Lin.Ft.		1100
Timber Test Piles-Untreated					Each		1

APPROVED — COUNTY SUPERINTENDENT OF HIGHWAYS
EXAMINED — BRIDGE ENGINEER
PASSED — ENGINEER OF DESIGN
APPROVED — CHIEF HIGHWAY ENGINEER

Revised 11/17/49- Cofferdam Pay Item

ALFRED BENESCH & ASSOCIATES
CONSULTING ENGINEERS
30 EAST ADAMS ST. CHICAGO 3, ILL.

PIER 1
KISHWAUKEE RIVER BRIDGE
PROJECT S-64(3)
F.A.S. RTE. 88 S.A. RTE. 3
SECTION 75-B
WINNEBAGO COUNTY
STATION 88+57

EXISTING DRAWING
STRUCTURE NUMBER 101-3100

FOR REFERENCE ONLY

PROFESSIONAL DESIGN FIRM LICENSE #184-001084

© Copyright Hanson Professional Services Inc. 2010

HANSON
Hanson Professional Services Inc.

JOB NO. 03R1807
DATE 10/26/10
SHEET NO. 45
47 SHEETS

F.A.U. RTE.	SECTION	COUNTY	TOTAL SHEETS	SHEET NO.
5103	03-00337-00-BR	Winnebago	66	60
		CONTRACT NO. 85523		
	ILLINOIS FED. AID PROJECT			

LAYOUT	JKR/SMK	08/23/10
DRAWN	MGM	10/25/10
REVIEWED	JKR/SMK	10/26/10

10/25/2010
I:\03_Data\03R1807\Struct\Sheet\S-045-E-1st Design

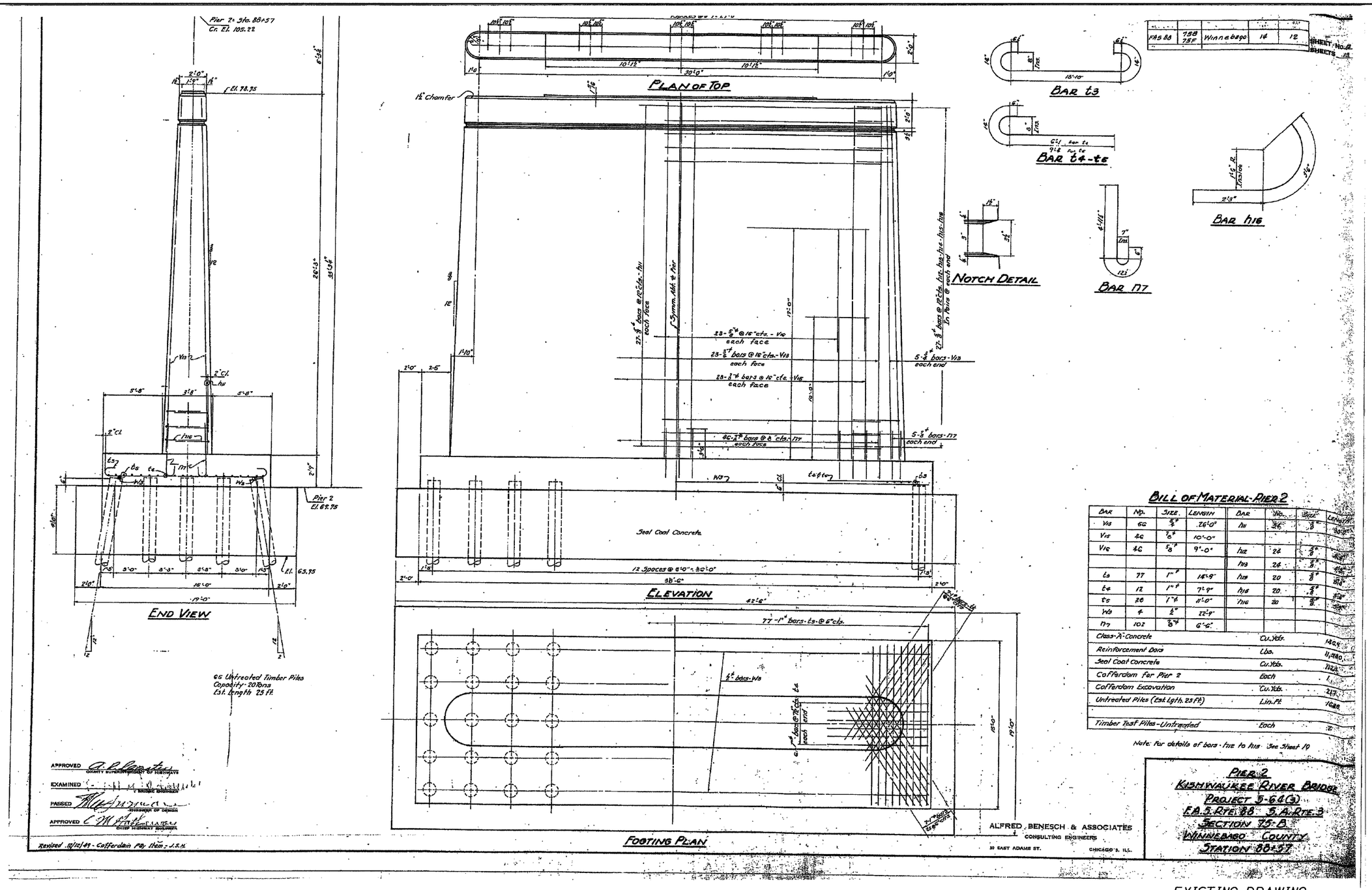

FAS 88	75B 75F	Winnebago	14	12

SHEET No. 8
SHEETS 18

Bill of Material - Pier 2

Bar	No.	Size	Length	Bar	No.	Size	Length
V13	66	5/8"	26'-0"	h11	36	1"	30'-0"
V15	46	5/8"	10'-0"				
V16	46	5/8"	9'-0"	h12	24	5/8"	18'-0"
				h13	24	5/8"	19'-0"
t3	77	1"	14'-9"	h15	20	5/8"	18'-0"
t4	12	1"	7'-9"	h16	20	5/8"	5'-0"
t5	20	1"	11'-0"	h16	20	5/8"	5'-0"
V3	4	5/8"	22'-9"				
h7	102	5/8"	6'-6"				

Class "A" Concrete	Cu. Yds.	1424
Reinforcement Bars	Lbs.	11,880
Seal Coat Concrete	Cu. Yds.	1124
Cofferdam for Pier 2	Each	1
Cofferdam Excavation	Cu. Yds.	217
Untreated Piles (Est. Lgth. 25 ft.)	Lin. Ft.	1680
Timber Test Piles - Untreated	Each	2

Note: For details of bars - see to this - See Sheet 10

EXISTING DRAWING
STRUCTURE NUMBER 101-3100

FOR REFERENCE ONLY

PROFESSIONAL DESIGN FIRM LICENSE #184-001084

© Copyright Hanson Professional Services Inc. 2010

HANSON
Hanson Professional Services Inc.

JOB NO.	SHEET NO.	F.A.U. RTE.	SECTION	COUNTY	TOTAL SHEETS	SHEET NO.
03R1807	46	5103	03-00337-00-BR	Winnebago	66	61
DATE 10/26/10	47 SHEETS			CONTRACT NO. 85523		
				ILLINOIS FED. AID PROJECT		

LAYOUT	JKR/SMK	08/23/10
DRAWN	MGM	10/25/10
REVIEWED	JKR/SMK	10/26/10

10/25/2010
I:\03Jobs\03R1807\Struct\Sheet\S-046-Exist Dwg.dgn

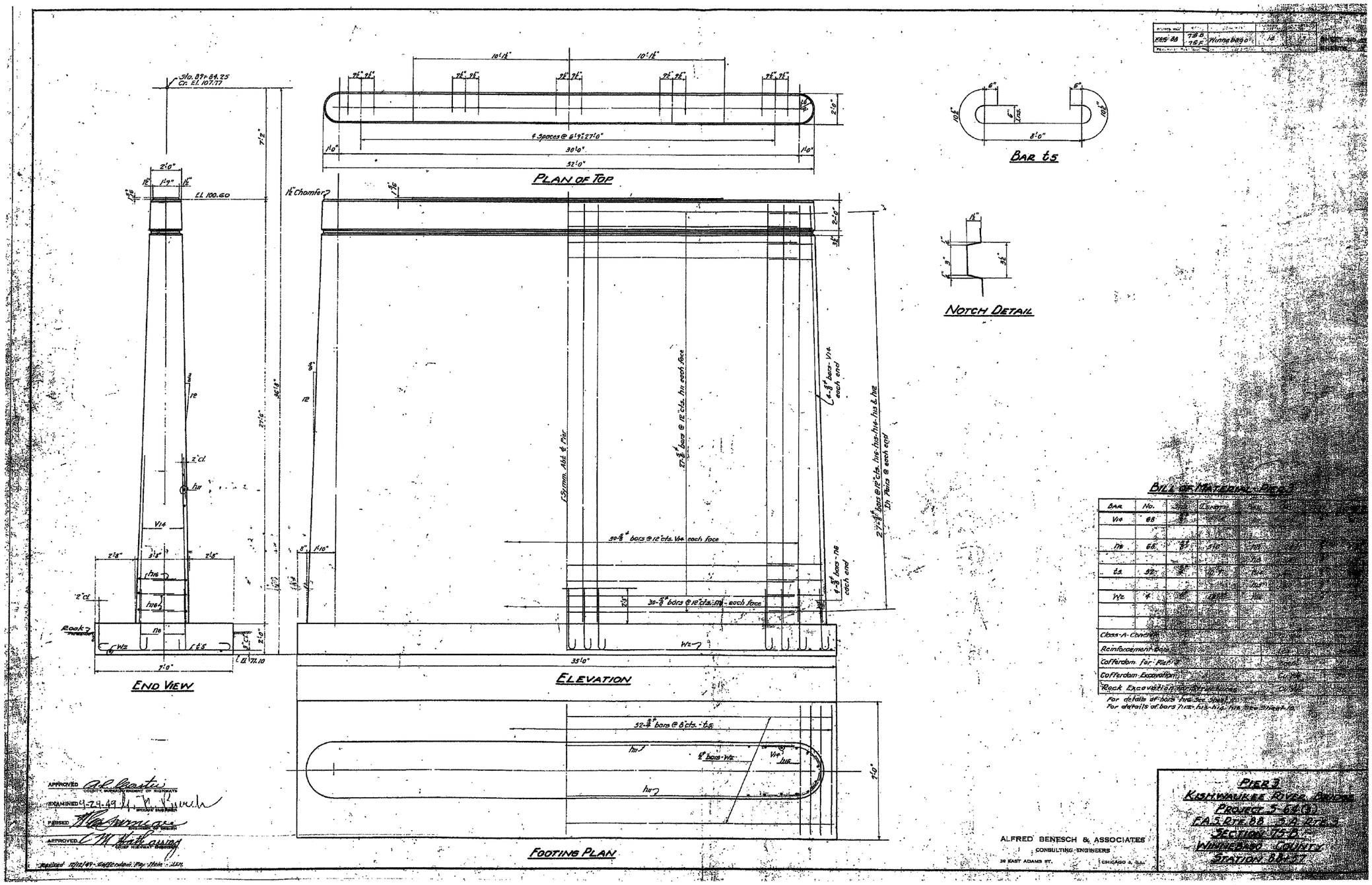

EXISTING DRAWING
STRUCTURE NUMBER 101-3100

FOR REFERENCE ONLY

PROFESSIONAL DESIGN FIRM LICENSE #184-001084

© Copyright Hanson Professional Services Inc. 2010

HANSON
Hanson Professional Services Inc.

JOB NO.	SHEET NO. 47	F.A.U. RTE.	SECTION	COUNTY	TOTAL SHEETS	SHEET NO.
03R1807		5103	03-00337-00-BR	Winnebago	66	62
DATE 10/26/10	47 SHEETS			CONTRACT NO. 85523		
				ILLINOIS FED. AID PROJECT		

LAYOUT	JKR/SMK	08/23/10
DRAWN	MGM	10/25/10
REVIEWED	JKR/SMK	10/26/10

10/26/2010
I:\03 Jobs\03R1807\Struct\Sheet\S-04F-Exist Design

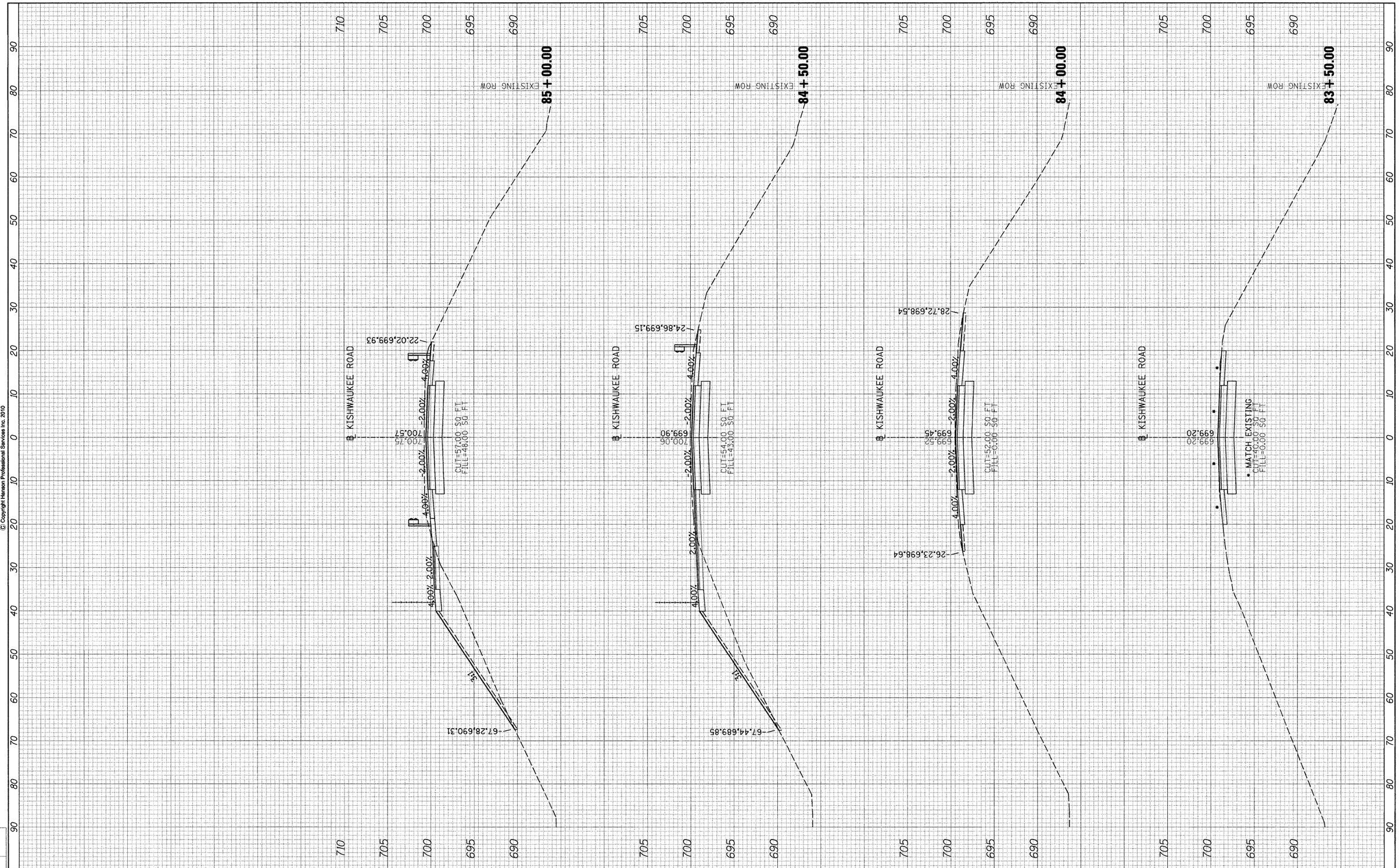

FINAL SURVEY	BY	DATE
SURVEYED		
PLOTTED		
TEMPLATE		
AREAS		
AREAS CHECKED		

NOTE BOOK
NO.

ORIGINAL SURVEY	BY	DATE
SURVEYED		
PLOTTED		
TEMPLATE		
AREAS		
AREAS CHECKED		

NOTE BOOK
NO.

HANSON

© Copyright Hanson Professional Services Inc. 2010

LAYOUT
DRAWN
REVIEWED

FILE NAME = i:\03jobs\03R1807\CADD\Road\Sheet\C-301-XS.dgn

USER NAME = Pop00275
PLOT SCALE = 10.0000 ' / in.
PLOT DATE = 10\27\2010

DESIGNED -
DRAWN -
CHECKED -
DATE -

REVISED -
REVISED -
REVISED -
REVISED -

STATE OF ILLINOIS
DEPARTMENT OF TRANSPORTATION

CROSS SECTIONS
KISHWAUKEE RIVER BRIDGE
WINNEBAGO COUNTY, ILLINOIS

SCALE: | SHEET NO. OF SHEETS | STA. 83+50.00 TO STA. 85+00.00

F.A.U. RTE.	SECTION	COUNTY	TOTAL SHEETS	SHEET NO.
5103	03-00337-00-BR	WINNEBAGO	66	63

CONTRACT NO. 85523

FED. ROAD DIST. NO. | ILLINOIS | FED. AID PROJECT

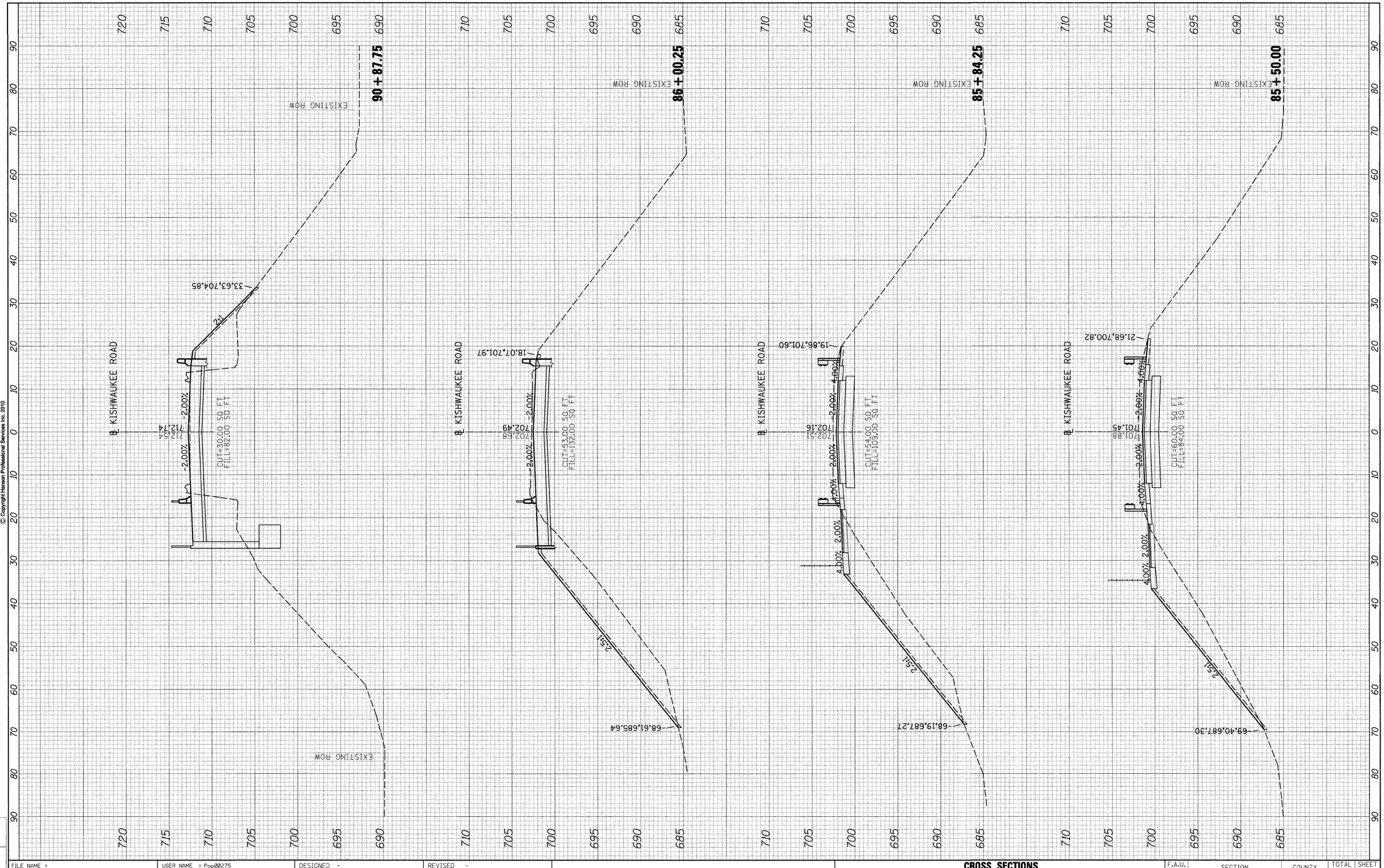

FILE NAME = I:\03_jobs\03R1807\CADD\Road\Sheet\C-301-XS.dgn	USER NAME = Pop00275	DESIGNED -	REVISED -
		DRAWN -	REVISED -
	PLOT SCALE = 10.0000 ' / in.	CHECKED -	REVISED -
	PLOT DATE = 10\27\2010	DATE -	REVISED -

STATE OF ILLINOIS
DEPARTMENT OF TRANSPORTATION

CROSS SECTIONS
KISHWAUKEE RIVER BRIDGE
WINNEBAGO COUNTY, ILLINOIS

SCALE: | SHEET NO. OF SHEETS | STA. 85+50.00 TO STA. 90+87.75

F.A.U. RTE.	SECTION	COUNTY	TOTAL SHEETS	SHEET NO.
5103	03-00337-00-BR	WINNEBAGO	66	64
		CONTRACT NO. 85523		

FED. ROAD DIST. NO. | ILLINOIS | FED. AID PROJECT

FINAL SURVEY	BY	DATE
SURVEYED		
PLOTTED		
TEMPLATE		
AREAS		
AREAS CHECKED		
NOTE BOOK		
NO.		

ORIGINAL SURVEY	BY	DATE
SURVEYED		
PLOTTED		
TEMPLATE		
AREAS		
AREAS CHECKED		
NOTE BOOK		
NO.		

HANSON

© Copyright Hanson Professional Services Inc. 2010

LAYOUT
DRAWN
REVIEWED

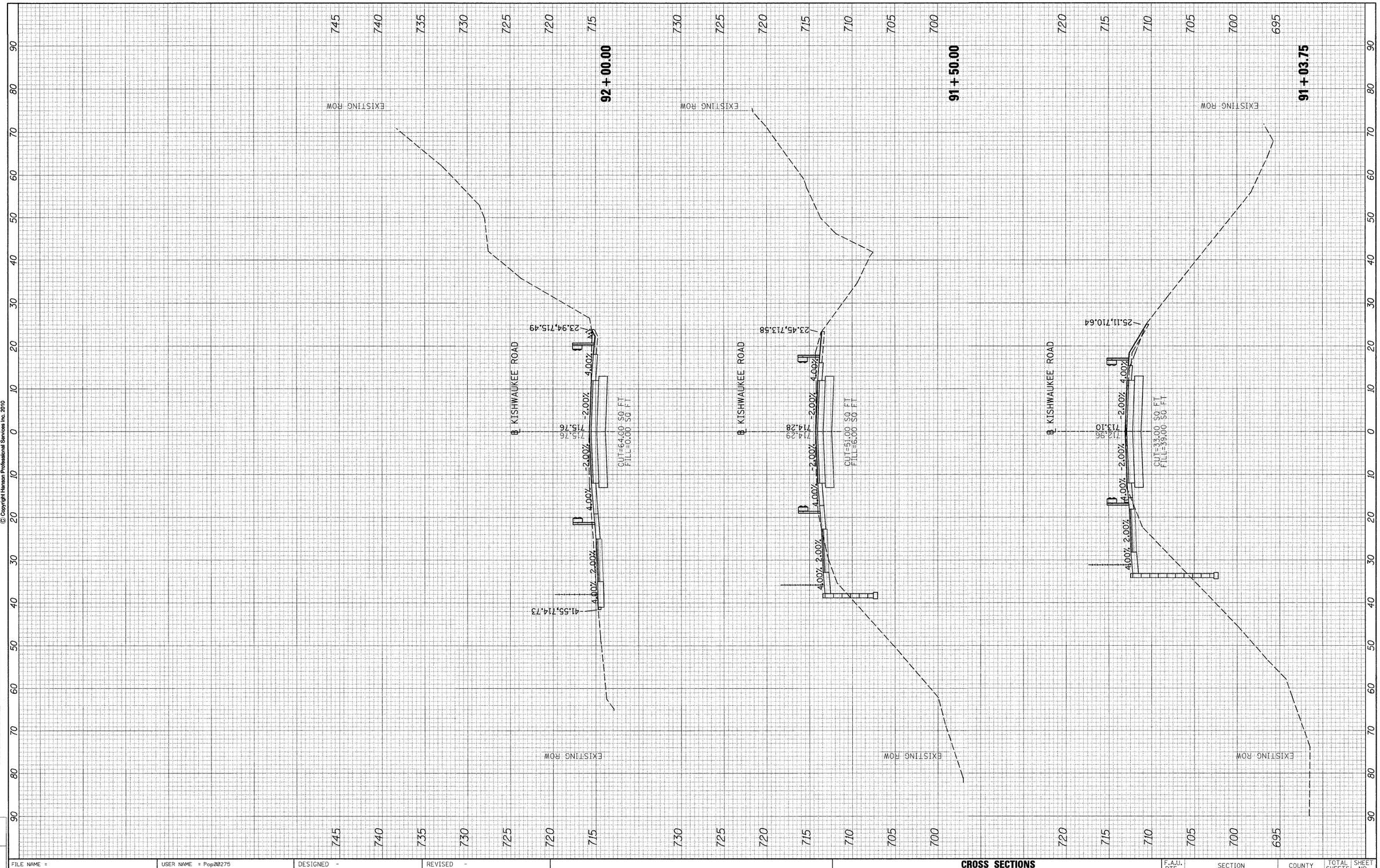

FINAL SURVEY		BY	DATE
NOTE BOOK	SURVEYED		
	PLOTTED		
	TEMPLATE		
	AREAS		
NO.	AREAS CHECKED		

ORIGINAL SURVEY		BY	DATE
NOTE BOOK	SURVEYED		
	PLOTTED		
	TEMPLATE		
	AREAS		
NO.	AREAS CHECKED		

HANSON

© Copyright Hanson Professional Services Inc. 2010

LAYOUT	
DRAWN	
REVIEWED	

FILE NAME = I:\03_jobs\03R1807\CADD\Road\Sheet\C-301-XS.dgn	USER NAME = Pop20275	DESIGNED -	REVISED -
		DRAWN -	REVISED -
	PLOT SCALE = 10.0000 ' / in.	CHECKED -	REVISED -
	PLOT DATE = 10\27\2010	DATE -	REVISED -

STATE OF ILLINOIS
DEPARTMENT OF TRANSPORTATION

CROSS SECTIONS
KISHWAUKEE RIVER BRIDGE
WINNEBAGO COUNTY, ILLINOIS

SCALE: | SHEET NO. OF SHEETS | STA. 91+03.75 TO STA. 92+00.00

F.A.U. RTE.	SECTION	COUNTY	TOTAL SHEETS	SHEET NO.
5103	03-00337-00-BR	WINNEBAGO	66	65
		CONTRACT NO. 85523		

FED. ROAD DIST. NO. | ILLINOIS | FED. AID PROJECT

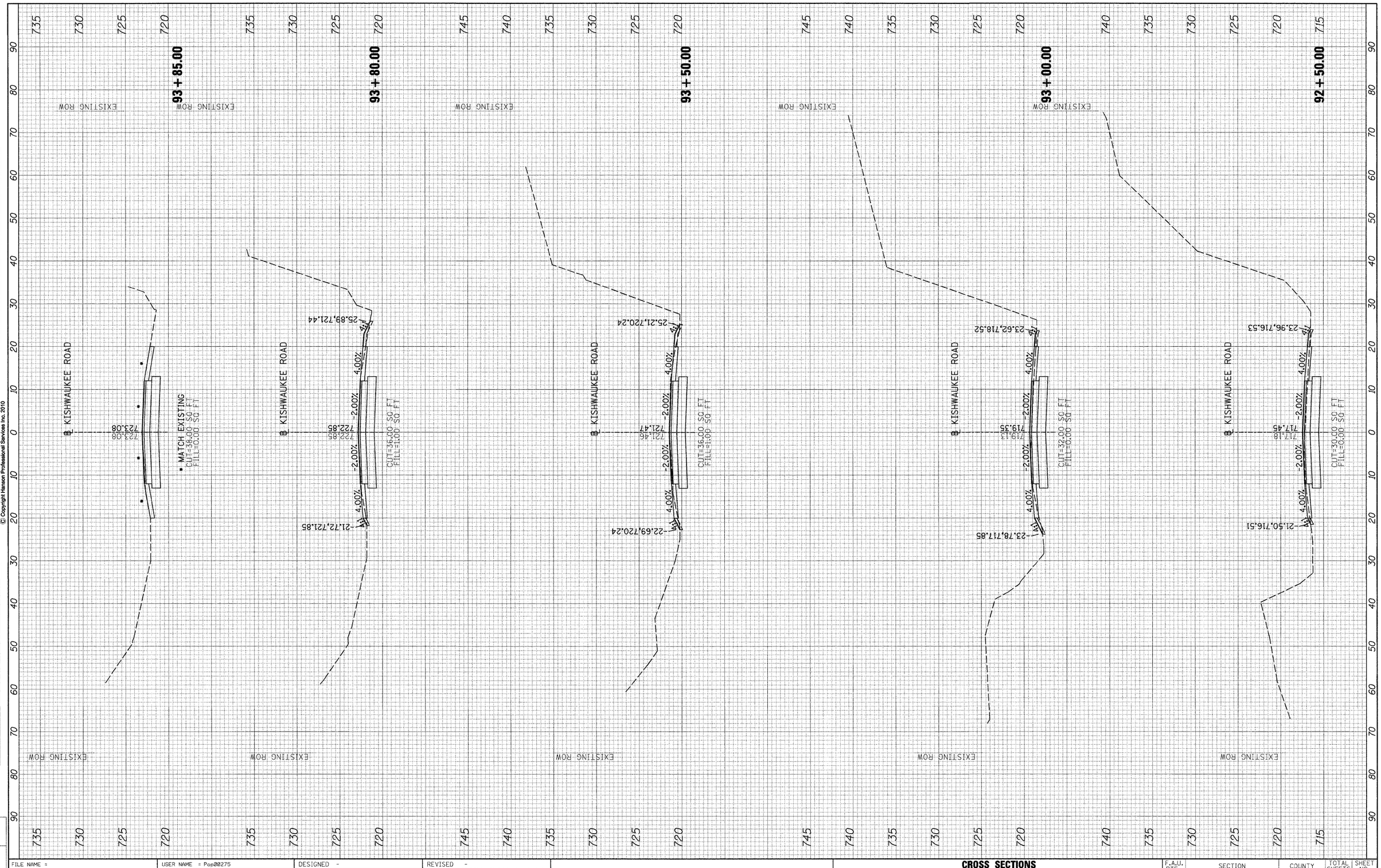

© Copyright Hanson Professional Services Inc. 2010

HANSON

FINAL SURVEY		BY	DATE
NOTE BOOK	SURVEYED		
	PLOTTED		
	TEMPLATE		
	AREAS		
	AREAS CHECKED		
NO.			

ORIGINAL SURVEY		BY	DATE
NOTE BOOK	SURVEYED		
	PLOTTED		
	TEMPLATE		
	AREAS		
	AREAS CHECKED		
NO.			

LAYOUT	
DRAWN	
REVIEWED	

FILE NAME = I:\03_jobs\03R1807\CADD\Road\Sheet\C-301-XS.dgn	USER NAME = Pop00275	DESIGNED -	REVISED -
		DRAWN -	REVISED -
	PLOT SCALE = 10.0000 ' / in.	CHECKED -	REVISED -
	PLOT DATE = 10\27\2010	DATE -	REVISED -

STATE OF ILLINOIS
DEPARTMENT OF TRANSPORTATION

CROSS SECTIONS
KISHWAUKEE RIVER BRIDGE
WINNEBAGO COUNTY, ILLINOIS

SCALE: | SHEET NO. OF SHEETS | STA. 92+50.00 TO STA. 93+85.00

F.A.U. RTE.	SECTION	COUNTY	TOTAL SHEETS	SHEET NO.
5103	03-00337-00-BR	WINNEBAGO	66	66
		CONTRACT NO. 85523		

FED. ROAD DIST. NO. | ILLINOIS | FED. AID PROJECT