F.A. RTE.	SECTION	COUNTY	TOTAL SHEETS	SHEET NO.
	06-00543-00-BT	WINNEBAGO	148	9
FED. ROAD DIST. NO.	ILLINOIS	CONTRACT NO.		85521

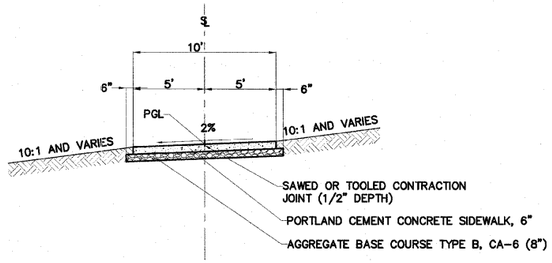

PROPOSED TYPICAL SECTION
STATION 300+00 to 302+27

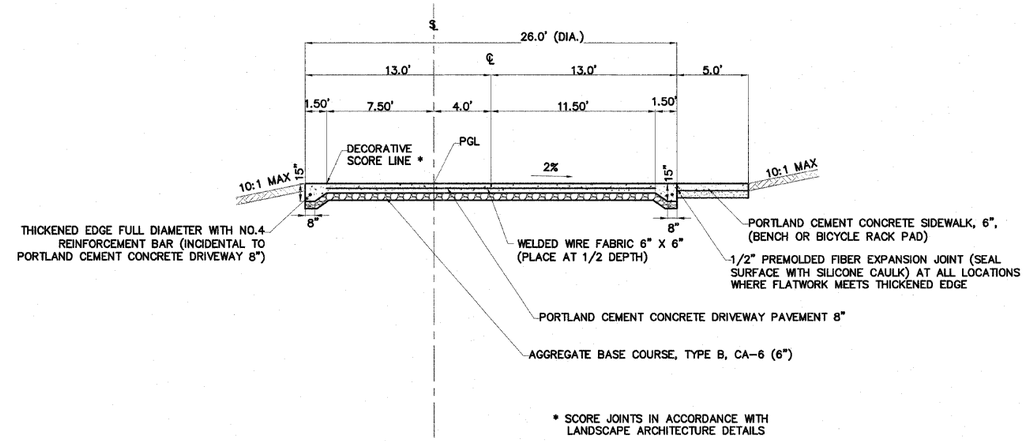

PROPOSED TYPICAL SECTION
STATION 304+04 to 304+30

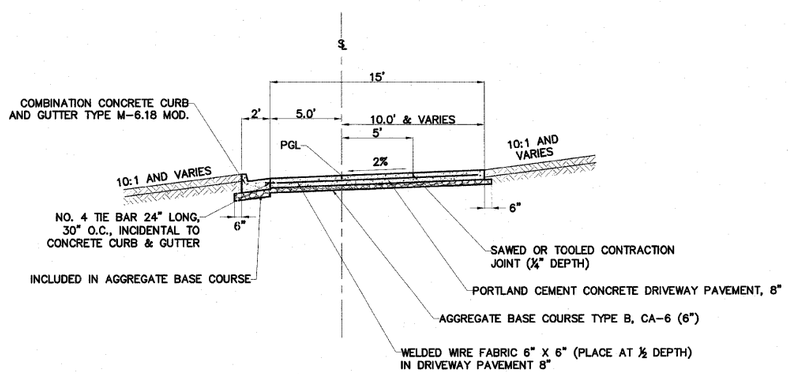

PROPOSED TYPICAL SECTION
STATION 302+27 to 304+04

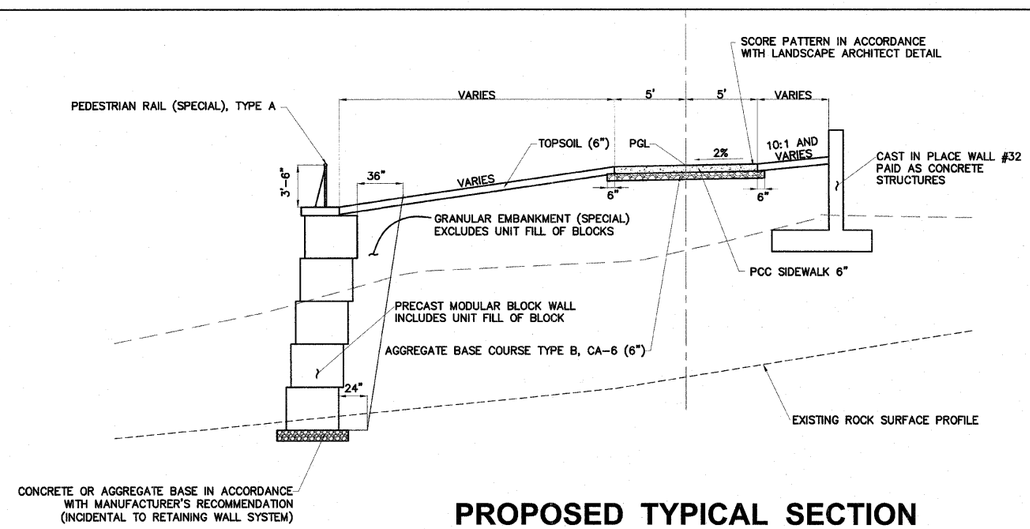

PROPOSED TYPICAL SECTION
STATION 304+30 to 305+10

SHEET REVIEW	
AGENCY	DATE

REVISIONS		
NO.	ITEM	DATE

SCALE:	N/A
DRAWN BY:	MS
CHECKED BY:	JWH
DATE:	AUGUST 13, 2010

McClure Engineering Associates, Inc.
7282 Argus Drive Rockford, Illinois 61107-5837
(815) 398-2332 FAX (815) 398-2496
Design Firm License: Illinois 184-000816

Copyright 2010 By McClure Engineering Associates, Inc.

TYPICAL SECTION
RIVERWALK MUSEUM CAMPUS
711 NORTH MAIN STREET ROCKFORD, IL
FILE:H:\08-008 RIVERWALK MUSEUM\DESIGN\DRAWINGS\08-008 TYPICAL SECTIONS.DWG JOB:04-28-10-008

H:\08-008 Riverwalk Museum\DESIGN\DRAWINGS\08-008 TYPICAL SECTIONS.dwg, TYPSECT-MUSEUM 4, 10/25/2010 3:12:05 PM, MEAL, Oce D+ 24x36 in (Landscape), 1:1