GENERAL NOTES

1. Fasteners shall be AASHTO M164 Type 1, mechanically galvanized bolts. Bolts $\frac{7}{8}$" ϕ, holes $\frac{15}{16}$" ϕ, unless otherwise noted.
2. All structural steel shall be AASHTO M 270 Grade 50.
3. No field welding is permitted except as specified in the contract documents.
4. Reinforcement bars shall conform to the requirements of ASTM A 706 Gr 60. See Special Provisions.
5. Reinforcement bars designated (E) shall be epoxy coated.
6. Prior to pouring the new concrete deck, all heavy or loose rust, loose mill scale, and other loose or potentially detrimental foreign material shall be removed from the surfaces in contact with concrete. Tightly adhered paint may remain unless otherwise noted. Removal shall be accomplished by methods that will not damage the steel and the cost will be included in the pay item covering removal of the existing concrete.
   As directed by the Engineer, existing construction accessories welded to the top flange of beams and girders shall be removed. The weld areas shall be ground flush and inspected for cracks using magnetic particle testing (MT) or dye penetrant testing (PT) by qualified personnel approved by the Engineer. Any cracks that cannot be removed by grinding $\frac{1}{4}$ in. deep shall be identified and reported to the Bureau of Bridges and Structures for further disposition. The cost of removing welded accessories, grinding and inspecting weld areas and grinding cracks will be paid for according to Article 109.04 of the Standard Specifications.
7. Plan dimensions and details relative to existing plans are subject to nominal construction variations. The Contractor shall field verify existing dimensions and details affecting new construction and make necessary approved adjustments prior to construction or ordering of materials. Such variations shall not be cause for additional compensation for a change in scope of the work, however, the Contractor will be paid for the quantity actually furnished at the unit price bid for the work.
8. The existing structural steel coating contains lead. The Contractor shall take appropriate precautions to deal with the presence of lead on this project.
9. The Organic Zinc Rich Primer / Epoxy / Urethane Paint System shall be used for painting of new structural steel except where otherwise noted. The entire system shall be shop applied, with the exception that masked off connection surfaces, field installed fasteners and damaged areas shall be touched up in the field. The color of the final finish coat for all interior steel surfaces shall be Gray, Munsell No. 5B 7/1. The color of the final finish coat for the exterior and bottom flange of the fascia beams shall be blue, Munsell No. 10B 3/6. See Special Provision for "Cleaning and Painting New Metal Structures".
10. Existing structural steel that will be in contact with new structural steel shall be cleaned and painted prior to erection as required by the Special Provision "Cleaning and Painting Contact Surface Areas of Existing Steel Structures."
11. Slipforming of the parapets is not allowed.

INDEX OF SHEETS

SA1 GENERAL PLAN AND ELEVATION
SA2 GENERAL NOTES AND BILL OF MATERIAL
SA3 TOP OF SLAB ELEVATION LOCATIONS
SA4 TOP OF SLAB ELEVATION I
SA5 TOP OF SLAB ELEVATION II
SA6 TOP OF SLAB ELEVATION III
SA7 TOP OF SOUTH APPROACH SLAB ELEVATIONS
SA8 DECK PLAN AND CROSS SECTION - UNIT 1
SA9 DECK PLAN AND CROSS SECTION - UNIT 2
SA10 DECK PLAN AND CROSS SECTION - UNIT 3
SA11 SUPERSTRUCTURE DETAILS - UNIT 1
SA12 SUPERSTRUCTURE DETAILS - UNIT 2
SA13 SUPERSTRUCTURE DETAILS - UNIT 3
SA14 SUPERSTRUCTURE DETAILS I
SA15 SUPERSTRUCTURE DETAILS II
SA16 SOUTH BRIDGE APPROACH SLAB DETAILS I
SA17 SOUTH BRIDGE APPROACH SLAB DETAILS II
SA18 PREFORMED JOINT STRIP SEAL
SA19 DRAINAGE SCUPPER
SA20 STRUCTURAL STEEL REPAIR DETAILS I
SA21 STRUCTURAL STEEL REPAIR DETAILS II
SA22 STRUCTURAL STEEL DETAILS
SA23 ABUTMENT CONCRETE REMOVALS
SA24 NORTH ABUTMENT DETAILS I
SA25 NORTH ABUTMENT DETAILS II
SA26 SOUTH ABUTMENT DETAILS I
SA27 SOUTH ABUTMENT DETAILS II
SA28 BAR SPLICER ASSEMBLY AND MECHANICAL SPLICER DETAILS

TOTAL BILL OF MATERIAL

ITEM	UNIT	SUPER	SUB	TOTAL
Concrete Removal	Cu. Yd.		25.6	25.6
Removal of Existing Concrete Deck No. 1	Each	1		1
Protective Shield	Sq. Yd.	1,705		1,705
Concrete Structures	Cu. Yd.		32.8	32.8
Concrete Superstructure	Cu. Yd.	771.3		771.3
Bridge Deck Grooving	Sq. Yd.	2,365		2,365
Protective Coat	Sq. Yd.	2,930		2,930
Stud Shear Connectors	Each	3,144		3,144
Structural Steel Repair	Pound	20,560		20,560
Reinforcement Bars, Epoxy Coated	Pound	195,700	3,870	199,570
Bar Splicers	Each	35		35
Name Plates	Each	1		1
Preformed Joint Strip Seal	Foot	132		132
Drainage Scuppers (Special)	Each	10		10

CURVE DATA

(℄ I-74 SB On Ramp)
Δ = 2°27'13" (LT)
D = 1°00'00"
R = 5729.58'
T = 122.70'
L = 245.37'
E = 1.31'
SE = Varies
P.C. = Sta. 90+54.63
P.T. = Sta. 93+00.00
P.I. = Sta. 91+77.33

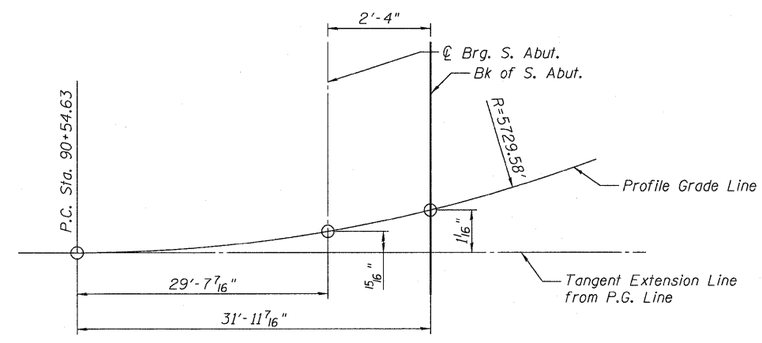

OFFSET SKETCH

FILE NAME = 0810115-64D95-SA02-GN.dgn	USER NAME = JACOBS	DESIGNED - KEB	REVISED -
JACOBS		CHECKED - MBQ	REVISED -
	PLOT SCALE =	DRAWN - KEB	REVISED -
	PLOT DATE = 10/28/2010	CHECKED - MBQ	REVISED -

STATE OF ILLINOIS
DEPARTMENT OF TRANSPORTATION

GENERAL NOTES AND BILL OF MATERIAL
STRUCTURE NO. 081-0115
SHEET NO. SA2 OF SA28 SHEETS

F.A.I RTE.	SECTION	COUNTY	TOTAL SHEETS	SHEET NO.
74	(81-1HB)D	ROCK ISLAND	78	20
		CONTRACT NO. 64D95		
	ILLINOIS	FED. AID PROJECT		