STATE OF ILLINOIS
DEPARTMENT OF TRANSPORTATION

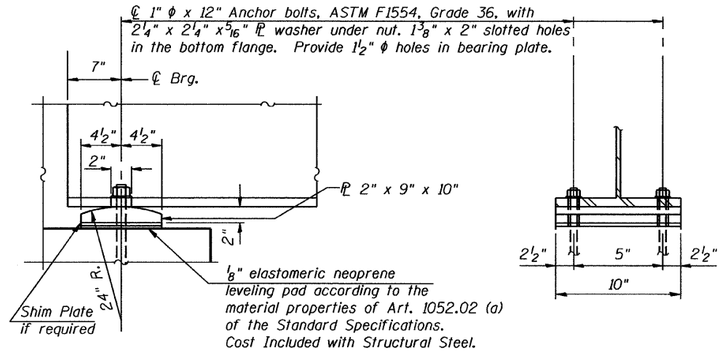


FIXED BEARING AT ABUTMENT

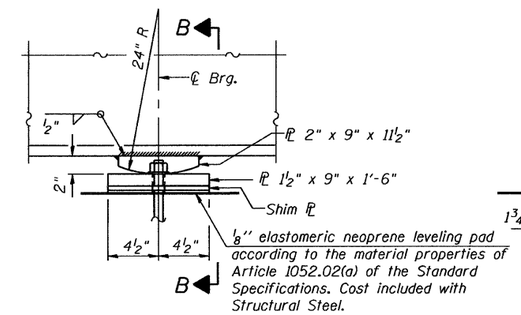


ELEVATION AT PIER

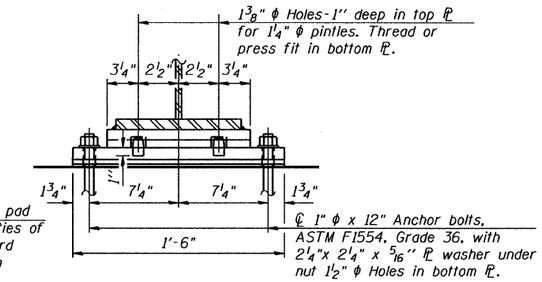


SECTION B-B

FIXED BEARING AT PIERS

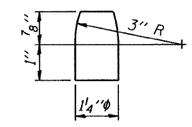


PINTLE

## NOTES:

1. Anchor bolts shall be ASTM F1554 all-thread (or an Engineer-approved alternate material) of the grade(s) and diameter(s) specified. ASTM A307 Grade C anchor bolts may be used in lieu of ASTM F1554 Grade 36 (Fy=36ksi). The corresponding specified grade of AASHTO M314 anchor bolts may be used in lieu of ASTM F1554.
2. Anchor bolts at fixed bearings may be either cast in place or installed in holes drilled after the supported member is in place.
3. Drilled and set anchor bolts shall be installed according to Article 521.06 of the Standard Specifications.
4. The structural steel plates of the Bearing Assembly shall conform to the requirements of AASHTO M 270 Grade 50W.
5. Two ⅛ in. adjusting shims shall be provided for each bearing in addition to all other plates or shims and placed as shown on bearing details.

## BILL OF MATERIAL

| Item | Unit | Total |
|---|---|---|
| Anchor Bolts, 1" | Each | 48 |

| | |
|---|---|
| DESIGNED | J.Z. |
| CHECKED | J.A.Z. |
| DRAWN | R.B.H. |
| CHECKED | J.A.Z. |

GRAEF 8501 W. Higgins Road; Suite 280 Chicago, Illinois 60631 (773) 399-0112

BEARINGS

Illinois Rte. 84 Over Apple River Tributary

STATION 165+50.00 STRUCTURE NO. 043-0078

| SHEET NO. | F.A.P. RTE. | SECTION | COUNTY | TOTAL SHEETS | SHEET NO. |
|---|---|---|---|---|---|
| SA16 OF 25 SHEETS | 308 | 104BR-1 | JO DAVIESS | 126 | 52 |
| | | | CONTRACT NO. 64B26 | | |
| | 10-15-2010 | ILLINOIS | FED. AID PROJECT | | |

h:\jobs2010\2010301\cad\structural\dgn\00\SA16_BEARINGS.dgn
10/13/2010