STATE OF ILLINOIS
DEPARTMENT OF TRANSPORTATION

Notes:
See sheet 18 of 54 for Detail A and View B-B.
Approach slab and parapet concrete shall be paid for as Concrete Superstructure.
Approach footing concrete shall be paid for as Concrete Structures.
Reinforcement shall be paid for as Reinforcement Bars, Epoxy Coated.
For v_{400}(E) bar details, see sheet 14 of 54.
The approach footing maximum applied service bearing pressure (Qmax) = 2.0 ksf.
For bar splicer details, see sheet 48 of 54.
Cost of excavation for approach footing included with Concrete Structures.
For Porous Granular Embankment (Special) and drainage treatment details, see sheet 36 of 54.
For additional parapet details, see sheet 14 of 54.

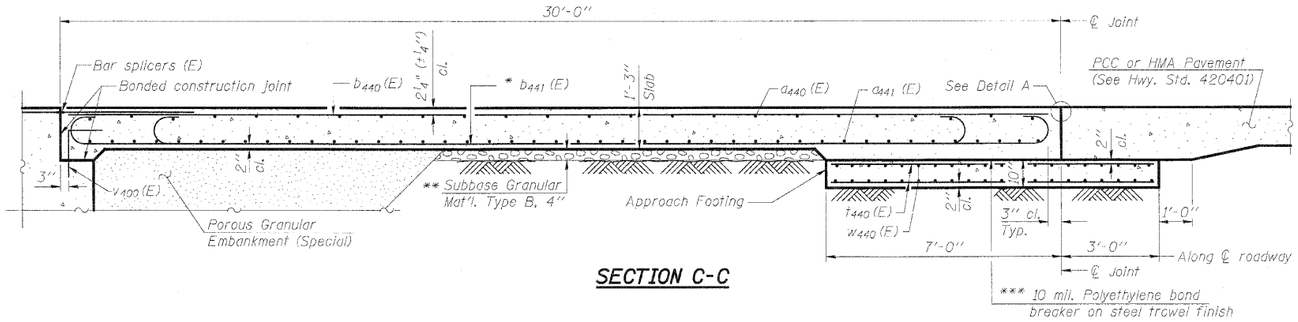

SECTION C-C

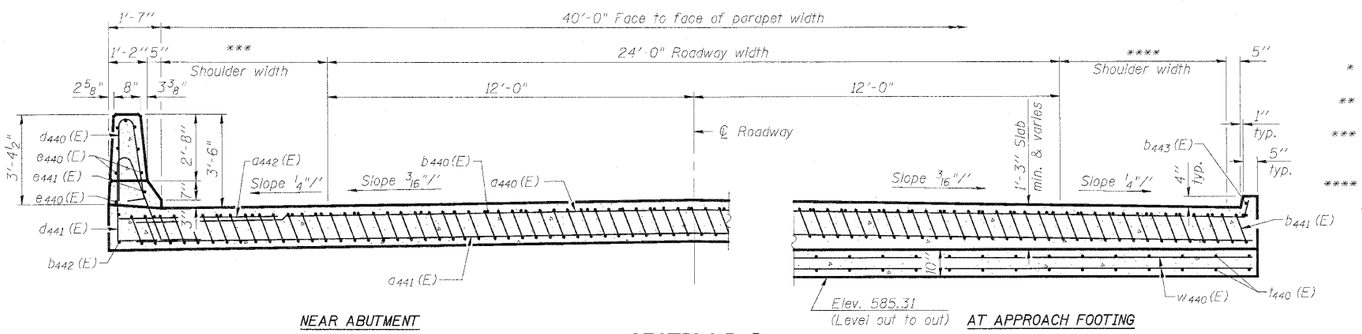

NEAR ABUTMENT

AT APPROACH FOOTING

SECTION D-D
(See Plan for dimensions not shown)

* Tilt #9 b_{441}(E) bars as required to maintain clearance.

** Cost included with Concrete Superstructure.

*** 10'-0" - W.B. Roadway
6'-0" - E.B. Roadway

**** 6'-0" - W.B. Roadway
10'-0" - E.B. Roadway

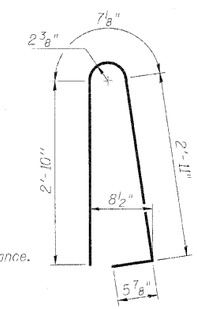

BAR d_{440}(E)

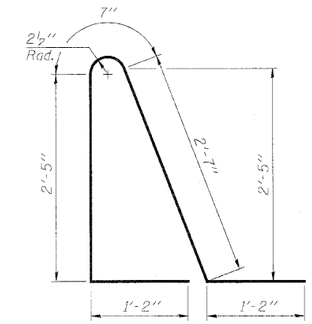

BAR d_{441}(E)

TWO APPROACHES
BILL OF MATERIAL

Bar	No.	Size	Length	Shape
a_{440}(E)	100	#4	22'-7"	
a_{441}(E)	92	#5	41'-6"	
a_{442}(E)	48	#6	6'-6"	
b_{440}(E)	68	#4	29' 8"	
b_{441}(E)	202	#9	29'-9"	
b_{442}(E)	4	#4	14'-8"	
b_{443}(E)	4	#4	14'-8"	
d_{440}(E)	68	#5	6'-10"	
d_{441}(E)	68	#5	7'-11"	
e_{440}(E)	32	#4	14'-8"	
e_{441}(E)	4	#8	14'-8"	
t_{440}(E)	172	#4	9'-8"	
w_{440}(E)	80	#5	41'-6"	
Concrete Superstructure			Cu. Yd.	130.4
Concrete Structures			Cu. Yd.	25.7
Bridge Deck Grooving			Sq. Yd.	253
Protective Coat			Sq. Yd.	302
Reinforcement Bars, Epoxy Coated			Pound	33,900

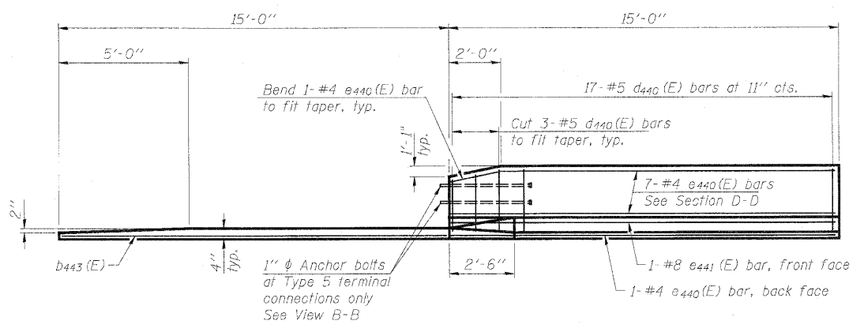

VIEW E-E

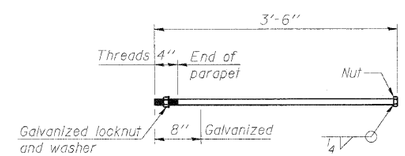

1"ϕ ANCHOR BOLT
(Cost included with Concrete Superstructure)

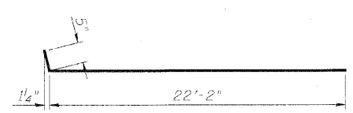

BAR a_{440}(E)

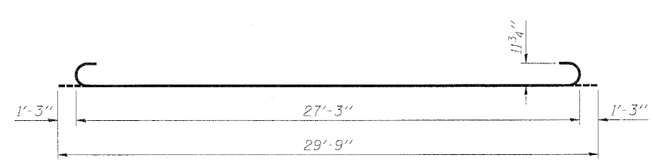

BAR b_{441}(E)

(Sheet 2 of 2)
BRIDGE EAST APPROACH SLAB DETAILS
STRUCTURE NO. 081-0022 (E.B.)
STRUCTURE NO. 081-0023 (W.B.)

DESIGNED	ASJ
CHECKED	SPK
DRAWN	ASJ
CHECKED	SPK

INFRASTRUCTURE ENGINEERING | INCORPORATED
33 West Monroe | Suite 1540 | Chicago, IL 60603
P 312.425.9560 | F 312.425.9564 | www.infrastructure-eng.com

SHEET NO. 19	F.A.I. RTE.	SECTION	COUNTY	TOTAL SHEETS	SHEET NO.
54 SHEETS	280	81-1(HB-2)R	ROCK ISLAND	503	301
			CONTRACT NO. 64815		
	FED. ROAD DIST. NO. _	ILLINOIS	FED. AID PROJECT		

STATE OF ILLINOIS
DEPARTMENT OF TRANSPORTATION

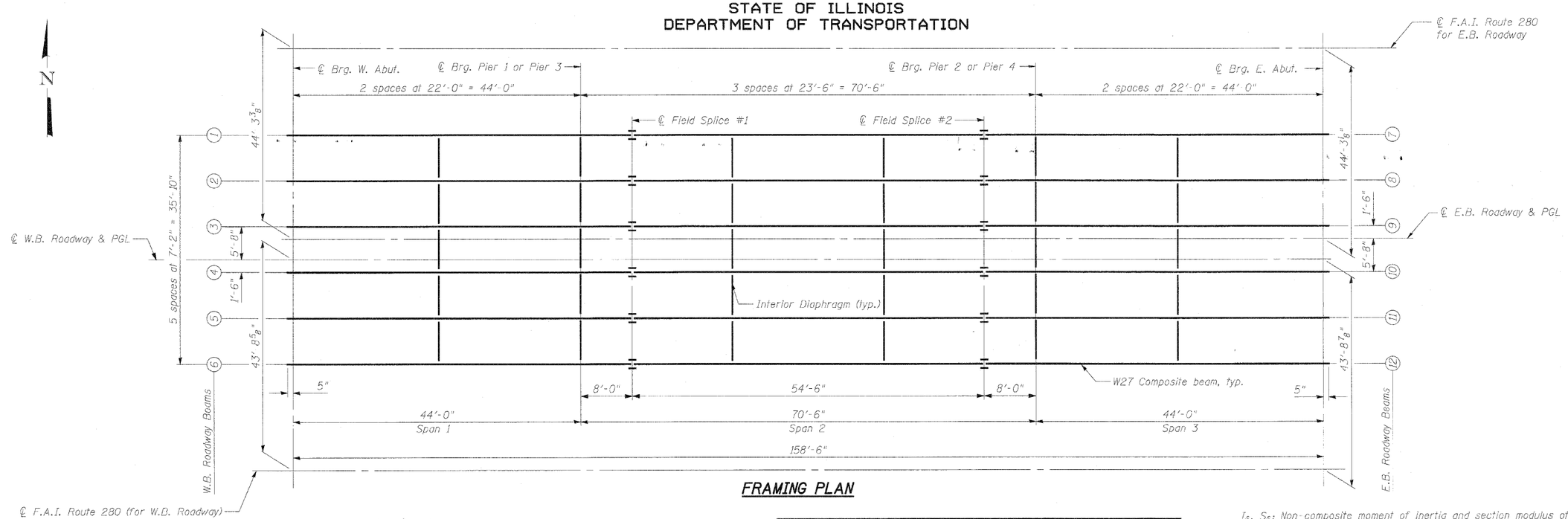

FRAMING PLAN

Note:
All diaphragms shall be installed as steel is erected and secured with erection pins and bolts except as otherwise noted. Individual diaphragms at supports may be temporarily disconnected to install bearing anchor rods.

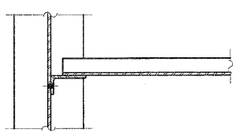

SECTION A-A

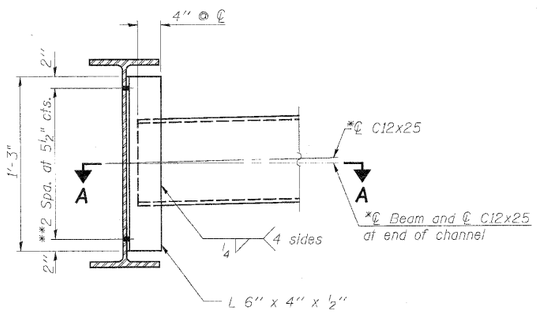

INTERIOR DIAPHRAGM

Note:
Two hardened washers required for each set of oversized holes.
*Alternate channel C12x30 is permitted to facilitate material acquisition. Calculated weight of structural steel is based on the lighter section. The alternate, if utilized, shall be provided at no additional cost to the Department.
**3/4" ϕ HS bolts, 15/16" ϕ holes

INTERIOR BEAM MOMENT TABLE				
		0.4 Sp. 1 or 0.6 Sp. 3	Pier	0.5 Sp. 2
I_s	(in^4)	4,760	4,760	4,760
$I_c(n)$	(in^4)	13,182	-	13,182
$I_c(3n)$	(in^4)	9,719	-	9,719
S_s	(in^3)	345	345	345
$S_c(n)$	(in^3)	513	-	513
$S_c(3n)$	(in^3)	463	-	463
w_D	(k/')	0.867	1.408	0.867
M_{D}	('k)	77	479	226
w_{SD}	(k/')	0.541	-	0.541
M_{SD}	('k)	59	-	169
M_{LL}	('k)	288	223	448
M_I	('k)	86	61	115
$5/3\,[M_{LL} + I]$	('k)	623	473	938
M_a	('k)	987	1,238	1,733
*** M_u	('k)	2,214	-	2,522
f_s M_{D} non-comp	(ksi)	2.7	16.7	7.9
f_s M_{D} (comp)	(ksi)	1.5	-	4.4
f_s $5/3\,[M_{LL} + M_I]$	(ksi)	14.6	16.5	21.9
f_s (Overload)	(ksi)	18.8	33.2	34.2
**** f_s (Total)	(ksi)	-	43.2	-
VR	(k)	59.2	-	48.4

*** Compact section
**** Braced non-compact and partially braced section

INTERIOR BEAM REACTION TABLE			
		Abut.	Pier
R_{D}	(k)	56.7	91.5
R_{LL}	(k)	42.5	49.6
R_I	(k)	10.8	10.4
R_{Total}	(k)	110.0	151.5

Note:
The interior beam reaction at the abutment includes dead and live loads from both the superstructure and the approach slab.

I_s, S_s: Non-composite moment of inertia and section modulus of the steel section used for computing f_s(Total and Overload) due to non-composite dead loads ($in.^4$ and $in.^3$).
$I_c(n)$, $S_c(n)$: Composite moment of inertia and section modulus of the steel and deck based upon the modular ratio, "n", used for computing f_s(Total and Overload) due to short-term composite live loads ($in.^4$ and $in.^3$).
$I_c(3n)$, $S_c(3n)$: Composite moment of inertia and section modulus of the steel and deck based upon 3 times the modular ratio, "3n", used for computing f_s(Total and Overload) due to long-term composite (superimposed) dead loads ($in.^4$ and $in.^3$).
w_D: Un-factored non-composite dead load (kips/ft.).
M_D: Un-factored moment due to non-composite dead load (kip-ft.).
w_{SD}: Un-factored long-term composite (superimposed) dead load (kips/ft.)
M_{SD}: Un-factored moment due to long-term composite (superimposed) dead load (kip-ft.).
M_{LL}: Un-factored live load moment (kip-ft.).
M_I: Un-factored moment due to impact (kip-ft.).
M_a: Factored design moment (kip-ft.).
$1.3\,[M_D + M_{SD} + \frac{5}{3}(M_{LL} + M_I)]$
M_u: Compact composite moment capacity according to AASHTO LFD 10.50.1.1 or compact non-composite moment capacity according to AASHTO LFD 10.48.1 (kip-ft.).
f_s (Overload): Sum of stresses as computed from the moments below (ksi).
$M_D + M_{SD} + \frac{5}{3}(M_{LL} + M_I)$
f_s (Total): Sum of stresses as computed from the moments below on non-compact section (ksi).
$1.3\,[M_D + M_{SD} + \frac{5}{3}(M_{LL} + M_I)]$
VR: Maximum V_{LL} + impact horizontal shear range within the composite portion of the span for stud shear connector design (kips).

FRAMING PLAN
STRUCTURE NO. 081-0022 (E.B.)
STRUCTURE NO. 081-0023 (W.B.)

DESIGNED	SST
CHECKED	SPK
DRAWN	ASJ
CHECKED	SPK

INFRASTRUCTURE ENGINEERING | INCORPORATED
33 West Monroe | Suite 1540 | Chicago, IL 60603
P 312.425.9560 | F 312.425.9564 | www.infrastructure-eng.com

SHEET NO. 20	F.A.I. RTE.	SECTION	COUNTY	TOTAL SHEETS	SHEET NO.
54 SHEETS	280	81-1(HB-2)R	ROCK ISLAND	503	302
			CONTRACT NO. 64815		
	FED. ROAD DIST. NO. _	ILLINOIS	FED. AID PROJECT		

STATE OF ILLINOIS
DEPARTMENT OF TRANSPORTATION

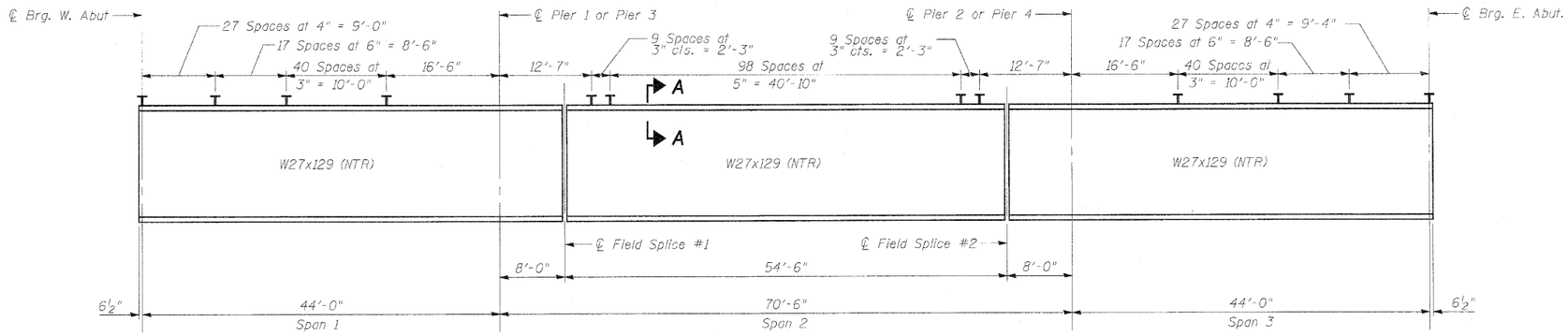

BEAM ELEVATION

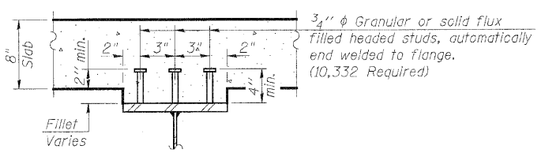

SECTION A-A

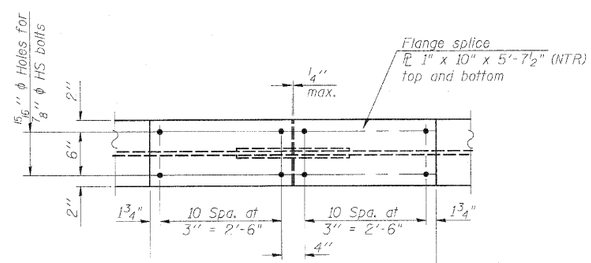

PLAN

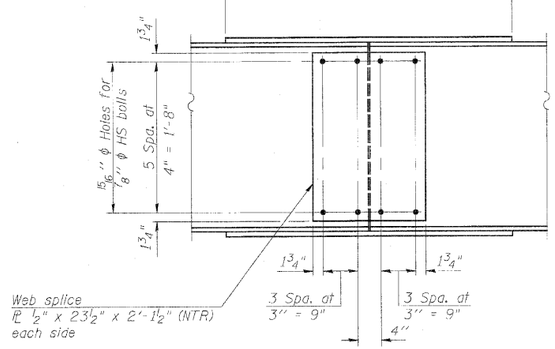

ELEVATION

FIELD SPLICE DETAIL
(24 Required)

TOP OF BEAM ELEVATIONS
(For Fabrication Use Only)

Beam No.	℄ Brg. W. Abut.	℄ Pier 1 or Pier 3	℄ Field Splice #1	℄ Field Splice #2	℄ Pier 2 or Pier 4	℄ Brg. E. Abut.
1	584.28	584.83	584.93	585.69	585.82	586.50
2	584.43	584.98	585.08	585.84	585.97	586.65
3	584.55	585.10	585.20	585.96	586.09	586.77
4	584.62	585.16	585.26	586.03	586.15	586.83
5	584.51	585.05	585.15	585.91	586.04	586.72
6	584.37	584.92	585.02	585.78	585.90	586.59
7	584.37	584.92	585.02	585.78	585.90	586.59
8	584.51	585.05	585.15	585.91	586.04	586.72
9	584.62	585.16	585.26	586.03	586.15	586.83
10	584.55	585.10	585.20	585.96	586.09	586.77
11	584.43	584.98	585.08	585.84	585.97	586.65
12	584.28	584.83	584.93	585.69	585.82	586.50

Notes:
All material on this sheet to be AASHTO M270 Grade 50 unless otherwise noted.
Load carrying components designated "NTR" shall conform to the Supplemental Requirement for Notch Toughness, Zone 2.

STEEL BEAM DETAILS
STRUCTURE NO. 081-0022 (E.B.)
STRUCTURE NO. 081-0023 (W.B.)

DESIGNED	SST
CHECKED	SPK
DRAWN	ASJ
CHECKED	SPK

INFRASTRUCTURE ENGINEERING | INCORPORATED
33 West Monroe | Suite 1540 | Chicago, IL 60603
P 312.425.9560 | F 312.425.9564 | www.infrastructure-eng.com

SHEET NO. 21	F.A.I. RTE.	SECTION	COUNTY	TOTAL SHEETS	SHEET NO.
54 SHEETS	280	81-1(HB-2)R	ROCK ISLAND	503	303
			CONTRACT NO. 64815		
	FED. ROAD DIST. NO. _	ILLINOIS	FED. AID PROJECT		

STATE OF ILLINOIS
DEPARTMENT OF TRANSPORTATION

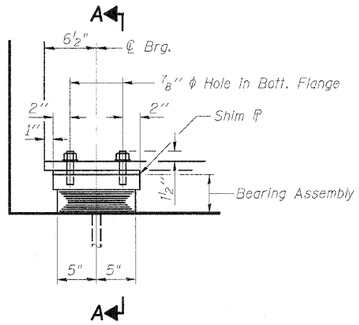

ELEVATION AT ABUTMENTS

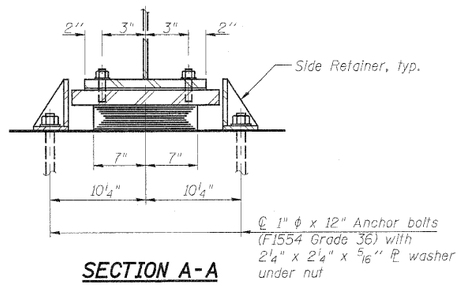

SECTION A-A

TYPE I ELASTOMERIC EXP. BRG.

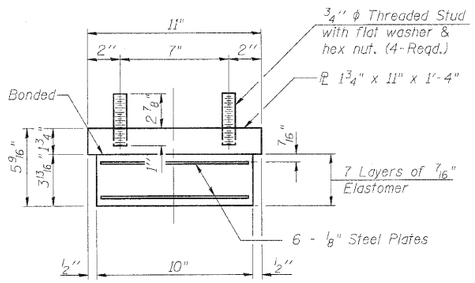

BEARING ASSEMBLY

Note:
Shim plates shall not be placed under Bearing Assembly.

Notes:

Anchor bolts shall be ASTM F1554 all-thread (or an Engineer-approved alternate material) of the grade(s) and diameter(s) specified. ASTM A307 Grade C anchor bolts may be used in lieu of ASTM F1554 Grade 36 (Fy=36ksi). The corresponding specified grade of AASHTO M314 anchor bolts may be used in lieu of ASTM F1554.

Anchor bolts for side retainers may be cast in place or installed in holes drilled before or after members are in place.

Drilled and set anchor bolts shall be installed according to Article 521.06 of the Standard Specifications.

Side retainers and other steel members required for the bearing assembly shall be included in the cost of Elastomeric Bearing Assembly, Type I.

The structural steel plates of the Bearing Assembly shall conform to the requirements of AASHTO M270 Grade 50.

Two ⅛" adjusting shims shall be provided for each bearing in addition to all other plates or shims and placed as shown on bearing details.

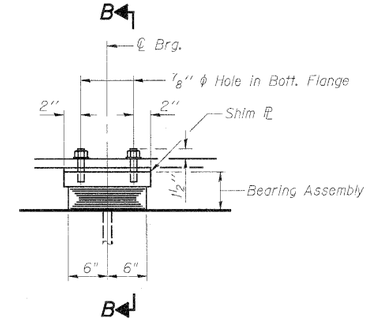

ELEVATION AT PIER 2 AND PIER 4

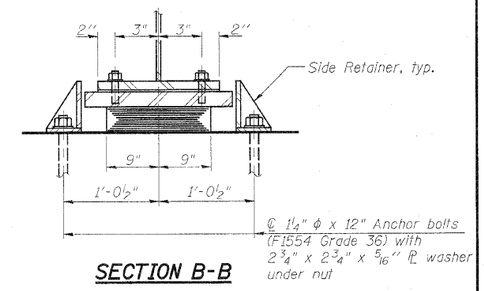

SECTION B-B

TYPE I ELASTOMERIC EXP. BRG.

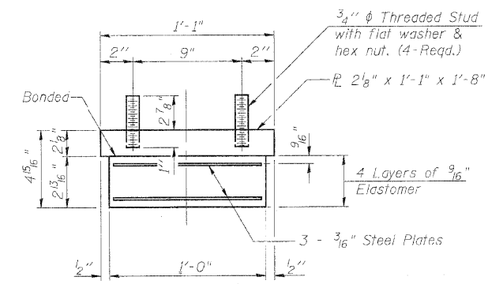

BEARING ASSEMBLY

Note:
Shim plates shall not be placed under Bearing Assembly.

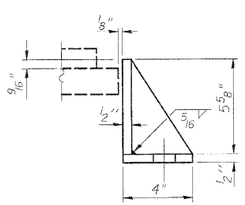

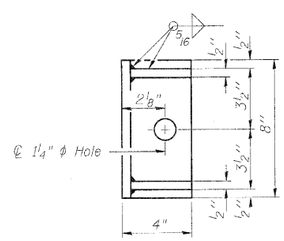

SIDE RETAINER AT ABUTMENTS

Equivalent rolled angle with stiffeners will be allowed in lieu of welded plates.

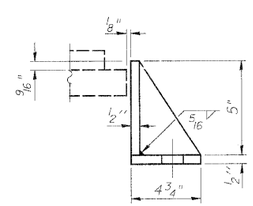

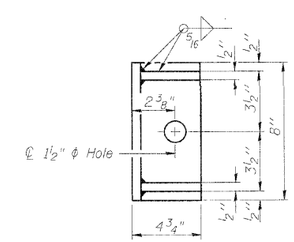

SIDE RETAINER AT PIER 2 & PIER 4

Equivalent rolled angle with stiffeners will be allowed in lieu of welded plates.

BILL OF MATERIAL

Item	Unit	Total
Elastomeric Bearing Assembly Type I	Each	36
Anchor Bolts 1"	Each	48
Anchor Bolts 1¼"	Each	24

BEARINGS - ABUTMENTS, PIER 2 & PIER 4
STRUCTURE NO. 081-0022 (E.B.)
STRUCTURE NO. 081-0023 (W.B.)

DESIGNED	SST
CHECKED	SPK
DRAWN	ASJ
CHECKED	SPK

INFRASTRUCTURE ENGINEERING | INCORPORATED
33 West Monroe | Suite 1540 | Chicago, IL 60603
P 312.425.9560 | F 312.425.9564 | www.infrastructure-eng.com

SHEET NO. 22	F.A.I. RTE.	SECTION	COUNTY	TOTAL SHEETS	SHEET NO.
54 SHEETS	280	81-1(HB-2)R	ROCK ISLAND	503	304
			CONTRACT NO. 64815		
	FED. ROAD DIST. NO. _	ILLINOIS	FED. AID PROJECT		

STATE OF ILLINOIS
DEPARTMENT OF TRANSPORTATION

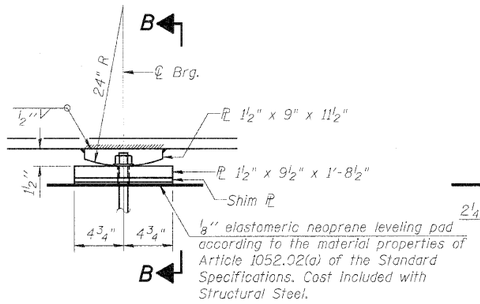

ELEVATION AT PIER 1 AND PIER 3

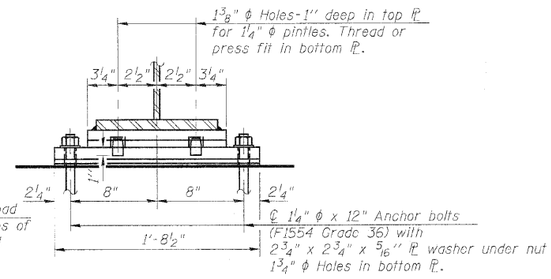

SECTION B-B

FIXED BEARING

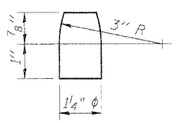

PINTLE

Notes:

Anchor bolts shall be ASTM F1554 all-thread (or an Engineer-approved alternate material) of the grade(s) and diameter(s) specified. ASTM A307 Grade C anchor bolts may be used in lieu of ASTM F1554 Grade 36 (Fy=36ksi). The corresponding specified grade of AASHTO M314 anchor bolts may be used in lieu of ASTM F1554.

Anchor bolts at fixed bearings may be either cast in place or installed in holes drilled after the supported member is in place.

Drilled and set anchor bolts shall be installed according to Article 521.06 of the Standard Specifications.

The structural steel plates of the Bearing Assembly shall conform to the requirements of AASHTO M270 Grade 50.

Two ½" adjusting shims shall be provided for each bearing in addition to all other plates or shims and placed as shown on bearing details.

BILL OF MATERIAL

Item	Unit	Total
Anchor Bolts 1¼"	Each	24

BEARINGS - PIER 1 & PIER 3
STRUCTURE NO. 081-0022 (E.B.)
STRUCTURE NO. 081-0023 (W.B.)

DESIGNED	SST
CHECKED	SPK
DRAWN	ASJ
CHECKED	SPK

INFRASTRUCTURE ENGINEERING | INCORPORATED
33 West Monroe | Suite 1540 | Chicago, IL 60603
P 312.425.9560 | F 312.425.9554 | www.infrastructure-eng.com

SHEET NO. 23	F.A.I. RTE.	SECTION	COUNTY	TOTAL SHEETS	SHEET NO.
54 SHEETS	280	81-1(HB-2)R	ROCK ISLAND	503	305
			CONTRACT NO. 64815		
	FED. ROAD DIST. NO. _	ILLINOIS	FED. AID PROJECT		

STATE OF ILLINOIS
DEPARTMENT OF TRANSPORTATION

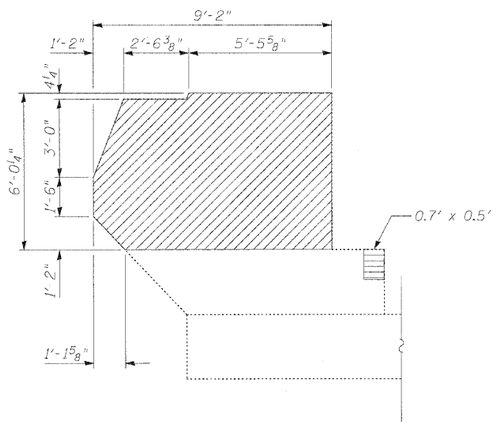

SOUTH WINGWALL ELEVATION

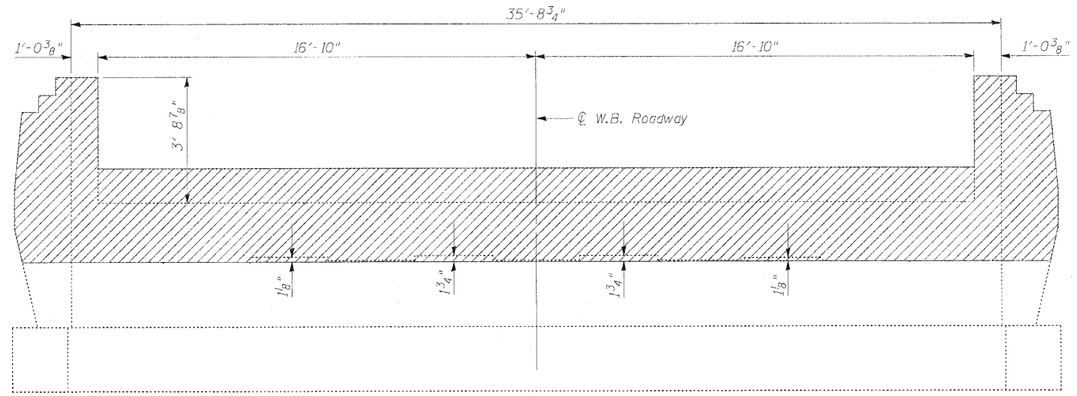

ELEVATION

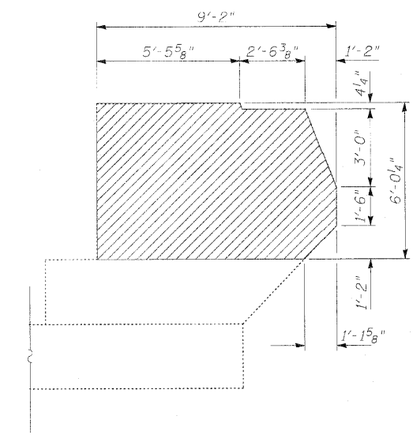

NORTH WINGWALL ELEVATION

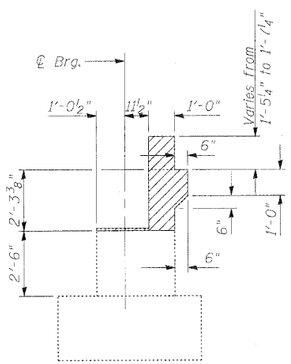

SECTION A-A

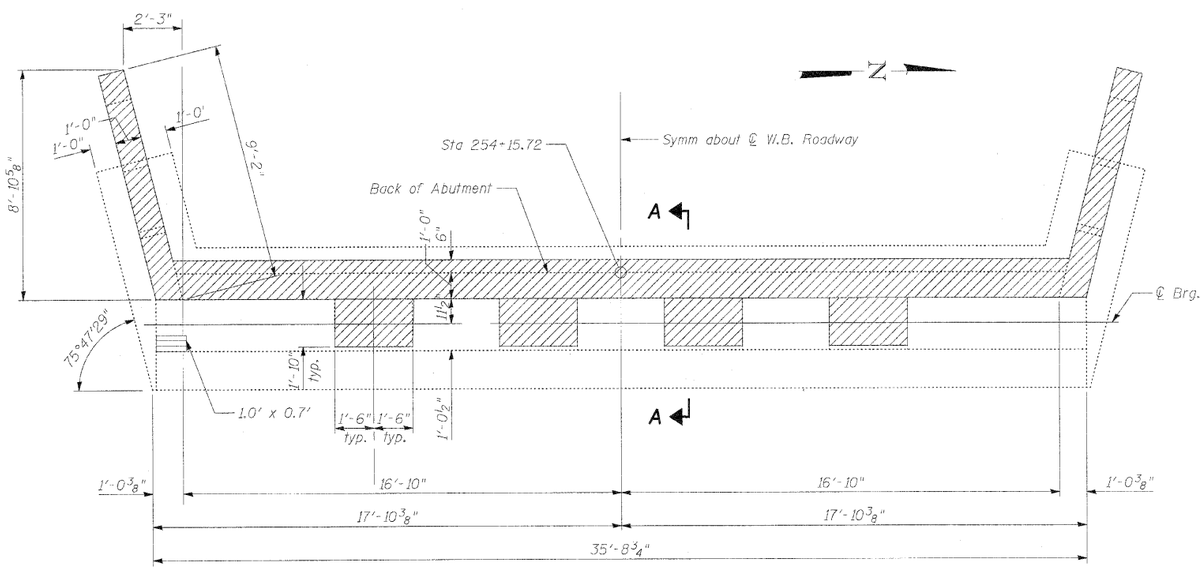

PLAN

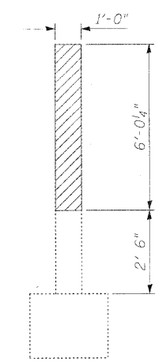

SECTION THRU WINGWALL

BILL OF MATERIAL

ITEM	UNIT	QUANTITY
Concrete Removal	Cu. Yd.	9.3
Structural Repair of Concrete (Depth Equal to or Less Than 5 Inches)	Sq. Ft.	1

Notes:
Existing reinforcement bars that project from the abutment after concrete removal shall be cut flush with the concrete left in place. Cost included with Concrete Removal.
Repair of the existing abutment shall include but not be limited to the areas shown. The actual areas to be repaired will be determined by the Engineer at the time of construction.

Indicates limits of Concrete Removal

Indicates limits of Structural Repair of Concrete (Depth Equal to or Less Than 5 Inches)

DESIGNED	SST
CHECKED	SPK
DRAWN	ASJ
CHECKED	SPK

INFRASTRUCTURE ENGINEERING | INCORPORATED
33 West Monroe | Suite 1540 | Chicago, IL 60603
P 312.425.9560 | F 312.425.9564 | www.infrastructure-eng.com

W.B. ROADWAY WEST ABUTMENT
CONCRETE REMOVAL & REPAIRS
STRUCTURE NO. 081-0022 (E.B.)
STRUCTURE NO. 081-0023 (W.B.)

SHEET NO. 24	F.A.I. RTE.	SECTION	COUNTY	TOTAL SHEETS	SHEET NO.
54 SHEETS	280	81-1(HB-2)R	ROCK ISLAND	503	306
			CONTRACT NO. 64815		
	FED. ROAD DIST. NO. _	ILLINOIS	FED. AID PROJECT		

STATE OF ILLINOIS
DEPARTMENT OF TRANSPORTATION

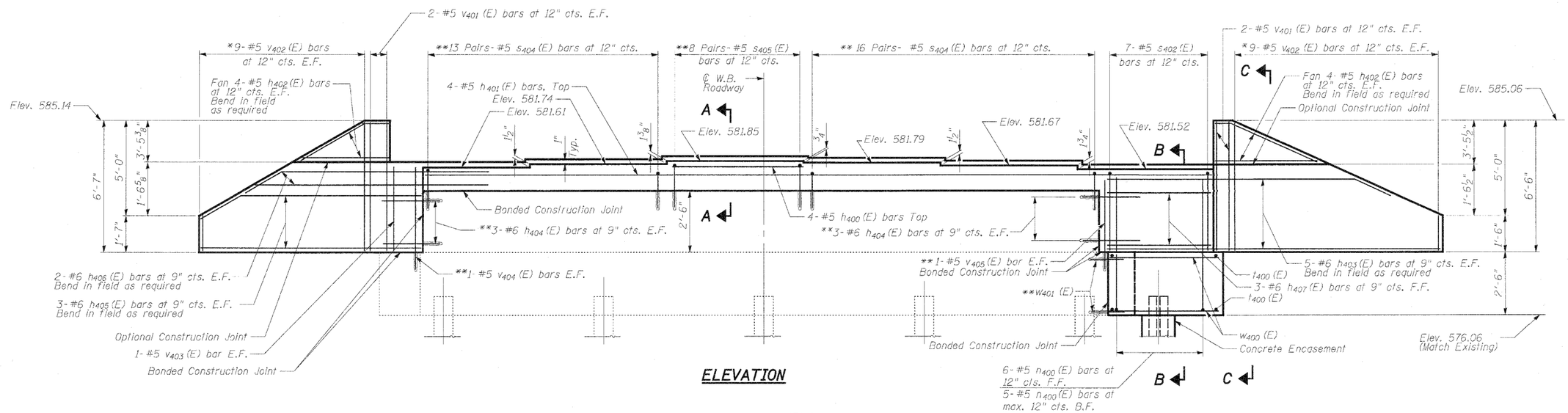

ELEVATION

PLAN

Notes:
See Sheet 26 of 54 for Footing Plan, Sections A-A, B-B, C-C and Bill of Material.
Space reinforcement in cap to miss anchor bolts.
For details of piles, see sheet 47 of 54.
Pour steps monolithically with cap.
*See Field Cutting Diagram on sheet 26 of 54.
**Epoxy grout h_{404}(E), s_{404}(E), s_{405}(E), v_{404}(E), and w_{401}(E) bars in 9" (min.) drilled holes. See Section 584 of the Standard Specifications. Cost of hole drilling and epoxy grouting is included with Reinforcement Bars, Epoxy Coated.

B.F. = Back Face
E.F. = Each Face
F.F. = Front Face

W.B. ROADWAY WEST ABUTMENT WIDENING
STRUCTURE NO. 081-0022 (E.B.)
STRUCTURE NO. 081-0023 (W.B.)

DESIGNED	SST
CHECKED	-
DRAWN	ASJ
CHECKED	SPK

INFRASTRUCTURE ENGINEERING | INCORPORATED
33 West Monroe | Suite 1540 | Chicago, IL 60603
P 312.425.9560 | F 312.425.9564 | www.infrastructure-eng.com

SHEET NO. 25	F.A.I. RTE.	SECTION	COUNTY	TOTAL SHEETS	SHEET NO.
54 SHEETS	280	81-1(HB-2)R	ROCK ISLAND	503	307
			CONTRACT NO. 64815		
	FED. ROAD DIST. NO. _	ILLINOIS	FED. AID PROJECT		

STATE OF ILLINOIS
DEPARTMENT OF TRANSPORTATION

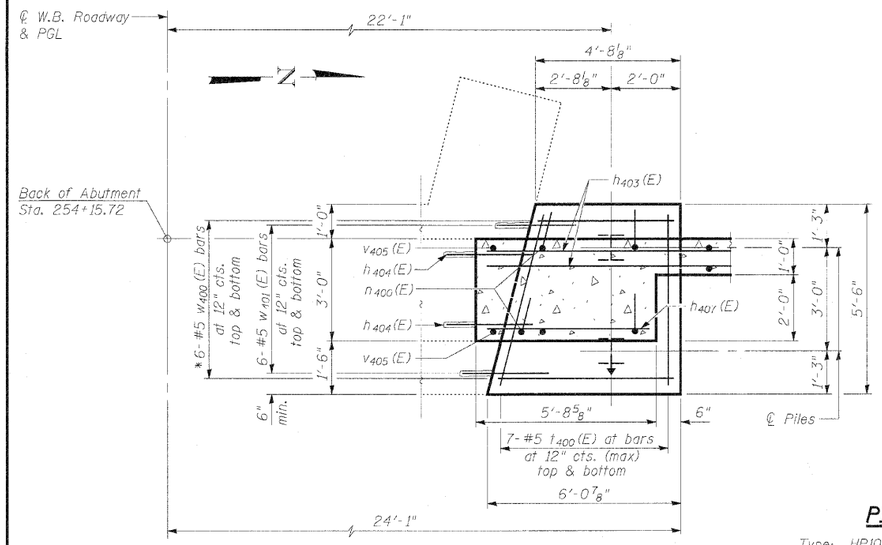

PARTIAL FOOTING PLAN

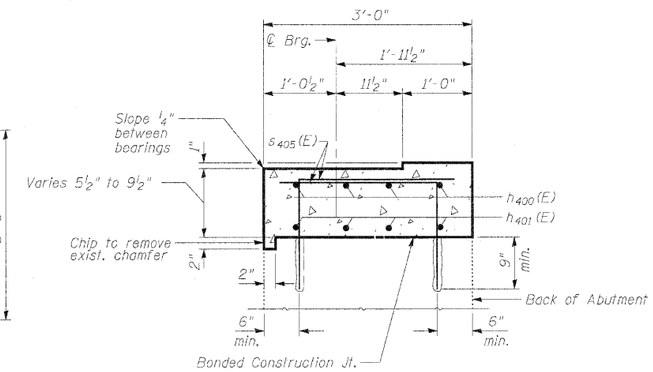

SECTION A-A

PILE DATA

Type: HP10x42 with pile shoes
Nominal Required Bearing: 335 kips
Allowable Resistance Available: 112 kips
Est. Length: 25.1 feet
No. Production Piles: 2
No. Test Piles: 0

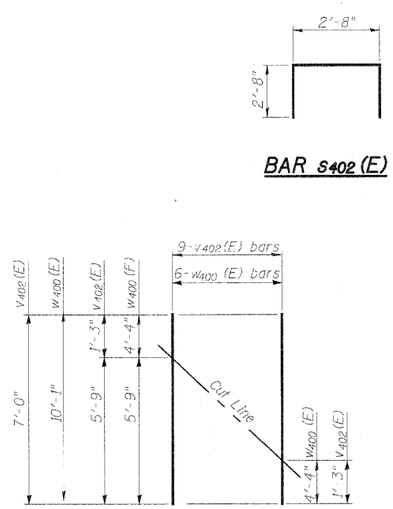

FIELD CUTTING DIAGRAM

Order bars full length.
Cut to fit as shown and use remainder of bars in opposite face.

BAR s402 (E)

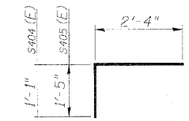

BARS s404 (E) & s405 (E)

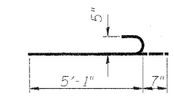

BAR n400 (E)

BILL OF MATERIAL

Bar	No.	Size	Length	Shape
n400 (E)	4	#5	6'-10"	
n401 (E)	4	#5	42'-10"	
n402 (E)	16	#5	5'-6"	
n403 (E)	10	#6	15'-6"	
n404 (E)	12	#6	4'-9"	
n405 (E)	6	#6	11'-5"	
n406 (E)	4	#6	13'-0"	
n407 (E)	3	#6	5'-5"	
n400 (E)	11	#5	5'-8"	
s401 (E)	18	#5	4'-0"	
s402 (E)	7	#5	8'-0"	
s404 (E)	58	#5	3'-5"	
s405 (E)	16	#5	3'-9"	
t400 (E)	14	#5	5'-3"	
v401 (E)	8	#5	6'-3"	
v402 (E)	18	#5	7'-0"	
v403 (E)	2	#5	3'-1"	
v404 (E)	2	#5	3'-9"	
v405 (E)	2	#5	3'-7"	
w400 (E)	12	#5	10'-1"	
w401 (E)	12	#5	4'-2"	
Porous Granular Embankment, Special		Cu. Yd.	122	
Structure Excavation		Cu. Yd.	104	
Concrete Structures		Cu. Yd.	10.8	
Concrete Encasement		Cu. Yd.	0.7	
Reinforcement Bars, Epoxy Coated		Pound	1750	
Furnishing Steel Piles, HP10x42		Foot	50.2	
Driving Piles		Foot	50.2	
Pile Shoes		Each	2	
Geocomposite Wall Drain		Sq. Yd.	43	
Pipe Underdrains for Structures 4"		Foot	63	

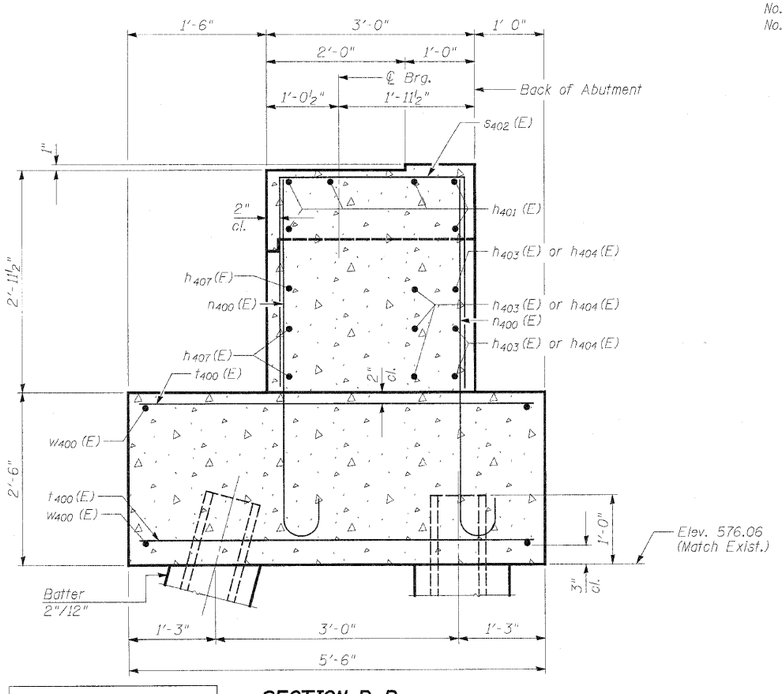

SECTION B-B

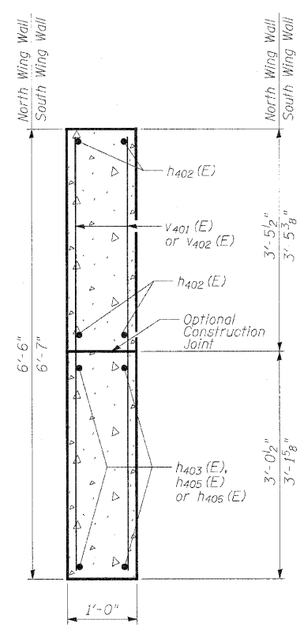

SECTION C-C

Notes:
→ Denotes direction of batter piles.
* See Field Cutting Diagram

DESIGNED	SST
CHECKED	-
DRAWN	ASJ
CHECKED	SPK

INFRASTRUCTURE ENGINEERING | INCORPORATED
33 West Monroe | Suite 1540 | Chicago, IL 60603
P 312.425.9560 | F 312.425.9564 | www.infrastructure-eng.com

W.B. ROADWAY WEST ABUTMENT DETAILS
STRUCTURE NO. 081-0022 (E.B.)
STRUCTURE NO. 081-0023 (W.B.)

SHEET NO. 26	F.A.I. RTE.	SECTION	COUNTY	TOTAL SHEETS	SHEET NO.
54 SHEETS	280	81-1(HB-2)R	ROCK ISLAND	503	308
			CONTRACT NO. 64815		
	FED. ROAD DIST. NO. _	ILLINOIS	FED. AID PROJECT		

STATE OF ILLINOIS
DEPARTMENT OF TRANSPORTATION

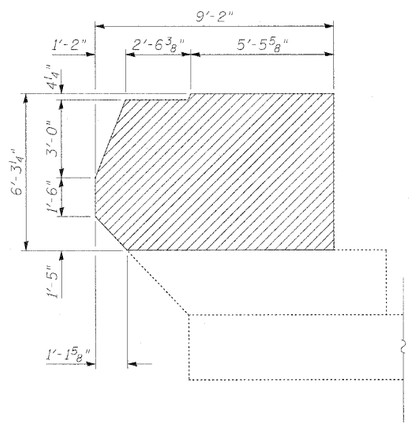

NORTH WINGWALL ELEVATION

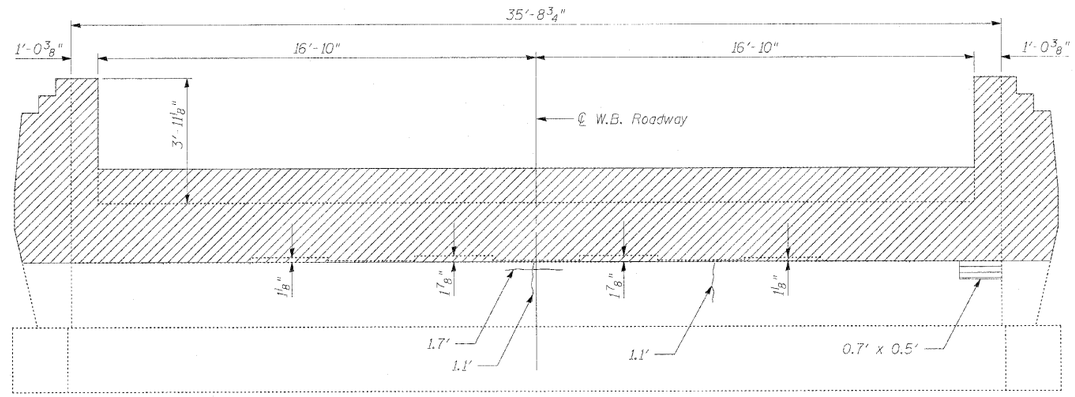

ELEVATION

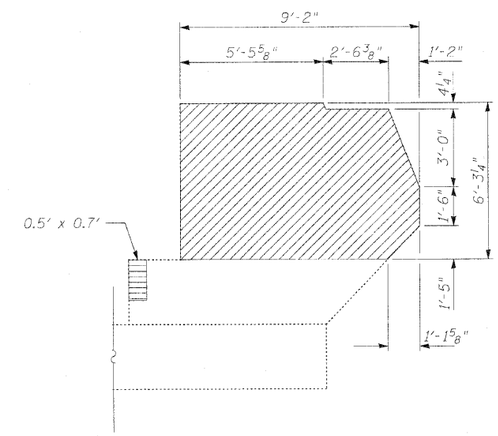

SOUTH WINGWALL ELEVATION

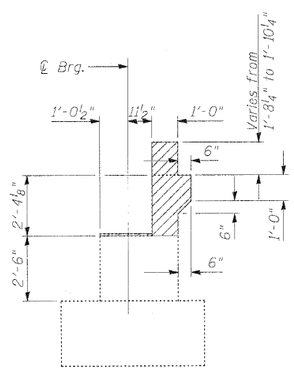

SECTION A-A

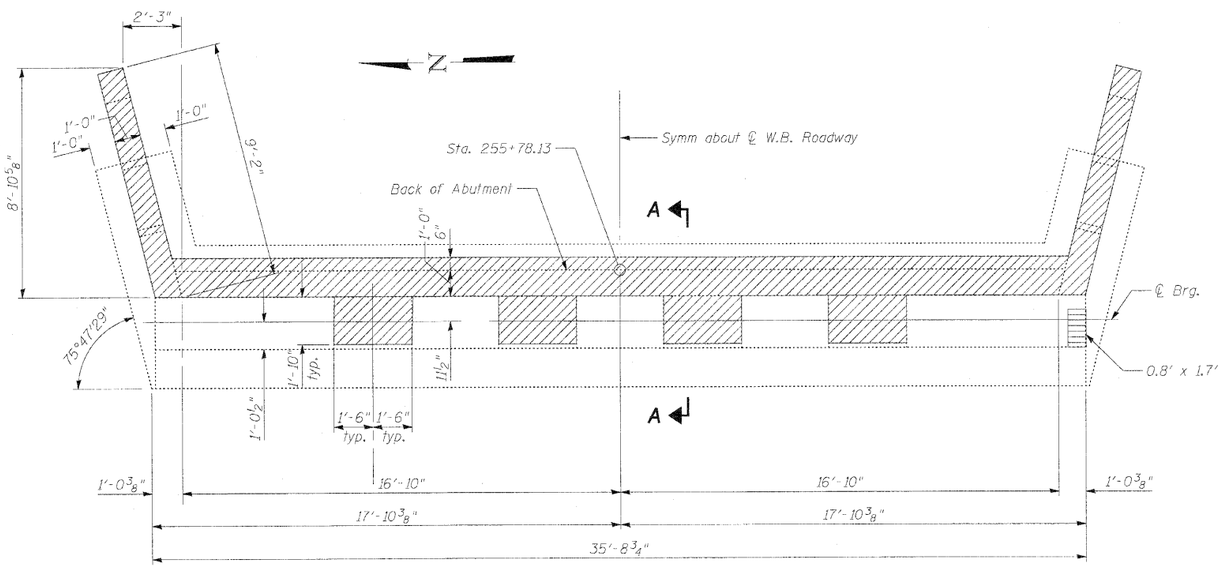

PLAN

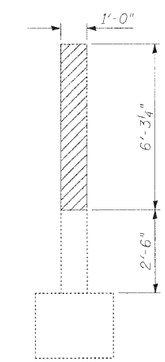

SECTION THRU WINGWALL

BILL OF MATERIAL

ITEM	UNIT	QUANTITY
Concrete Removal	Cu. Yd.	9.9
Epoxy Crack Injection	Foot	4
Structural Repair of Concrete (Depth Equal to or Less Than 5 Inches)	Sq. Ft.	2

W.B. ROADWAY EAST ABUTMENT CONCRETE REMOVAL & REPAIRS STRUCTURE NO. 081-0022 (E.B.) STRUCTURE NO. 081-0023 (W.B.)

DESIGNED	SST
CHECKED	SPK
DRAWN	ASJ
CHECKED	SPK

Notes:
Existing reinforcement bars that project from the abutment after concrete removal shall be cut flush with the concrete left in place. Cost included with Concrete Removal.
Repair of the existing abutment shall include but not be limited to the areas shown. The actual areas to be repaired will be determined by the Engineer at the time of construction.

Indicates limits of Concrete Removal
Indicates limits of Structural Repair of Concrete (Depth Equal to or Less Than 5 Inches)
Indicates limits of Epoxy Crack Injection

INFRASTRUCTURE ENGINEERING | INCORPORATED
33 West Monroe | Suite 1540 | Chicago, IL 60603
P 312.425.9560 | F 312.425.9564 | www.infrastructure-eng.com

SHEET NO. 27	F.A.I. RTE.	SECTION	COUNTY	TOTAL SHEETS	SHEET NO.
54 SHEETS	280	81-1(HB-2)R	ROCK ISLAND	503	309
			CONTRACT NO. 64815		
	FED. ROAD DIST. NO. _	ILLINOIS	FED. AID PROJECT		

STATE OF ILLINOIS
DEPARTMENT OF TRANSPORTATION

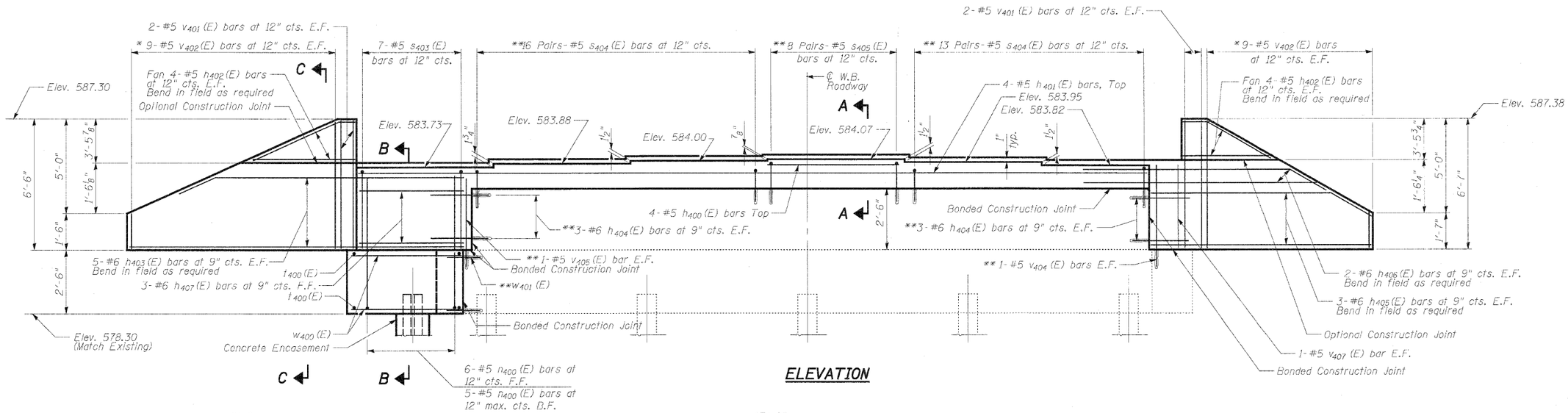

ELEVATION

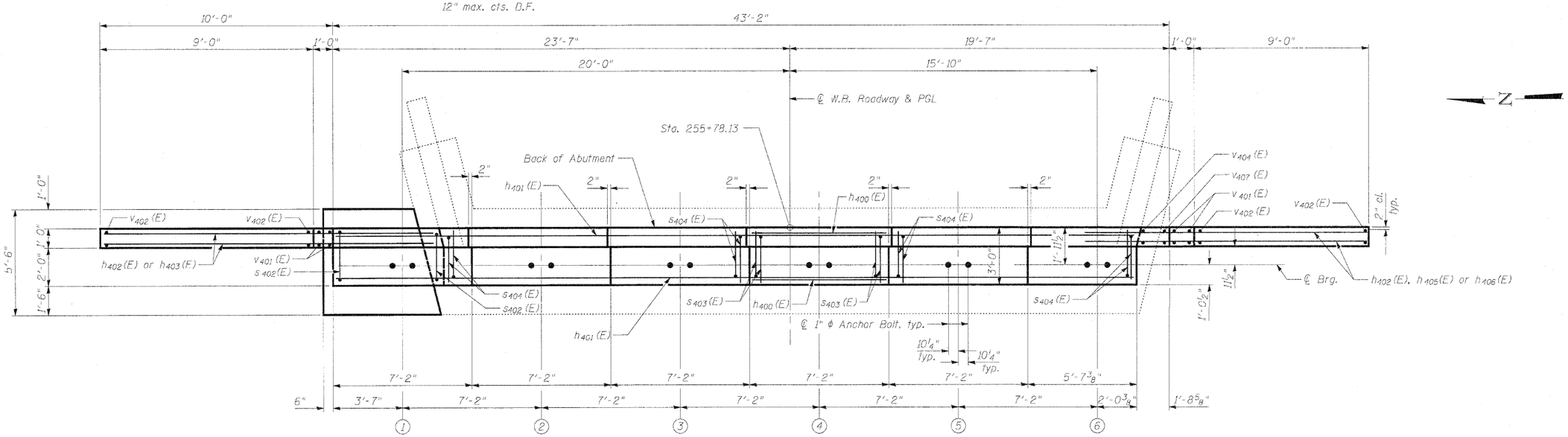

PLAN

Notes:
See Sheet 29 of 54 for Footing Plan, Sections A-A, B-B, C-C and Bill of Material.
Space reinforcement in cap to miss anchor bolts.
For details of piles, see sheet 47 of 54.
Pour steps monolithically with cap.
*See Field Cutting Diagram on sheet 29 of 54.
**Epoxy grout h401 (E), s404 (E), s405 (E), v406 (E), and w401 (E) bars in 9" (min.) drilled holes. See Section 584 of the Standard Specifications. Cost of hole drilling and epoxy grouting is included with Reinforcement Bars, Epoxy Coated.

B.F. = Back Face
E.F. = Each Face
F.F. = Front Face

W.B. ROADWAY EAST ABUTMENT WIDENING
STRUCTURE NO. 081-0022 (E.B.)
STRUCTURE NO. 081-0023 (W.B.)

DESIGNED	SST
CHECKED	-
DRAWN	ASJ
CHECKED	SPK

INFRASTRUCTURE ENGINEERING | INCORPORATED
33 West Monroe | Suite 1540 | Chicago, IL 60603
P 312.425.9560 | F 312.425.9564 | www.infrastructure-eng.com

SHEET NO. 28	F.A.I. RTE.	SECTION	COUNTY	TOTAL SHEETS	SHEET NO.
54 SHEETS	280	81-1(HB-2)R	ROCK ISLAND	503	310
			CONTRACT NO. 64815		
	FED. ROAD DIST. NO. _	ILLINOIS	FED. AID PROJECT		

STATE OF ILLINOIS
DEPARTMENT OF TRANSPORTATION

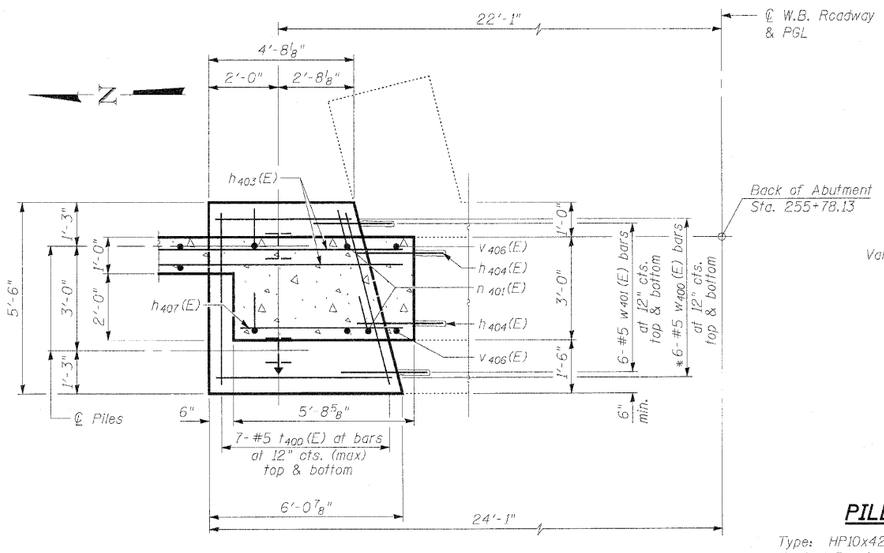

PARTIAL FOOTING PLAN

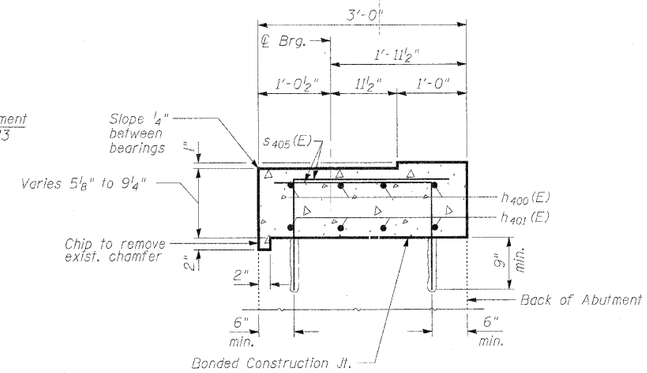

SECTION A-A

PILE DATA

Type: HP10x42 with pile shoes
Nominal Required Bearing: 335 kips
Allowable Resistance Available: 112 kips
Est. Length: 29 feet
No. Production Piles: 2
No. Test Piles: 0

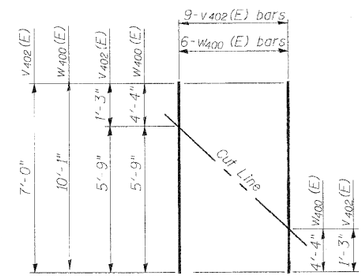

FIELD CUTTING DIAGRAM

Order bars full length.
Cut to fit as shown and use remainder of bars in opposite face.

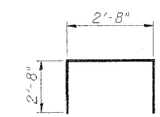

BAR s403 (E)

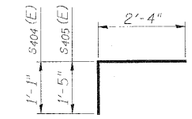

BAR s404 (E) & s405 (E)

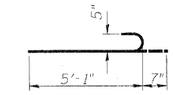

BAR n400 (E)

BILL OF MATERIAL

Bar	No.	Size	Length	Shape
h400 (E)	4	#5	6'-10"	
h401 (E)	4	#5	42'-10"	
h402 (E)	16	#5	5'-6"	
h403 (E)	10	#6	15'-6"	
h404 (E)	12	#6	4'-9"	
h405 (E)	6	#6	11'-5"	
h406 (E)	4	#6	13'-0"	
h407 (E)	3	#6	5'-5"	
n400 (E)	11	#5	5'-8"	
s403 (E)	7	#5	8'-0"	
s404 (E)	58	#5	3'-5"	
s405 (E)	16	#5	3'-9"	
t400 (E)	14	#5	5'-3"	
v401 (E)	8	#5	6'-3"	
v402 (E)	18	#5	7'-0"	
v404 (E)	2	#5	3'-9"	
v405 (E)	2	#5	3'-7"	
v407 (E)	2	#5	2'-10"	
w400 (E)	12	#5	10'-1"	
w401 (E)	12	#5	4'-2"	
Porous Granular Embankment, Special		Cu. Yd.	116	
Structure Excavation		Cu. Yd.	102	
Concrete Structures		Cu. Yd.	10.7	
Concrete Encasement		Cu. Yd.	0.7	
Reinforcement Bars, Epoxy Coated		Pound	1680	
Furnishing Steel Piles, HP10x42		Foot	58.0	
Driving Piles		Foot	58.0	
Pile Shoes		Each	2	
Geocomposite Wall Drain		Sq. Yd.	43	
Pipe Underdrains for Structures 4"		Foot	63	

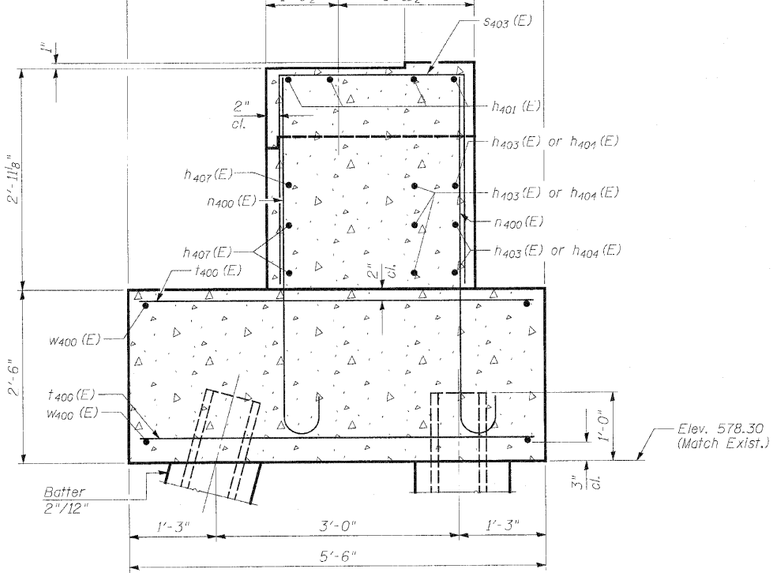

SECTION B-B

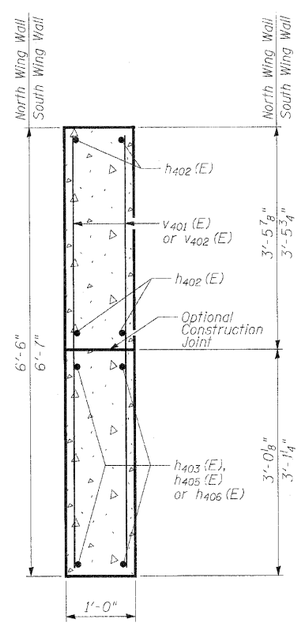

SECTION C-C

DESIGNED	SST
CHECKED	-
DRAWN	ASJ
CHECKED	SPK

Notes:
→ Denotes direction of batter piles.
* See Field Cutting Diagram

INFRASTRUCTURE ENGINEERING | INCORPORATED
33 West Monroe | Suite 1540 | Chicago, IL 60603
P 312.425.9560 | F 312.425.9564 | www.infrastructure-eng.com

W.B. ROADWAY EAST ABUTMENT DETAILS
STRUCTURE NO. 081-0022 (E.B.)
STRUCTURE NO. 081-0023 (W.B.)

SHEET NO. 29	F.A.I. RTE.	SECTION	COUNTY	TOTAL SHEETS	SHEET NO.
54 SHEETS	280	81-1(HB-2)R	ROCK ISLAND	503	311
			CONTRACT NO. 64815		
	FED. ROAD DIST. NO. _	ILLINOIS	FED. AID PROJECT		

STATE OF ILLINOIS
DEPARTMENT OF TRANSPORTATION

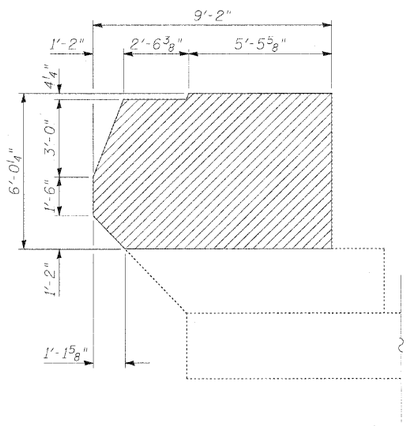

SOUTH WINGWALL ELEVATION

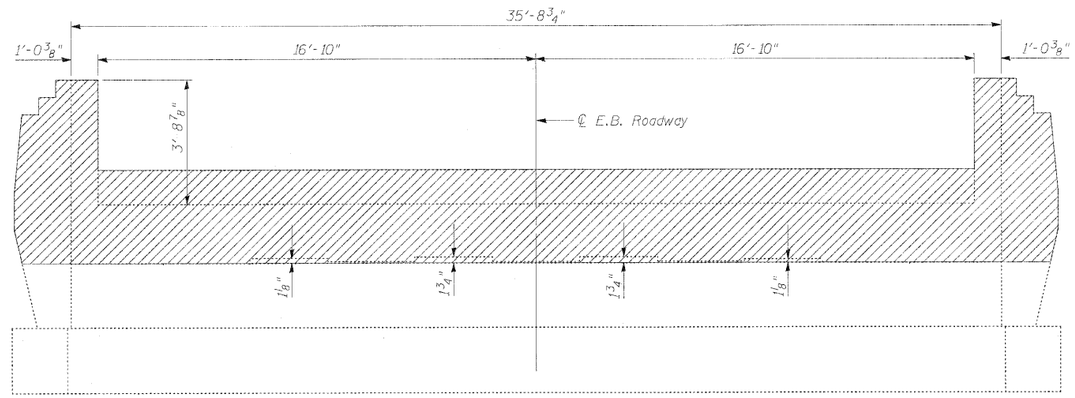

ELEVATION

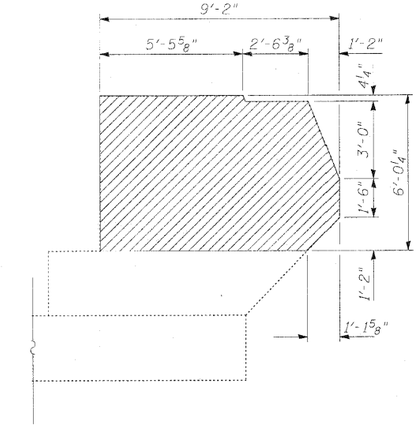

NORTH WINGWALL ELEVATION

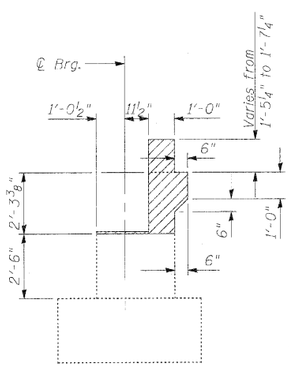

SECTION A-A

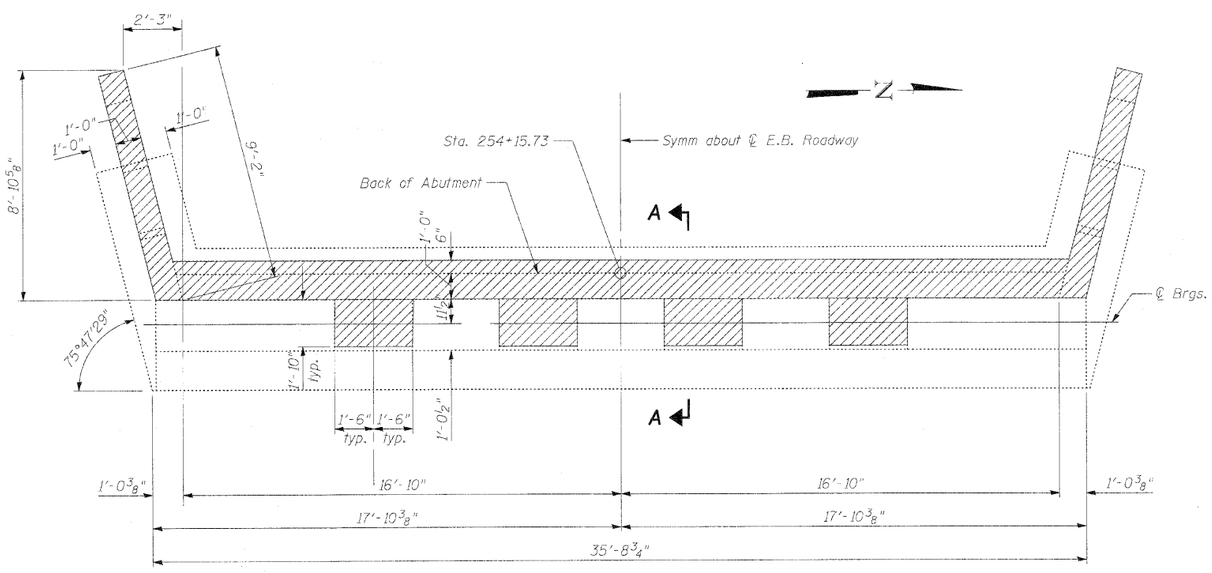

PLAN

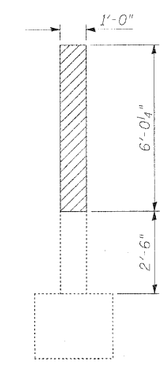

SECTION THRU WINGWALL

Note:
Existing reinforcement bars that project from the abutment after concrete removal shall be cut flush with the concrete left in place. Cost included with Concrete Removal.

BILL OF MATERIAL

Item	Unit	Total
Concrete Removal	Cu. Yd.	9.3

Concrete Removal

E.B. ROADWAY WEST ABUTMENT CONCRETE REMOVAL
STRUCTURE NO. 081-0022 (E.B.)
STRUCTURE NO. 081-0023 (W.B.)

DESIGNED SST				
CHECKED SPK				
DRAWN ASJ				
CHECKED SPK				

INFRASTRUCTURE ENGINEERING INCORPORATED
33 West Monroe | Suite 1540 | Chicago, IL 60603
P 312.425.9560 | F 312.425.9564 | www.infrastructure-eng.com

	F.A.I. RTE.	SECTION	COUNTY	TOTAL SHEETS	SHEET NO.
SHEET NO. 30	280	81-1(HB-2)R	ROCK ISLAND	503	312
54 SHEETS			CONTRACT NO. 64815		
	FED. ROAD DIST. NO. _	ILLINOIS	FED. AID PROJECT		

STATE OF ILLINOIS
DEPARTMENT OF TRANSPORTATION

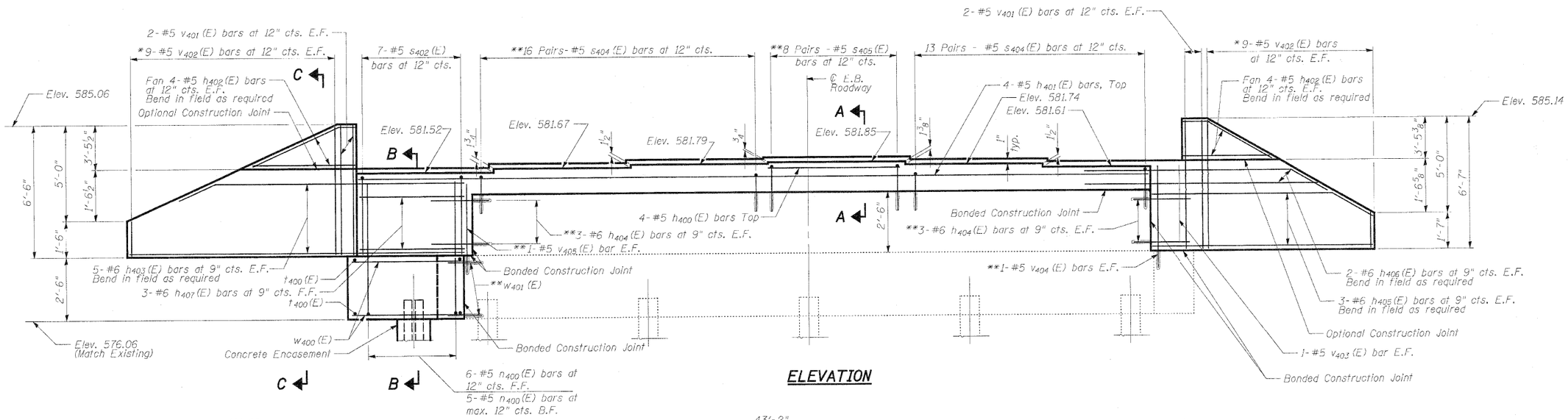

ELEVATION

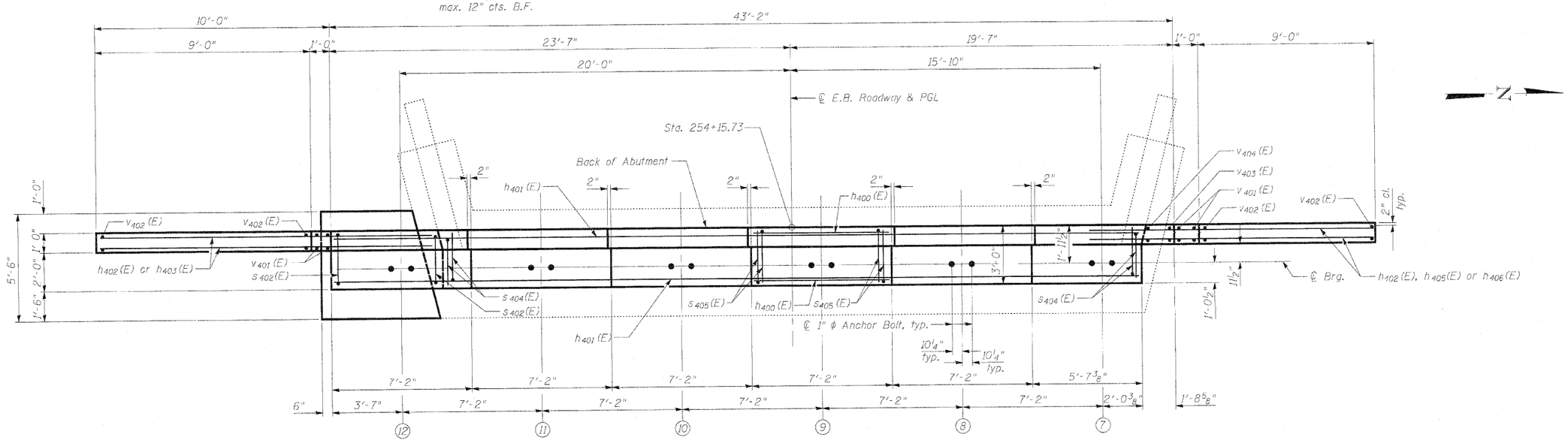

PLAN

Notes:
See Sheet 32 of 54 for Footing Plan, Sections A-A, B-B, C-C, and Bill of Material.
Space reinforcement in cap to miss anchor bolts.
For details of piles, see sheet 47 of 54.
Pour steps monolithically with cap.
*See Field Cutting Diagram on sheet 32 of 54.
**Epoxy grout h404 (E), s404 (E), s405 (E), v404 (E), and w401 (E) bars in 9" (min.) drilled holes. See Section 584 of the Standard Specifications. Cost of hole drilling and epoxy grouting is included with Reinforcement Bars, Epoxy Coated.

B.F. = Back Face
E.F. = Each Face
F.F. = Front Face

E.B. ROADWAY WEST ABUTMENT WIDENING
STRUCTURE NO. 081-0022 (E.B.)
STRUCTURE NO. 081-0023 (W.B.)

DESIGNED	SST
CHECKED	-
DRAWN	ASJ
CHECKED	SPK

INFRASTRUCTURE ENGINEERING INCORPORATED
33 West Monroe | Suite 1540 | Chicago, IL 60603
P 312.425.9560 | F 312.425.9564 | www.infrastructure-eng.com

SHEET NO. 31	F.A.I. RTE.	SECTION	COUNTY	TOTAL SHEETS	SHEET NO.
54 SHEETS	280	81-1(HB-2)R	ROCK ISLAND	503	313
			CONTRACT NO. 64815		
	FED. ROAD DIST. NO. _	ILLINOIS	FED. AID PROJECT		

STATE OF ILLINOIS
DEPARTMENT OF TRANSPORTATION

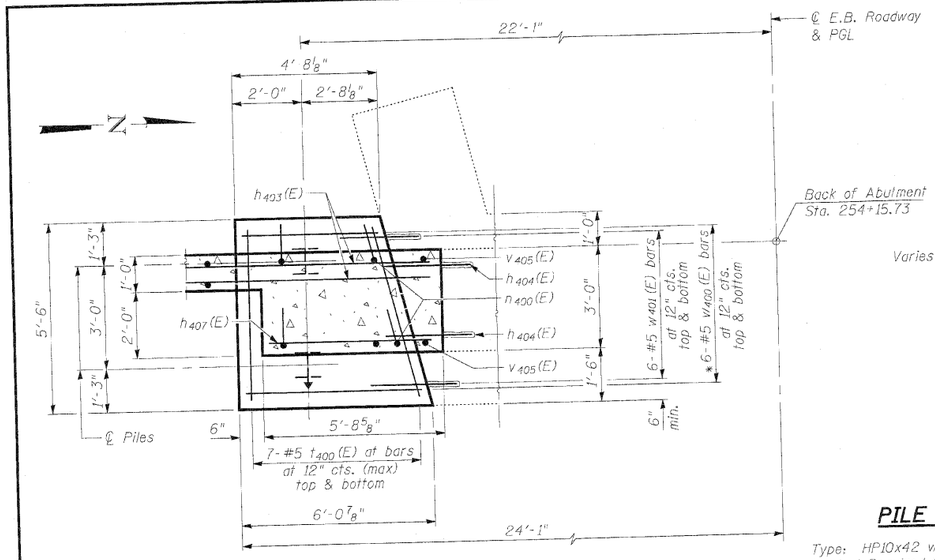

PARTIAL FOOTING PLAN

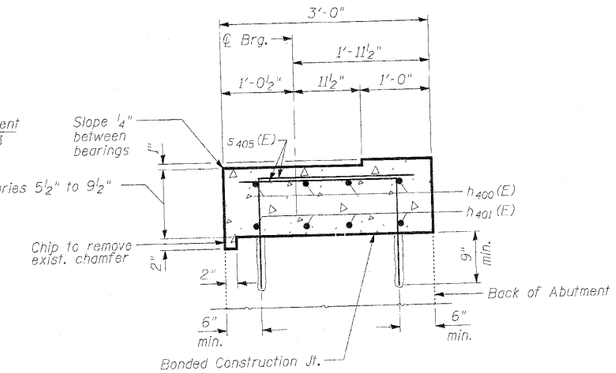

SECTION A-A

PILE DATA

Type: HP10x42 with pile shoes
Nominal Required Bearing: 335 kips
Allowable Resistance Available: 112 kips
Est. Length: 24.1 feet
No. Production Piles: 2
No Test Piles: 0

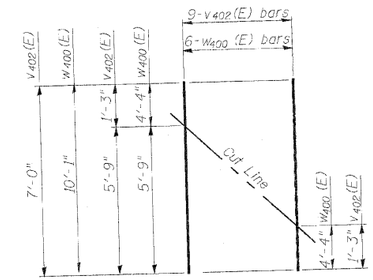

FIELD CUTTING DIAGRAM

Order bars full length.
Cut to fit as shown and use remainder of bars in opposite face.

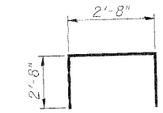

BAR s402 (E)

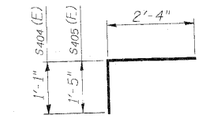

BARS s404 (E) & s405 (E)

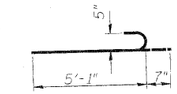

BAR n400 (E)

BILL OF MATERIAL

Bar	No.	Size	Length	Shape
h400 (E)	4	#5	6'-10"	
h401 (E)	4	#5	42'-10"	
h402 (E)	16	#5	5'-6"	
h403 (E)	10	#6	15'-6"	
h404 (E)	12	#6	4'-9"	
h405 (E)	6	#6	11'-5"	
h406 (E)	4	#6	13'-0"	
h407 (E)	3	#6	5'-5"	
n400 (E)	11	#5	5'-8"	
s401 (E)	18	#5	4'-0"	
s402 (E)	7	#5	8'-0"	
s404 (E)	58	#5	3'-5"	
s405 (E)	16	#5	3'-9"	
t400 (E)	14	#5	5'-3"	
v401 (E)	8	#5	6'-3"	
v402 (E)	18	#5	7'-0"	
v403 (E)	2	#5	3'-1"	
v404 (E)	2	#5	3'-9"	
v405 (E)	2	#5	3'-7"	
w400 (E)	12	#5	10'-1"	
w401 (E)	12	#5	4'-2"	
Porous Granular Embankment, Special		Cu. Yd.	122	
Structure Excavation		Cu. Yd.	104	
Concrete Structures		Cu. Yd.	10.8	
Concrete Encasement		Cu. Yd.	0.7	
Reinforcement Bars, Epoxy Coated		Pound	1750	
Furnishing Steel Piles, HP10x42		Foot	48.2	
Driving Piles		Foot	48.2	
Pile Shoes		Each	2	
Geocomposite Wall Drain		Sq. Yd.	43	
Pipe Underdrains for Structures 4"		Foot	63	

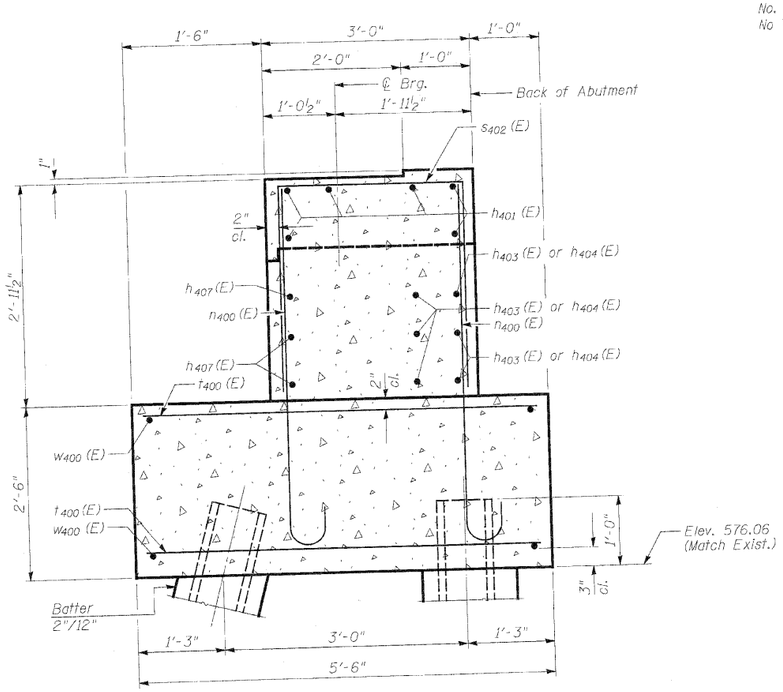

SECTION B-B

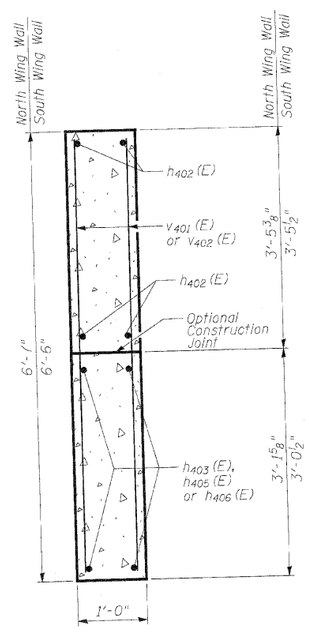

SECTION C-C

DESIGNED	SST
CHECKED	-
DRAWN	ASJ
CHECKED	SPK

Notes:
→ Denotes direction of batter piles.
* See Field Cutting Diagram

INFRASTRUCTURE ENGINEERING | INCORPORATED
33 West Monroe | Suite 1540 | Chicago, IL 60603
P 312.425.9560 | F 312.425.9564 | www.infrastructure-eng.com

E.B. ROADWAY WEST ABUTMENT DETAILS
STRUCTURE NO. 081-0022 (E.B.)
STRUCTURE NO. 081-0023 (W.B.)

SHEET NO. 32	F.A.I. RTE.	SECTION	COUNTY	TOTAL SHEETS	SHEET NO.
54 SHEETS	280	81-1(HB-2)R	ROCK ISLAND	503	314
			CONTRACT NO. 64815		
	FED. ROAD DIST. NO. _	ILLINOIS	FED. AID PROJECT		

STATE OF ILLINOIS
DEPARTMENT OF TRANSPORTATION

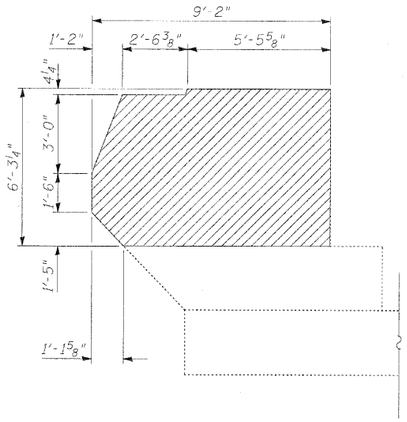

NORTH WINGWALL ELEVATION

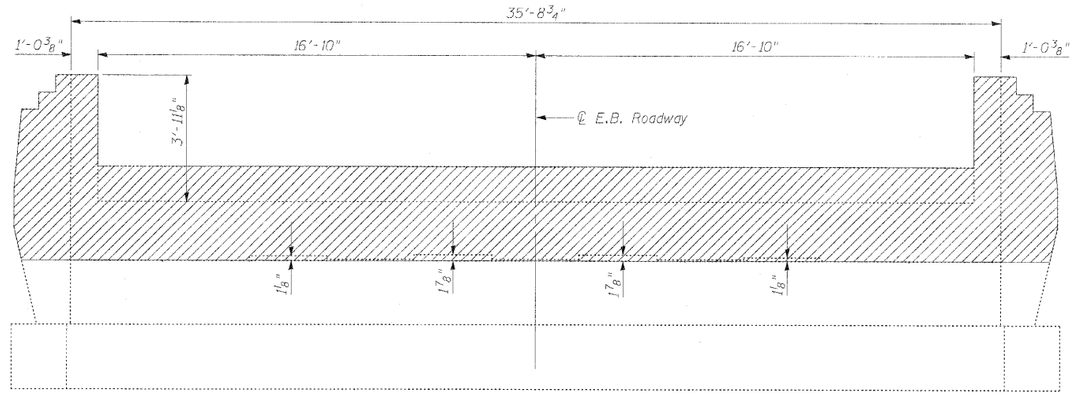

ELEVATION
(Looking East)

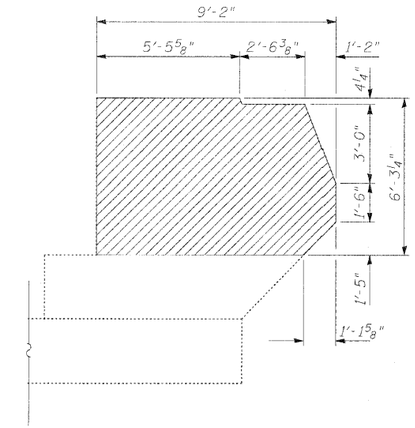

SOUTH WINGWALL ELEVATION

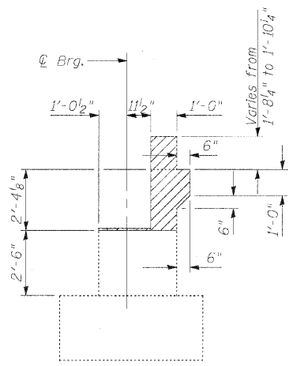

SECTION A-A

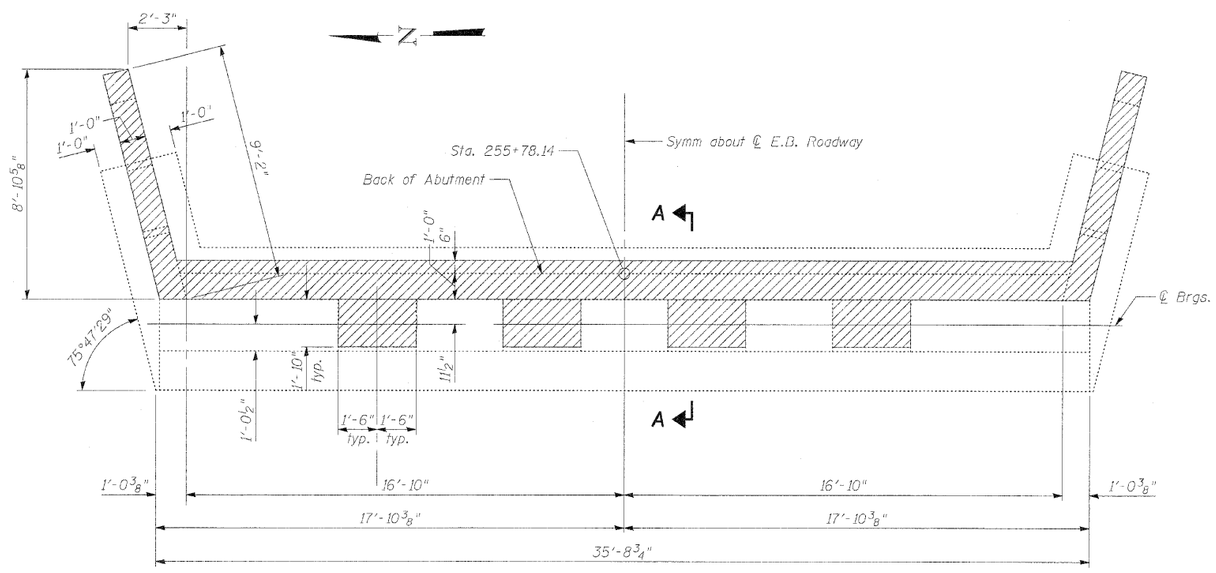

PLAN

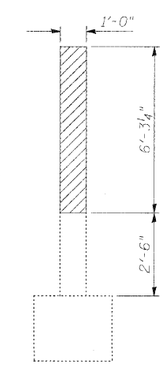

SECTION THRU WINGWALL

Note:
Existing reinforcement bars that project from the abutment after concrete removal shall be cut flush with the concrete left in place. Cost included with Concrete Removal.

BILL OF MATERIAL

Item	Unit	Total
Concrete Removal	Cu. Yd.	9.9

Concrete Removal

E.B. ROADWAY EAST ABUTMENT CONCRETE REMOVAL
STRUCTURE NO. 081-0022 (E.B.)
STRUCTURE NO. 081-0023 (W.B.)

DESIGNED	SST
CHECKED	SPK
DRAWN	ASJ
CHECKED	SPK

INFRASTRUCTURE ENGINEERING | INCORPORATED
33 West Monroe | Suite 1540 | Chicago, IL 60603
P 312.425.9560 | F 312.425.9564 | www.infrastructure-eng.com

SHEET NO. 33	F.A.I. RTE.	SECTION	COUNTY	TOTAL SHEETS	SHEET NO.
54 SHEETS	280	81-1(HB-2)R	ROCK ISLAND	503	315
			CONTRACT NO. 64815		
	FED. ROAD DIST. NO. _	ILLINOIS	FED. AID PROJECT		

STATE OF ILLINOIS
DEPARTMENT OF TRANSPORTATION

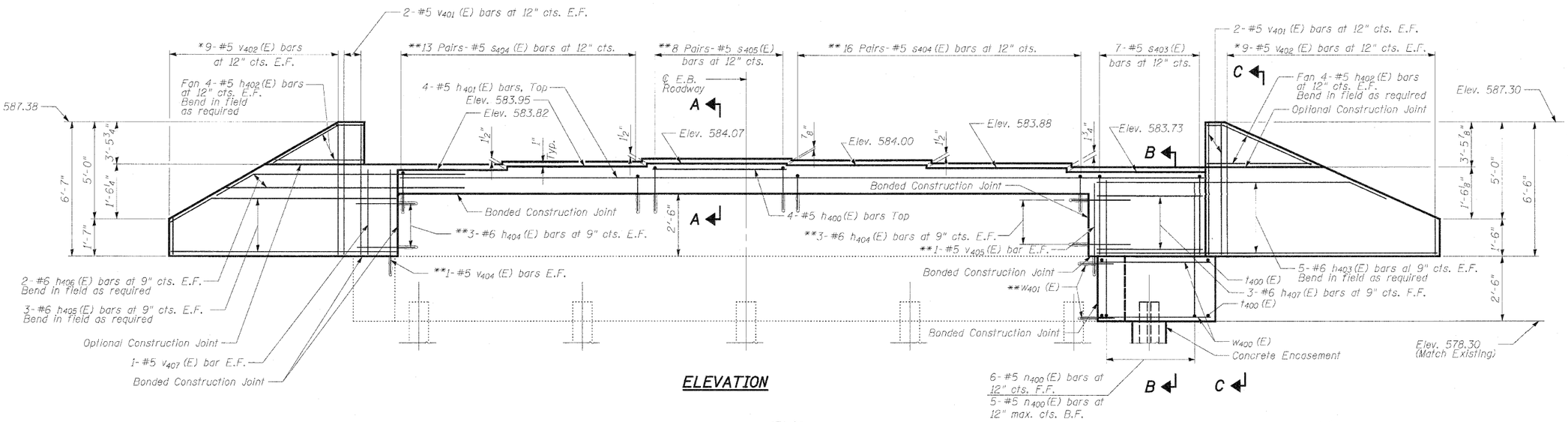

ELEVATION

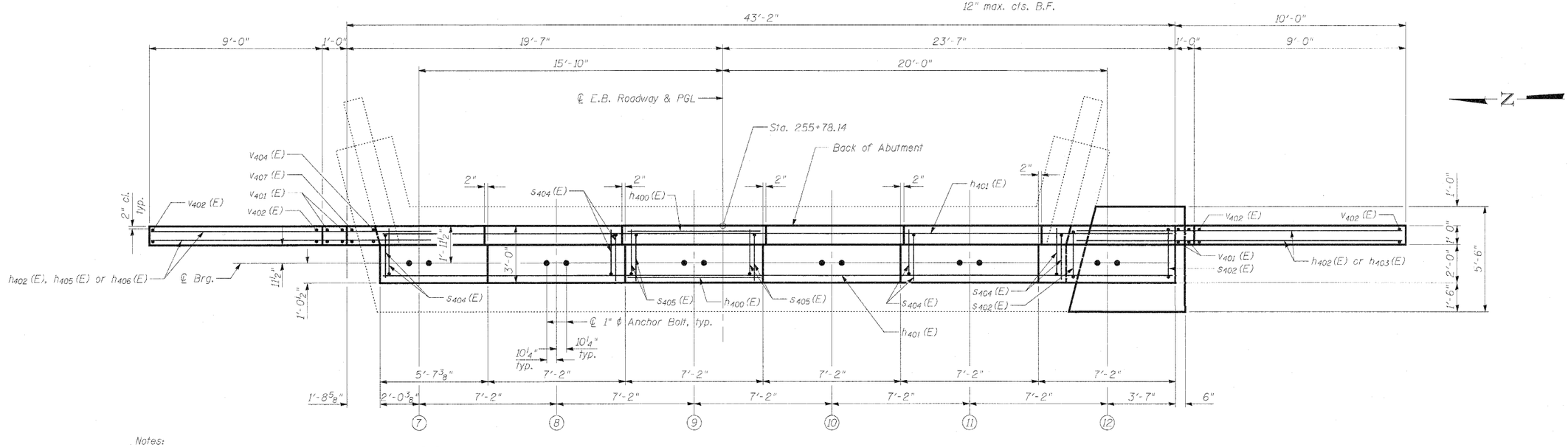

PLAN

B.F. = Back Face
E.F. = Each Face
F.F. = Front Face

Notes:
See sheet 35 of 54 for Footing Plan, Sections A-A, B-B, C-C and Bill of Material.
Space reinforcement in cap to miss anchor bolts.
For details of piles, see sheet 47 of 54.
Pour steps monolithically with cap.
*See Field Cutting Diagram on sheet 35 of 54.
**Epoxy grout h404 (E), s404 (E), s405 (E), v406 (E), and w401 (E) bars in 9" (min.) drilled holes. See Section 584 of the Standard Specifications. Cost of hole drilling and epoxy grouting is included with Reinforcement Bars, Epoxy Coated.

DESIGNED	SST
CHECKED	-
DRAWN	ASJ
CHECKED	SPK

E.B. ROADWAY EAST ABUTMENT WIDENING
STRUCTURE NO. 081-0022 (E.B.)
STRUCTURE NO. 081-0023 (W.B.)

INFRASTRUCTURE ENGINEERING INCORPORATED
33 West Monroe | Suite 1540 | Chicago, IL 60603
P 312.425.9560 | F 312.425.9564 | www.infrastructure-eng.com

SHEET NO. 34	F.A.I. RTE.	SECTION	COUNTY	TOTAL SHEETS	SHEET NO.
54 SHEETS	280	81-1(HB-2)R	ROCK ISLAND	503	316
			CONTRACT NO. 64815		
	FED. ROAD DIST. NO. _	ILLINOIS	FED. AID PROJECT		

STATE OF ILLINOIS
DEPARTMENT OF TRANSPORTATION

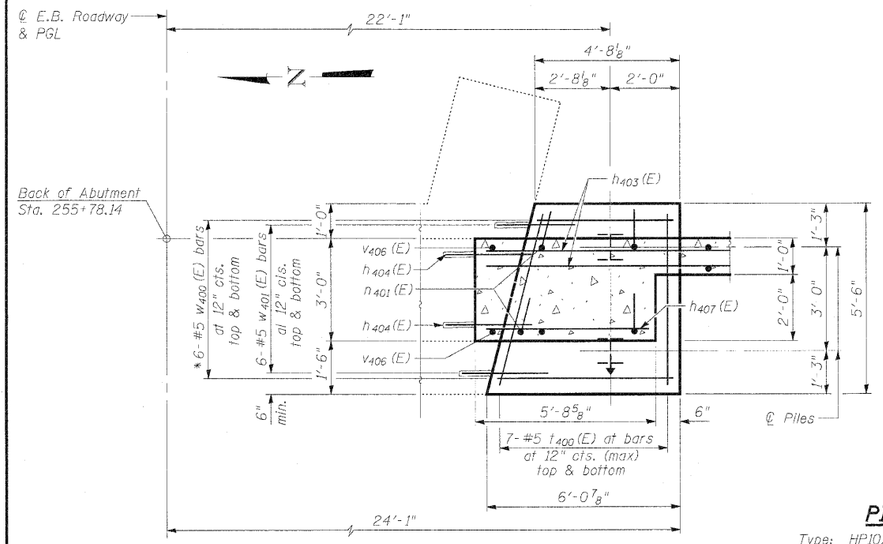

PARTIAL FOOTING PLAN

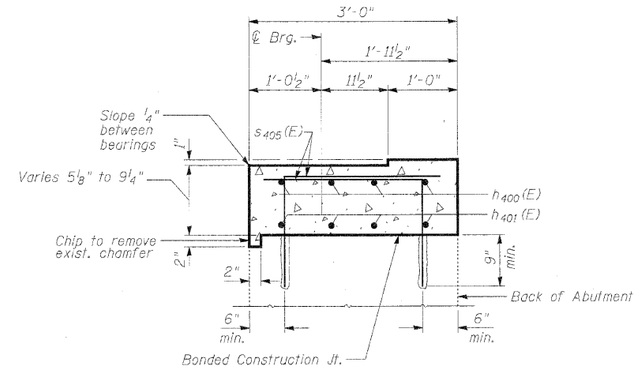

SECTION A-A

PILE DATA

Type: HP10x42 with pile shoes
Nominal Required Bearing: 335 kips
Allowable Resistance Available: 112 kips
Est. Length: 29 feet
No. Production Piles: 2
No. Test Piles: 0

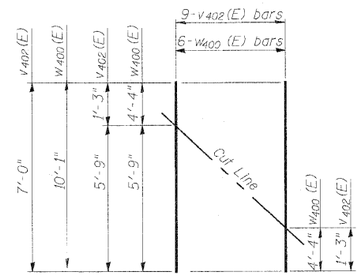

FIELD CUTTING DIAGRAM

Order bars full length.
Cut to fit as shown and use remainder of bars in opposite face.

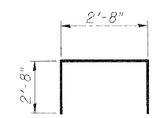

BAR s403 (E)

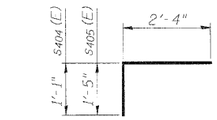

BAR s404 (E) & s405 (E)

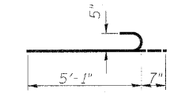

BAR n400 (E)

BILL OF MATERIAL

Bar	No.	Size	Length	Shape
h400 (E)	4	#5	6'-10"	
h401 (E)	4	#5	42'-10"	
h402 (E)	16	#5	5'-6"	
h403 (E)	10	#6	15'-6"	
h404 (E)	12	#6	4'-9"	
h405 (E)	6	#6	11'-5"	
h406 (E)	4	#6	13'-0"	
h407 (E)	3	#6	5'-5"	
n400 (E)	11	#5	5'-8"	
s403 (E)	7	#5	8'-0"	
s404 (E)	58	#5	3'-5"	
s405 (E)	16	#5	3'-9"	
t400 (E)	14	#5	5'-3"	
v401 (E)	8	#5	6'-3"	
v402 (E)	18	#5	7'-0"	
v404 (E)	2	#5	3'-9"	
v405 (E)	2	#5	3'-7"	
v407 (E)	2	#5	2'-10"	
w400 (E)	12	#5	10'-1"	
w401 (E)	12	#5	4'-2"	

Porous Granular Embankment, Special	Cu. Yd.	116
Structure Excavation	Cu. Yd.	102
Concrete Structures	Cu. Yd.	10.7
Concrete Encasement	Cu. Yd.	0.7
Reinforcement Bars, Epoxy Coated	Pound	1670
Furnishing Steel Piles, HP10x42	Foot	58.0
Driving Piles	Foot	58.0
Pile Shoes	Each	2
Geocomposite Wall Drain	Sq. Yd.	43
Pipe Underdrains for Structures 4"	Foot	63

SECTION B-B

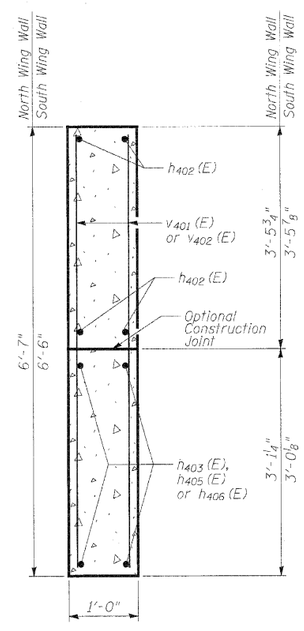

SECTION C-C

DESIGNED	SST
CHECKED	-
DRAWN	ASJ
CHECKED	SPK

Notes:
→ Denotes direction of batter piles.
* See Field Cutting Diagram

INFRASTRUCTURE ENGINEERING | INCORPORATED
33 West Monroe | Suite 1540 | Chicago, IL 60603
P 312.425.9560 | F 312.425.9564 | www.infrastructure-eng.com

E.B. ROADWAY EAST ABUTMENT DETAILS
STRUCTURE NO. 081-0022 (E.B.)
STRUCTURE NO. 081-0023 (W.B.)

SHEET NO. 35	F.A.I. RTE.	SECTION	COUNTY	TOTAL SHEETS	SHEET NO.
54 SHEETS	280	81-1(HB-2)R	ROCK ISLAND	503	317
			CONTRACT NO. 64815		
	FED. ROAD DIST. NO. _	ILLINOIS	FED. AID PROJECT		

STATE OF ILLINOIS
DEPARTMENT OF TRANSPORTATION

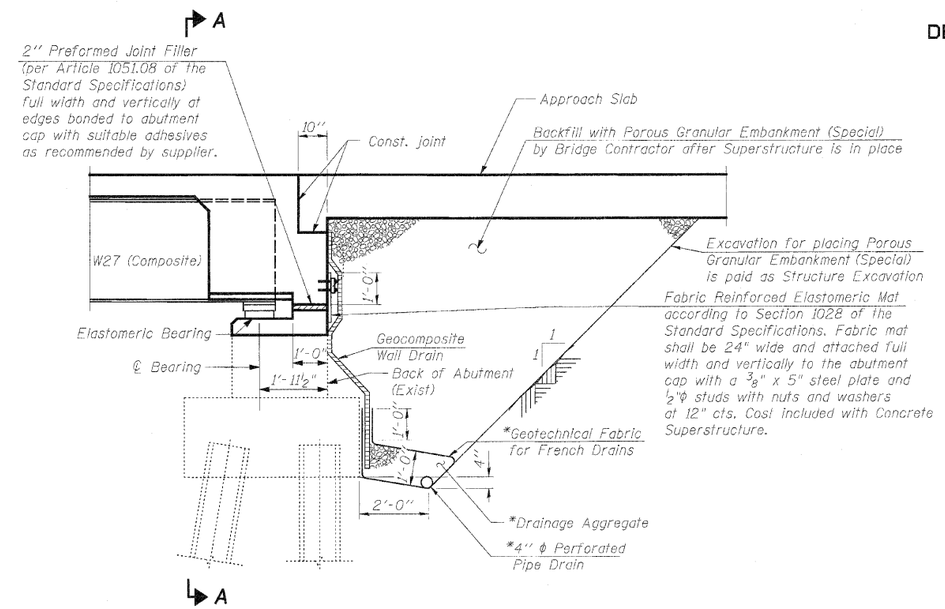

TYPICAL ABUTMENT DRAINAGE DETAIL

*Included in the cost of Pipe Underdrains for Structures.

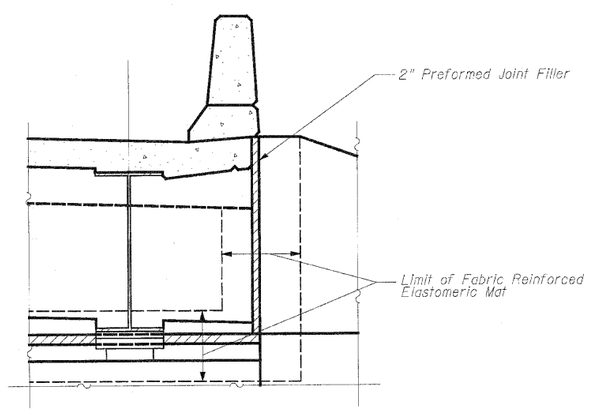

SECTION A-A

Note:
All drainage system components shall extend to 2'-0" from the end of each wingwall except an outet pipe shall extend until intersecting with the side slopes. The pipe shall drain into concrete headwall. See Article 601.05 of the Standard Specifications and Highway Standard 601101.

DESIGNED	
CHECKED	-
DRAWN	ASJ
CHECKED	SPK

ABUTMENT DRAINAGE
STRUCTURE NO. 081-0022 (E.B.)
STRUCTURE NO. 081-0023 (W.B.)

INFRASTRUCTURE ENGINEERING | INCORPORATED
33 West Monroe | Suite 1540 | Chicago, IL 60603
P 312.425.9560 | F 312.425.9564 | www.infrastructure-eng.com

SHEET NO. 36	F.A.I. RTE.	SECTION	COUNTY	TOTAL SHEETS	SHEET NO.
54 SHEETS	280	81-1(HB-2)R	ROCK ISLAND	503	318
			CONTRACT NO. 64815		
	FED. ROAD DIST. NO. _	ILLINOIS	FED. AID PROJECT		

STATE OF ILLINOIS
DEPARTMENT OF TRANSPORTATION

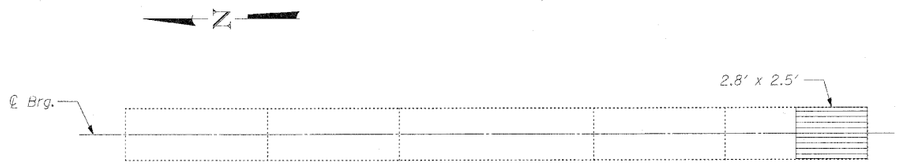

PLAN

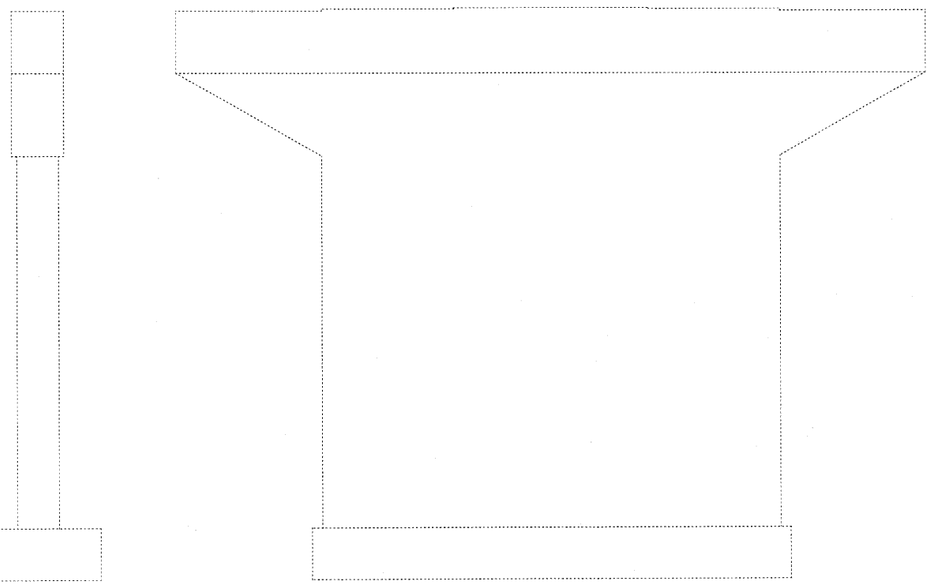

NORTH ELEVATION
(Looking South)

WEST ELEVATION
(Looking East)

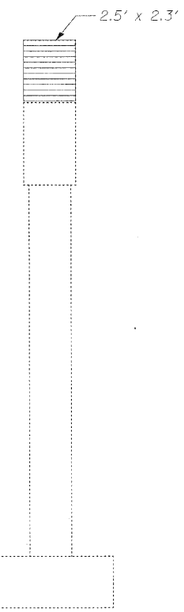

SOUTH ELEVATION
(Looking North)

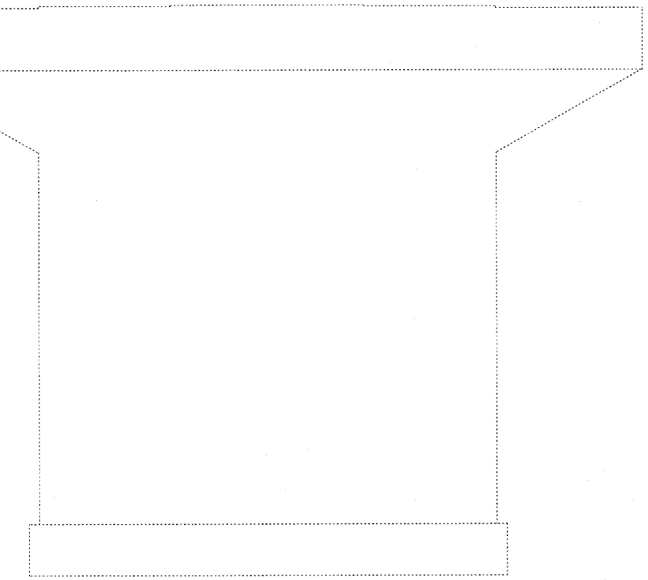

EAST ELEVATION
(Looking West)

BILL OF MATERIAL

ITEM	UNIT	QUANTITY
Structural Repair of Concrete (Depth Equal to or Less Than 5 Inches)	Sq. Ft.	13

PIER 1 REPAIRS
STRUCTURE NO. 081-0022 (E.B.)
STRUCTURE NO. 081-0022 (W.B.)

DESIGNED	
CHECKED	
DRAWN	ASJ
CHECKED	SPK

Note:
Repair of the existing pier shall include but not be limited to the areas shown. The actual areas to be repaired will be determined by the Engineer at the time of construction

Indicates limits of Structural Repair of Concrete (Depth Equal to or Less Than 5 Inches)

INFRASTRUCTURE ENGINEERING | INCORPORATED
33 West Monroe | Suite 1540 | Chicago, IL 60603
P 312.425.9560 | F 312.425.9564 | www.infrastructure-eng.com

SHEET NO. 37	F.A.I. RTE.	SECTION	COUNTY	TOTAL SHEETS	SHEET NO.
54 SHEETS	280	81-1(HB-2)R	ROCK ISLAND	503	319
			CONTRACT NO. 64815		
	FED. ROAD DIST. NO. _	ILLINOIS	FED. AID PROJECT		

STATE OF ILLINOIS
DEPARTMENT OF TRANSPORTATION

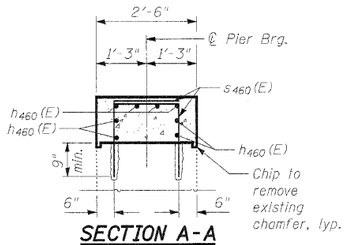

SECTION A-A

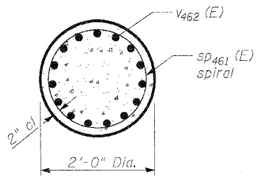

SECTION B-B

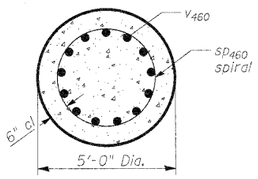

SECTION C-C

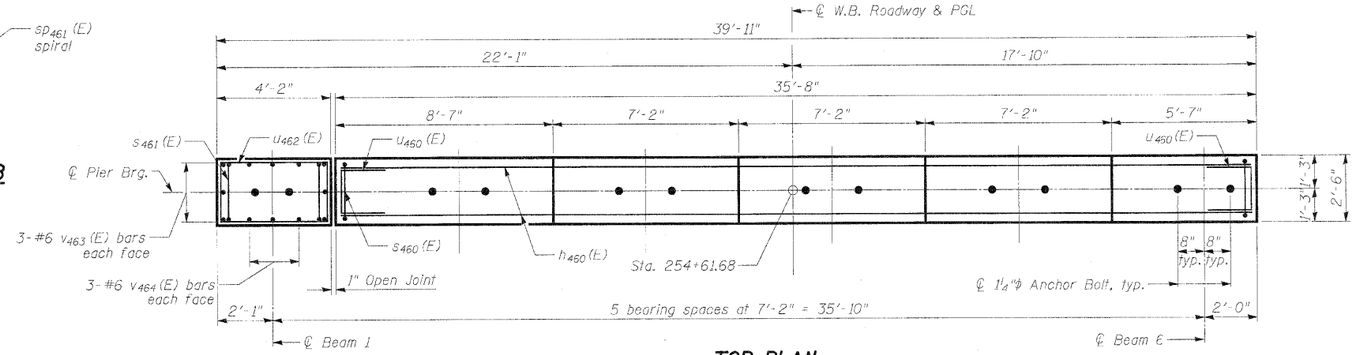

TOP PLAN

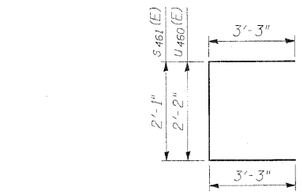

BARS s461 (E) & u460 (E)

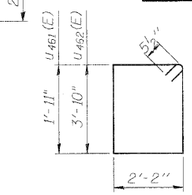

BARS u461 (E) & u462 (E)

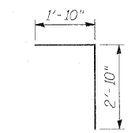

BAR s460 (E)

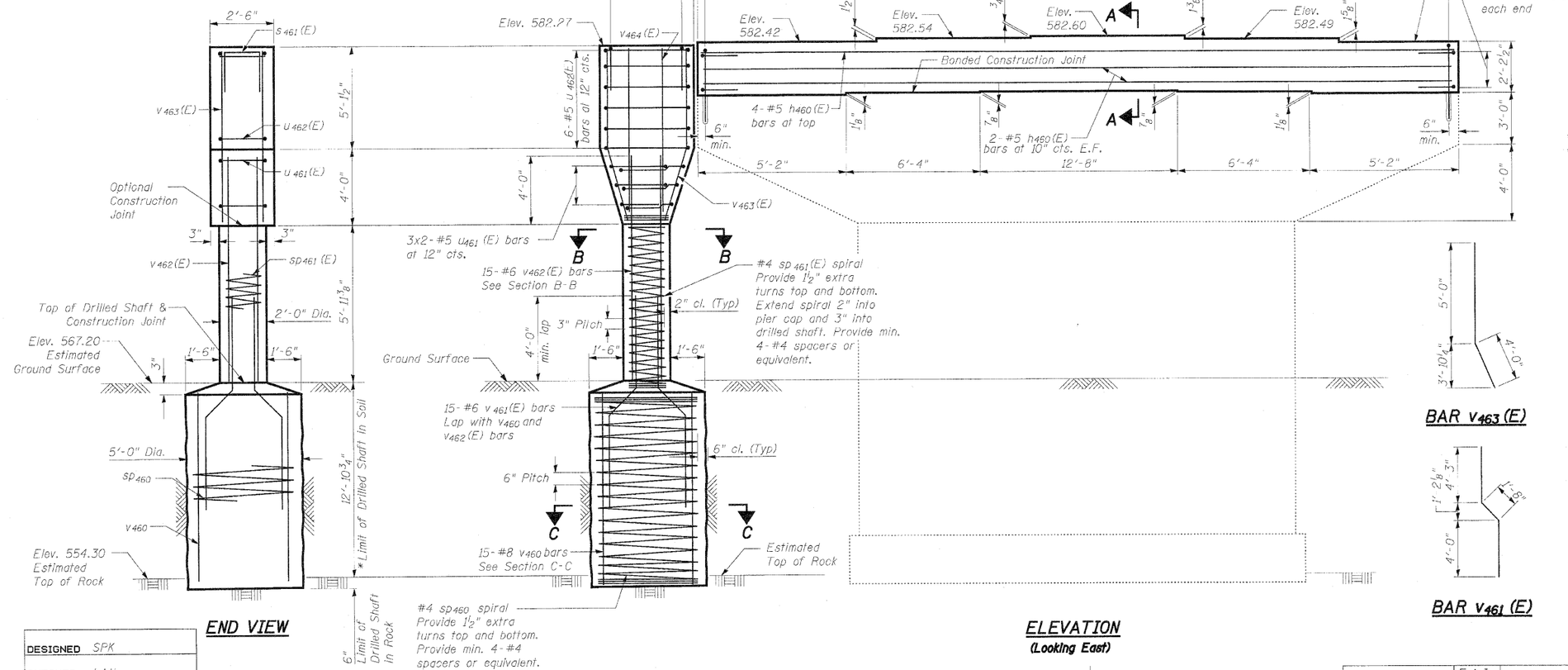

BAR v463 (E)

BAR v461 (E)

BILL OF MATERIAL

Bar	No.	Size	Length	Shape
h460 (E)	8	#5	35'-4"	
s460 (E)	72	#5	4'-8"	
s461 (E)	5	#5	8'-7"	
** sp460	1	#4	12'-9"	
** sp461 (E)	1	#4	6'-5"	
u460 (E)	6	#5	8'-8"	
u461 (E)	6	#5	9'-1"	
u462 (E)	6	#5	12'-11"	
v460	15	#8	12'-9"	
v461 (E)	15	#6	9'-11"	
v462 (E)	15	#6	9'-10"	
v463 (E)	6	#6	9'-0"	
v464 (E)	6	#6	8'-10"	
Concrete Structures			Cu. Yd.	11.1
Reinforcement Bars, Epoxy Coated			Pounds	1590
Reinforcement Bars			Pounds	770
Drilled Shaft in Soil			Cu. Yd.	9.3
Drilled Shaft in Rock			Cu. Yd.	0.4
Concrete Sealer			Sq. Ft.	396

Allowable Soil Bearing Pressure is 10,000 psf on sound rock.
Cast Steps monolithically with cap.
Space cap reinforcement to miss anchor bolts.
Minimum lap for spirals = 2'-0"
Epoxy grout s460 (E) bars in 9" (min.) drilled holes.
See Section 584 of the Standard Specifications.
Cost of hole drilling and epoxy grouting is included with Reinforcement Bars, Epoxy Coated.
** Length is height of spiral.

* The quantities and reinforcement detailing are based on the top of shaft and the estimated top of rock elevations shown and may change based on the actual top of rock elevation encountered and final top of shaft elevation.

PIER 1 WIDENING
STRUCTURE NO. 081-0022 (E.B.)
STRUCTURE NO. 081-0023 (W.B.)

DESIGNED	SPK
CHECKED	LAN
DRAWN	ASJ
CHECKED	SPK

INFRASTRUCTURE ENGINEERING INCORPORATED
33 West Monroe | Suite 1540 | Chicago, IL 60603
P 312.425.9560 | F 312.425.9564 | www.infrastructure-eng.com

SHEET NO.38	F.A.I. RTE.	SECTION	COUNTY	TOTAL SHEETS	SHEET NO.
54 SHEETS	280	81-1(HB-2)R	ROCK ISLAND	503	320
			CONTRACT NO. 64815		
	FED. ROAD DIST. NO. _	ILLINOIS	FED. AID PROJECT		

STATE OF ILLINOIS
DEPARTMENT OF TRANSPORTATION

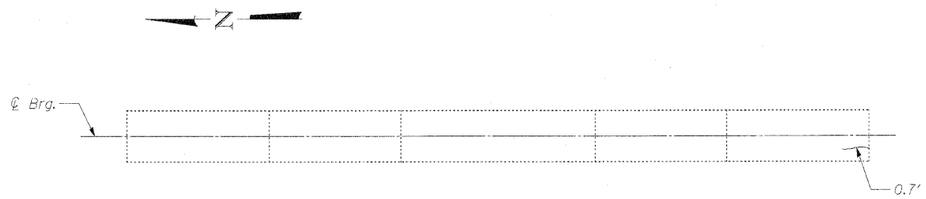

PLAN

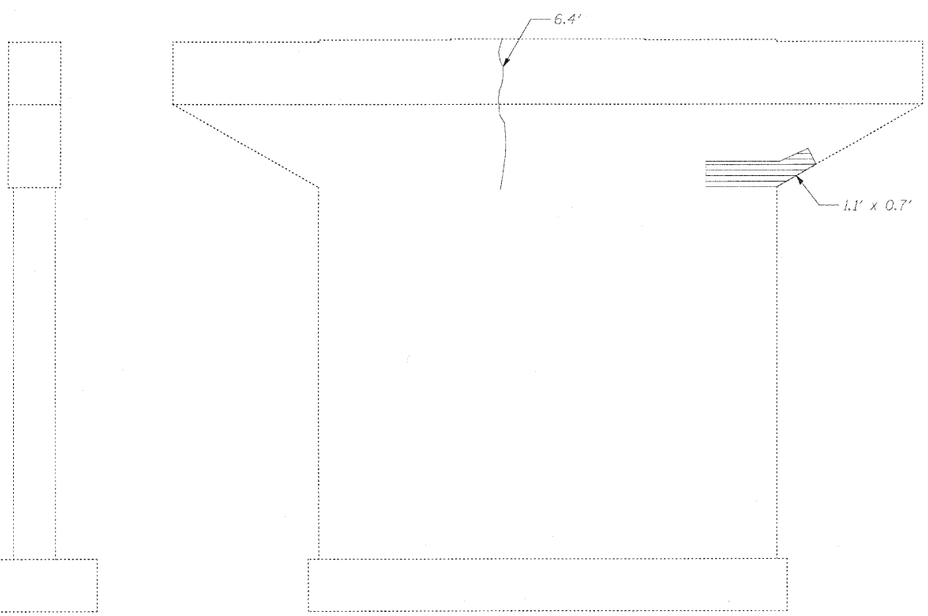

NORTH ELEVATION

(Looking South)

WEST ELEVATION

(Looking East)

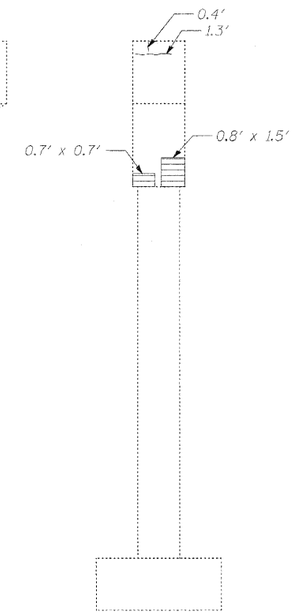

SOUTH ELEVATION

(Looking North)

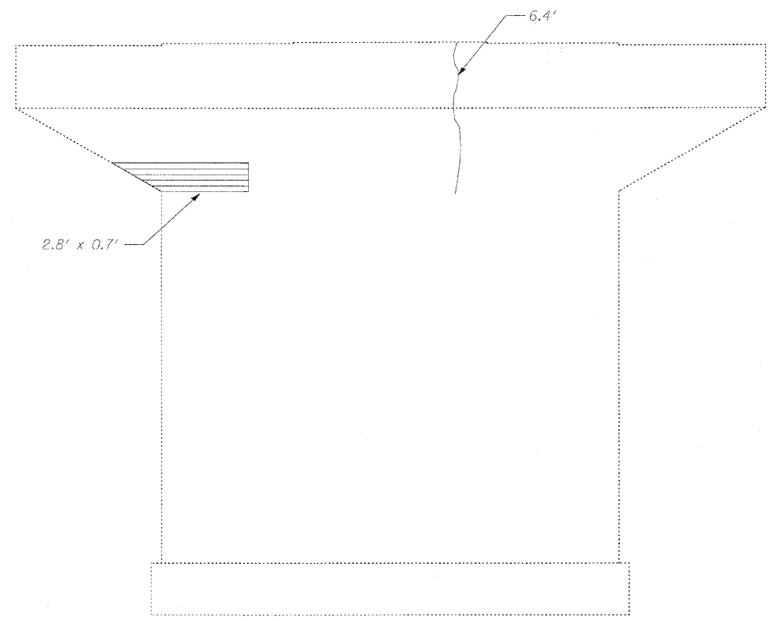

EAST ELEVATION

(Looking West)

BILL OF MATERIAL

ITEM	UNIT	QUANTITY
Epoxy Crack Injection	Foot	15
Structural Repair of Concrete (Depth Equal to or Less Than 5 Inches)	Sq. Ft.	4

PIER 2 REPAIRS
STRUCTURE NO. 081-0022 (E.B.)
STRUCTURE NO. 081-0022 (W.B.)

DESIGNED	
CHECKED	
DRAWN	ASJ
CHECKED	SPK

Note:
Repair of the existing pier shall include but not be limited to the areas shown. The actual areas to be repaired will be determined by the Engineer at the time of construction.

Indicates limits of Structural Repair of Concrete (Depth Equal to or Less Than 5 Inches)

Indicates limits of Epoxy Crack Injection

INFRASTRUCTURE ENGINEERING | INCORPORATED
33 West Monroe | Suite 1540 | Chicago, IL 60603
P 312.425.9560 | F 312.425.9564 | www.infrastructure-eng.com

SHEET NO. 39	F.A.I. RTE.	SECTION	COUNTY	TOTAL SHEETS	SHEET NO.
54 SHEETS	280	81-1(HB-2)R	ROCK ISLAND	503	321
			CONTRACT NO. 64815		
	FED. ROAD DIST. NO. _	ILLINOIS	FED. AID PROJECT		

STATE OF ILLINOIS
DEPARTMENT OF TRANSPORTATION

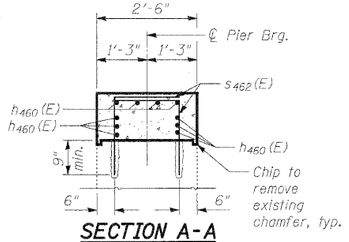

SECTION A-A

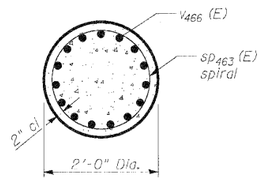

SECTION B-B

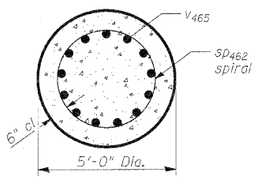

SECTION C-C

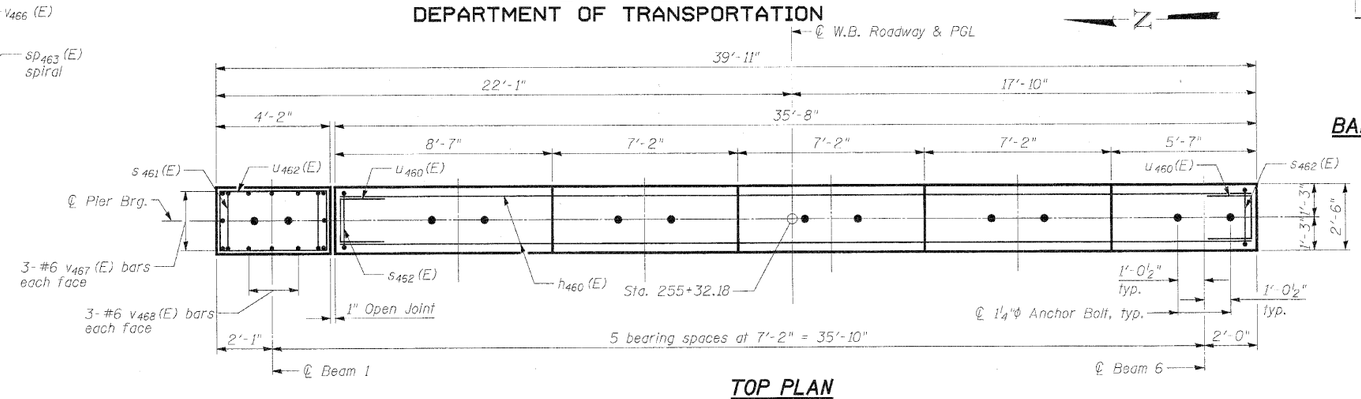

TOP PLAN

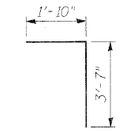

BAR s_{462} (E)

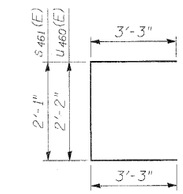

BARS s_{461} (E) & u_{460} (E)

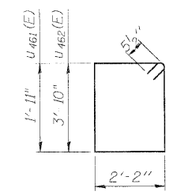

BARS u_{461} (E) & u_{462} (E)

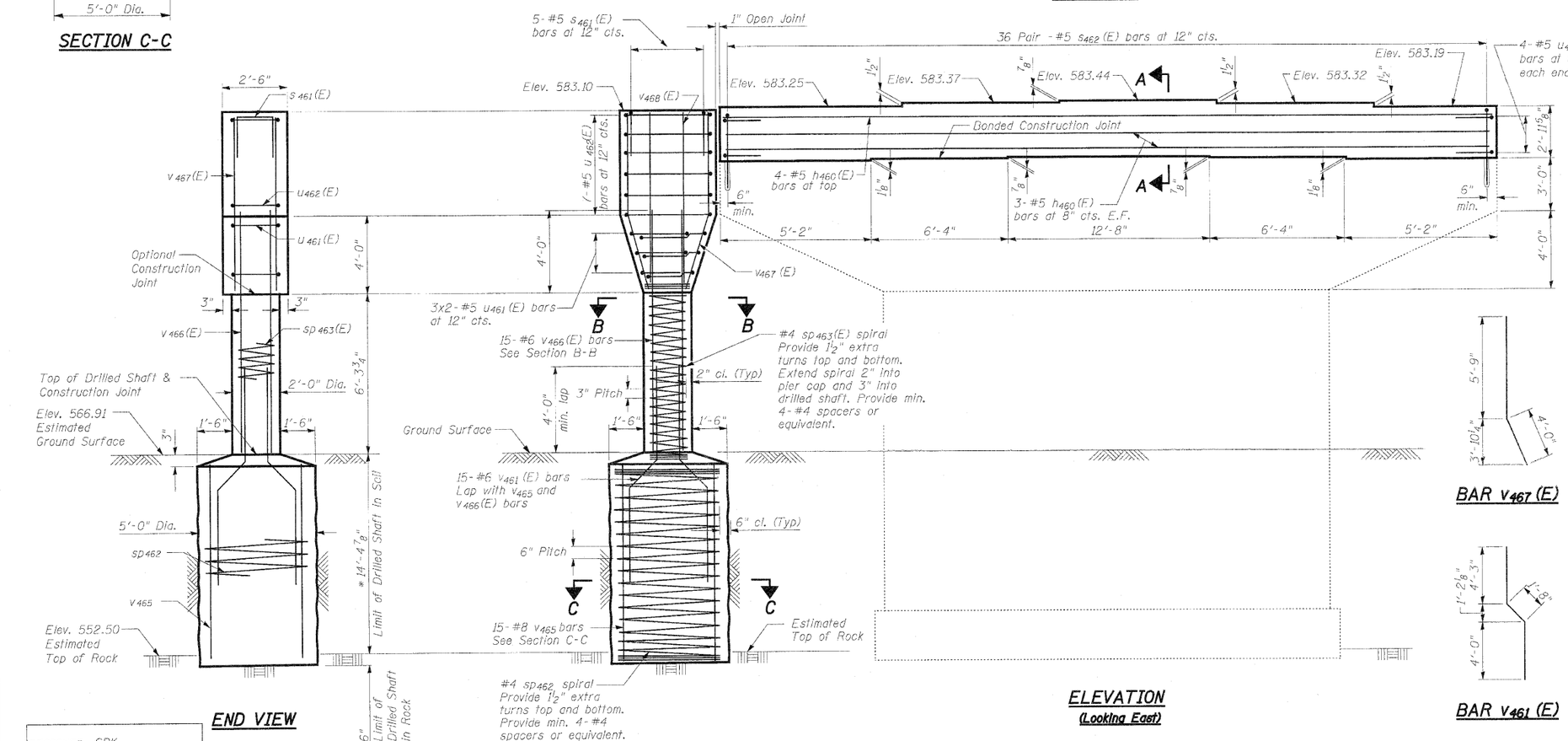

END VIEW

ELEVATION
(Looking East)

BAR v_{467} (E)

BAR v_{461} (E)

BILL OF MATERIAL

Bar	No.	Size	Length	Shape
h_{460} (E)	10	#5	35'-4"	
s_{461} (E)	5	#5	8'-7"	
s_{462} (E)	72	#5	5'-5"	
** sp_{462}	1	#4	14'-3"	
** sp_{463} (E)	1	#4	6'-9"	
u_{460} (E)	8	#5	8'-8"	
u_{461} (E)	6	#5	9'-1"	
u_{462} (E)	7	#5	12'-11"	
v_{461} (E)	15	#6	9'-11"	
v_{465}	15	#8	14'-3"	
v_{466} (E)	15	#6	10'-2"	
v_{467} (E)	6	#6	9'-9"	
v_{468} (E)	6	#6	9'-7"	
Concrete Structures			Cu. Yd.	14.0
Reinforcement Bars, Epoxy Coated			Pound	1780
Reinforcement Bars			Pounds	860
Drilled Shaft in Soil			Cu. Yd.	10.4
Drilled Shaft in Rock			Cu. Yd.	0.4
Concrete Sealer			Sq. Ft.	475

Allowable Soil Bearing Pressure is 10,000 psf on sound rock.
Cast Steps monolithically with cap.
Space cap reinforcement to miss anchor bolts.
Minimum lap for spirals = 2'-0"
Epoxy grout s_{462} (E) bars in 9" (min.) drilled holes. See Section 584 of the Standard Specifications. Cost of hole drilling and epoxy grouting is included with Reinforcement Bars, Epoxy Coated.
** Length is height of spiral.

* The quantities and reinforcement detailing are based on the top of shaft and the estimated top of rock elevations shown and may change based on the actual top of rock elevation encountered and the final top of shaft elevation.

PIER 2 WIDENING
STRUCTURE NO. 081-0022 (E.B.)
STRUCTURE NO. 081-0023 (W.B.)

DESIGNED	SPK
CHECKED	LAN
DRAWN	ASJ
CHECKED	SPK

INFRASTRUCTURE ENGINEERING | INCORPORATED
33 West Monroe | Suite 1540 | Chicago, IL 60603
P 312.425.9560 | F 312.425.9564 | www.infrastructure-eng.com

SHEET NO. 40	F.A.I. RTE.	SECTION	COUNTY	TOTAL SHEETS	SHEET NO.
54 SHEETS	280	81-1(HB-2)R	ROCK ISLAND	503	322
			CONTRACT NO. 64815		
	FED. ROAD DIST. NO. _	ILLINOIS	FED. AID PROJECT		

STATE OF ILLINOIS
DEPARTMENT OF TRANSPORTATION

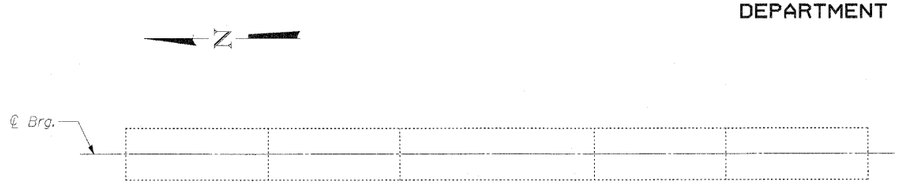

PLAN

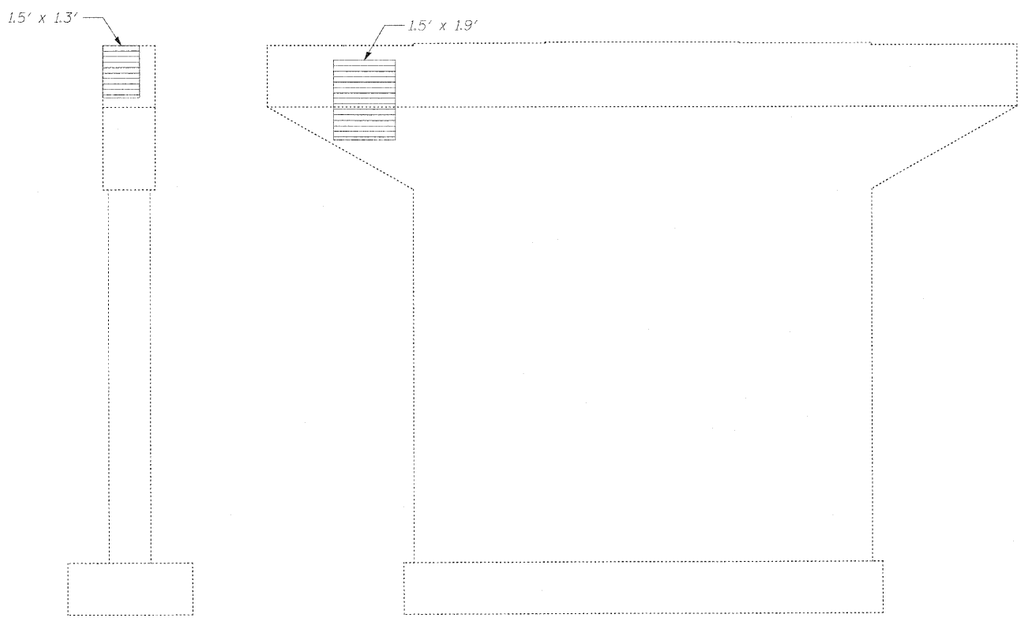

NORTH ELEVATION
(Looking South)

WEST ELEVATION
(Looking East)

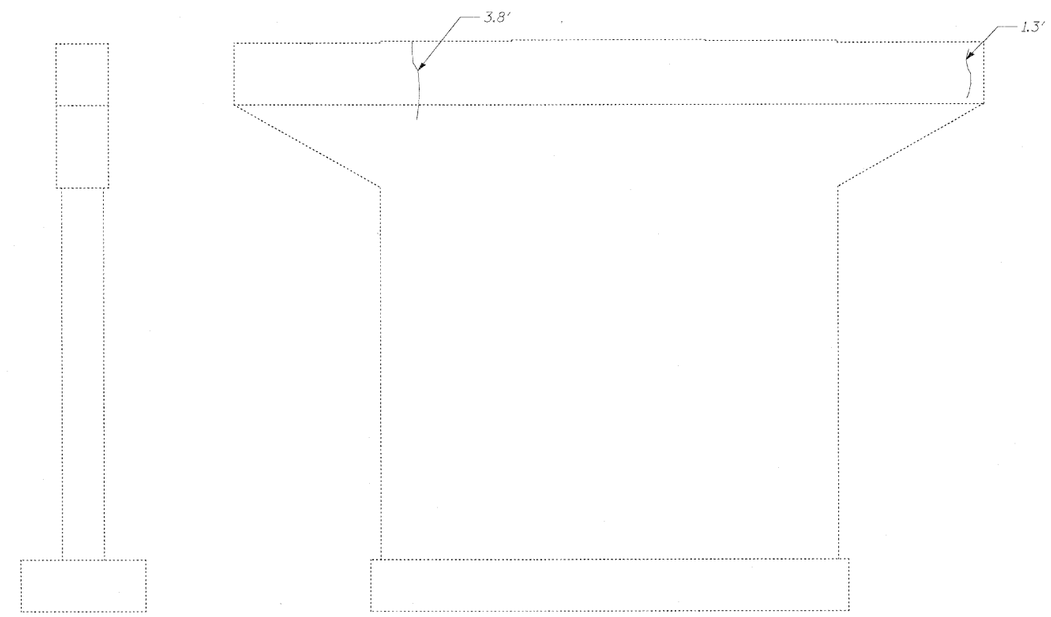

SOUTH ELEVATION
(Looking North)

EAST ELEVATION
(Looking West)

BILL OF MATERIAL

ITEM	UNIT	QUANTITY
Epoxy Crack Injection	Foot	5
Structural Repair of Concrete (Depth Equal to or Less Than 5 Inches)	Sq. Ft.	5

PIER 3 REPAIRS
STRUCTURE NO. 081-0022 (E.B.)
STRUCTURE NO. 081-0022 (W.B.)

DESIGNED	
CHECKED	
DRAWN	ASJ
CHECKED	SPK

Note:
Repair of the existing pier shall include but not be limited to the areas shown. The actual areas to be repaired will be determined by the Engineer at the time of construction.

Indicates limits of Structural Repair of Concrete (Depth Equal to or Less Than 5 Inches)

Indicates limits of Epoxy Crack Injection

INFRASTRUCTURE ENGINEERING | INCORPORATED
33 West Monroe | Suite 1540 | Chicago, IL 60603
P 312.425.9560 | F 312.425.9564 | www.infrastructure-eng.com

SHEET NO. 41	F.A.I. RTE.	SECTION	COUNTY	TOTAL SHEETS	SHEET NO.
54 SHEETS	280	81-1(HB-2)R	ROCK ISLAND	503	323
			CONTRACT NO. 64815		
	FED. ROAD DIST. NO. _	ILLINOIS	FED. AID PROJECT		

STATE OF ILLINOIS
DEPARTMENT OF TRANSPORTATION

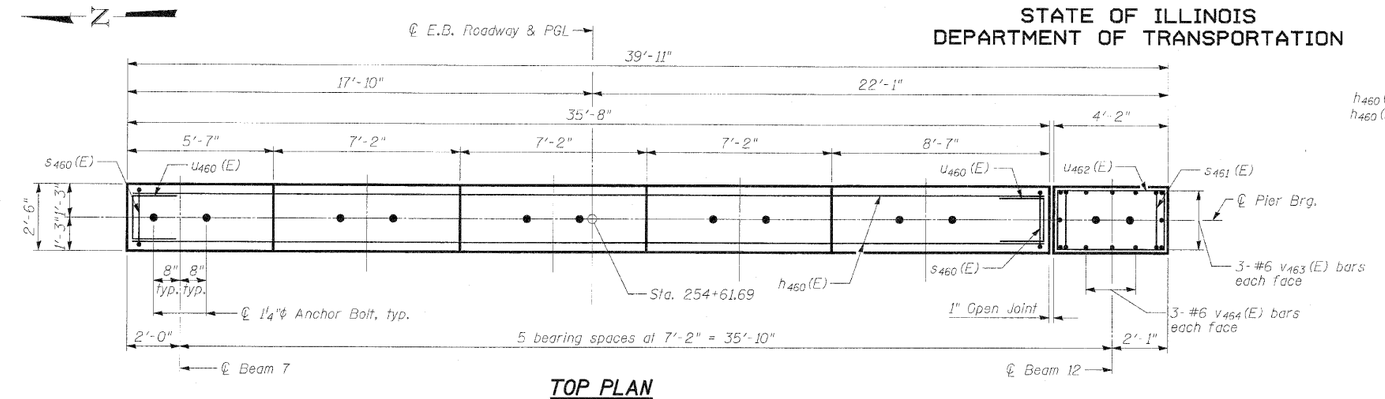

TOP PLAN

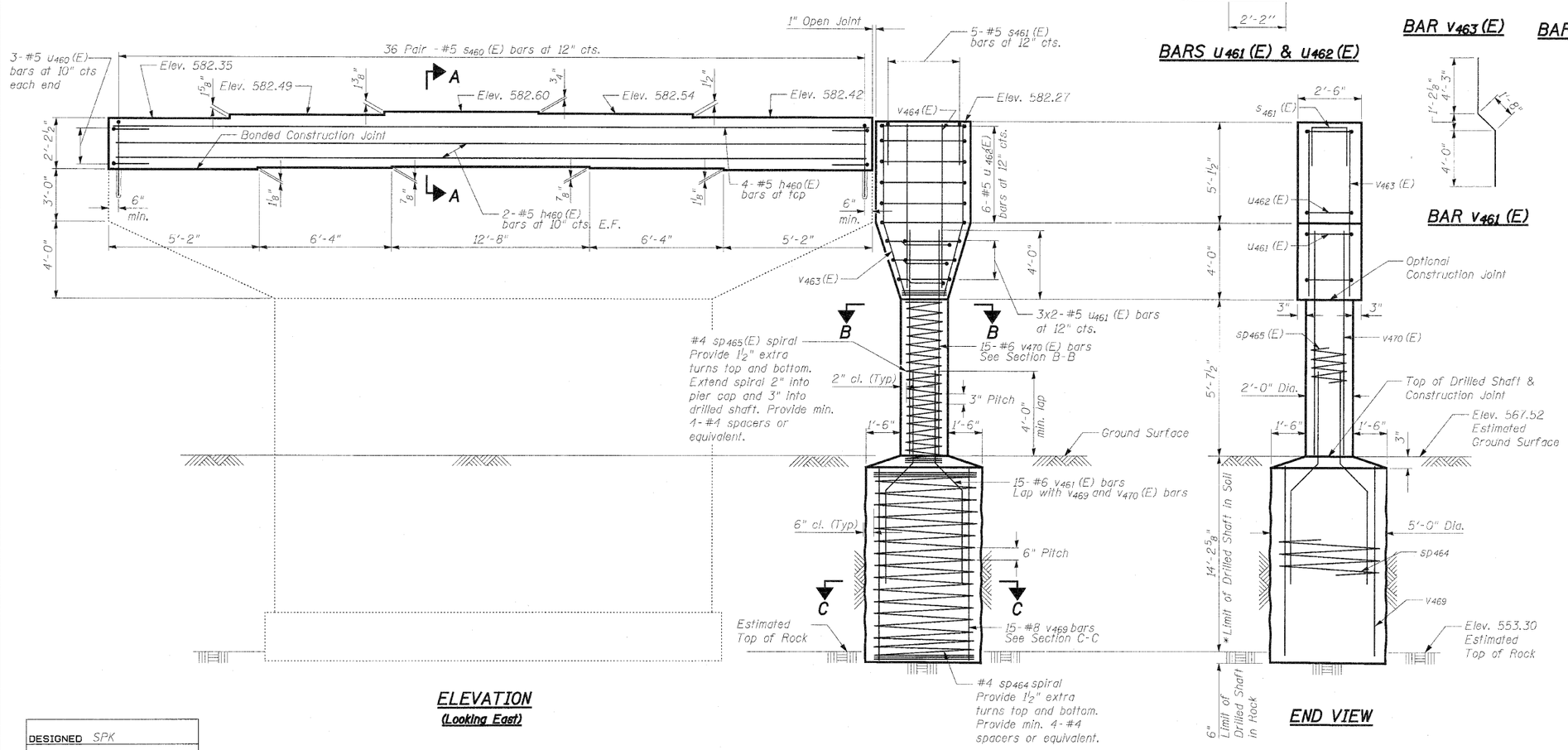

ELEVATION
(Looking East)

END VIEW

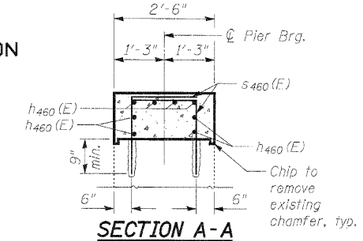

SECTION A-A

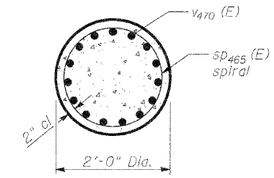

SECTION B-B

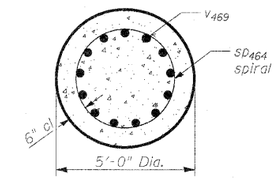

SECTION C-C

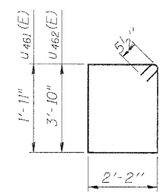

BARS u461 (E) & u462 (E)

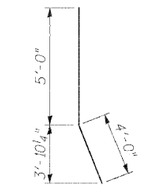

BAR v463 (E)

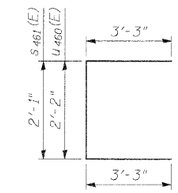

BARS s461 (E) & u460 (E)

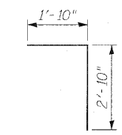

BAR s460 (E)

BAR v461 (E)

BILL OF MATERIAL

Bar	No.	Size	Length	Shape
h460 (E)	8	#5	35'-4"	
s460 (E)	72	#5	4'-8"	
s461 (E)	5	#5	8'-7"	
** sp464	1	#4	14'-1"	
** sp465 (F)	1	#4	6'-1"	
u460 (E)	6	#5	8'-8"	
u461 (E)	6	#5	9'-1"	
u462 (E)	6	#5	12'-11"	
v461 (E)	15	#6	9'-11"	
v463 (E)	6	#6	9'-0"	
v464 (E)	6	#6	8'-10"	
v469	15	#8	14'-1"	
v470 (E)	15	#6	9'-6"	
Concrete Structures			Cu. Yd.	11.1
Reinforcement Bars, Epoxy Coated			Pound	1580
Reinforcement Bars			Pounds	850
Drilled Shaft in Soil			Cu. Yd.	10.3
Drilled Shaft in Rock			Cu. Yd.	0.4
Concrete Sealer			Sq. Ft.	406

Allowable Soil Bearing Pressure is 10,000 psf on sound rock.
Cast Steps monolithically with cap.
Space cap reinforcement to miss anchor bolts.
Minimum lap for spirals = 2'-0"
Epoxy grout s460 (E) bars in 9" (min.) drilled holes. See Section 584 of the Standard Specifications. Cost of hole drilling and epoxy grouting is included with Reinforcement Bars, Epoxy Coated.
** Length is height of spiral.

PIER 3 WIDENING
STRUCTURE NO. 081-0022 (E.B.)
STRUCTURE NO. 081-0023 (W.B.)

DESIGNED	SPK
CHECKED	LAN
DRAWN	ASJ
CHECKED	SPK

* The quantities and reinforcement detailing are based on the top of shaft and the estimated top of rock elevations shown and may change based on the actual top of rock elevation encountered and the final top of shaft elevation.

INFRASTRUCTURE ENGINEERING INCORPORATED
33 West Monroe | Suite 1540 | Chicago, IL 60603
P 312.425.9560 | F 312.425.9564 | www.infrastructure-eng.com

SHEET NO. 42	F.A.I. RTE.	SECTION	COUNTY	TOTAL SHEETS	SHEET NO.
54 SHEETS	280	81-1(HB-2)R	ROCK ISLAND	503	324
			CONTRACT NO. 64815		
	FED. ROAD DIST. NO. _	ILLINOIS	FED. AID PROJECT		

P:\P-05\1719\DGN\Sheets\US 67 Final Plans\0810022-64815-042-Pier 3.dgn
12:08:31 PM
7/22/2010
1719

STATE OF ILLINOIS
DEPARTMENT OF TRANSPORTATION

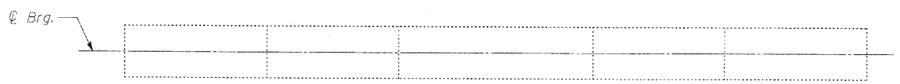

PLAN

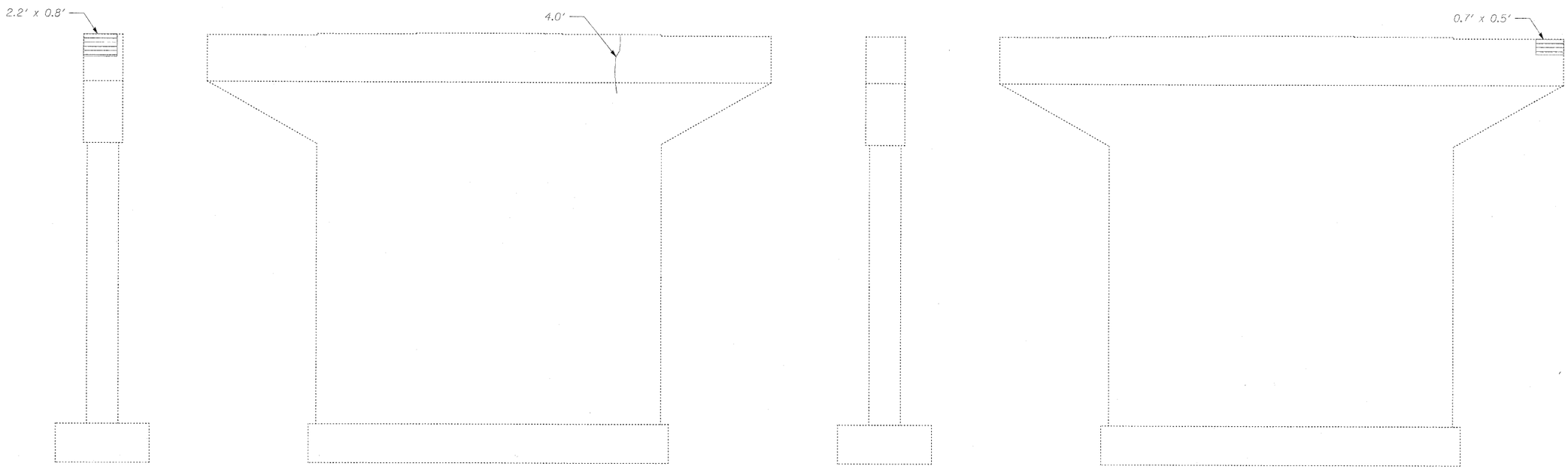

NORTH ELEVATION
(Looking South)

WEST ELEVATION
(Looking East)

SOUTH ELEVATION
(Looking North)

EAST ELEVATION
(Looking West)

BILL OF MATERIAL

ITEM	UNIT	QUANTITY
Epoxy Crack Injection	Foot	4
Structural Repair of Concrete (Depth Equal to or Less Than 5 Inches)	Sq. Ft.	2

PIER 4 REPAIRS
STRUCTURE NO. 081-0022 (E.B.)
STRUCTURE NO. 081-0022 (W.B.)

DESIGNED	
CHECKED	
DRAWN	ASJ
CHECKED	SPK

Note:
Repair of the existing pier shall include but not be limited to the areas shown. The actual areas to be repaired will be determined by the Engineer at the time of construction.

Indicates limits of Structural Repair of Concrete (Depth Equal to or Less Than 5 Inches)

Indicates limits of Epoxy Crack Injection

INFRASTRUCTURE ENGINEERING, INCORPORATED
33 West Monroe | Suite 1540 | Chicago, IL 60603
P 312.425.9560 | F 312.425.9564 | www.infrastructure-eng.com

SHEET NO. 43	F.A.I. RTE.	SECTION	COUNTY	TOTAL SHEETS	SHEET NO.
54 SHEETS	280	81-1(HB-2)R	ROCK ISLAND	503	325
			CONTRACT NO. 64815		
	FED. ROAD DIST. NO. _	ILLINOIS	FED. AID PROJECT		

STATE OF ILLINOIS
DEPARTMENT OF TRANSPORTATION

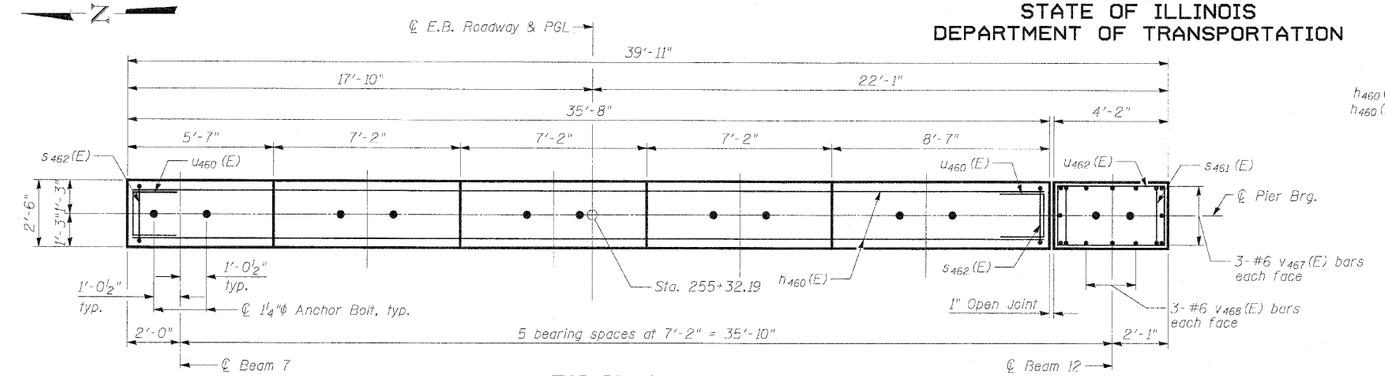

TOP PLAN

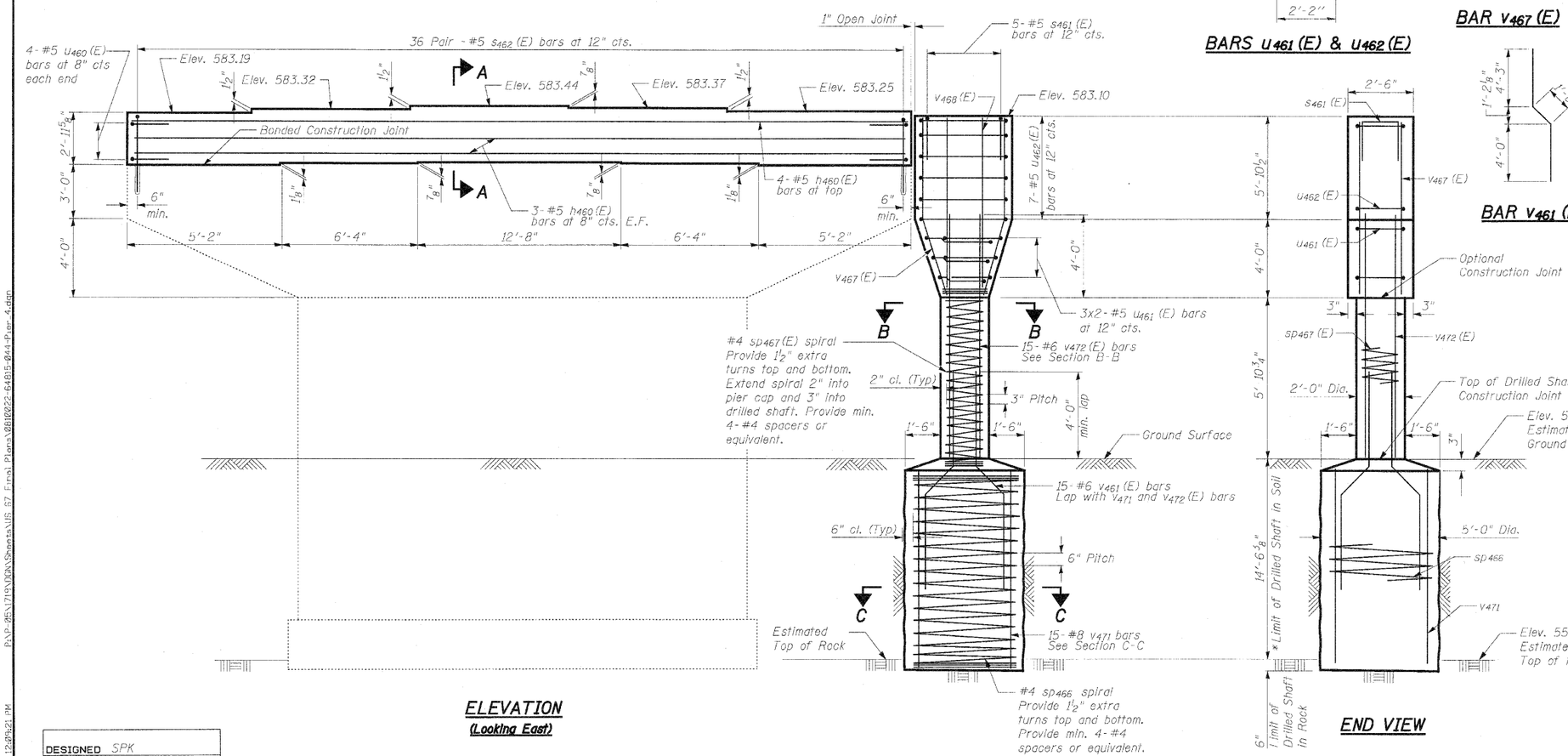

ELEVATION
(Looking East)

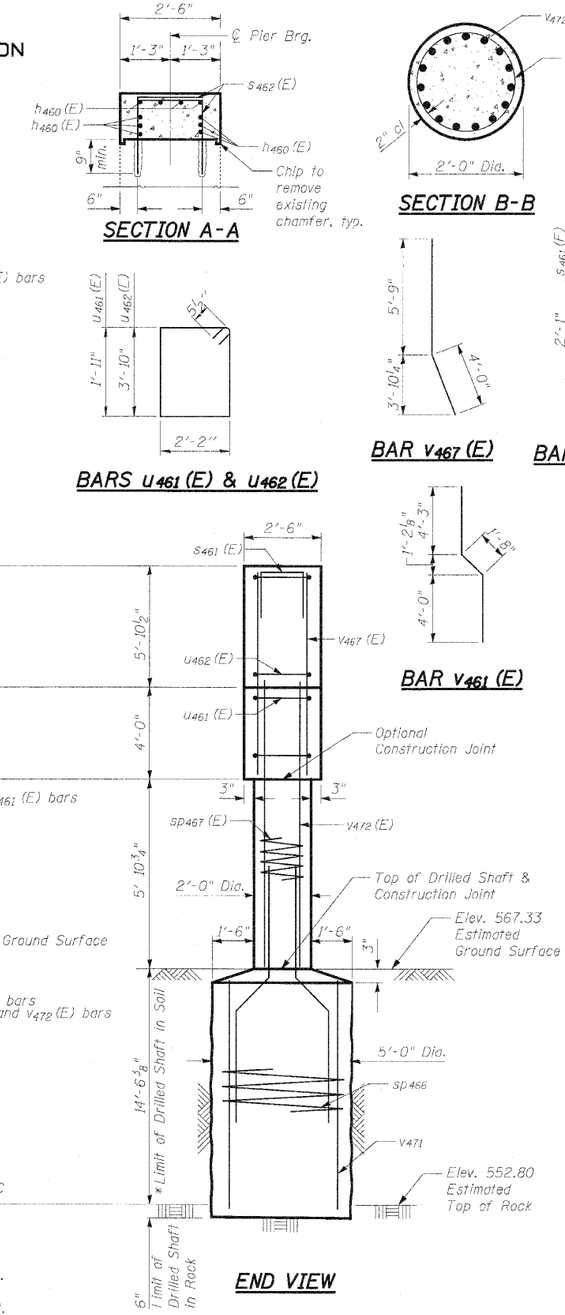

END VIEW

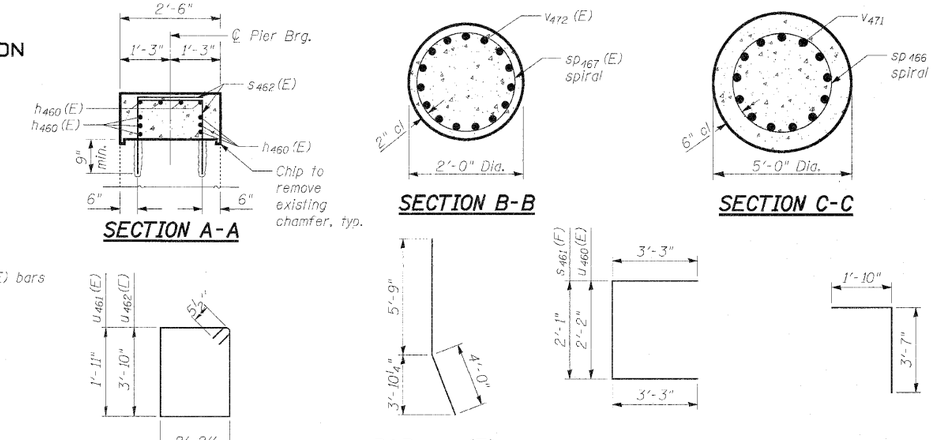

BILL OF MATERIAL

Bar	No.	Size	Length	Shape
h460 (E)	10	#5	35'-4"	
s461 (E)	5	#5	8'-7"	
s462 (E)	72	#5	5'-5"	
** sp466	1	#4	14'-5"	
** sp467 (E)	1	#4	6'-4"	
u460 (E)	8	#5	8'-8"	
u461 (E)	6	#5	9'-1"	
u462 (E)	7	#5	12'-11"	
v461 (E)	15	#6	9'-11"	
v467 (E)	6	#6	9'-9"	
v468 (E)	6	#6	9'-7"	
v471	15	#8	14'-5"	
v472 (E)	15	#6	9'-9"	
Concrete Structures			Cu. Yd.	13.9
Reinforcement Bars, Epoxy Coated			Pound	1760
Reinforcement Bars			Pounds	870
Drilled Shaft in Soil			Cu. Yd.	10.5
Drilled Shaft in Rock			Cu. Yd.	0.4
Concrete Sealer			Sq. Ft.	472

Allowable Soil Bearing Pressure is 10,000 psf on sound rock.
Cast Steps monolithically with cap.
Space cap reinforcement to miss anchor bolts.
Minimum lap for spirals = 2'-0"
Epoxy grout s462 (E) bars in 9" (min.) drilled holes.
See Section 584 of the Standard Specifications.
Cost of hole drilling and epoxy grouting is included with Reinforcement Bars, Epoxy Coated.
** Length is height of spiral.

PIER 4 WIDENING
STRUCTURE NO. 081-0022 (E.B.)
STRUCTURE NO. 081-0023 (W.B.)

DESIGNED	SPK
CHECKED	LAN
DRAWN	ASJ
CHECKED	SPK

* The quantities and reinforcement detailing are based on the top of shaft and the estimated top of rock elevations shown and may change based on the actual top of rock elevation encountered and the final top of shaft elevation.

INFRASTRUCTURE ENGINEERING | INCORPORATED
33 West Monroe | Suite 1540 | Chicago, IL 60603
P 312.425.9560 | F 312.425.9564 | www.infrastructure-eng.com

SHEET NO. 44	F.A.I. RTE.	SECTION	COUNTY	TOTAL SHEETS	SHEET NO.
54 SHEETS	280	81-1(HB-2)R	ROCK ISLAND	503	326
			CONTRACT NO. 64815		
	FED. ROAD DIST. NO. _	ILLINOIS	FED. AID PROJECT		

STATE OF ILLINOIS
DEPARTMENT OF TRANSPORTATION

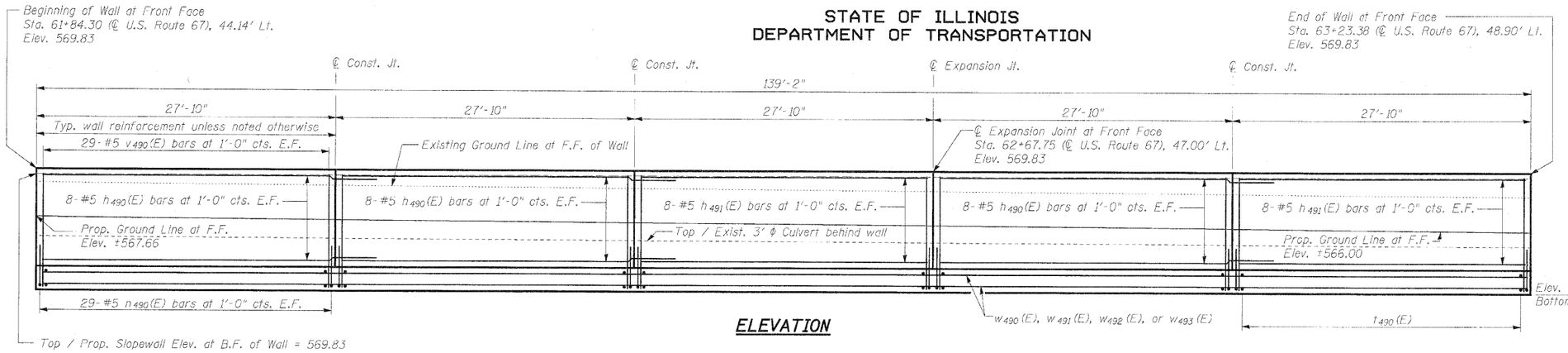

ELEVATION

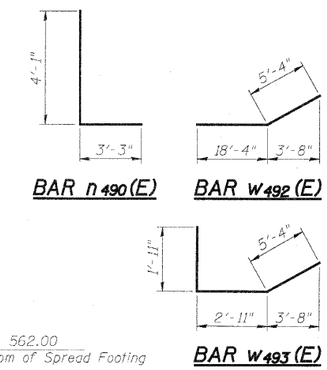

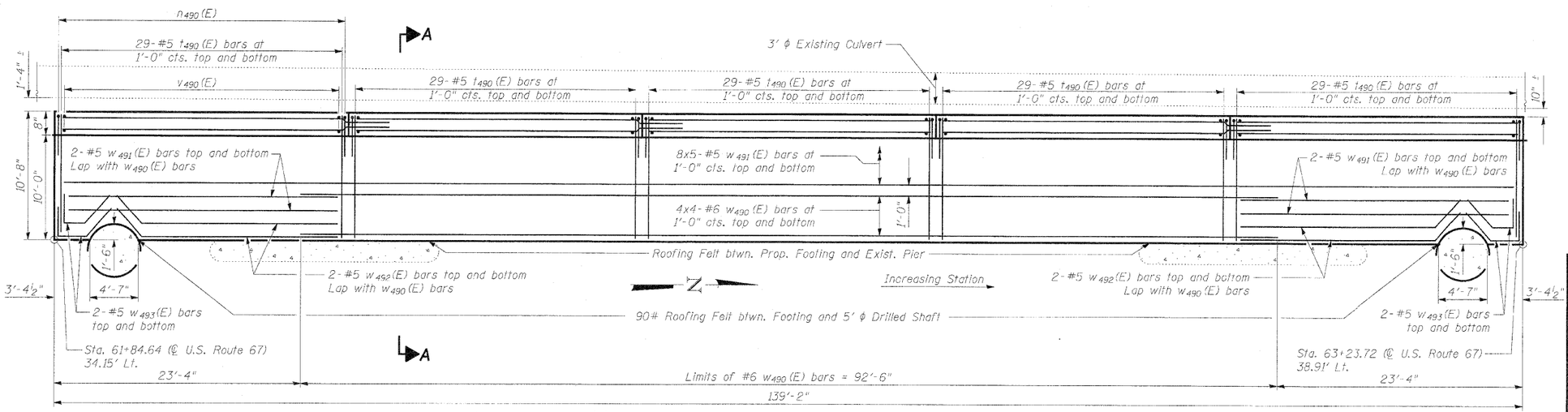

PLAN

Notes:

Footing shall be placed monolithically and shall have no construction joints and no expansion joints.

Cost of Roofing Felt included with Concrete Structures.

BILL OF MATERIAL

Bar	No.	Size	Length	Shape
h490(E)	48	#5	31'-1"	
h491(E)	32	#5	27'-6"	
n490(E)	290	#5	7'-4"	
t490(E)	290	#5	10'-4"	
v490(E)	290	#5	6'-8"	
w490(E)	32	#6	26'-0"	
w491(E)	88	#5	30'-5"	
w492(E)	8	#5	23'-8"	
w493(E)	8	#5	10'-2"	
Structure Excavation			Cu. Yd.	504
Concrete Structures			Cu. Yd.	69.9
Porous Granular Embankment (Special)			Cu. Yd.	31
Reinforcement Bars, Epoxy Coated			Pound	14160
Geocomposite Wall Drain			Sq. Yd.	91
Pipe Underdrains for Structures, 4"			Foot	189

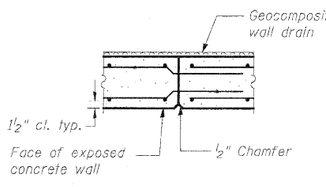

CONSTRUCTION JOINT

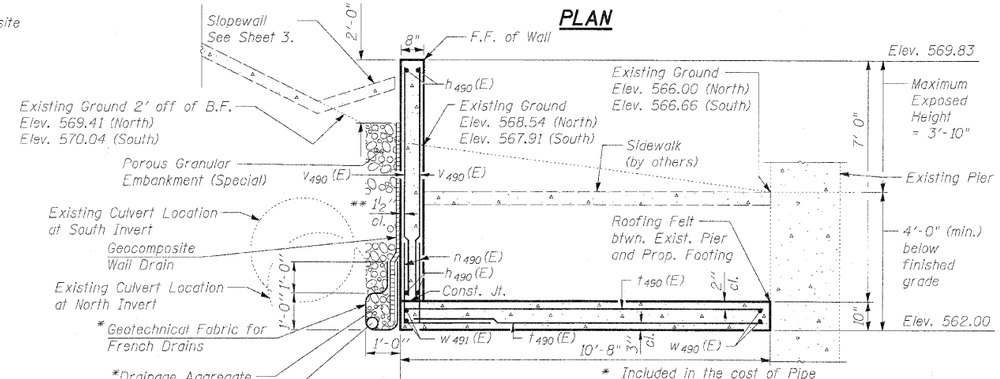

SECTION A-A

* Included in the cost of Pipe Underdrains for Structures, 4".

** v490(E) bars shall not be placed more than 1½" cl. from back face of wall.

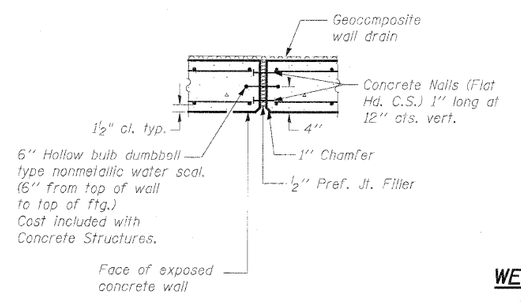

EXPANSION JOINT

DESIGNED	LAN
CHECKED	MMB
DRAWN	LAN
CHECKED	MMB

INFRASTRUCTURE ENGINEERING | INCORPORATED
33 West Monroe | Suite 1540 | Chicago, IL 60603
P 312.425.9560 | F 312.425.9564 | www.infrastructure-eng.com

WEST SLOPE WALL RETAINING WALL
STRUCTURE NO. 081-0022 (E.B.)
STRUCTURE NO. 081-0023 (W.B.)

SHEET NO. 45	F.A.I. RTE.	SECTION	COUNTY	TOTAL SHEETS	SHEET NO.
54 SHEETS	280	81-1(HB-2)R	ROCK ISLAND	503	327
			CONTRACT NO. 64815		
	FED. ROAD DIST. NO. _	ILLINOIS	FED. AID PROJECT		

STATE OF ILLINOIS
DEPARTMENT OF TRANSPORTATION

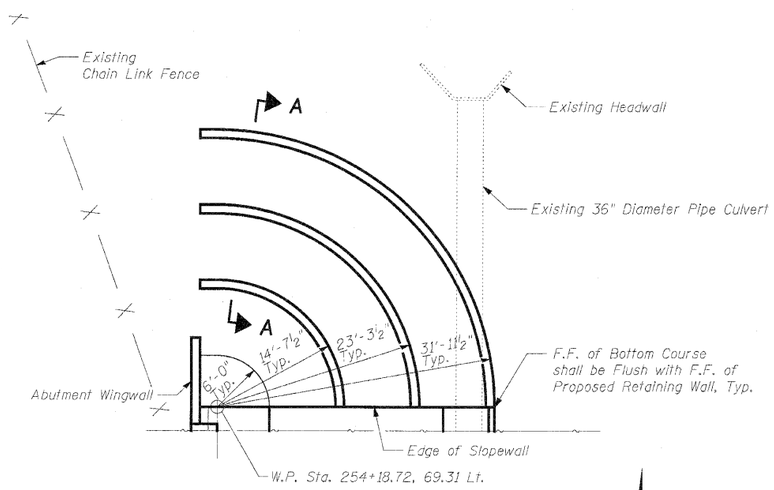

NORTHWEST LANDSCAPE WALL LAYOUT

(Showing Location of Bottom Course of Block)

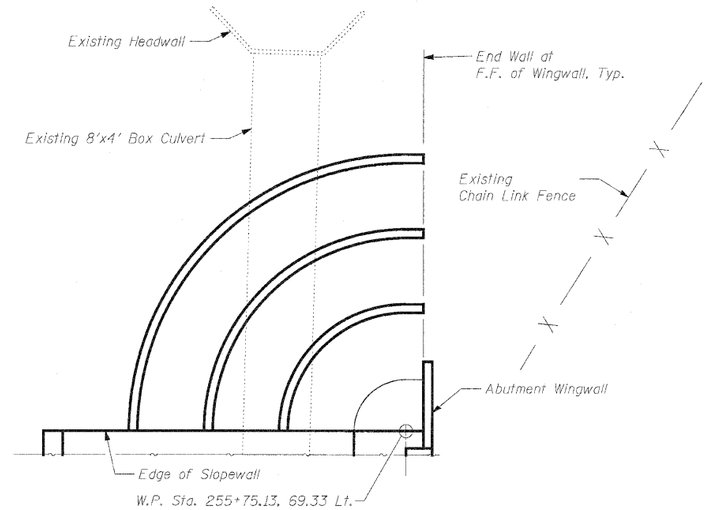

NORTHEAST LANDSCAPE WALL LAYOUT

(Showing Location of Bottom Course of Block)

N

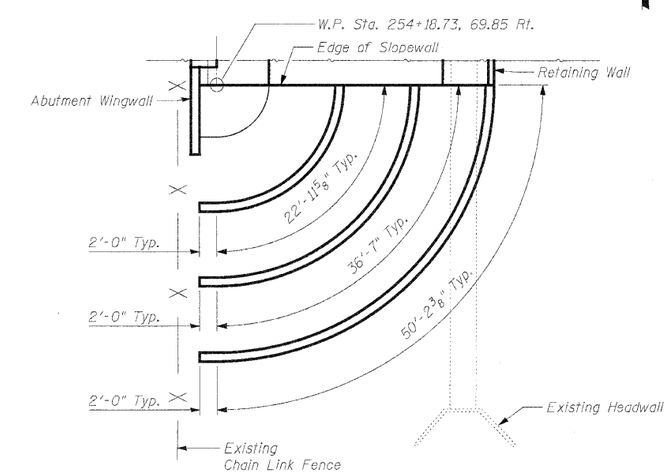

SOUTHWEST LANDSCAPE WALL LAYOUT

(Showing Location of Bottom Course of Block)

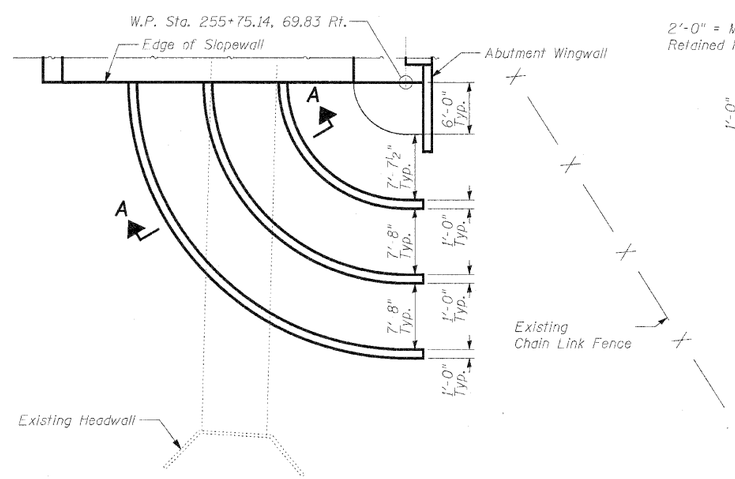

SOUTHEAST LANDSCAPE WALL LAYOUT

(Showing Location of Bottom Course of Block)

Notes:

Contractor to remove existing blocks and store off site. Contractor to reinstall blocks after completion of bridge widening.

Excavate 1'-0" below ground at each wall and place 6" of CA-7 gradation crushed stone and one 6 inch thick block in excavation. Excavation to extend 1'-0" behind wall. Backfill behind wall with CA-7 gradation crushed stone.

Cost of CA-7 crushed stone and non-woven filter fabric envelope are included in the cost of Remove and Reinstall Landscape Block Wall.

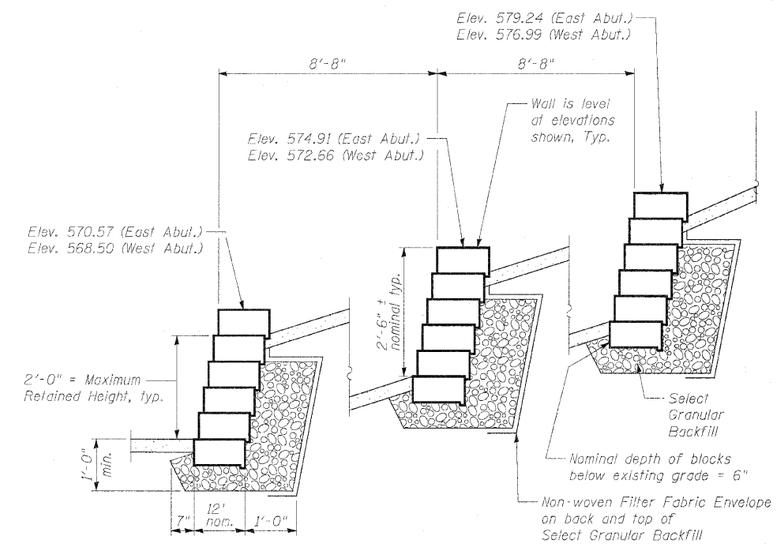

SECTION A-A

For Information Only

BILL OF MATERIAL

Item	Unit	Total
Remove and Reinstall Landscape Block Wall	Sq. Ft.	1390

LANDSCAPE WALLS
STRUCTURE NO. 081-0022 (E.B.)
STRUCTURE NO. 081-0023 (W.B.)

DESIGNED	LAN
CHECKED	MMB
DRAWN	LAN
CHECKED	MMB

INFRASTRUCTURE ENGINEERING INCORPORATED
33 West Monroe | Suite 1540 | Chicago, IL 60603
P 312.425.9560 | F 312.425.9564 | www.infrastructure-eng.com

SHEET NO.46	F.A.I. RTE.	SECTION	COUNTY	TOTAL SHEETS	SHEET NO.
54 SHEETS	280	81-1(HB-2)R	ROCK ISLAND	503	328
			CONTRACT NO. 64815		
	FED. ROAD DIST. NO. _	ILLINOIS	FED. AID PROJECT		

STATE OF ILLINOIS
DEPARTMENT OF TRANSPORTATION

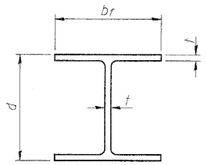

STEEL PILE TABLE

Designation	Depth d	Flange width b_f	Web and Flange thickness t	Encasement diameter A
HP 14x117	14 1/4"	14 7/8"	13/16"	30"
x102	14"	14 3/4"	11/16"	30"
x89	13 7/8"	14 3/4"	5/8"	30"
x73	13 5/8"	14 5/8"	1/2"	30"
HP 12x84	12 1/4"	12 1/4"	11/16"	24"
x74	12 1/8"	12 1/4"	5/8"	24"
x63	12"	12 1/8"	1/2"	24"
x53	11 3/4"	12"	7/16"	24"
HP 10x57	10"	10 1/4"	9/16"	24"
x42	9 3/4"	10 1/8"	7/16"	24"
HP 8x36	8"	8 1/8"	7/16"	18"

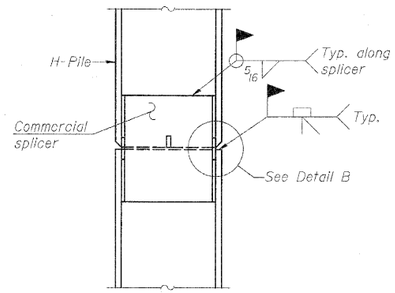

ELEVATION

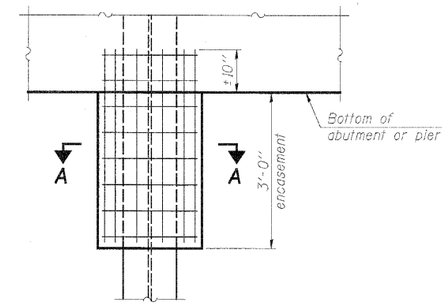

ELEVATION

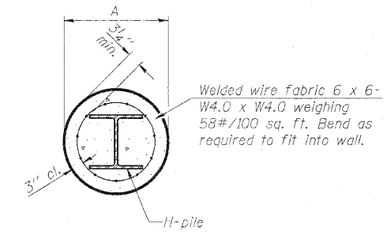

Note:
Forms for encasement may be omitted when soil conditions permit.

SECTION A-A

PILE ENCASEMENT

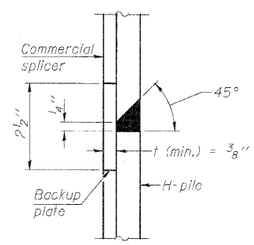

DETAIL "B"

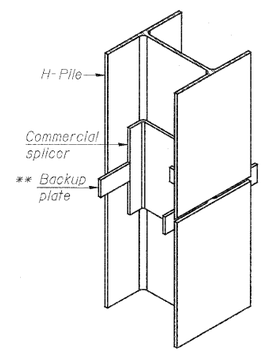

ISOMETRIC VIEW

WELDED COMMERCIAL SPLICE

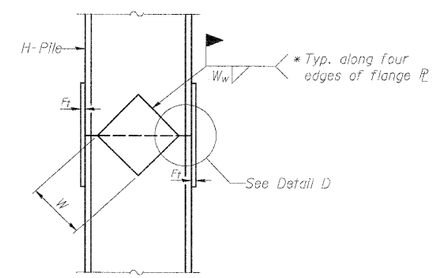

ELEVATION

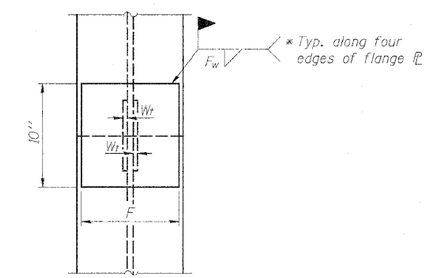

END VIEW

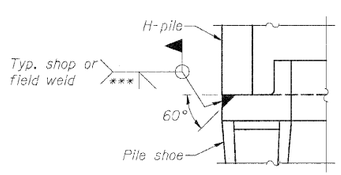

ELEVATION

DETAIL A

H-PILE SHOE ATTACHMENT

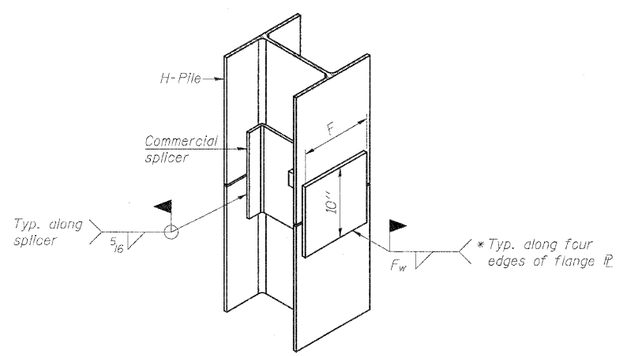

ISOMETRIC VIEW

WELDED COMMERCIAL SPLICE ALTERNATE

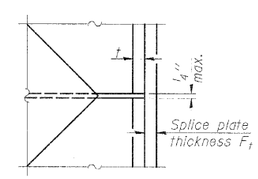

DETAIL D

Designation	F	F_t	F_w	W	W_t	W_w
HP 14x117	12 1/2"	1"	7/8"	7 3/4"	5/8"	1/2"
x102	12 1/2"	7/8"	3/4"	7 3/4"	5/8"	1/2"
x89	12 1/2"	3/4"	11/16"	7 3/4"	5/8"	1/2"
x73	12 1/2"	5/8"	9/16"	7 3/4"	5/8"	1/2"
HP 12x84	10"	7/8"	11/16"	6 1/2"	5/8"	1/2"
x74	10"	7/8"	11/16"	6 1/2"	5/8"	1/2"
x63	10"	5/8"	1/2"	6 1/2"	1/2"	3/8"
x53	10"	5/8"	1/2"	6 1/2"	1/2"	3/8"
HP 10x57	8"	3/4"	9/16"	5 1/4"	1/2"	3/8"
x42	8"	5/8"	9/16"	5 1/4"	1/2"	3/8"
HP 8x36	7"	5/8"	7/16"	4 1/4"	1/2"	3/8"

WELDED PLATE FIELD SPLICE

Note:
The steel H-piles shall be according to AASHTO M270 Grade 50.

* Interrupt welds 1/4" from end of web and/or each flange.

** Remove portions of backup plates that extend outside the flanges.

*** Weld size per pile shoe manufacturer (5/16" min.).

HP PILE DETAILS
STRUCTURE NO. 081-0022 (E.B.)
STRUCTURE NO. 081-0023 (W.B.)

DESIGNED	
CHECKED	-
DRAWN	ASJ
CHECKED	SPK

F-HP 11-1-09

INFRASTRUCTURE ENGINEERING INCORPORATED
33 West Monroe | Suite 1540 | Chicago, IL 60603
P 312.425.9560 | F 312.425.9564 | www.infrastructure-eng.com

SHEET NO. 47	F.A.I. RTE.	SECTION	COUNTY	TOTAL SHEETS	SHEET NO.
54 SHEETS	280	81-1(HB-2)R	ROCK ISLAND	503	329
			CONTRACT NO. 64815		
	FED. ROAD DIST. NO. _	ILLINOIS	FED. AID PROJECT		

STATE OF ILLINOIS
DEPARTMENT OF TRANSPORTATION

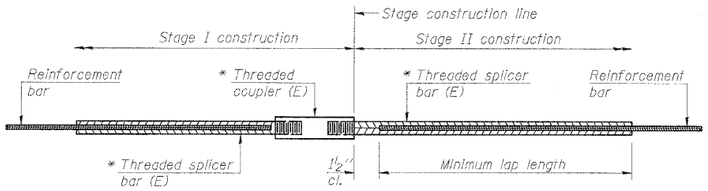

STANDARD BAR SPLICER ASSEMBLY

Minimum Lap Lengths				
Bar size to be spliced	Table 1	Table 2	Table 3	Table 4
3, 4	1'-5"	1'-11"	2'-1"	2'-4"
5	1'-9"	2'-5"	2'-7"	2'-11"
6	2'-1"	2'-11"	3'-1"	3'-6"
7	2'-9"	3'-10"	4'-2"	4'-8"
8	3'-8"	5'-1"	5'-5"	6'-2"
9	4'-7"	6'-5"	6'-10"	7'-9"

Table 1: Black bar, 0.8 Class C
Table 2: Black bar, Top bar lap, 0.8 Class C
Table 3: Epoxy bar, 0.8 Class C
Table 4: Epoxy bar, Top bar lap, 0.8 Class C

Threaded splicer bar length = min. lap length + 1½" + thread length

* Epoxy not required on Bar Splicer Assembly components used in conjunction with black bars.

Location	Bar size	No. assemblies required	Table for minimum lap length

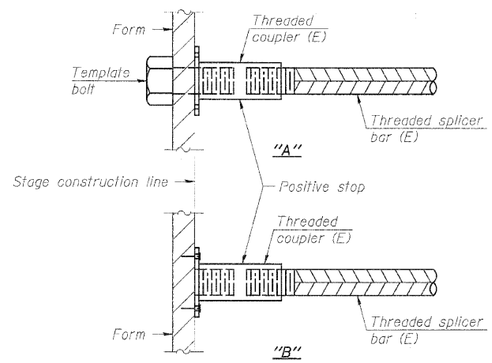

INSTALLATION AND SETTING METHODS

"A" : Set bar splicer assembly by means of a template bolt.
"B" : Set bar splicer assembly by nailing to wood forms or cementing to steel forms.
(E) : Indicates epoxy coating.

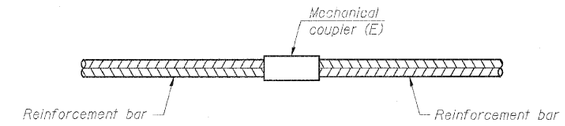

STANDARD MECHANICAL SPLICER

Location	Bar size	No. assemblies required

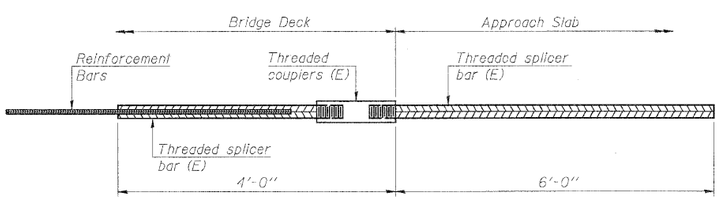

BAR SPLICER ASSEMBLY FOR #5 BAR ON SEMI-INTEGRAL ABUTMENTS

No. required = 184

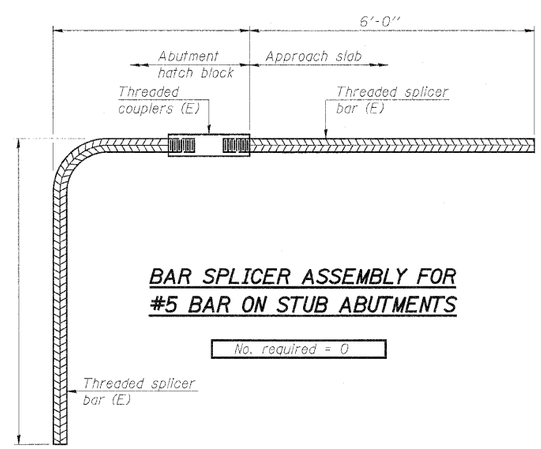

BAR SPLICER ASSEMBLY FOR #5 BAR ON STUB ABUTMENTS

No. required = 0

NOTES

Splicer bars shall be deformed with threaded ends and have a minimum 60 ksi yield strength.

All reinforcement shall be lapped and tied to the splicer bars.

Bar splicer assemblies shall be epoxy coated according to the requirements for reinforcement bars. See Section 508 of the Standard Specifications.

See special provision for Mechanical Splicers.

See approved list of bar splicer assemblies and mechanical splicers for alternatives.

BAR SPLICER ASSEMBLY AND MECHANICAL SPLICER DETAILS
STRUCTURE NO. 081-0022 (E.B.)
STRUCTURE NO. 081-0023 (W.B.)

DESIGNED	-
CHECKED	-
DRAWN	ASJ
CHECKED	SPK

BSD-1 11-1-09

INFRASTRUCTURE ENGINEERING INCORPORATED
33 West Monroe | Suite 1540 | Chicago, IL 60603
P 312.425.9560 | F 312.425.9564 | www.infrastructure-eng.com

SHEET NO. 48	F.A.I. RTE.	SECTION	COUNTY	TOTAL SHEETS	SHEET NO.
54 SHEETS	280	81-1(HB-2)R	ROCK ISLAND	503	330
			CONTRACT NO. 64815		
	FED. ROAD DIST. NO. _	ILLINOIS	FED. AID PROJECT		

STATE OF ILLINOIS
DEPARTMENT OF TRANSPORTATION

Notes:

When cantilever forming brackets are used, the work shall be done according to Article 503.06(b) of the Standard Specifications, except as modified below and in the details shown on this sheet.

The finishing machine rails shall be placed on the top flange of the exterior beams.

The beams or girders, supporting cantilever forming brackets, shall be tied together at 4 foot intervals.

For Standard construction, or Stage Construction the Hardwood bracing materials shall be placed as shown between webs of beams in each bay.

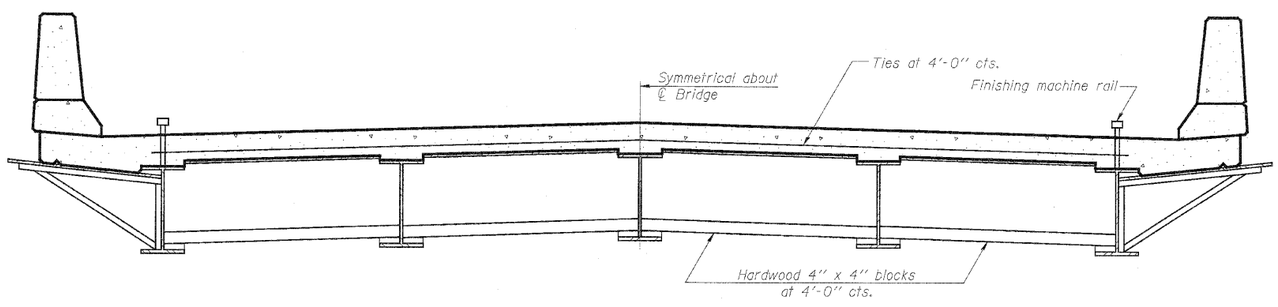

FORM BRACES FOR STANDARD CONSTRUCTION

CANTILEVER FORMING BRACKETS FOR SUPERSTRUCTURES WITH W27 BEAMS AND SMALLER
STRUCTURE NO. 081-0022 (E.B.)
STRUCTURE NO. 081-0023 (W.B.)

DESIGNED	
CHECKED	-
DRAWN	ASJ
CHECKED	SPK

SB-1 11-1-09

INFRASTRUCTURE ENGINEERING | INCORPORATED
33 West Monroe | Suite 1540 | Chicago, IL 60603
P 312.425.9560 | F 312.425.9564 | www.infrastructure-eng.com

SHEET NO. 49	F.A.I. RTE.	SECTION	COUNTY	TOTAL SHEETS	SHEET NO.
54 SHEETS	280	81-1(HB-2)R	ROCK ISLAND	503	331
			CONTRACT NO. 64815		
	FED. ROAD DIST. NO. _	ILLINOIS	FED. AID PROJECT		

STATE OF ILLINOIS
DEPARTMENT OF TRANSPORTATION

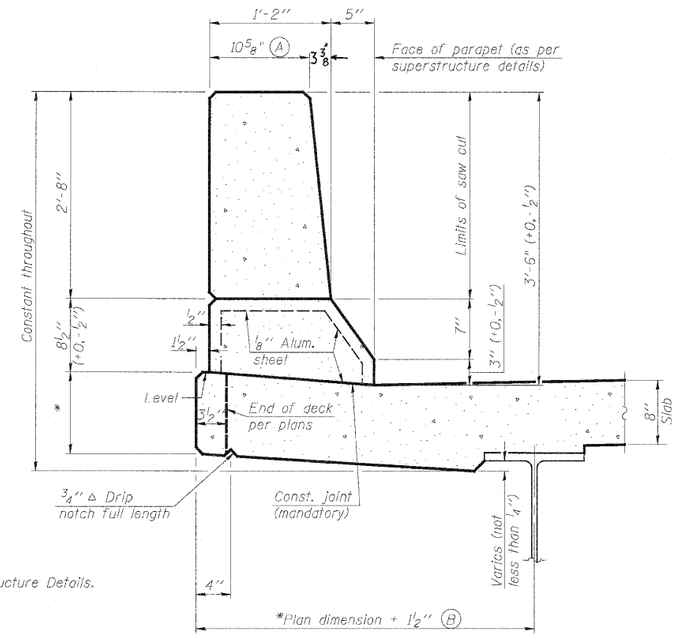

* See Superstructure Details.

SECTION
(Showing dimensions)

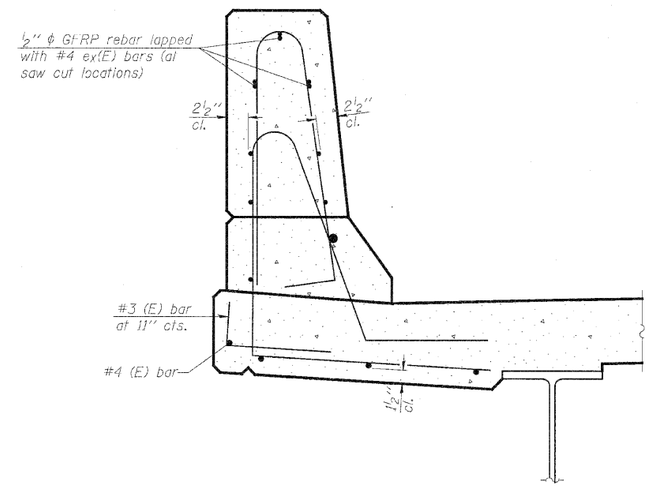

SECTION
(Showing reinforcement clearances for slip forming and additional reinforcement bars)

GENERAL NOTES

All dimensions shall remain the same as shown on superstructure details, except dimensions A and B which are to be revised as shown to provide additional clearance. Additional concrete needed to revise dimension A and B = 0.0218 cu. yds./ft. of parapet.

Place aluminum sheet in curb portion at and near piers. Full thickness saw cut at all joint locations in lieu of cork joint filler.

Steel superstructure shown. Other superstructure types similar.

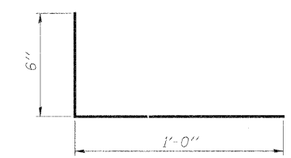

#3 (E) BAR

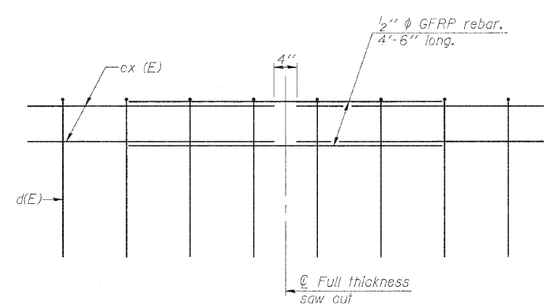

GFRP REBAR STIFFENING DETAIL
(Place as shown in parapet section at each parapet joint location.)

CONCRETE PARAPET
SLIPFORMING OPTION
STRUCTURE NO. 081-0022 (E.B.)
STRUCTURE NO. 081-0023 (W.B.)

DESIGNED	
CHECKED	-
DRAWN	ASJ
CHECKED	SPK

INFRASTRUCTURE ENGINEERING | INCORPORATED
33 West Monroe | Suite 1540 | Chicago, IL 60603
P 312.425.9560 | F 312.425.9564 | www.infrastructure-eng.com

SHEET NO. 50	F.A.I. RTE.	SECTION	COUNTY	TOTAL SHEETS	SHEET NO.
54 SHEETS	280	81-1(HB-2)R	ROCK ISLAND	503	332
			CONTRACT NO. 64815		
	FED. ROAD DIST. NO. _	ILLINOIS	FED. AID PROJECT		

STATE OF ILLINOIS
DEPARTMENT OF TRANSPORTATION

Illinois Department of Transportation
Division of Highways
IDOT

SOIL BORING LOG

Page 1 of 1

Date 2/23/06

ROUTE FAI 280 DESCRIPTION P92-045-02 I-280 over US 67 Bridge, 3/4 m. S. of Rock River LOGGED BY W. Garza

SECTION 81-1VB & 81-1-HB-1 & 2 LOCATION Blackhawk Twp. - 23 SE, SEC. , TWP. 17N, RNG. 2W

COUNTY Rock Island DRILLING METHOD Hollow Stem Auger HAMMER TYPE B-53 Diedrich Automatic

STRUCT. NO.
Station

BORING NO. B-1c
Station 254+77
Offset 69.00ft Rt CL
Ground Surface Elev. 567.0 ft

Surface Water Elev. ft
Stream Bed Elev. ft

Groundwater Elev.:
First Encounter ft
Upon Completion ft
After Hrs. ft

Description	Elev.	DEPTH (ft)	BLOWS (/6")	UCS Qu (tsf)	MOIST (%)
LOOSE brown dirty SAND					
	564.50				
MEDIUM gray SANDY LOAM			6 6 5	0.8 P	15
	563.00	-5			
STIFF dark gray SILTY LOAM			2 2 4	1.1 P	18
	560.50				
MEDIUM gray/tan SILTY CLAY LOAM			1 1 2	0.8 B	31
	558.00	-10			
VERY SOFT gray tan SILTY LOAM with SAND lens			1 1 1	0.2 P	29
	555.50				
VERY DENSE gray weathered LIMESTONE	554.00		100/3"		
Borehole continued with rock coring.		-15			
		-20			

The Unconfined Compressive Strength (UCS) Failure Mode is indicated by (B-Bulge, S-Shear, P-Penetrometer)
The SPT (N value) is the sum of the last two blow values in each sampling zone (AASHTO T206)

BBS, from 137 (Rev. 8-99)

Illinois Department of Transportation
Division of Highways
IDOT

ROCK CORE LOG

Page 1 of 1

Date 2/23/06

ROUTE FAI 280 DESCRIPTION P92-045-02 I-280 over US 67 Bridge, 3/4 m. S. of Rock River LOGGED BY W. Garza

SECTION 81-1VB & 81-1-HB-1 & 2 LOCATION Blackhawk Twp. - 23 SE, SEC. , TWP. 17N, RNG. 2W

COUNTY Rock Island CORING METHOD

STRUCT. NO.
Station

CORING BARREL TYPE & SIZE

BORING NO. B-1c
Station 254+77
Offset 69.00ft Rt CL
Ground Surface Elev. 567.0 ft

Core Diameter 1.5 in
Top of Rock Elev. 555.00 ft
Begin Core Elev. 554.00 ft

Description	Elev.	DEPTH (ft)	CORE (#)	RECOVERY (%)	R.Q.D. (%)	CORE TIME (min/ft)	STRENGTH (tsf)
Dolomite: buff gray-white, dense, highly fractured as in B-2 to 550.3, then transitions to . . . Shale: gray & fractured to 548.4 T.S.F.: 551.1 to 550.5			1	100	12	9	496
		-15					
	549.00						
Shale: as above to 548.4, transitioning to . . . Dolomite: as previously described, ranging from shard size fragments to less than 2 inch lengths.			2	100	0	4	
		-20					
	544.00						
Dolomite: as above.			3	100	0	7	
		-25					
	539.00						
End of Boring							
		-30					

Color pictures of the cores
Cores will be stored for examination until
The "Strength" column represents the uniaxial compressive strength of the core sample (ASTM D-2938)

BBS, form 138 (Rev. 8-99)

SOIL BORING LOG B-1c
STRUCTURE NO. 081-0022 (E.B.)
STRUCTURE NO. 081-0023 (W.B.)

DESIGNED	
CHECKED	
DRAWN	SV
CHECKED	SPK

INFRASTRUCTURE ENGINEERING INCORPORATED
33 West Monroe | Suite 1540 | Chicago, IL 60603
P 312.425.9560 | F 312.425.9564 | www.infrastructure-eng.com

SHEET NO. 51	F.A.I. RTE.	SECTION	COUNTY	TOTAL SHEETS	SHEET NO.
54 SHEETS	280	81-1(HB-2)R	ROCK ISLAND	503	333
			CONTRACT NO. 64815		
	FED. ROAD DIST. NO. _	ILLINOIS	FED. AID PROJECT		

STATE OF ILLINOIS
DEPARTMENT OF TRANSPORTATION

Illinois Department of Transportation
Division of Highways
IDOT

SOIL BORING LOG

Page 1 of 1

Date 2/27/06

ROUTE FAI 280 DESCRIPTION P92-045-02 I-280 over US 67, .75 m. S. of Rock River LOGGED BY W. Garza

SECTION 81-1VB & 81-1-HB-1 & 2 LOCATION Blackhawk Twp. - 23 SE, SEC. , TWP. 17N, RNG. 2W

COUNTY Rock Island DRILLING METHOD Hollow Stem Auger HAMMER TYPE B-53 Diedrich Automatic

STRUCT. NO.
Station

BORING NO. B-2c
Station 255+20
Offset 66.00ft Lt CL
Ground Surface Elev. 567.1 ft

Surface Water Elev. ft
Stream Bed Elev. ft

Groundwater Elev.:
First Encounter 554.6 ft ▽
Upon Completion ft
After Hrs. ft

	Elev.	DEPTH (ft)	BLOWS (/6")	UCS Qu (tsf)	MOIST (%)
MEDIUM redish brown SANDY LOAM				0.5 P	20
	564.60				
MEDIUM dark gray SILTY LOAM			2 2 3	0.8 P	25
	563.10	-5			
MEDIUM dark gray SILTY LOAM with SAND lens			2 2 2	0.6 P	24
	560.60				
MEDIUM dark gray SANDY LOAM			2 1 2	0.5 P	21
	558.10	-10			
MEDIUM gray SILTY LOAM			1 2 2	0.6 B	26
	555.10				
LOOSE gray LIMESTONE with SAND & GRAVEL			59 2 4		
	553.10	-15			
VERY DENSE gray LIMESTONE			33 100/3.5"		
	551.10				
Borehole continued with rock coring.		-20			

The Unconfined Compressive Strength (UCS) Failure Mode is indicated by (B-Bulge, S-Shear, P-Penetrometer)
The SPT (N value) is the sum of the last two blow values in each sampling zone (AASHTO T206)

BBS, from 137 (Rev. 8-99)

Illinois Department of Transportation
Division of Highways
IDOT

ROCK CORE LOG

Page 1 of 1

Date 2/27/06

ROUTE FAI 280 DESCRIPTION P92-045-02 I-280 over US 67, .75 m. S. of Rock River LOGGED BY W. Garza

SECTION 81-1VB & 81-1-HB-1 & 2 LOCATION Blackhawk Twp. - 23 SE, SEC. , TWP. 17N, RNG. 2W

COUNTY Rock Island CORING METHOD

STRUCT. NO.
Station

CORING BARREL TYPE & SIZE
Core Diameter 1.5 in
Top of Rock Elev. 552.60 ft
Begin Core Elev. 551.10 ft

BORING NO. B-2c
Station 255+20
Offset 66.00ft Lt CL
Ground Surface Elev. 567.1 ft

	Elev.	DEPTH (ft)	CORE (#)	RECOVERY (%)	R.Q.D. (%)	CORE TIME (min/ft)	STRENGTH (tsf)
Dolomite: buff gray-white, dense and highly fractured throughout, ranging from shard size fragments to less than 3 inch lengths.			1	75	0	6.6	
	546.10	-20					
As above			2	100	0	3.4	
	541.10	-25					
As above			3	100	0	4.6	
	536.10	-30					
End of Boring		-35					

Color pictures of the cores _____
Cores will be stored for examination until_____
The "Strength" column represents the uniaxial compressive strength of the core sample (ASTM D-2938)

BBS, form 138 (Rev. 8-99)

SOIL BORING LOG B-2c
STRUCTURE NO. 081-0022 (E.B.)
STRUCTURE NO. 081-0023 (W.B.)

DESIGNED	
CHECKED	
DRAWN	SV
CHECKED	SPK

INFRASTRUCTURE ENGINEERING | INCORPORATED
33 West Monroe | Suite 1540 | Chicago, IL 60603
P 312.425.9560 | F 312.425.9564 | www.infrastructure-eng.com

SHEET NO. 52	F.A.I. RTE.	SECTION	COUNTY	TOTAL SHEETS	SHEET NO.
54 SHEETS	280	81-1(HB-2)R	ROCK ISLAND	503	334
			CONTRACT NO. 64815		
	FED. ROAD DIST. NO. _	ILLINOIS	FED. AID PROJECT		

STATE OF ILLINOIS
DEPARTMENT OF TRANSPORTATION

Illinois Department of Transportation
Division of Highways
IDOT

SOIL BORING LOG

Page 1 of 1

Date 2/23/06

ROUTE FAI 280 DESCRIPTION P92-045-02 I-280 over US 67, .75 m. S. of Rock River LOGGED BY W. Garza

SECTION 81-1VB & 81-1-HB-1 & 2 LOCATION Blackhawk Twp. - 23 SE, SEC. , TWP. 17N, RNG. 2W

COUNTY Rock Island DRILLING METHOD Hollow Stem Auger HAMMER TYPE B-53 Diedrich Automatic

STRUCT. NO.
Station

BORING NO. B-3c
Station 256 + 00
Offset ft CL E. Abutment
Ground Surface Elev. 585.0 ft

Surface Water Elev. ft
Stream Bed Elev. ft

Groundwater Elev.:
First Encounter ft
Upon Completion ft
After Hrs. ft

Description	Elev.	DEPTH (ft)	BLOWS (/6")	UCS Qu (tsf)	MOIST (%)
MEDIUM brown LOAM				0.8 P	20
	582.50				
VERY STIFF brown SILTY CLAY LOAM			5 6 8	3.1 B	20
	581.00				
STIFF light brown SILTY LOAM		-5	4 4 6	1.0 P	19
	578.50				
VERY STIFF light brown SILTY LOAM			3 5 6	2.0 P	18
	576.00	-10			
STIFF light brown SILTY LOAM			2 6 7	1.0 P	18
	573.50				
STIFF light brown SILTY LOAM			5 8 8	1.0 S	19
	571.00	-15			
VERY STIFF light brown SILTY LOAM			5 9 11	2.1 P	17
	568.50				
VERY STIFF light brown SILTY LOAM			7 6 7	2.0 P	16
	566.00	-20			
STIFF brown SILTY CLAY LOAM			3 4 6	1.9 B	20
	563.50				
VERY STIFF dark gray LOAM			8 9 11	2.5 S	18
	561.00	-25			
STIFF dark brown SILTY LOAM			3 5 7	1.5 P	26
	558.50				
STIFF dark brown SILTY CLAY LOAM			2 3 4	1.5 P	25
	556.00	-30			
STIFF brown SILTY CLAY LOAM			1 2 3	1.2 B	23
	553.50				
VERY DENSE light gray weathered LIMESTONE	551.50		100/5"		
Borehole continued with rock coring.		-35			
		-40			

REVISED 9-20-07 EEC
Revised BORING Station to 256+00

The Unconfined Compressive Strength (UCS) Failure Mode is indicated by (B-Bulge, S-Shear, P-Penetrometer)
The SPT (N value) is the sum of the last two blow values in each sampling zone (AASHTO T206)

BBS, from 137 (Rev. 8-99)

Illinois Department of Transportation
Division of Highways
IDOT

ROCK CORE LOG

Page 1 of 1

Date 2/23/06

ROUTE FAI 280 DESCRIPTION P92-045-02 I-280 over US 67, .75 m. S. of Rock River LOGGED BY W. Garza

SECTION 81-1VB & 81-1-HB-1 & 2 LOCATION Blackhawk Twp. - 23 SE, SEC. , TWP. 17N, RNG. 2W

COUNTY Rock Island CORING METHOD

STRUCT. NO.
Station

BORING NO. B-3c
Station 256 + 00
Offset ft CL E. Abutment
Ground Surface Elev. 585.0 ft

CORING BARREL TYPE & SIZE
Core Diameter 1.5 in
Top of Rock Elev. 553.00 ft
Begin Core Elev. 551.50 ft

Description	Elev.	DEPTH (ft)	CORE (#)	RECOVERY (%)	R.Q.D. (%)	CORE TIME (min/ft)	STRENGTH (tsf)
Dolomite: buff-white, dense, first 24" severely fractured, some crystalline faces visible.		-35	1	90	0	5.6	
	546.50						
As above: some laminating visible.		-40	2	100	0	4.2	
	541.50						
As above: T.S.F.: 540.7 to 540.4 test segment cracked before reaching reasonable value.		-45	3	100	27	3.6	377
	537.50						
End of Boring		-50					

REVISED 9-20-07 EEC
Revised BORING Station to 256+00

Color pictures of the cores
Cores will be stored for examination until
The "Strength" column represents the uniaxial compressive strength of the core sample (ASTM D-2938)

BBS, form 138 (Rev. 8-99)

SOIL BORING LOG B-3c
STRUCTURE NO. 081-0022 (E.B.)
STRUCTURE NO. 081-0023 (W.B.)

DESIGNED	
CHECKED	
DRAWN	SV
CHECKED	SPK

INFRASTRUCTURE ENGINEERING | INCORPORATED
33 West Monroe | Suite 1540 | Chicago, IL 60603
P 312.425.9560 | F 312.425.9564 | www.infrastructure-eng.com

SHEET NO. 53	F.A.I. RTE.	SECTION	COUNTY	TOTAL SHEETS	SHEET NO.
54 SHEETS	280	81-1(HB-2)R	ROCK ISLAND	503	335
			CONTRACT NO. 64815		
	FED. ROAD DIST. NO. _	ILLINOIS	FED. AID PROJECT		

STATE OF ILLINOIS
DEPARTMENT OF TRANSPORTATION

Illinois Department of Transportation
Division of Highways
IDOT

SOIL BORING LOG

Page 1 of 1

Date 3/2/06

ROUTE FAI 280 DESCRIPTION P92-045-02 I-280 over US 67, 3/4 m. S. of Rock River LOGGED BY M. Jacoby

SECTION 81-1VB & 81-1-HB-1 & 2 LOCATION Blackhawk Twp. - 23 SE, SEC. , TWP. 17N, RNG. 2W

COUNTY Rock Island DRILLING METHOD Hollow Stem Auger HAMMER TYPE B-53 Diedrich Automatic

STRUCT. NO.
Station

BORING NO. B-4c
Station 253+60
Offset ft CL
Ground Surface Elev. 583.5 ft

Surface Water Elev. ft
Stream Bed Elev. ft

Groundwater Elev.:
First Encounter ft
Upon Completion ft
After Hrs. ft

DEPTH (ft)	BLOWS (/6")	UCS Qu (tsf)	MOIST (%)	DEPTH (ft)	BLOWS (/6")	UCS Qu (tsf)	MOIST (%)
-5				-25			
				1st Encounter of Rock at 27.0' 556.50			
				Auger Refusal at 29.0 554.50			
				End of Boring			
-10				-30			
-15				-35			
-20				-40			

The Unconfined Compressive Strength (UCS) Failure Mode is indicated by (B-Bulge, S-Shear, P-Penetrometer)
The SPT (N value) is the sum of the last two blow values in each sampling zone (AASHTO T206)

BBS, from 137 (Rev. 8-99)

DESIGNED	
CHECKED	
DRAWN	SV
CHECKED	SPK

INFRASTRUCTURE ENGINEERING | INCORPORATED
33 West Monroe | Suite 1540 | Chicago, IL 60603
P 312.425.9560 | F 312.425.9564 | www.infrastructure-eng.com

SOIL BORING LOG B-4c
STRUCTURE NO. 081-0022 (E.B.)
STRUCTURE NO. 081-0023 (W.B.)

SHEET NO. 54	F.A.I. RTE.	SECTION	COUNTY	TOTAL SHEETS	SHEET NO.
54 SHEETS	280	81-1(HB-2)R	ROCK ISLAND	503	336
			CONTRACT NO. 64815		
	FED. ROAD DIST. NO. _	ILLINOIS	FED. AID PROJECT		

Bench Mark: IDOT District Network Monument 65723070, 131.5 Feet South of I-280 Centerline at Sta. 283+31.91. Elev. 579.52.

Existing Structures: S.N. 081-0024 (W.B.) and S.N. 081-0025 (E.B.) built as F.A.I. Route 280, Section 81-1VB-1, at Station 264+83.02 in 1968. Deck wearing surface and expansion joints were replaced in 1989. Each superstructure consists of 4 span continuous, composite rolled steel beams with partial length flange cover plates. Each substructure consists of concrete abutments supported on piles and concrete hammerhead piers bearing on rock. The Westbound Structure is 269'-0" long back to back of abutments and the Eastbound Structure is 272'-11" long back to back of abuiments. The deck of both structures is 36'-0" out to out. Traffic is to be routed to one side of the interstate roadway during construction of the structure on the other side.

No Salvage.

Note: All existing elevations shown on these drawings are 0.20 feet lower than the corresponding elevations shown on the original drawings.

STATE OF ILLINOIS
DEPARTMENT OF TRANSPORTATION

* See Sheet 3 for Existing and Proposed Horizontal Clearances.

** Minimum vertical clearance is located within 8'-0" of the centerline of track. The point of low vertical clearance is beneath the bottom flange splice plate.

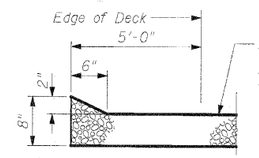

SECTION A-A

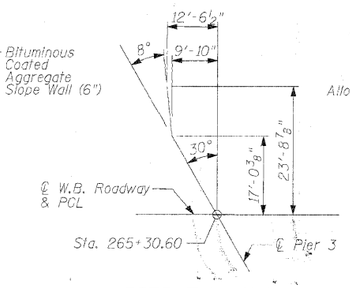

PIER 3 LAYOUT

DESIGN SPECIFICATIONS

AASHTO 2002 Standard Specifications for Highway Bridges

LOADING HS20-44 & ALT

Allow 25#/sq. ft. for future wearing surface.

DESIGN STRESSES

FIELD UNITS (New Construction)

f'_c = 3,500 psi (Concrete)
f_y = 60,000 psi (Reinforcement)
f_y = 50,000 psi (Structural Steel AASHTO M270 Grade 50)
f_y = 36,000 psi (Structural Steel AASHTO M270 Grade 36)

FIELD UNITS (Existing Construction)

f'_c = 1,000 psi (Concrete)
f_s = 20,000 psi (Reinforcement)
f_s = 20,000 psi (Structural Steel)

SEISMIC DATA

Seismic Performance Category (SPC) = A
Bedrock Acceleration Coefficient (A) = 0.034
Site Coefficient (S) = 1.0

APPROVED
FOR STRUCTURAL ADEQUACY ONLY
Ralph E. Anderson (TRD)
ENGINEER OF BRIDGES AND STRUCTURES

STATE OF ILLINOIS
STEVEN P. KARLOWSKI
81-4663
CHICAGO, IL
LICENSED STRUCTURAL ENGINEER

Steven P. Karlowski
EXP. 11/30/2010
DATE: 7/23/2010

STATION 264+81.03
RE-BUILT BY
STATE OF ILLINOIS
F.A.I. RT. 280 SEC. 81-1(VB-1)R
LOADING HS20 & ALT.
STR. NO. 081-0024

WESTBOUND LANES NAME PLATE

See Std. 515001

Existing Name Plate shall be cleaned and relocated next to new Name Plate. Cost included with Name Plates.

STATION 264+81.03
RE-BUILT BY
STATE OF ILLINOIS
F.A.I. RT. 280 SEC. 81-1(VB-1)R
LOADING HS20 & ALT.
STR. NO. 081-0025

EASTBOUND LANES NAME PLATE

See Std. 515001

Existing Name Plate shall be cleaned and relocated next to new Name Plate. Cost included with Name Plates.

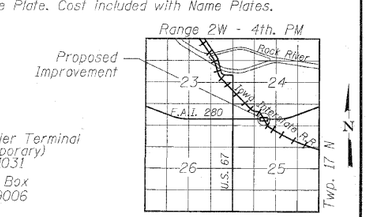

LOCATION SKETCH

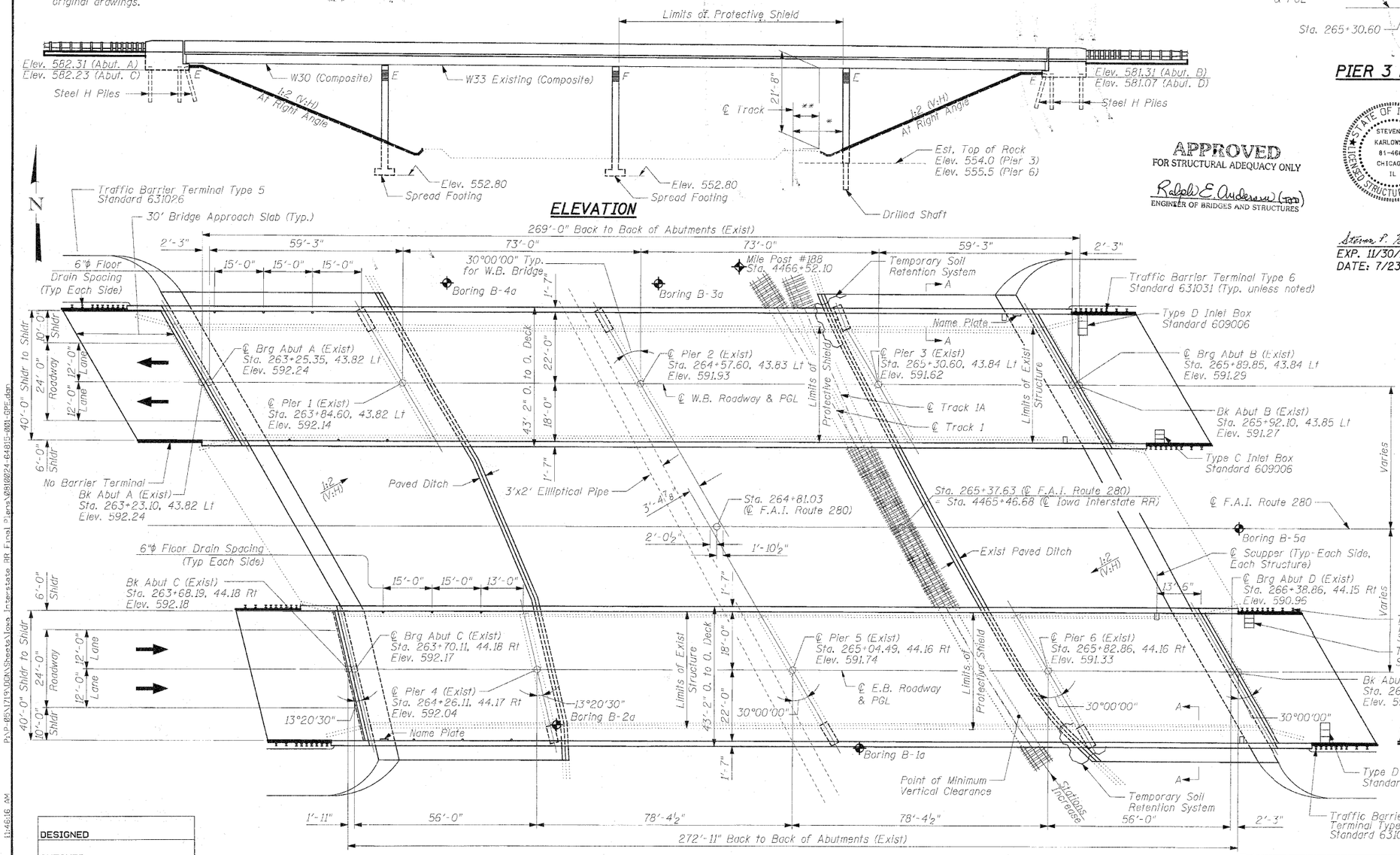

PLAN

GENERAL PLAN & ELEVATION
I-280 OVER IOWA INTERSTATE RAILROAD
F.A.I. RTE. 280 - SEC. 81-1(VB-1)R
ROCK ISLAND COUNTY
STATION 264+81.03
STRUCTURE NO. 081-0024 (W.B.)
STRUCTURE NO. 081-0025 (E.B.)

LEGEND

◆ - Soil Boring Location

Note: No deck drains will be permitted in the span over tracks or within 10' of cross arms of a rail road pole line.

DESIGNED	
CHECKED	
DRAWN	ASJ
CHECKED	SPK

INFRASTRUCTURE ENGINEERING INCORPORATED
33 West Monroe | Suite 1540 | Chicago, IL 60603
P 312.425.9560 | F 312.425.9564 | www.infrastructure-eng.com

SHEET NO. 1	F.A.I. RTE.	SECTION	COUNTY	TOTAL SHEETS	SHEET NO.
77 SHEETS	280	81-1(VB-1)R	ROCK ISLAND	503	337
			CONTRACT NO. 64815		
	FED. ROAD DIST. NO. _	ILLINOIS	FED. AID PROJECT		

P:\P-05\1719\DGN\Sheets\Iowa Interstate RR Final Plans\0810024-64815-001-GPE.dgn 7/22/2010 11:46:16 AM .1719.

STATE OF ILLINOIS
DEPARTMENT OF TRANSPORTATION

GENERAL NOTES

Fasteners shall be AASHTO M164 Type 1, mechanically galvanized bolts. Bolts $\frac{7}{8}$ in. ϕ, holes $\frac{15}{16}$ in. ϕ, unless otherwise noted.

Calculated weight of Structural Steel = 7,620 pounds (AASHTO M270 Grade 36)
84,520 pounds (AASHTO M270 Grade 50)

No field welding is permitted except as specified in the contract documents.

The Contractor shall test the existing welds by non-destructive methods within 2 ft. of the end of the existing cover plates for cracks after removal of the existing concrete deck. Dye penetrant (PT), magnetic particle (MT), or other approved testing method shall be performed by qualified personnel approved by the Engineer. If cracks are found, report them to the Bureau of Bridges and Structures for disposition. The cost of testing is included in Removal of Existing Concrete Deck. The cost of crack repair, if necessary, will be paid for according to Article 109.04 of the Standard Specifications.

Reinforcement bars shall conform to the requirements of ASTM A 706 Gr 60. See Special Provisions.

Reinforcement bars designated (E) shall be epoxy coated.

Prior to pouring the new concrete deck, all heavy or loose rust, loose mill scale, and other loose or potentially detrimental foreign material shall be removed from the surfaces in contact with concrete. Tightly adhered paint may remain unless otherwise noted. Removal shall be accomplished by methods that will not damage the steel and the cost will be included in the pay item covering removal of the existing concrete.
As directed by the Engineer, existing construction accessories welded to the top flange of beams shall be removed. The weld areas shall be ground flush and inspected for cracks using magnetic particle testing (MT) or dye penetrant testing (PT) by qualified personnel approved by the Engineer.
Any cracks that cannot be removed by grinding $\frac{1}{4}$ inch deep shall be identified and reported to the Bureau of Bridges and Structures for further disposition. The cost of removing welded accessories, grinding and inspecting weld areas and grinding cracks will be paid for according to Article 109.04 of the Standard Specifications.

If the Contractor elects to use cantilever forming brackets on the exterior beams, the brackets shall be placed at the same locations as required for the hardwood blocks in Article 503.06(b) of the Standard Specifications. If additional cantilever forming brackets are required, hardwood blocking shall be wedged between the exterior and first interior beam at each of these additional bracket locations.

Plan dimensions and details relative to existing plans are subject to nominal construction variations. The Contractor shall field verify existing dimensions and details affecting new construction and make necessary approved adjustments prior to construction or ordering of materials. Such variations shall not be cause for additional compensation for a change in scope of the work, however, the Contractor will be paid for the quantity actually furnished at the unit price bid for the work.

Bearing seat surfaces shall be constructed or adjusted to the designated elevations within a tolerance of $\frac{1}{8}$ inch (0.01 ft.). Adjustment shall be made either by grinding the surface or by shimming the bearings.

Concrete Sealer shall be applied to all exposed surfaces of new concrete on the backwall, bridge seat and front face of the bridge seat of the abutments.

The existing structural steel coating contains lead. The Contractor shall take appropriate precautions to deal with the presence of lead on this project.

Cleaning and painting of the existing structural steel shall be as specified in the Special Provision for "Cleaning and Painting Existing Steel Structures". All existing steel shall be cleaned per Near White Blast Cleaning - SSPC-SP10. All existing steel shall be painted according to the requirements of Paint System 1-OZ/E/U. The color of the final finish coat for all interior steel surfaces shall be Gray, Munsell No. 5B 7/1. The color of the final finish coat for the exterior and bottom flange of the fascia beams shall be Blue, Munsell No. 10B 3/6.

A minimum of (2) air monitors will be required to monitor abrasive blasting operations at this site. See Special Provision for "Containment and Disposal of Lead Paint Cleaning Residues".

The Organic Zinc Rich Primer/Epoxy/Urethane paint system shall be used for shop and field painting of new structural steel except where otherwise noted. Two coats shall be applied in the shop and the finish coat applied in the field. Masked off connection surfaces, and field installed fasteners, shall be touched up and finish coated in the field. The color of the final finish coat for all interior steel surfaces shall be gray, Munsell No. 5B 7/1. The color of the final finish coat for the exterior and bottom flange of the fascia beams shall be Blue Munsell No. 10B 3/6. See Special Provision for "Cleaning and Painting New Metal Structures".

The embankment configuration shown shall be the minimum that must be placed and compacted prior to construction of the abutments.

A cantilevered sheet piling design does not appear feasible and additional members or other retention systems may be necessary. The Contractor shall submit a temporary soil retention system design including plan details and calculations for review and acceptance by the Engineer.

INDEX OF SHEETS

TOTAL BILL OF MATERIAL

	ITEM	UNIT	SUPER	SUB	TOTAL
	Porous Granular Embankment, Special	Cu. Yd.		389	389
	Concrete Removal	Cu. Yd.		41.5	41.5
	Slope Wall Removal	Sq. Yd.		2,080	2,080
	Protective Shield	Sq. Yd.	606		606
	Structure Excavation	Cu. Yd.		897	897
	Floor Drains	Each	12		12
	Concrete Structures	Cu. Yd.		411.8	411.8
	Concrete Superstructure	Cu. Yd.	1,079.8		1,079.8
	Bridge Deck Grooving	Sq. Yd.	2,776		2,776
	Concrete Encasement	Cu. Yd.		2.4	2.4
*	Protective Coat	Sq. Yd.	3,538		3,538
	Stud Shear Connectors	Each	13,341		13,341
	Cleaning and Painting Steel Bridge No. 2	L. Sum	1		1
	Containment and Disposal of Lead Paint Cleaning Residues No. 2	L. Sum	1		1
	Reinforcement Bars	Pound		810	810
	Reinforcement Bars, Epoxy Coated	Pound	235,280	47,840	283,120
	Bar Splicers	Each		183	183
	Slope Wall 4 Inch	Sq. Yd.		182	182
	Bituminous Coated Aggregate Slopewall 6"	Sq. Yd.		2,120	2,120
	Furnishing Steel Piles HP8x36	Foot		396	396
	Driving Piles	Foot		396	396
	Pile Shoes	Each		12	12
	Name Plates	Each	2		2
	Drilled Shaft in Soil	Cu. Yd.		7.9	7.9
	Drilled Shaft in Rock	Cu. Yd.		3.5	3.5
	Preformed Joint Strip Seal	Foot	188		188
	Elastomeric Bearing Assembly, Type II	Each	4		4
	Anchor Bolts, $\frac{5}{8}$"	Each	8		8
	Anchor Bolts, 1"	Each	8		8
	Anchor Bolts, $1\frac{1}{2}$"	Each	4		4
	Concrete Sealer	Sq. Ft.		391	391
	Epoxy Crack Injection	Foot		112	112
	Geocomposite Wall Drain	Sq. Yd.		184	184
	Pipe Underdrains for Structures 4"	Foot		179	179
	Drainage Scuppers, DS-11	Each	4		4
	Temporary Soil Retention System	Sq. Ft.		206	206
	Structural Repair of Concrete (Depth Equal to or Less than 5 Inches)	Sq. Ft.		110	110
	Removal of Existing Concrete Deck, No. 2	Each	2		2
	Furnishing and Erecting Structural Steel Bridge No. 4	L. Sum	1		1

* Quantity is for deck surface and inside face and top of parapets.

DESIGNED	
CHECKED	
DRAWN	ASJ
CHECKED	SPK

GENERAL NOTES AND TOTAL BILL OF MATERIAL
STRUCTURE NO. 081-0024 (W.B.)
STRUCTURE NO. 081-0025 (E.B.)

SHEET NO. 2	F.A.I. RTE.	SECTION	COUNTY	TOTAL SHEETS	SHEET NO.
77 SHEETS	280	81-1(VB-1)R	ROCK ISLAND	503	338
			CONTRACT NO. 64815		
	FED. ROAD DIST. NO. _	ILLINOIS	FED. AID PROJECT		

STATE OF ILLINOIS
DEPARTMENT OF TRANSPORTATION

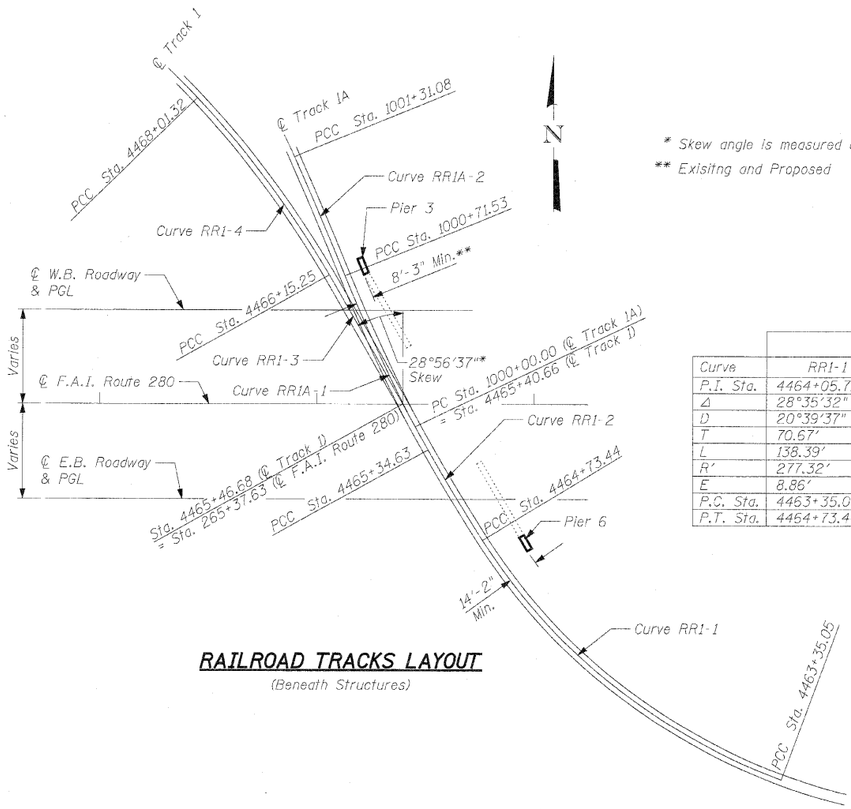

RAILROAD TRACKS LAYOUT

(Beneath Structures)

* Skew angle is measured at a line tangent to ℄ Track 1 curve at Sta. 4465+40.66.

** Exisitng and Proposed

TRACK CURVE DATA

	℄ Track 1				℄ Track 1A	
Curve	RR1-1	RR1-2	RR1-3	RR1-4	RR1A-1	RR1A-2
P.I. Sta.	4464+05.71	4465+04.05	4465+74.94	4467+09.73	1000+35.79	1001+01.31
Δ	28°35'32" (Rt)	3°45'23" (Rt)	1°8'43" (Lt)	24°29'14" (Lt)	4°32'25" (Rt)	2°15'38" (Lt)
D	20°39'37"	6°08'17"	1°25'15"	13°09'36"	6°20'51"	3°47'47"
T	70.67'	30.61'	40.31'	94.48'	35.79'	29.77'
L	138.39'	61.20'	80.62'	186.07'	71.53'	59.54'
R'	277.32'	933.43'	4,032.61'	435.38'	902.67'	1,509.19
E	8.86'	0.50'	0.20'	10.13'	0.71'	0.29'
P.C. Sta.	4463+35.05	4464+73.44	4465+34.63	4466+15.25	1000+00.00	1000+71.53
P.T. Sta.	4464+73.44	4465+34.63	4466+15.25	4468+01.32	1000+71.53	1001+31.08

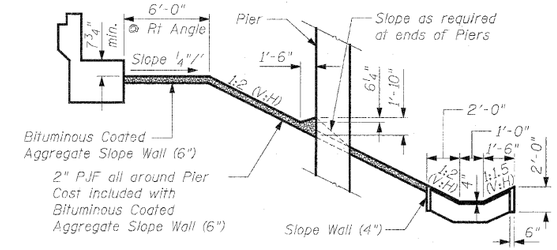

SECTION THRU SLOPE WALL

All Rubbish and Loose Earth in the Slopes Shall be Removed and any Eroded Portion of the Slopes Shall be Filled and Compacted with Suitable Materials to the Lines and Grades as Shown on the Plans and/or Directed by the Engineer. Cost Included with Bituminous Coated Aggregate Slope Wall (6").

Slope Wall (4") shall be reinforced with welded wire fabric. 6" x 6" - W4.0 x W4.0, weighing 58 lbs. per 100 sq. ft.

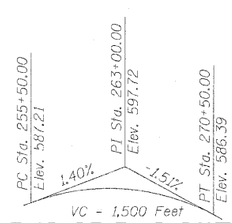

PROFILE GRADE F.A.I. ROUTE 280

(Along ℄ Roadway)

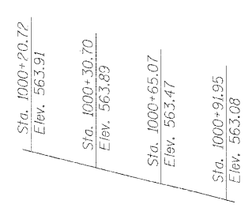

PROFILE GRADE TRACK 1A

(Along Top of East Rail of Track)

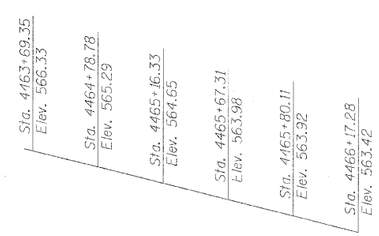

PROFILE GRADE TRACK 1

(Along Top of West Rail of Track)

RAILROAD TRACK LAYOUT & SLOPE WALL
STRUCTURE NO. 081-0024 (W.B.)
STRUCTURE NO. 081-0025 (E.B.)

DESIGNED	-
CHECKED	-
DRAWN	ASJ
CHECKED	SPK

INFRASTRUCTURE ENGINEERING | INCORPORATED
33 West Monroe | Suite 1540 | Chicago, IL 60603
P 312.425.9560 | F 312.425.9564 | www.infrastructure-eng.com

SHEET NO. 3	F.A.I. RTE.	SECTION	COUNTY	TOTAL SHEETS	SHEET NO.
77 SHEETS	280	81-1(VB-1)R	ROCK ISLAND	503	339
	SN 081-0024 (WB), 0025 (EB)		CONTRACT NO. 64815		
	FED. ROAD DIST. NO. _	ILLINOIS	FED. AID PROJECT		

STATE OF ILLINOIS
DEPARTMENT OF TRANSPORTATION

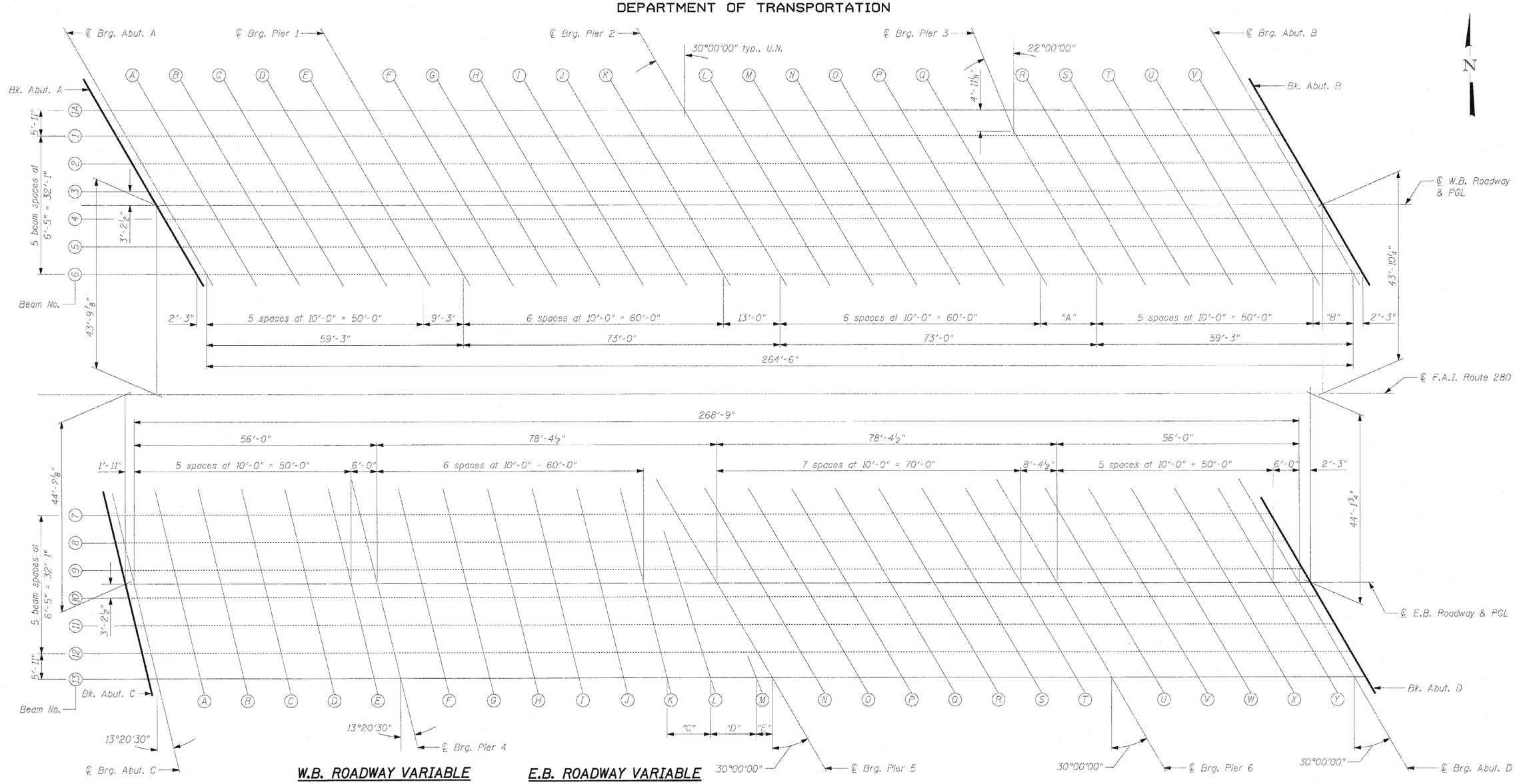

PLAN

W.B. ROADWAY VARIABLE DIMENSION TABLE

Beam	A	B
1A	13'-10¼"	8'-4¾"
1	13'-0"	9'-3"
2	13'-0"	9'-3"
3	13'-0"	9'-3"
4	13'-0"	9'-3"
5	13'-0"	9'-3"
6	13'-0"	9'-3"

E.B. ROADWAY VARIABLE DIMENSION TABLE

Beam	C	D	E
7	12'-11"	0'-0"	0'-0"
8	10'-0"	5'-1¼"	0'-0"
9	10'-0"	7'-3⅜"	0'-0"
*	10'-0"	8'-4½"	0'-0"
10	10'-0"	9'-5⅝"	0'-0"
11	10'-0"	11'-7¾"	0'-0"
12	10'-0"	13'-10"	0'-0"
13	10'-0"	10'-0"	5'-10⅛"

* ℄ E.B. Roadway & P.G.L.

TOP OF SLAB ELEVATIONS
STRUCTURE NO. 081-0024 (W.B.)
STRUCTURE NO. 081-0025 (E.B.)

DESIGNED	ASJ
CHECKED	MMB
DRAWN	ASJ
CHECKED	MMB

INFRASTRUCTURE ENGINEERING | INCORPORATED
33 West Monroe | Suite 1540 | Chicago, IL 60603
P 312.425.9560 | F 312.425.9564 | www.infrastructure-eng.com

SHEET NO. 4	F.A.I. RTE.	SECTION	COUNTY	TOTAL SHEETS	SHEET NO.
77 SHEETS	280	81-1(VB-1)R	ROCK ISLAND	503	340
			CONTRACT NO. 64815		
	FED. ROAD DIST. NO. _	ILLINOIS	FED. AID PROJECT		

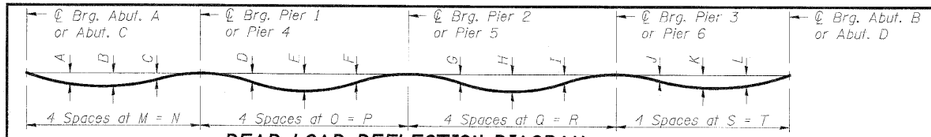

DEAD LOAD DEFLECTION DIAGRAM

(Includes weight of concrete only.)

Note:
The above deflections are not to be used in the field if the engineer is working from the grade elevations adjusted for dead load deflections as shown below and on Sheets 6-10.

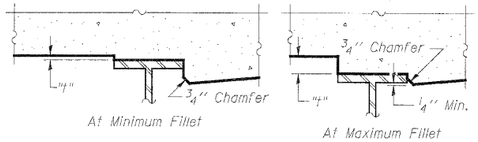

To determine "t": After all structural steel has been erected, elevations of the top flanges of the beams shall be taken at intervals shown on Sheet 4. These elevations subtracted from the "Theoretical Grade Elevations Adjusted for Dead Load Deflection" shown below and on Sheets 6-10, minus slab thickness, equals the fillet heights "t" above top flange of beams.

STATE OF ILLINOIS
DEPARTMENT OF TRANSPORTATION

DIMENSION TABLE FOR DEAD LOAD DEFLECTION DIAGRAM

Beam	A	B	C	D	F	F	G	H	I	J	K	L	M	N	O	P	Q	R	S	T
1A	1/4"	5/16"	1/8"	3/16"	3/8"	3/16"	1/4"	7/16"	1/4"	1/8"	5/16"	1/4"	14'-9 3/4"	59'-3"	18'-3"	73'-0"	18'-5 1/2"	73'-10 1/4"	14'-7 1/4"	58'-4 3/4"
1-6	3/8"	7/16"	3/16"	1/4"	1/2"	1/4"	1/4"	1/2"	1/4"	3/16"	7/16"	3/8"	14'-9 3/4"	59'-3"	18'-3"	73'-0"	18'-3"	73'-0"	14'-9 3/4"	59'-3"
7	1/4"	5/16"	1/8"	1/4"	7/16"	3/16"	7/16"	3/4"	1/2"	1/6"	1/4"	1/4"	14'-0"	56'-0"	18'-2 3/4"	72'-11"	19'-7 1/8"	78'-4 1/2"	14'-0"	56'-0"
8	1/4"	5/16"	1/8"	5/16"	1/2"	1/4"	3/8"	3/4"	7/16"	1/6"	1/4"	1/4"	14'-0"	56'-0"	18'-9 1/4"	75'-1 3/16"	19'-7 1/8"	78'-4 1/2"	14'-0"	56'-0"
9	1/4"	1/4"	1/8"	3/8"	5/8"	5/16"	3/8"	11/16"	7/16"	1/6"	1/4"	1/4"	14'-0"	56'-0"	19'-3 7/8"	77'-3 5/8"	19'-7 1/8"	78'-4 1/2"	14'-0"	56'-0"
10	1/4"	1/4"	1/16"	1/2"	3/4"	3/8"	5/16"	11/16"	7/16"	1/6"	1/4"	1/4"	14'-0"	56'-0"	19'-10 3/8"	79'-5 5/8"	19'-7 1/8"	78'-4 1/2"	14'-0"	56'-0"
11	3/16"	3/16"	1/16"	1/2"	13/16"	7/16"	5/16"	9/16"	3/8"	1/6"	1/4"	3/16"	14'-0"	56'-0"	20'-5"	81'-7 13/16"	19'-7 1/8"	78'-4 1/2"	14'-0"	56'-0"
12	3/16"	3/16"	0	9/16"	7/8"	1/2"	1/4"	9/16"	3/8"	1/8"	1/4"	3/16"	14' 0"	56'-0"	20'-11 1/2"	83'-10"	19'-7 1/8"	78'-4 1/2"	14'-0"	56'-0"
13	1/8"	1/8"	0	5/8"	15/16"	9/16"	1/4"	1/2"	5/16"	1/6"	3/16"	3/16"	14'-0"	56'-0"	21'-5 1/2"	85'-10 1/8"	19'-7 1/8"	78'-4 1/2"	14'-0"	56'-0"

FILLET HEIGHTS

BEAM 1A

Location	Station	Offset	Theoretical Grade Elevations	Theoretical Grade Elevations Adjusted For Dead Load Deflection
Bk. Abut. A	263+10.42	-21.96	591.86	591.86
℄ Brg. Abut. A	263+12.67	-21.96	591.86	591.86
A	263+22.67	-21.96	591.85	591.86
B	263+32.67	-21.96	591.84	591.86
C	263+42.67	-21.96	591.82	591.85
D	263+52.67	-21.96	591.81	591.83
E	263+62.67	-21.96	591.79	591.80
℄ Pier 1	263+71.92	-21.96	591.78	591.78
F	263+81.92	-21.96	591.76	591.76
G	263+91.92	-21.96	591.73	591.75
H	264+01.92	-21.96	591.71	591.74
I	264+11.92	-21.96	591.68	591.71
J	264+21.92	-21.96	591.65	591.68
K	264+31.92	-21.96	591.62	591.63
℄ Pier 2	264+44.92	-21.96	591.58	591.58
L	264+54.92	-21.96	591.55	591.56
M	264+64.92	-21.96	591.51	591.53
N	264+74.92	-21.96	591.47	591.51
O	264+84.92	-21.96	591.43	591.47
P	264+94.92	-21.96	591.39	591.42
Q	265+04.92	-21.96	591.35	591.36
℄ Pier 3	265+18.78	-21.96	591.28	591.28
R	265+28.78	-21.96	591.23	591.24
S	265+38.78	-21.96	591.18	591.20
T	265+48.78	-21.96	591.13	591.15
U	265+58.78	-21.96	591.07	591.10
V	265+68.78	-21.96	591.02	591.03
℄ Brg. Abut. B	265+77.17	-21.96	590.97	590.97
Bk. Abut. B	265+79.42	-21.96	590.95	590.95

BEAM 1

Location	Station	Offset	Theoretical Grade Elevations	Theoretical Grade Elevations Adjusted For Dead Load Deflection
Bk. Abut. A	263+13.84	-16.04	591.98	591.98
℄ Brg. Abut. A	263+16.09	-16.04	591.98	591.98
A	263+26.09	-16.04	591.97	591.99
B	263+36.09	-16.04	591.96	591.99
C	263+46.09	-16.04	591.94	591.98
D	263+56.09	-16.04	591.93	591.95
E	263+66.09	-16.04	591.91	591.92
℄ Pier 1	263+75.34	-16.04	591.89	591.89
F	263+85.34	-16.04	591.87	591.88
G	263+95.34	-16.04	591.85	591.87
H	264+05.34	-16.04	591.82	591.86
I	264+15.34	-16.04	591.80	591.84
J	264+25.34	-16.04	591.77	591.80
K	264+35.34	-16.04	591.74	591.75
℄ Pier 2	264+48.34	-16.04	591.69	591.69
L	264+58.34	-16.04	591.66	591.67
M	264+68.34	-16.04	591.62	591.65
N	264+78.34	-16.04	591.58	591.62
O	264+88.34	-16.04	591.54	591.58
P	264+98.34	-16.04	591.50	591.53
Q	265+08.34	-16.04	591.45	591.47
℄ Pier 3	265+21.34	16.04	591.39	591.39
R	265+31.34	-16.04	591.34	591.35
S	265+41.34	-16.04	591.29	591.32
T	265+51.34	-16.04	591.24	591.27
U	265+61.34	-16.04	591.18	591.22
V	265+71.34	-16.04	591.13	591.15
℄ Brg. Abut. B	265+80.59	-16.04	591.07	591.07
Bk. Abut. B	265+82.84	-16.04	591.06	591.06

BEAM 2

Location	Station	Offset	Theoretical Grade Elevations	Theoretical Grade Elevations Adjusted For Dead Load Deflection
Bk. Abut. A	263+17.54	-9.63	592.10	592.10
℄ Brg. Abut. A	263+19.79	-9.63	592.09	592.09
A	263+29.79	-9.63	592.08	592.11
B	263+39.79	-9.63	592.07	592.11
C	263+49.79	-9.63	592.06	592.09
D	263+59.79	-9.63	592.04	592.07
E	263+69.79	-9.63	592.02	592.03
℄ Pier 1	263+79.04	-9.63	592.01	592.01
F	263+89.04	-9.63	591.98	591.99
G	263+99.04	-9.63	591.96	591.99
H	264+09.04	-9.63	591.93	591.97
I	264+19.04	-9.63	591.91	591.95
J	264+29.04	-9.63	591.88	591.91
K	264+39.04	-9.63	591.85	591.86
℄ Pier 2	264+52.04	-9.63	591.80	591.80
L	264+62.04	-9.63	591.77	591.77
M	264+72.04	-9.63	591.73	591.75
N	264+82.04	-9.63	591.69	591.73
O	264+92.04	-9.63	591.65	591.69
P	265+02.04	9.63	591.60	591.63
Q	265+12.04	-9.63	591.56	591.57
℄ Pier 3	265+25.04	-9.63	591.49	591.49
R	265+35.04	-9.63	591.44	591.45
S	265+45.04	-9.63	591.39	591.42
T	265+55.04	-9.63	591.34	591.37
U	265+65.04	-9.63	591.28	591.32
V	265+75.04	-9.63	591.22	591.25
℄ Brg. Abut. B	265+84.29	-9.63	591.17	591.17
Bk. Abut. B	265+86.54	-9.63	591.16	591.16

W.B. ROADWAY - TOP OF SLAB ELEVATIONS
STRUCTURE NO. 081-0024 (W.B.)
STRUCTURE NO. 081-0025 (E.B.)

DESIGNED	LAN
CHECKED	LC
DRAWN	LAN
CHECKED	LC

Note:
Offset is measured from ℄ W.B. Roadway & P.G.L. Negative number indicates distance left of ℄. Positive number indicates distance right of ℄.

INFRASTRUCTURE ENGINEERING | INCORPORATED
33 West Monroe | Suite 1540 | Chicago, IL 60603
P 312.425.9560 | F 312.425.9564 | www.infrastructure-eng.com

SHEET NO. 5	F.A.I. RTE.	SECTION	COUNTY	TOTAL SHEETS	SHEET NO.
77 SHEETS	280	81-1(VB-1)R	ROCK ISLAND	503	341
			CONTRACT NO. 64815		
	FED. ROAD DIST. NO. _	ILLINOIS	FED. AID PROJECT		

STATE OF ILLINOIS
DEPARTMENT OF TRANSPORTATION

BEAM 3

Location	Station	Offset	Theoretical Grade Elevations	Theoretical Grade Elevations Adjusted For Dead Load Deflection
Bk. Abut. A	263+21.25	-3.21	592.19	592.19
℄ Brg. Abut. A	263+23.50	-3.21	592.19	592.19
A	263+33.50	-3.21	592.18	592.20
B	263+43.50	-3.21	592.17	592.20
C	263+53.50	-3.21	592.15	592.19
D	263+63.50	-3.21	592.14	592.16
E	263+73.50	-3.21	592.12	592.12
℄ Pier 1	263+82.75	-3.21	592.10	592.10
F	263+92.75	-3.21	592.08	592.09
G	264+02.75	-3.21	592.05	592.08
H	264+12.75	-3.21	592.02	592.06
I	264+22.75	-3.21	592.00	592.04
J	264+32.75	-3.21	591.97	592.00
K	264+42.75	-3.21	591.93	591.95
℄ Pier 2	264+55.75	-3.21	591.89	591.89
L	264+65.75	-3.21	591.85	591.86
M	264+75.75	-3.21	591.81	591.84
N	264+85.75	-3.21	591.77	591.81
O	264+95.75	-3.21	591.73	591.77
P	265+05.75	-3.21	591.69	591.72
Q	265+15.75	-3.21	591.64	591.65
℄ Pier 3	265+28.75	-3.21	591.58	591.58
R	265+38.75	-3.21	591.53	591.53
S	265+48.75	-3.21	591.47	591.50
T	265+58.75	-3.21	591.42	591.45
U	265+68.75	-3.21	591.36	591.40
V	265+78.75	-3.21	591.30	591.32
℄ Brg. Abut. B	265+88.00	-3.21	591.25	591.25
Bk. Abut. B	265+90.25	-3.21	591.23	591.23

℄ W.B. ROADWAY & P.G.L.

Location	Station	Offset	Theoretical Grade Elevations	Theoretical Grade Elevations Adjusted For Dead Load Deflection
Bk. Abut. A	263+23.10	0.00	592.24	592.24
℄ Brg. Abut. A	263+25.35	0.00	592.24	592.24
A	263+35.35	0.00	592.23	592.25
B	263+45.35	0.00	592.22	592.25
C	263+55.35	0.00	592.20	592.24
D	263+65.35	0.00	592.18	592.21
E	263+75.35	0.00	592.16	592.17
℄ Pier 1	263+84.60	0.00	592.14	592.14
F	263+94.60	0.00	592.12	592.13
G	264+04.60	0.00	592.10	592.12
H	264+14.60	0.00	592.07	592.11
I	264+24.60	0.00	592.04	592.08
J	264+34.60	0.00	592.01	592.04
K	264+44.60	0.00	591.98	591.99
℄ Pier 2	264+57.60	0.00	591.93	591.93
L	264+67.60	0.00	591.90	591.90
M	264+77.60	0.00	591.86	591.88
N	264+87.60	0.00	591.82	591.85
O	264+97.60	0.00	591.77	591.81
P	265+07.60	0.00	591.73	591.76
Q	265+17.60	0.00	591.68	591.70
℄ Pier 3	265+30.60	0.00	591.62	591.62
R	265+40.60	0.00	591.57	591.57
S	265+50.60	0.00	591.51	591.54
T	265+60.60	0.00	591.46	591.49
U	265+70.60	0.00	591.40	591.44
V	265+80.60	0.00	591.34	591.36
℄ Brg. Abut. B	265+89.85	0.00	591.29	591.29
Bk. Abut. B	265+92.10	0.00	591.27	591.27

BEAM 4

Location	Station	Offset	Theoretical Grade Elevations	Theoretical Grade Elevations Adjusted For Dead Load Deflection
Bk. Abut. A	263+24.95	3.21	592.19	592.19
℄ Brg. Abut. A	263+27.20	3.21	592.19	592.19
A	263+37.20	3.21	592.18	592.20
B	263+47.20	3.21	592.16	592.20
C	263+57.20	3.21	592.15	592.18
D	263+67.20	3.21	592.13	592.15
E	263+77.20	3.21	592.11	592.12
℄ Pier 1	263+86.45	3.21	592.09	592.09
F	263+96.45	3.21	592.07	592.08
G	264+06.45	3.21	592.04	592.07
H	264+16.45	3.21	592.01	592.05
I	264+26.45	3.21	591.99	592.03
J	264+36.45	3.21	591.95	591.98
K	264+46.45	3.21	591.92	591.94
℄ Pier 2	264+59.45	3.21	591.88	591.88
L	264+69.45	3.21	591.84	591.85
M	264+79.45	3.21	591.80	591.82
N	264+89.45	3.21	591.76	591.80
O	264+99.45	3.21	591.71	591.76
P	265+09.45	3.21	591.67	591.70
Q	265+19.45	3.21	591.62	591.64
℄ Pier 3	265+32.45	3.21	591.56	591.56
R	265+42.45	3.21	591.51	591.52
S	265+52.45	3.21	591.45	591.48
T	265+62.45	3.21	591.40	591.43
U	265+72.45	3.21	591.34	591.38
V	265+82.45	3.21	591.28	591.30
℄ Brg. Abut. B	265+91.70	3.21	591.22	591.22
Bk. Abut. B	265+93.95	3.21	591.21	591.21

DESIGNED	LAN
CHECKED	LC
DRAWN	LAN
CHECKED	LC

Note:
Offset is measured from ℄ W.B. Roadway & P.G.L.
Negative number indicates distance left of ℄. Positive number indicates distance right of ℄.

INFRASTRUCTURE ENGINEERING | INCORPORATED
33 West Monroe | Suite 1540 | Chicago, IL 60603
P 312.425.9560 | F 312.425.9564 | www.infrastructure-eng.com

W.B. ROADWAY - TOP OF SLAB ELEVATIONS
STRUCTURE NO. 081-0024 (W.B.)
STRUCTURE NO. 081-0025 (E.B.)

SHEET NO. 6	F.A.I. RTE.	SECTION	COUNTY	TOTAL SHEETS	SHEET NO.
77 SHEETS	280	81-1(VB-1)R	ROCK ISLAND	503	342
	CONTRACT NO. 64815				
	FED. ROAD DIST. NO. _	ILLINOIS	FED. AID PROJECT		

STATE OF ILLINOIS
DEPARTMENT OF TRANSPORTATION

BEAM 5

Location	Station	Offset	Theoretical Grade Elevations	Theoretical Grade Elevations Adjusted For Dead Load Deflection
Bk. Abut. A	263+28.66	9.63	592.09	592.09
℄ Brg. Abut. A	263+30.91	9.63	592.08	592.08
A	263+40.91	9.63	592.07	592.09
B	263+50.91	9.63	592.06	592.09
C	263+60.91	9.63	592.04	592.08
D	263+70.91	9.63	592.02	592.05
E	263+80.91	9.63	592.00	592.01
℄ Pier 1	263+90.16	9.63	591.98	591.98
F	264+00.16	9.63	591.96	591.97
G	264+10.16	9.63	591.93	591.96
H	264+20.16	9.63	591.90	591.94
I	264+30.16	9.63	591.87	591.91
J	264+40.16	9.63	591.84	591.87
K	264+50.16	9.63	591.81	591.82
℄ Pier 2	264+63.16	9.63	591.76	591.76
L	264+73.16	9.63	591.72	591.73
M	264+83.16	9.63	591.68	591.71
N	264+93.16	9.63	591.64	591.68
O	265+03.16	9.63	591.60	591.64
P	265+13.16	9.63	591.55	591.58
Q	265+23.16	9.63	591.50	591.52
℄ Pier 3	265+36.16	9.63	591.44	591.44
R	265+46.16	9.63	591.39	591.40
S	265+56.16	9.63	591.33	591.36
T	265+66.16	9.63	591.28	591.31
U	265+76.16	9.63	591.22	591.25
V	265+86.16	9.63	591.16	591.18
℄ Brg. Abut. B	265+95.41	9.63	591.10	591.10
Bk. Abut. B	265+97.66	9.63	591.09	591.09

BEAM 6

Location	Station	Offset	Theoretical Grade Elevations	Theoretical Grade Elevations Adjusted For Dead Load Deflection
Bk. Abut. A	263+32.36	16.04	591.96	591.96
℄ Brg. Abut. A	263+34.61	16.04	591.96	591.96
A	263+44.61	16.04	591.94	591.97
B	263+54.61	16.04	591.93	591.96
C	263+64.61	16.04	591.91	591.95
D	263+74.61	16.04	591.89	591.92
E	263+84.61	16.04	591.87	591.88
℄ Pier 1	263+93.86	16.04	591.85	591.85
F	264+03.86	16.04	591.83	591.84
G	264+13.86	16.04	591.80	591.83
H	264+23.86	16.04	591.77	591.81
I	264+33.86	16.04	591.74	591.78
J	264+43.86	16.04	591.71	591.74
K	264+53.86	16.04	591.67	591.69
℄ Pier 2	264+66.86	16.04	591.63	591.63
L	264+76.86	16.04	591.59	591.60
M	264+86.86	16.04	591.55	591.57
N	264+96.86	16.04	591.50	591.54
O	265+06.86	16.04	591.46	591.50
P	265+16.86	16.04	591.41	591.44
Q	265+26.86	16.04	591.36	591.38
℄ Pier 3	265+39.86	16.04	591.30	591.30
R	265+49.86	16.04	591.25	591.25
S	265+59.86	16.04	591.19	591.22
T	265+69.86	16.04	591.13	591.17
U	265+79.86	16.04	591.08	591.11
V	265+89.86	16.04	591.01	591.04
℄ Brg. Abut. B	265+99.11	16.04	590.96	590.96
Bk. Abut. B	266+01.36	16.04	590.94	590.94

DESIGNED	LAN
CHECKED	LC
DRAWN	LAN
CHECKED	LC

Note:
Offset is measured from ℄ W.B. Roadway & P.G.L.
Negative number indicates distance left of ℄. Positive number indicates distance right of ℄.

INFRASTRUCTURE ENGINEERING | INCORPORATED
33 West Monroe | Suite 1540 | Chicago, IL 60603
P 312.425.9560 | F 312.425.9564 | www.infrastructure-eng.com

W.B. ROADWAY - TOP OF SLAB ELEVATIONS
STRUCTURE NO. 081-0024 (W.B.)
STRUCTURE NO. 081-0025 (E.B.)

SHEET NO. 7	F.A.I. RTE.	SECTION	COUNTY	TOTAL SHEETS	SHEET NO.
77 SHEETS	280	81-1(VB-1)R	ROCK ISLAND	503	343
			CONTRACT NO. 64815		
	FED. ROAD DIST. NO. _	ILLINOIS	FED. AID PROJECT		

STATE OF ILLINOIS
DEPARTMENT OF TRANSPORTATION

BEAM 7

Location	Station	Offset	Theoretical Grade Elevations	Theoretical Grade Elevations Adjusted For Dead Load Deflection
Bk. Abut. C	263+64.39	-16.04	591.91	591.91
℄ Brg. Abut. C	263+66.31	-16.04	591.91	591.91
A	263+76.31	-16.04	591.89	591.91
B	263+86.31	-16.04	591.87	591.90
C	263+96.31	-16.04	591.85	591.87
D	264+06.31	-16.04	591.82	591.84
E	264+16.31	-16.04	591.79	591.80
℄ Pier 4	264+22.31	-16.04	591.78	591.78
F	264+32.31	-16.04	591.75	591.76
G	264+42.31	-16.04	591.71	591.74
H	264+52.31	-16.04	591.68	591.71
I	264+62.31	-16.04	591.64	591.68
J	264+72.31	-16.04	591.61	591.63
K	264+82.31	-16.04	591.57	591.57
℄ Pier 5	264+95.22	-16.04	591.51	591.51
N	265+05.22	-16.04	591.47	591.48
O	265+15.22	-16.04	591.42	591.46
P	265+25.22	-16.04	591.37	591.43
Q	265+35.22	-16.04	591.32	591.39
R	265+45.22	-16.04	591.27	591.33
S	265+55.22	-16.04	591.22	591.25
T	265+65.22	-16.04	591.16	591.17
℄ Pier 6	265+73.60	-16.04	591.11	591.11
U	265+83.60	-16.04	591.05	591.06
V	265+93.60	-16.04	590.99	591.00
W	266+03.60	-16.04	590.93	590.95
X	266+13.60	-16.04	590.86	590.88
Y	266+23.60	-16.04	590.79	590.80
℄ Brg. Abut. D	266+29.60	-16.04	590.75	590.75
Bk. Abut. D	266+31.85	-16.04	590.74	590.74

BEAM 8

Location	Station	Offset	Theoretical Grade Elevations	Theoretical Grade Elevations Adjusted For Dead Load Deflection
Bk. Abut. C	263+65.91	-9.63	592.03	592.03
℄ Brg. Abut. C	263+67.83	-9.63	592.03	592.03
A	263+77.83	-9.63	592.01	592.02
B	263+87.83	-9.63	591.99	592.01
C	263+97.83	-9.63	591.96	591.99
D	264+07.83	-9.63	591.94	591.95
E	264+17.83	-9.63	591.91	591.91
℄ Pier 4	264+23.83	-9.63	591.89	591.89
F	264+33.83	-9.63	591.86	591.87
G	264+43.83	-9.63	591.83	591.86
H	264+53.83	-9.63	591.80	591.84
I	264+63.83	-9.63	591.76	591.80
J	264+73.83	-9.63	591.72	591.75
K	264+83.83	-9.63	591.68	591.70
L	264+93.83	-9.63	591.64	591.64
℄ Pier 5	264+98.93	-9.63	591.62	591.62
N	265+08.93	-9.63	591.57	591.58
O	265+18.93	-9.63	591.52	591.56
P	265+28.93	-9.63	591.48	591.53
Q	265+38.93	-9.63	591.42	591.48
R	265+48.93	-9.63	591.37	591.43
S	265+58.93	-9.63	591.32	591.35
T	265+68.93	-9.63	591.26	591.27
℄ Pier 6	265+77.30	-9.63	591.21	591.21
U	265+87.30	-9.63	591.15	591.15
V	265+97.30	-9.63	591.09	591.10
W	266+07.30	-9.63	591.02	591.05
X	266+17.30	-9.63	590.96	590.98
Y	266+27.30	-9.63	590.89	590.90
℄ Brg. Abut. D	266+33.30	-9.63	590.85	590.85
Bk. Abut. D	266+35.55	-9.63	590.83	590.83

BEAM 9

Location	Station	Offset	Theoretical Grade Elevations	Theoretical Grade Elevations Adjusted For Dead Load Deflection
Bk. Abut. C	263+67.43	-3.21	592.13	592.13
℄ Brg. Abut. C	263+69.35	-3.21	592.13	592.13
A	263+79.35	-3.21	592.11	592.12
B	263+89.35	-3.21	592.08	592.11
C	263+99.35	-3.21	592.06	592.08
D	264+09.35	-3.21	592.03	592.04
E	264+19.35	-3.21	592.01	592.01
℄ Pier 4	264+25.35	-3.21	591.99	591.99
F	264+35.35	-3.21	591.96	591.97
G	264+45.35	-3.21	591.93	591.96
H	264+55.35	-3.21	591.89	591.94
I	264+65.35	-3.21	591.85	591.91
J	264+75.35	-3.21	591.82	591.86
K	264+85.35	-3.21	591.78	591.80
L	264+95.35	-3.21	591.73	591.74
℄ Pier 5	265+02.63	-3.21	591.70	591.70
N	265+12.63	-3.21	591.65	591.67
O	265+22.63	-3.21	591.61	591.64
P	265+32.63	-3.21	591.56	591.61
Q	265+42.63	-3.21	591.51	591.56
R	265+52.63	-3.21	591.45	591.50
S	265+62.63	-3.21	591.40	591.43
T	265+72.63	-3.21	591.34	591.35
℄ Pier 6	265+81.01	-3.21	591.29	591.29
U	265+91.01	-3.21	591.23	591.23
V	266+01.01	-3.21	591.17	591.18
W	266+11.01	-3.21	591.10	591.12
X	266+21.01	-3.21	591.03	591.05
Y	266+31.01	-3.21	590.97	590.97
℄ Brg. Abut. D	266+37.01	-3.21	590.92	590.92
Bk. Abut. D	266+39.26	-3.21	590.91	590.91

Note:
Offset is measured from ℄ E.B. Roadway & P.G.L.
Negative number indicates distance left of ℄. Positive number indicates distance right of ℄.

E.B. ROADWAY - TOP OF SLAB ELEVATIONS
STRUCTURE NO. 081-0024 (W.B.)
STRUCTURE NO. 081-0025 (E.B.)

DESIGNED	LAN
CHECKED	LC
DRAWN	LAN
CHECKED	LC

INFRASTRUCTURE ENGINEERING | INCORPORATED
33 West Monroe | Suite 1540 | Chicago, IL 60603
P 312.425.9560 | F 312.425.9564 | www.infrastructure-eng.com

SHEET NO. 8	F.A.I. RTE.	SECTION	COUNTY	TOTAL SHEETS	SHEET NO.
77 SHEETS	280	81-1(VB-1)R	ROCK ISLAND	503	344
			CONTRACT NO. 64815		
	FED. ROAD DIST. NO. _	ILLINOIS	FED. AID PROJECT		

STATE OF ILLINOIS
DEPARTMENT OF TRANSPORTATION

℄ E.B. ROADWAY & P.G.L.

Location	Station	Offset	Theoretical Grade Elevations	Theoretical Grade Elevations Adjusted For Dead Load Deflection
Bk. Abut. C	263+68.19	0.00	592.18	592.18
℄ Brg. Abut. C	263+70.11	0.00	592.17	592.17
A	263+80.11	0.00	592.15	592.17
B	263+90.11	0.00	592.13	592.15
C	264+00.11	0.00	592.11	592.13
D	264+10.11	0.00	592.08	592.09
E	264+20.11	0.00	592.05	592.05
℄ Pier 4	264+26.11	0.00	592.04	592.04
F	264+36.11	0.00	592.01	592.02
G	264+46.11	0.00	591.97	592.01
H	264+56.11	0.00	591.94	591.99
I	264+66.11	0.00	591.90	591.96
J	264+76.11	0.00	591.86	591.91
K	264+86.11	0.00	591.82	591.85
L	264+96.11	0.00	591.78	591.79
℄ Pier 5	265+04.49	0.00	591.74	591.74
N	265+14.49	0.00	591.70	591.71
O	265+24.49	0.00	591.65	591.68
P	265+34.49	0.00	591.60	591.65
Q	265+44.49	0.00	591.55	591.60
R	265+54.49	0.00	591.49	591.54
S	265+64.49	0.00	591.44	591.47
T	265+74.49	0.00	591.38	591.39
℄ Pier 6	265+82.86	0.00	591.33	591.33
U	265+92.86	0.00	591.27	591.27
V	266+02.86	0.00	591.20	591.22
W	266+12.86	0.00	591.14	591.16
X	266+22.86	0.00	591.07	591.09
Y	266+32.86	0.00	591.00	591.01
℄ Brg. Abut. D	266+38.86	0.00	590.96	590.96
Bk. Abut. D	266+41.11	0.00	590.94	590.94

BEAM 10

Location	Station	Offset	Theoretical Grade Elevations	Theoretical Grade Elevations Adjusted For Dead Load Deflection
Bk. Abut. C	263+68.95	3.21	592.13	592.13
℄ Brg. Abut. C	263+70.87	3.21	592.12	592.12
A	263+80.87	3.21	592.10	592.12
B	263+90.87	3.21	592.08	592.10
C	264+00.87	3.21	592.06	592.07
D	264+10.87	3.21	592.03	592.04
E	264+20.87	3.21	592.00	592.00
℄ Pier 4	264+26.87	3.21	591.98	591.98
F	264+36.87	3.21	591.95	591.97
G	264+46.87	3.21	591.92	591.96
H	264+56.87	3.21	591.89	591.94
I	264+66.87	3.21	591.85	591.91
J	264+76.87	3.21	591.81	591.86
K	264+86.87	3.21	591.77	591.80
L	264+96.87	3.21	591.73	591.74
℄ Pier 5	265+06.34	3.21	591.68	591.68
N	265+16.34	3.21	591.64	591.65
O	265+26.34	3.21	591.59	591.62
P	265+36.34	3.21	591.54	591.59
Q	265+46.34	3.21	591.49	591.54
R	265+56.34	3.21	591.43	591.48
S	265+66.34	3.21	591.38	591.41
T	265+76.34	3.21	591.32	591.33
℄ Pier 6	265+84.71	3.21	591.27	591.27
U	265+94.71	3.21	591.21	591.21
V	266+04.71	3.21	591.14	591.16
W	266+14.71	3.21	591.08	591.10
X	266+24.71	3.21	591.01	591.03
Y	266+34.71	3.21	590.94	590.95
℄ Brg. Abut. D	266+40.71	3.21	590.90	590.90
Bk. Abut. D	266+42.96	3.21	590.88	590.88

BEAM 11

Location	Station	Offsel	Theoretical Grade Elevations	Theoretical Grade Elevations Adjusted For Dead Load Deflection
Bk. Abut. C	263+70.48	9.63	592.02	592.02
℄ Brg. Abut. C	263+72.39	9.63	592.02	592.02
A	263+82.39	9.63	592.00	592.01
B	263+92.39	9.63	591.98	591.99
C	264+02.39	9.63	591.95	591.97
D	264+12.39	9.63	591.93	591.93
E	264+22.39	9.63	591.90	591.90
℄ Pier 4	264+28.39	9.63	591.88	591.88
F	264+38.39	9.63	591.85	591.87
G	264+48.39	9.63	591.81	591.86
H	264+58.39	9.63	591.78	591.84
I	264+68.39	9.63	591.74	591.81
J	264+78.39	9.63	591.70	591.76
K	264+88.39	9.63	591.66	591.70
L	264+98.39	9.63	591.62	591.63
℄ Pier 5	265+10.04	9.63	591.57	591.57
N	265+20.04	9.63	591.52	591.53
O	265+30.04	9.63	591.47	591.49
P	265+40.04	9.63	591.42	591.46
Q	265+50.04	9.63	591.37	591.41
R	265+60.04	9.63	591.31	591.35
S	265+70.04	9.63	591.25	591.28
T	265+80.04	9.63	591.20	591.21
℄ Pier 6	265+88.42	9.63	591.14	591.14
U	265+98.42	9.63	591.08	591.09
V	266+08.42	9.63	591.02	591.03
W	266+18.42	9.63	590.95	590.97
X	266+28.42	9.63	590.88	590.90
Y	266+38.42	9.63	590.81	590.82
℄ Brg. Abut. D	266+44.42	9.63	590.77	590.77
Bk. Abut. D	266+46.67	9.63	590.75	590.75

E.B. ROADWAY - TOP OF SLAB ELEVATIONS
STRUCTURE NO. 081-0024 (W.B.)
STRUCTURE NO. 081-0025 (E.B.)

DESIGNED	LAN
CHECKED	LC
DRAWN	LAN
CHECKED	LC

Note:
Offset is measured from ℄ E.B. Roadway & P.G.L.
Negative number indicates distance left of ℄. Positive number indicates distance right of ℄.

INFRASTRUCTURE ENGINEERING | INCORPORATED
33 West Monroe | Suite 1540 | Chicago, IL 60603
P 312.425.9560 | F 312.425.9564 | www.infrastructure-eng.com

SHEET NO. 9	F.A.I. RTE.	SECTION	COUNTY	TOTAL SHEETS	SHEET NO.
77 SHEETS	280	81-1(VB-1)R	ROCK ISLAND	503	345
			CONTRACT NO. 64815		
	FED. ROAD DIST. NO. _	ILLINOIS	FED. AID PROJECT		

STATE OF ILLINOIS
DEPARTMENT OF TRANSPORTATION

BEAM 12

Location	Station	Offset	Theoretical Grade Elevations	Theoretical Grade Elevations Adjusted For Dead Load Deflection
Bk. Abut. C	263+72.00	16.04	591.90	591.90
℄ Brg. Abut. C	263+73.91	16.04	591.89	591.89
A	263+83.91	16.04	591.87	591.89
B	263+93.91	16.04	591.85	591.87
C	264+03.91	16.04	591.83	591.84
D	264+13.91	16.04	591.80	591.80
E	264+23.91	16.04	591.77	591.77
℄ Pier 4	264+29.91	16.04	591.75	591.75
F	264+39.91	16.04	591.72	591.74
G	264+49.91	16.04	591.69	591.73
H	264+59.91	16.04	591.65	591.72
I	264+69.91	16.04	591.62	591.69
J	264+79.91	16.04	591.58	591.64
K	264+89.91	16.04	591.53	591.58
L	264+99.91	16.04	591.49	591.51
℄ Pier 5	265+13.75	16.04	591.43	591.43
N	265+23.75	16.04	591.38	591.39
O	265+33.75	16.04	591.33	591.35
P	265+43.75	16.04	591.28	591.32
Q	265+53.75	16.04	591.22	591.27
R	265+63.75	16.04	591.17	591.21
S	265+73.75	16.04	591.11	591.14
T	265+83.75	16.04	591.05	591.06
℄ Pier 6	265+92.12	16.04	591.00	591.00
U	266+02.12	16.04	590.94	590.94
V	266+12.12	16.04	590.87	590.89
W	266+22.12	16.04	590.81	590.83
X	266+32.12	16.04	590.74	590.76
Y	266+42.12	16.04	590.67	590.67
℄ Brg. Abut. D	266+48.12	16.04	590.62	590.62
Bk. Abut. D	266+50.37	16.04	590.61	590.61

BEAM 13

Location	Station	Offset	Theoretical Grade Elevations	Theoretical Grade Elevations Adjusted For Dead Load Deflection
Bk. Abut. C	263+73.40	21.96	591.77	591.77
℄ Brg. Abut. C	263+75.32	21.96	591.77	591.77
A	263+85.32	21.96	591.75	591.76
B	263+95.32	21.96	591.72	591.74
C	264+05.32	21.96	591.70	591.71
D	264+15.32	21.96	591.67	591.67
E	264+25.32	21.96	591.64	591.64
℄ Pier 4	264+31.32	21.96	591.63	591.63
F	264+41.32	21.96	591.59	591.62
G	264+51.32	21.96	591.56	591.61
H	264+61.32	21.96	591.52	591.60
I	264+71.32	21.96	591.49	591.57
J	264+81.32	21.96	591.45	591.53
K	264+91.32	21.96	591.41	591.47
L	265+01.32	21.96	591.36	591.40
M	265+11.32	21.96	591.32	591.33
℄ Pier 5	265+17.16	21.96	591.29	591.29
N	265+27.16	21.96	591.24	591.24
O	265+37.16	21.96	591.19	591.21
P	265+47.16	21.96	591.14	591.17
Q	265+57.16	21.96	591.08	591.13
R	265+67.16	21.96	591.03	591.07
S	265+77.16	21.96	590.97	590.99
T	265+87.16	21.96	590.91	590.92
℄ Pier 6	265+95.54	21.96	590.86	590.86
U	266+05.54	21.96	590.79	590.80
V	266+15.54	21.96	590.73	590.74
W	266+25.54	21.96	590.66	590.68
X	266+35.54	21.96	590.59	590.61
Y	266+45.54	21.96	590.52	590.53
℄ Brg. Abut. D	266+51.54	21.96	590.47	590.47
Bk. Abut. D	266+53.79	21.96	590.46	590.46

E.B. ROADWAY - TOP OF SLAB ELEVATIONS
STRUCTURE NO. 081-0024 (W.B.)
STRUCTURE NO. 081-0025 (E.B.)

DESIGNED	LAN
CHECKED	LC
DRAWN	LAN
CHECKED	LC

Note:
Offset is measured from ℄ E.B. Roadway & P.G.L.
Negative number indicates distance left of ℄. Positive number indicates distance right of ℄.

INFRASTRUCTURE ENGINEERING | INCORPORATED
33 West Monroe | Suite 1540 | Chicago, IL 60603
P 312.425.9560 | F 312.425.9564 | www.infrastructure-eng.com

SHEET NO. 10	F.A.I. RTE.	SECTION	COUNTY	TOTAL SHEETS	SHEET NO.
77 SHEETS	280	81-1(VB-1)R	ROCK ISLAND	503	346
			CONTRACT NO. 64815		
	FED. ROAD DIST. NO. _	ILLINOIS	FED. AID PROJECT		

STATE OF ILLINOIS
DEPARTMENT OF TRANSPORTATION

NORTH EDGE OF SHOULDER

Location	Station	Offset	Theoretical Grade Elevations
W. End W. Appr. Pav't.	262+80.40	-22.00	591.87
A1	262+90.40	-22.00	591.87
A2	263+00.40	-22.00	591.86
E. End W. Appr. Pav't.	263+10.40	-22.00	591.86

NORTH EDGE OF PAVEMENT

Location	Station	Offset	Theoretical Grade Elevations
W. End W. Appr. Pav't.	262+86.17	-12.00	592.08
A1	262+96.17	-12.00	592.07
A2	263+06.17	-12.00	592.07
E. End W. Appr. Pav't.	263+16.17	-12.00	592.06

℄ W.B. ROADWAY & PGL

Location	Station	Offset	Theoretical Grade Elevations
W. End W. Appr. Pav't.	262+93.10	0.00	592.26
A1	263+03.10	0.00	592.26
A2	263+13.10	0.00	592.25
E. End W. Appr. Pav't.	263+23.10	0.00	592.24

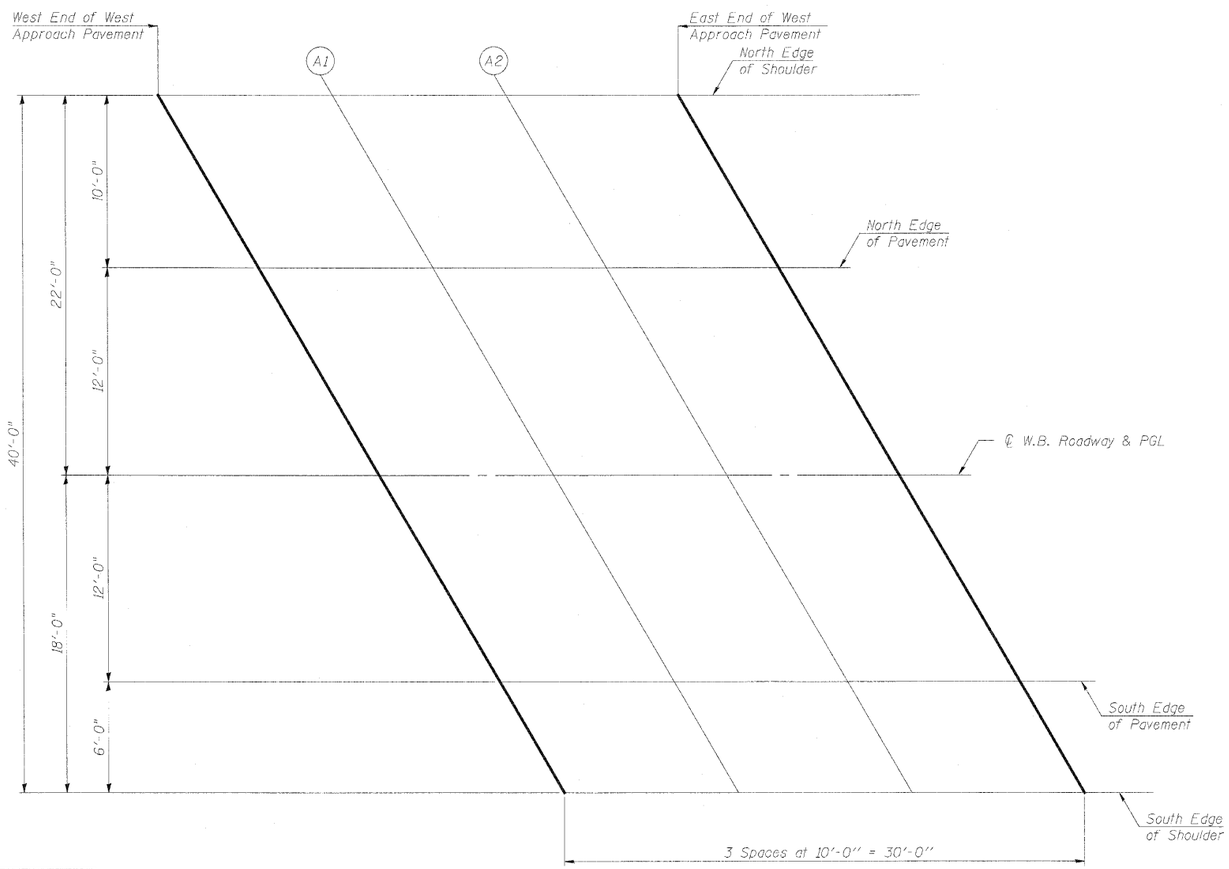

PLAN

SOUTH EDGE OF PAVEMENT

Location	Station	Offset	Theoretical Grade Elevations
W. End W. Appr. Pav't.	263+00.03	12.00	592.07
A1	263+10.03	12.00	592.07
A2	263+20.03	12.00	592.06
E. End W. Appr. Pav't.	263+30.03	12.00	592.05

SOUTH EDGE OF SHOULDER

Location	Station	Offset	Theoretical Grade Elevations
W. End W. Appr. Pav't.	263+03.49	18.00	591.95
A1	263+13.49	18.00	591.94
A2	263+23.49	18.00	591.93
E. End W. Appr. Pav't.	263+33.49	18.00	591.92

TOP OF W.B. ROADWAY
WEST APPROACH SLAB ELEVATIONS
STRUCTURE NO. 081-0024 (W.B.)
STRUCTURE NO. 081-0025 (E.B.)

DESIGNED	LAN
CHECKED	LC
DRAWN	LAN
CHECKED	LC

INFRASTRUCTURE ENGINEERING | INCORPORATED
33 West Monroe | Suite 1540 | Chicago, IL 60603
P 312.425.9560 | F 312.425.9564 | www.infrastructure-eng.com

SHEET NO. 11	F.A.I. RTE.	SECTION	COUNTY	TOTAL SHEETS	SHEET NO.
77 SHEETS	280	81-1(VB-1)R	ROCK ISLAND	503	347
			CONTRACT NO. 64815		
	FED. ROAD DIST. NO. _	ILLINOIS	FED. AID PROJECT		

STATE OF ILLINOIS
DEPARTMENT OF TRANSPORTATION

NORTH EDGE OF SHOULDER

Location	Station	Offset	Theoretical Grade Elevations
W. End E. Appr. Pav't.	265+79.40	-22.00	590.95
A3	265+89.40	-22.00	590.89
A4	265+99.40	-22.00	590.83
E. End E. Appr. Pav't.	266+09.40	-22.00	590.77

NORTH EDGE OF PAVEMENT

Location	Station	Offset	Theoretical Grade Elevations
W. End E. Appr. Pav't.	265+85.17	-12.00	591.13
A3	265+95.17	-12.00	591.07
A4	266+05.17	-12.00	591.00
E. End E. Appr. Pav't.	266+15.17	-12.00	590.94

℄ W.B. ROADWAY & PGL

Location	Station	Offset	Theoretical Grade Elevations
W. End E. Appr. Pav't.	265+92.10	0.00	591.27
A3	266+02.10	0.00	591.21
A4	266+12.10	0.00	591.14
E. End E. Appr. Pav't.	266+22.10	0.00	591.08

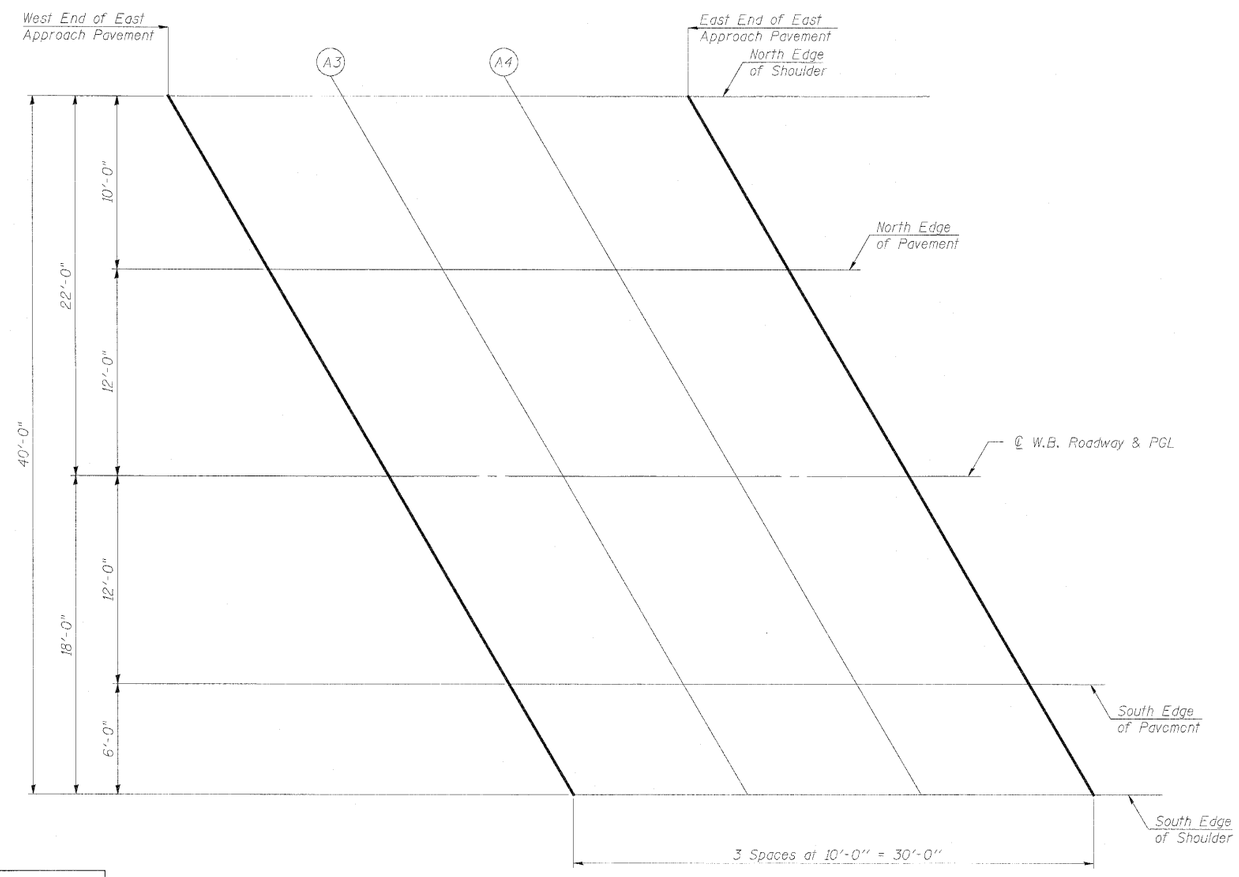

PLAN

SOUTH EDGE OF PAVEMENT

Location	Station	Offset	Theoretical Grade Elevations
W. End E. Appr. Pav't.	265+99.03	12.00	591.04
A3	266+09.03	12.00	590.98
A4	266+19.03	12.00	590.91
E. End E. Appr. Pav't.	266+29.03	12.00	590.84

SOUTH EDGE OF SHOULDER

Location	Station	Offset	Theoretical Grade Elevations
W. End E. Appr. Pav't.	266+02.49	18.00	590.89
A3	266+12.49	18.00	590.83
A4	266+22.49	18.00	590.76
E. End E. Appr. Pav't.	266+32.49	18.00	590.69

TOP OF W.B. ROADWAY EAST APPROACH SLAB ELEVATIONS STRUCTURE NO. 081-0024 (W.B.) STRUCTURE NO. 081-0025 (E.B.)

DESIGNED	LAN
CHECKED	LC
DRAWN	LAN
CHECKED	LC

INFRASTRUCTURE ENGINEERING | INCORPORATED
33 West Monroe | Suite 1540 | Chicago, IL 60603
P 312.425.9560 | F 312.425.9564 | www.infrastructure-eng.com

SHEET NO. 12	F.A.I. RTE.	SECTION	COUNTY	TOTAL SHEETS	SHEET NO.
77 SHEETS	280	81-1(VB-1)R	ROCK ISLAND	503	348
			CONTRACT NO. 64815		
	FED. ROAD DIST. NO. _	ILLINOIS	FED. AID PROJECT		

STATE OF ILLINOIS
DEPARTMENT OF TRANSPORTATION

NORTH EDGE OF SHOULDER

Location	Station	Offset	Theoretical Grade Elevations
W. End W. Appr. Pav't.	263+33.92	-18.00	591.92
A1	263+43.92	-18.00	591.90
A2	263+53.92	-18.00	591.89
E. End W. Appr. Pav't.	263+63.92	-18.00	591.87

NORTH EDGE OF PAVEMENT

Location	Station	Offset	Theoretical Grade Elevations
W. End W. Appr. Pav't.	263+35.34	-12.00	592.04
A1	263+45.34	-12.00	592.03
A2	263+55.34	-12.00	592.01
E. End W. Appr. Pav't.	263+65.34	-12.00	592.00

℄ E.B. ROADWAY & PGL

Location	Station	Offset	Theoretical Grade Elevations
W. End W. Appr. Pav't.	263+38.19	0.00	592.22
A1	263+48.19	0.00	592.21
A2	263+58.19	0.00	592.20
E. End W. Appr. Pav't.	263+68.19	0.00	592.18

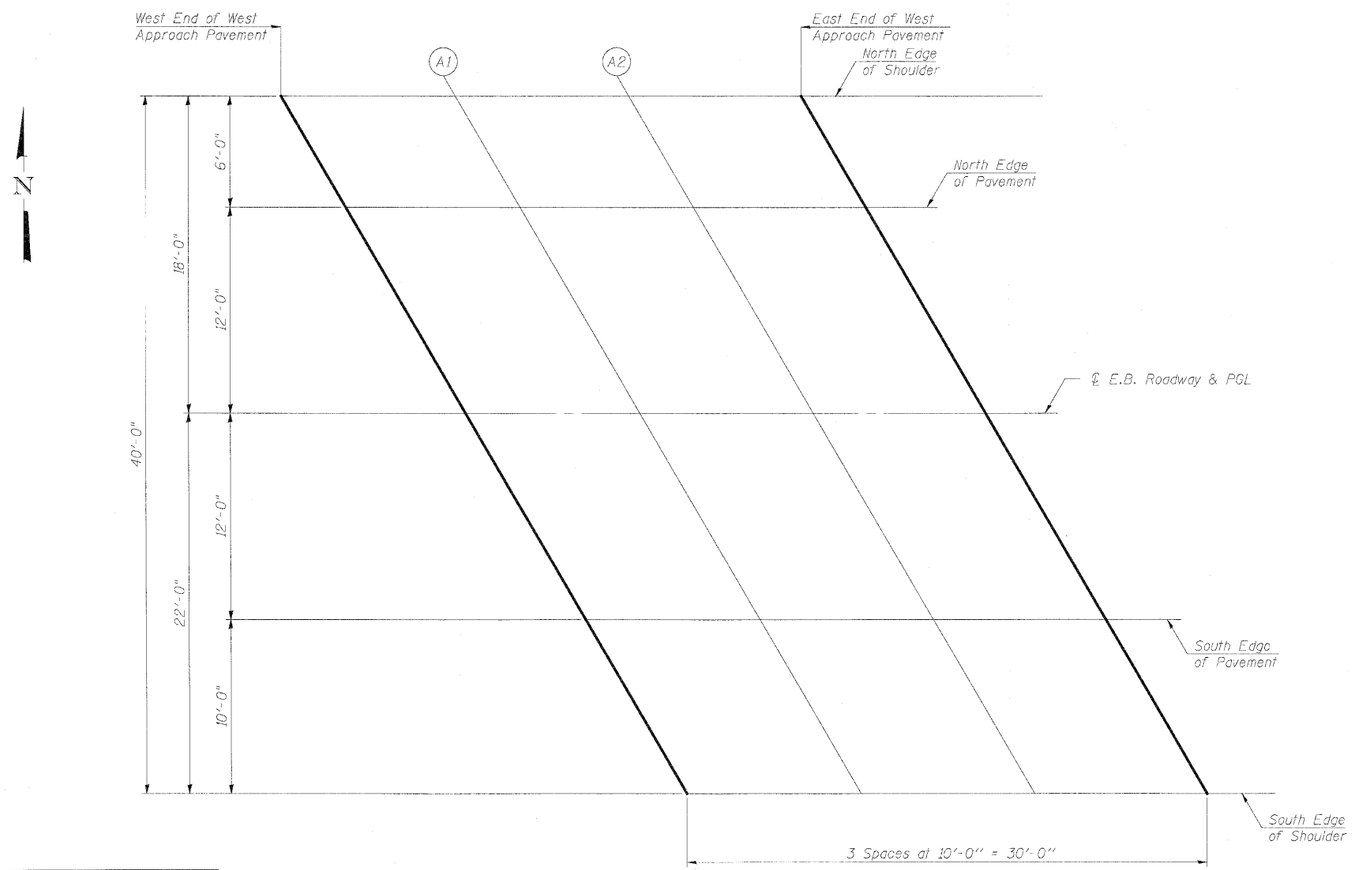

PLAN

SOUTH EDGE OF PAVEMENT

Location	Station	Offset	Theoretical Grade Elevations
W. End W. Appr. Pav't.	263+41.04	12.00	592.03
A1	263+51.04	12.00	592.02
A2	263+61.04	12.00	592.00
E. End W. Appr. Pav't.	263+71.04	12.00	591.98

SOUTH EDGE OF SHOULDER

Location	Station	Offset	Theoretical Grade Elevations
W. End W. Appr. Pav't.	263+43.41	22.00	591.82
A1	263+53.41	22.00	591.81
A2	263+63.41	22.00	591.79
E. End W. Appr. Pav't.	263+73.41	22.00	591.77

TOP OF E.B. ROADWAY WEST APPROACH SLAB ELEVATIONS STRUCTURE NO. 081-0024 (W.B.) STRUCTURE NO. 081-0025 (E.B.)

DESIGNED	LAN
CHECKED	LC
DRAWN	LAN
CHECKED	LC

INFRASTRUCTURE ENGINEERING | INCORPORATED
33 West Monroe | Suite 1540 | Chicago, IL 60603
P 312.425.9560 | F 312.425.9564 | www.infrastructure-eng.com

SHEET NO. 13	F.A.I. RTE.	SECTION	COUNTY	TOTAL SHEETS	SHEET NO.
77 SHEETS	280	81-1(VB-1)R	ROCK ISLAND	503	349
			CONTRACT NO. 64815		
	FED. ROAD DIST. NO. _	ILLINOIS	FED. AID PROJECT		

STATE OF ILLINOIS
DEPARTMENT OF TRANSPORTATION

NORTH EDGE OF SHOULDER

Location	Station	Offset	Theoretical Grade Elevations
W. End E. Appr. Pav't.	266+30.72	-18.00	590.71
A3	266+40.72	-18.00	590.63
A4	266+50.72	-18.00	590.56
E. End E. Appr. Pav't.	266+60.72	-18.00	590.49

NORTH EDGE OF PAVEMENT

Location	Station	Offset	Theoretical Grade Elevations
W. End E. Appr. Pav't.	266+34.18	-12.00	590.81
A3	266+44.18	-12.00	590.73
A4	266+54.18	-12.00	590.66
E. End E. Appr. Pav't.	266+64.18	-12.00	590.59

℄ E.B. ROADWAY & PGL

Location	Station	Offset	Theoretical Grade Elevations
W. End E. Appr. Pav't.	266+41.11	0.00	590.94
A3	266+51.11	0.00	590.87
A4	266+61.11	0.00	590.80
E. End E. Appr. Pav't.	266+71.11	0.00	590.72

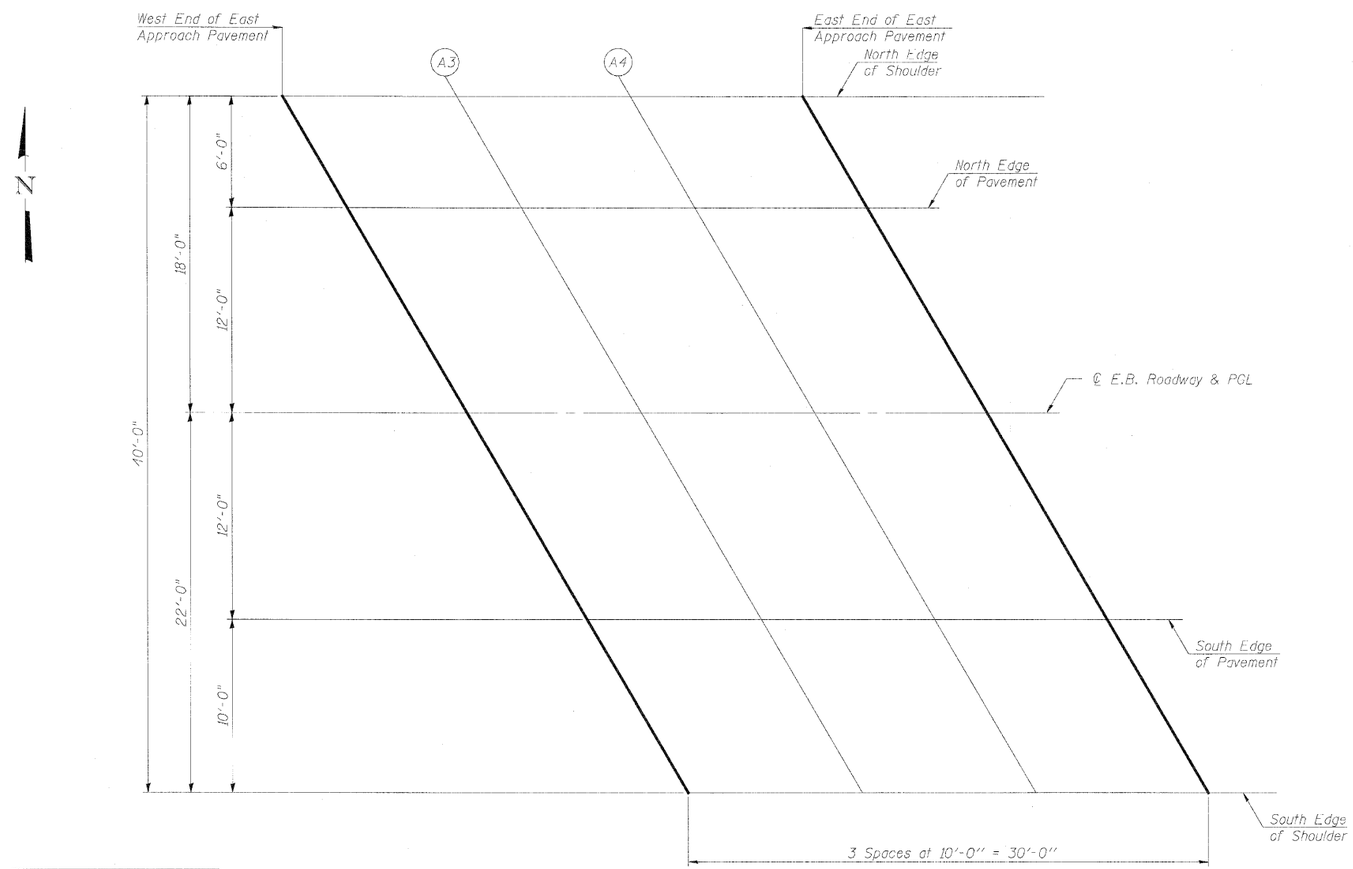

PLAN

SOUTH EDGE OF PAVEMENT

Location	Station	Offset	Theoretical Grade Elevations
W. End E. Appr. Pav't.	266+48.04	12.00	590.71
A3	266+58.04	12.00	590.63
A4	266+68.04	12.00	590.56
E. End E. Appr. Pav't.	266+78.04	12.00	590.48

SOUTH EDGE OF SHOULDER

Location	Station	Offset	Theoretical Grade Elevations
W. End E. Appr. Pav't.	266+53.81	22.00	590.46
A3	266+63.81	22.00	590.38
A4	266+73.81	22.00	590.30
E. End E. Appr. Pav't.	266+83.81	22.00	590.22

TOP OF E.B. ROADWAY
EAST APPROACH SLAB ELEVATIONS
STRUCTURE NO. 081-0024 (W.B.)
STRUCTURE NO. 081-0025 (E.B.)

DESIGNED	LAN
CHECKED	LC
DRAWN	LAN
CHECKED	LC

INFRASTRUCTURE ENGINEERING | INCORPORATED
33 West Monroe | Suite 1540 | Chicago, IL 60603
P 312.425.9560 | F 312.425.9564 | www.infrastructure-eng.com

SHEET NO. 14	F.A.I. RTE.	SECTION	COUNTY	TOTAL SHEETS	SHEET NO.
77 SHEETS	280	81-1(VB-1)R	ROCK ISLAND	503	350
			CONTRACT NO. 64815		
	FED. ROAD DIST. NO. _	ILLINOIS	FED. AID PROJECT		

STATE OF ILLINOIS
DEPARTMENT OF TRANSPORTATION

* Order a_{500}(E) & a_{501}(E) bars full length. Cut to fit skew and use remainder of bars in opposite end.

** Place 6 bars between Beams 1A & 1 and 7 bars between each existing beam from Beam 1 to Beam 6.

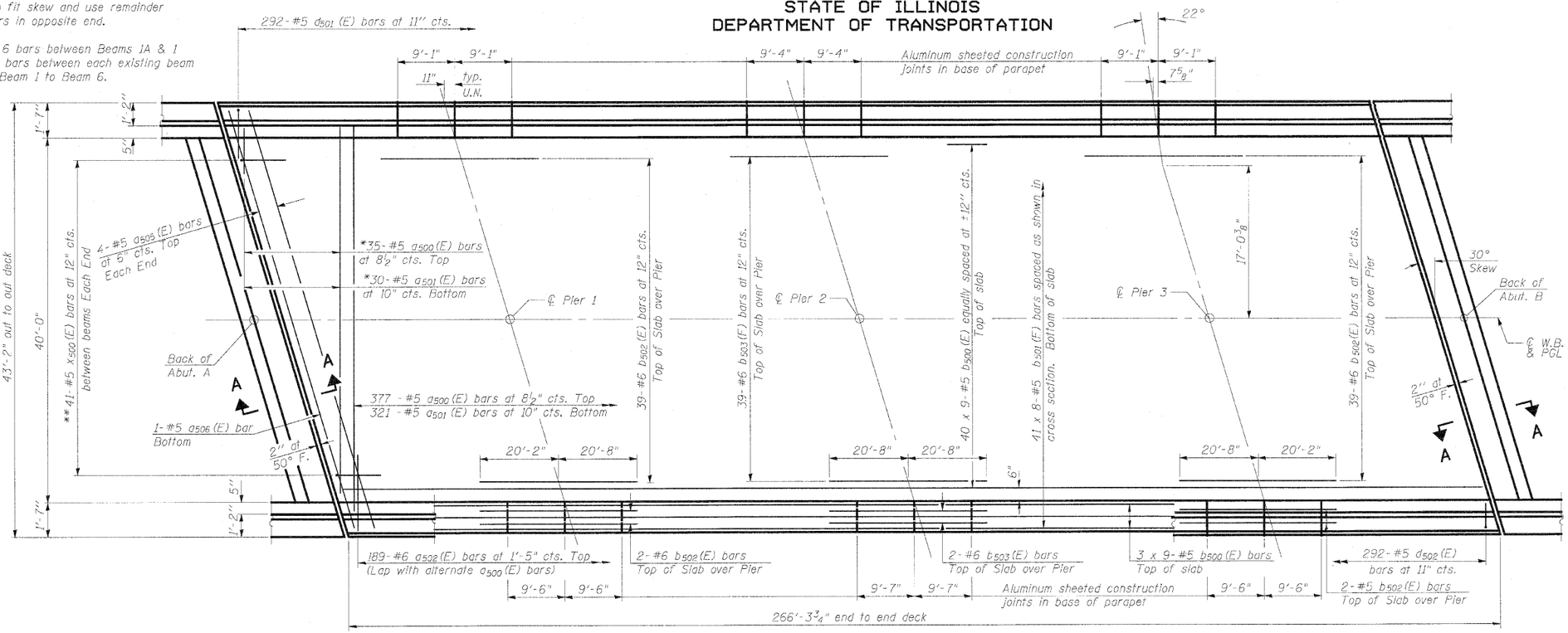

PLAN

MINIMUM BAR LAP
(Slab)
#5 bar = 3'-3"

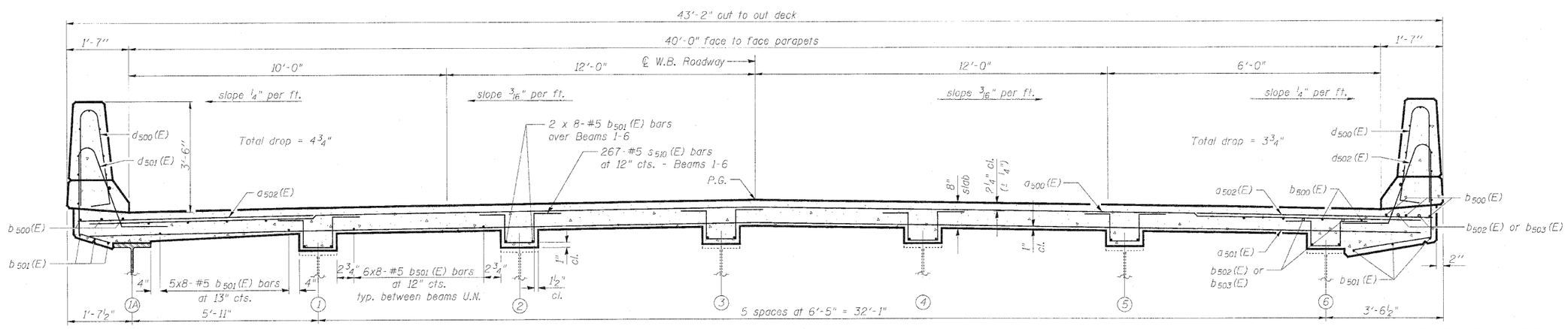

NEAR MIDSPAN **NEAR PIER**

CROSS SECTION
(Looking East)

W.B. ROADWAY DECK
STRUCTURE NO. 081-0024 (W.B.)
STRUCTURE NO. 081-0025 (E.B.)

DESIGNED	ASJ
CHECKED	SPK
DRAWN	ASJ
CHECKED	SPK

Notes:
Bars indicated thus 20 x 3-#5 etc. indicates 20 lines of bars with 3 lengths per line.
See sheets 21 and 22 of 77 for superstructure details and Bill of Material.
See sheets 17, 18 and 21 of 77 for parapet reinforcement.
Dimensions are based on Rolled Rail Strip Seal Joint. If the Contractor elects to use the Welded Rail Strip Seal Joint, deck dimensions may require adjustments to satisfy the details on sheet 29 of 77.

INFRASTRUCTURE ENGINEERING INCORPORATED
33 West Monroe | Suite 1540 | Chicago, IL 60603
P 312.425.9560 | F 312.425.9564 | www.infrastructure-eng.com

SHEET NO. 15	F.A.I. RTE.	SECTION	COUNTY	TOTAL SHEETS	SHEET NO.
77 SHEETS	280	81-1(VB-1)R	ROCK ISLAND	503	351
			CONTRACT NO. 64815		
	FED. ROAD DIST. NO. _	ILLINOIS	FED. AID PROJECT		

* See Field Cutting Diagram on sheet 22 of 77.
** Place 7 bars between each existing beam from Beam 7 to Beam 12 and 6 bars between Beam 12 and Beam 13.

STATE OF ILLINOIS
DEPARTMENT OF TRANSPORTATION

Notes:
Bars indicated thus 20 x 3-#5 etc. indicates 20 lines of bars with 3 lengths per line.
See sheets 21 and 22 of 77 for superstructure details and Bill of Material.
See sheets 19, 20 and 21 of 77 for parapet reinforcement.
Dimensions are based on Rail Strip Seal Joint. If the Contractor elects to use the Welded Rail Strip Seal Joint, deck dimensions may require adjustments to satisfy the details on sheet 29 of 77.

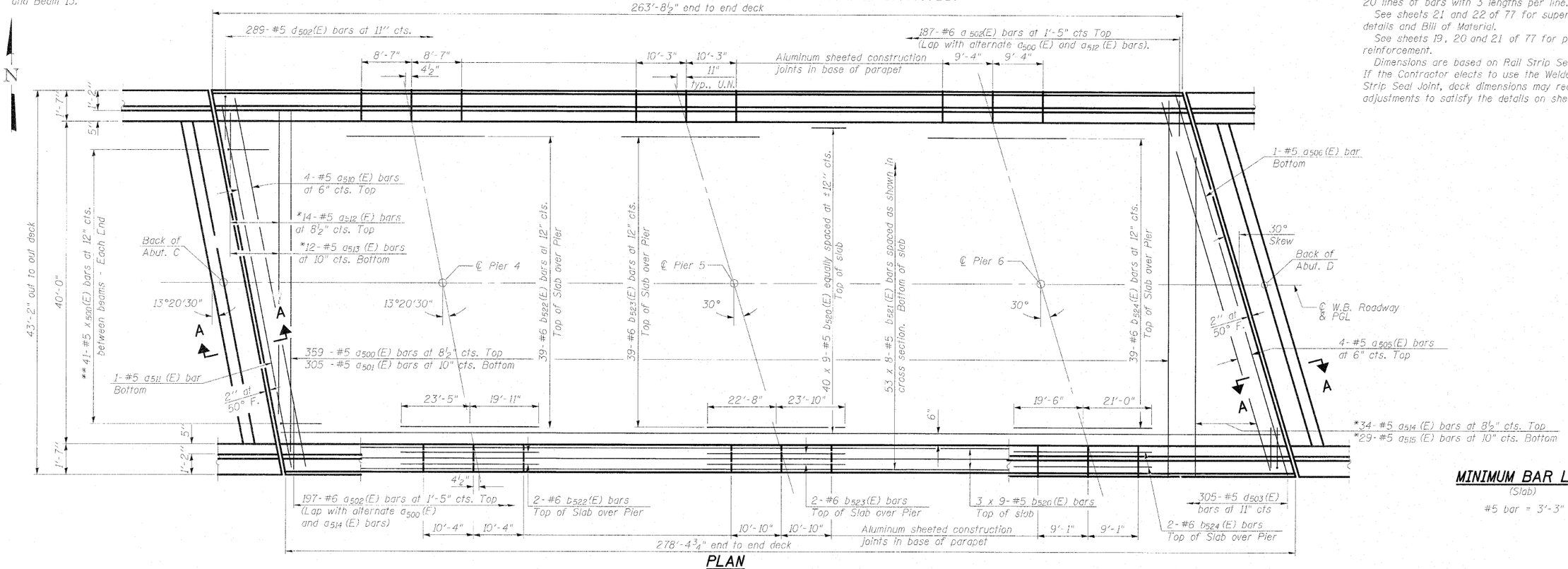

PLAN

MINIMUM BAR LAP
(Slab)
#5 bar = 3'-3"

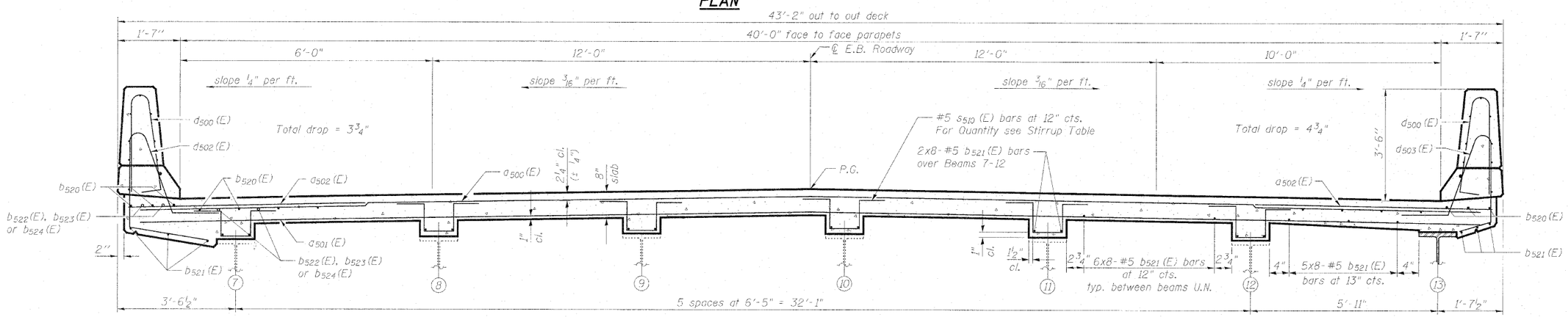

NEAR PIER

NEAR MIDSPAN

CROSS SECTION
(Looking East)

STIRRUP TABLE

Beam	s_{510} (E) Quantity
7	266
8	268
9	270
10	272
11	275
12	277

E.B. ROADWAY DECK
STRUCTURE NO. 081-0024 (W.B.)
STRUCTURE NO. 081-0025 (E.B.)

DESIGNED	ASJ
CHECKED	SPK
DRAWN	ASJ
CHECKED	SPK

INFRASTRUCTURE ENGINEERING | INCORPORATED
33 West Monroe | Suite 1540 | Chicago, IL 60603
P 312.425.9560 | F 312.425.9564 | www.infrastructure-eng.com

SHEET NO. 16	F.A.I. RTE.	SECTION	COUNTY	TOTAL SHEETS	SHEET NO.
77 SHEETS	280	81-1(VB-1)R	ROCK ISLAND	503	352
			CONTRACT NO. 64815		
	FED. ROAD DIST. NO. _	ILLINOIS	FED. AID PROJECT		

STATE OF ILLINOIS
DEPARTMENT OF TRANSPORTATION

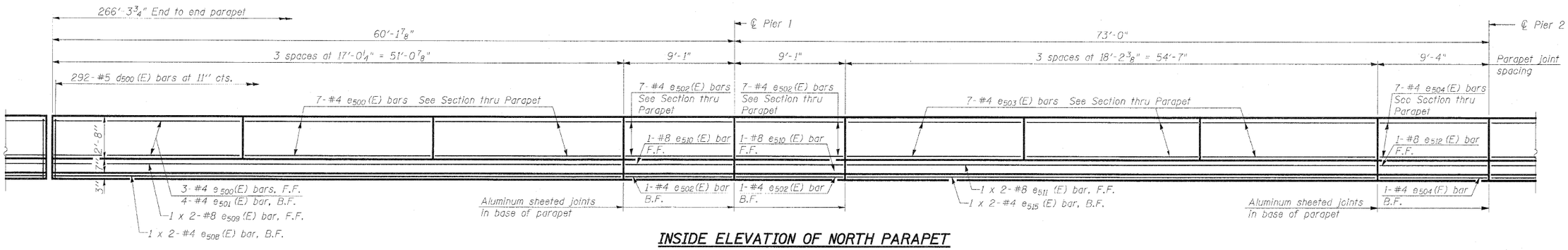

INSIDE ELEVATION OF NORTH PARAPET

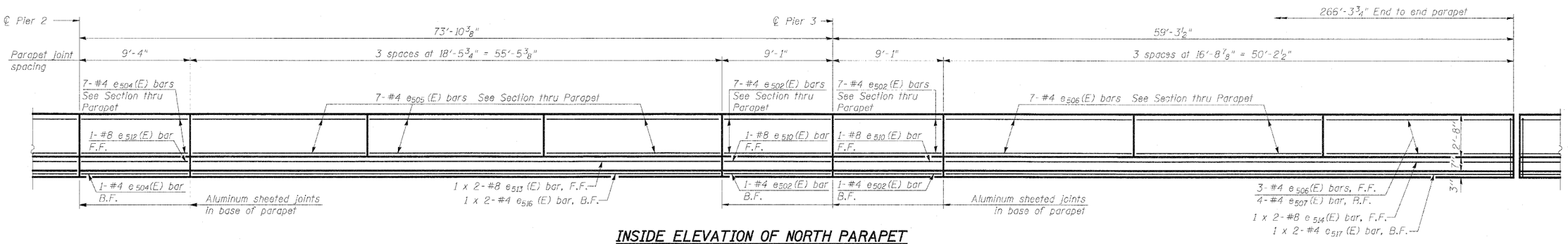

INSIDE ELEVATION OF NORTH PARAPET

MINIMUM BAR LAP

(Parapet)

#4 bar = 2'-0"
#5 bar = 5'-2"

Note:
See sheet 21 of 77 for parapet details.
See sheet 22 of 77 for Bill of Material.
Dimensions are measured along inside face of parapet.

DESIGNED	ASJ
CHECKED	SPK
DRAWN	ASJ
CHECKED	SPK

INFRASTRUCTURE ENGINEERING | INCORPORATED
33 West Monroe | Suite 1540 | Chicago, IL 60603
P 312.425.9560 | F 312.425.9564 | www.infrastructure-eng.com

W.B. ROADWAY NORTH PARAPET
STRUCTURE NO. 081-0024 (W.B.)
STRUCTURE NO. 081-0025 (E.B.)

SHEET NO.17	F.A.I. RTE.	SECTION	COUNTY	TOTAL SHEETS	SHEET NO.
77 SHEETS	280	81-1(VB-1)R	ROCK ISLAND	503	353
			CONTRACT NO. 64815		
	FED. ROAD DIST. NO. _	ILLINOIS	FED. AID PROJECT		

STATE OF ILLINOIS
DEPARTMENT OF TRANSPORTATION

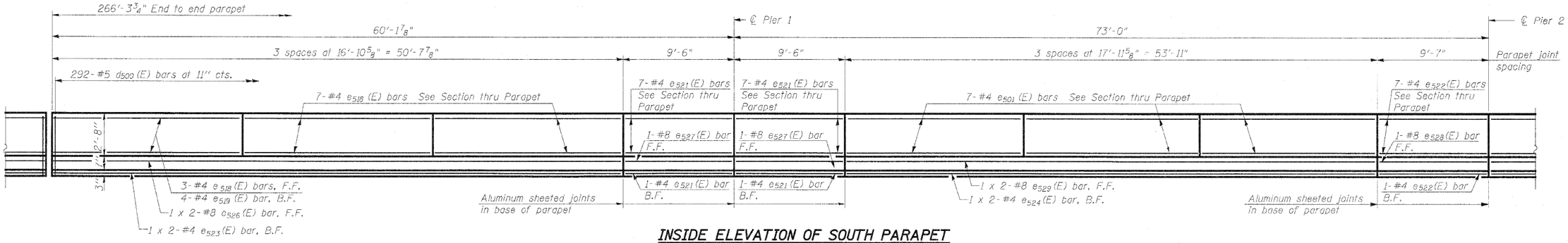

INSIDE ELEVATION OF SOUTH PARAPET

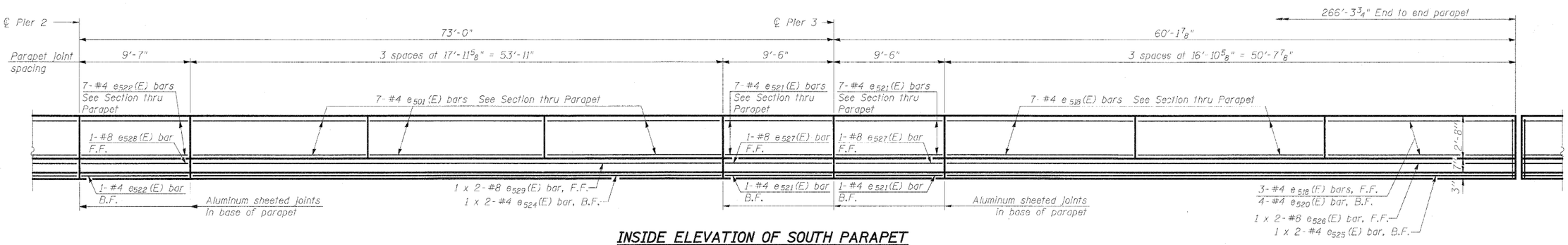

INSIDE ELEVATION OF SOUTH PARAPET

MINIMUM BAR LAP

(Parapet)

#4 bar = 2'-0"
#5 bar = 5'-2"

DESIGNED	ASJ
CHECKED	SPK
DRAWN	ASJ
CHECKED	SPK

Note:
See sheet 21 of 77 for parapet details.
See sheet 22 of 77 for Bill of Material.
Dimensions are measured along inside face of parapet.

W.B. ROADWAY SOUTH PARAPET
STRUCTURE NO. 081-0024 (W.B.)
STRUCTURE NO. 081-0025 (E.B.)

INFRASTRUCTURE ENGINEERING | INCORPORATED
33 West Monroe | Suite 1540 | Chicago, IL 60603
P 312.425.9560 | F 312.425.9564 | www.infrastructure-eng.com

SHEET NO. 18	F.A.I. RTE.	SECTION	COUNTY	TOTAL SHEETS	SHEET NO.
77 SHEETS	280	81-1(VB-1)R	ROCK ISLAND	503	354
			CONTRACT NO. 64815		
	FED. ROAD DIST. NO. _	ILLINOIS	FED. AID PROJECT		

STATE OF ILLINOIS
DEPARTMENT OF TRANSPORTATION

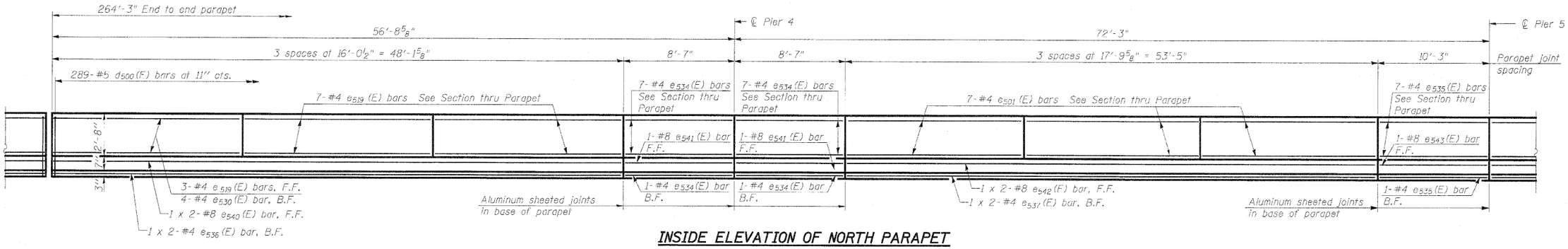

INSIDE ELEVATION OF NORTH PARAPET

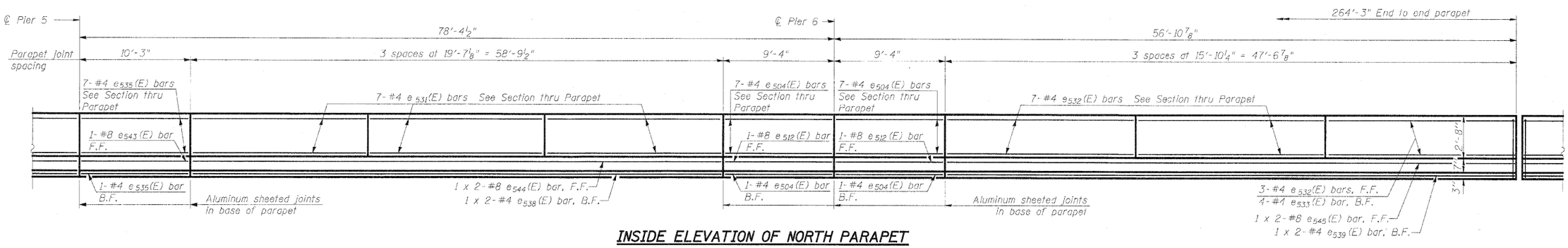

INSIDE ELEVATION OF NORTH PARAPET

MINIMUM BAR LAP

(Parapet)

#4 bar = 2'-0"
#5 bar = 5'-2"

Note:
See sheet 21 of 77 for parapet details.
See sheet 22 of 77 for Bill of Material.
Dimensions are measured along inside face of parapet.

DESIGNED	ASJ
CHECKED	SPK
DRAWN	ASJ
CHECKED	SPK

E.B. ROADWAY NORTH PARAPET
STRUCTURE NO. 081-0024 (W.B.)
STRUCTURE NO. 081-0025 (E.B.)

INFRASTRUCTURE ENGINEERING | INCORPORATED
33 West Monroe | Suite 1540 | Chicago, IL 60603
P 312.425.9560 | F 312.425.9564 | www.infrastructure-eng.com

SHEET NO. 19	F.A.I. RTE.	SECTION	COUNTY	TOTAL SHEETS	SHEET NO.
77 SHEETS	280	81-1(VB-1)R	ROCK ISLAND	503	355
			CONTRACT NO. 64815		
	FED. ROAD DIST. NO. _	ILLINOIS	FED. AID PROJECT		

STATE OF ILLINOIS
DEPARTMENT OF TRANSPORTATION

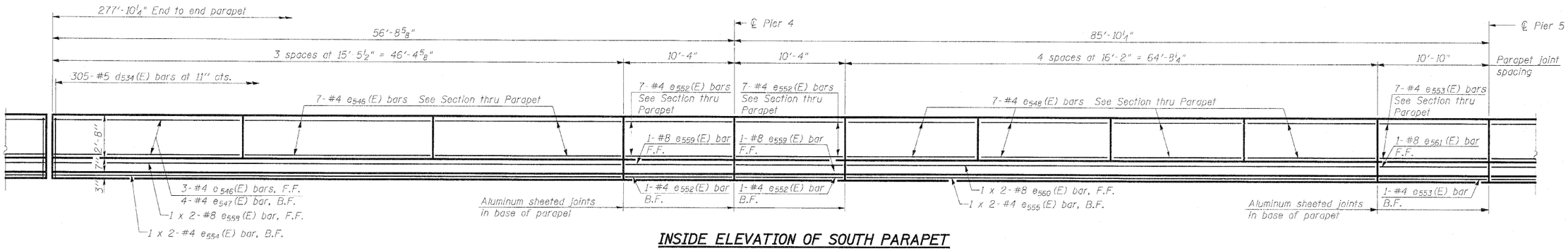

INSIDE ELEVATION OF SOUTH PARAPET

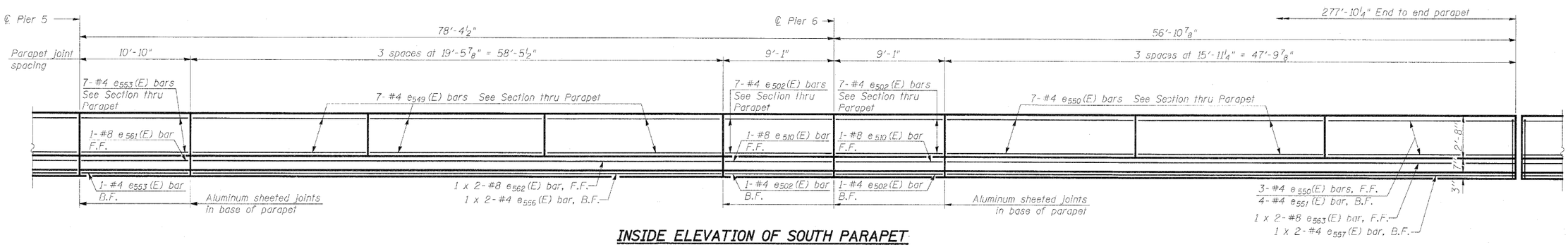

INSIDE ELEVATION OF SOUTH PARAPET

MINIMUM BAR LAP

(Parapet)

#4 bar = 2'-0"
#5 bar = 5'-2"

Note:
See sheet 21 of 77 for parapet details.
See sheet 22 of 77 for Bill of Material.
Dimensions are measured along inside face of parapet.

DESIGNED	ASJ
CHECKED	SPK
DRAWN	ASJ
CHECKED	SPK

INFRASTRUCTURE ENGINEERING INCORPORATED
33 West Monroe | Suite 1540 | Chicago, IL 60603
P 312.425.9560 | F 312.425.9564 | www.infrastructure-eng.com

E.B. ROADWAY SOUTH PARAPET
STRUCTURE NO. 081-0024 (W.B.)
STRUCTURE NO. 081-0025 (E.B.)

SHEET NO. 20	F.A.I. RTE.	SECTION	COUNTY	TOTAL SHEETS	SHEET NO.
77 SHEETS	280	81-1(VB-1)R	ROCK ISLAND	503	356
			CONTRACT NO. 64815		
	FED. ROAD DIST. NO. _	ILLINOIS	FED. AID PROJECT		

STATE OF ILLINOIS
DEPARTMENT OF TRANSPORTATION

Notes:
Drains shall be located clear of all diaphragms.
The exterior surfaces of the floor drains shall be painted with the finish coat as specified in the special provisions for Cleaning and Painting New Metal Structures. The exterior surfaces of the drains shall be cleaned according to the Society of Protective Coating's Spec. SSPC-SP1 prior to painting.
Fiberglass pipe shall conform to ASTM D 2996, with short-time rupture strength hoop tensile stress of 30,000 p.s.i. minimum.
Galvanize clamping device according to AASHTO M232. Cost of clamping device and inserts is included with Floor Drains.

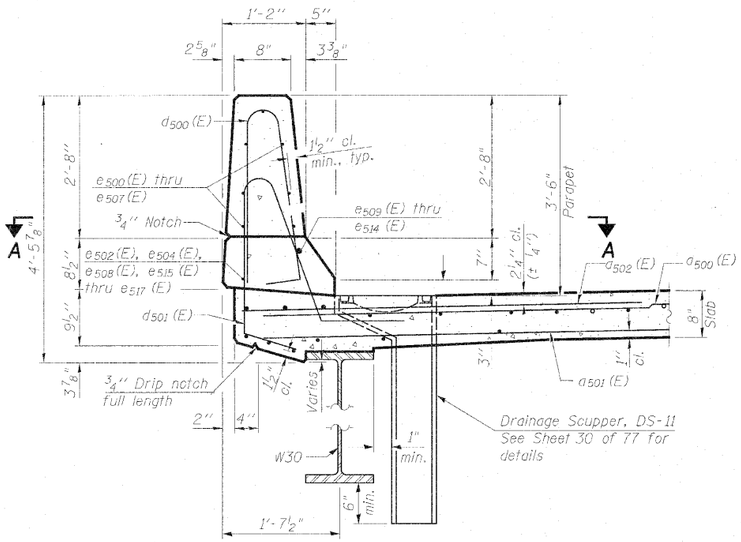

SECTION THRU W.B. ROADWAY NORTH PARAPET

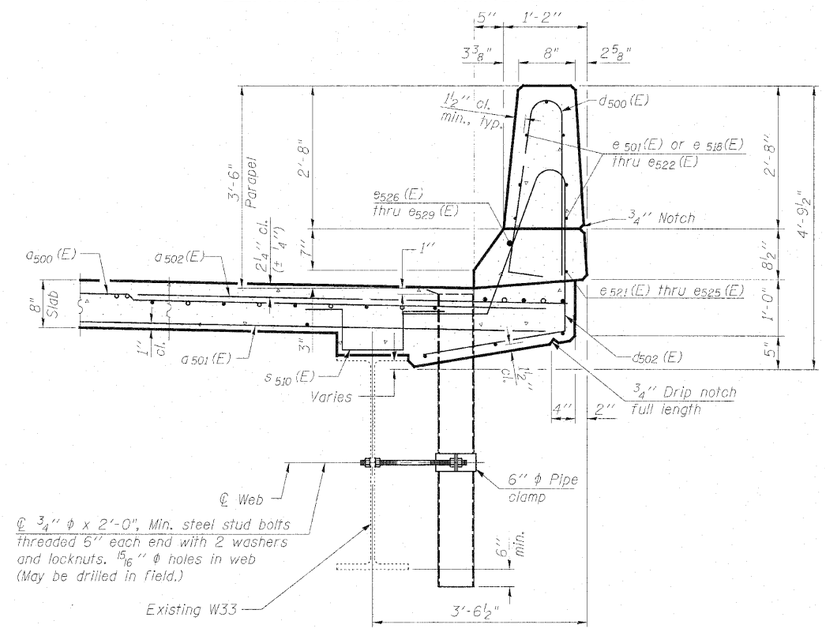

SECTION THRU W.B. ROADWAY SOUTH PARAPET

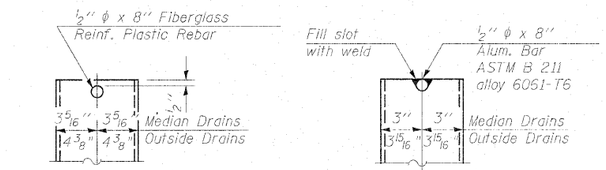

FIBERGLASS PIPE

ALUMINUM TUBE

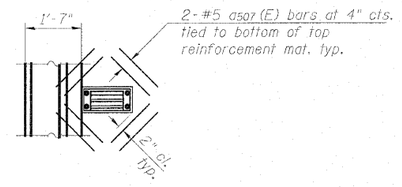

SECTION A-A

Note:
Cut longitudinal reinforcement to clear drainage scuppers.

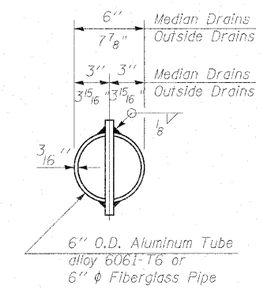

TOP PLAN
(Showing Aluminum Tube)

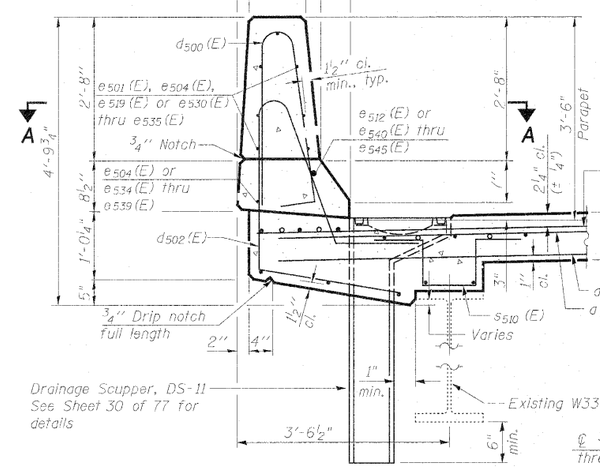

SECTION THRU E.B. ROADWAY NORTH PARAPET

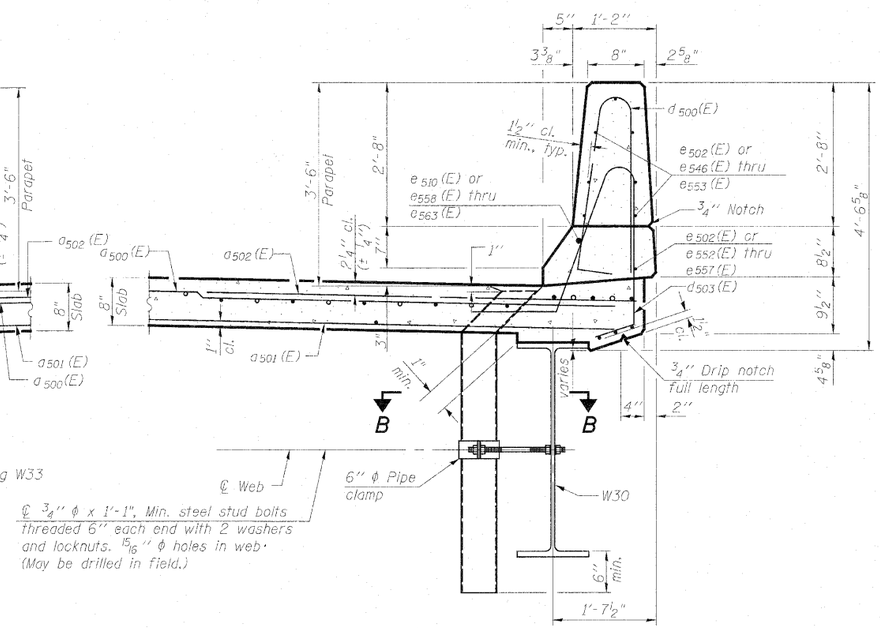

SECTION THRU E.B. ROADWAY SOUTH PARAPET

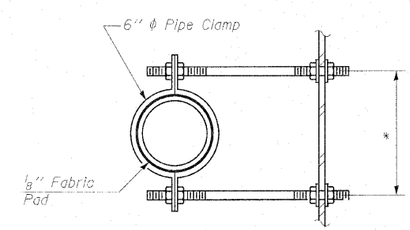

SECTION B-B

* Dimension as required by Pipe Clamp

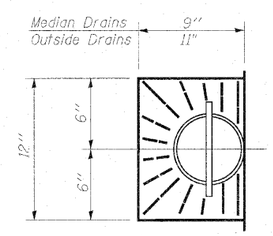

TOP PLAN

SUPERSTRUCTURE DETAILS
STRUCTURE NO. 081-0024 (W.B.)
STRUCTURE NO. 081-0025 (E.B.)

DESIGNED	ASJ
CHECKED	SPK
DRAWN	ASJ
CHECKED	SPK

INFRASTRUCTURE ENGINEERING | INCORPORATED
33 West Monroe | Suite 1540 | Chicago, IL 60603
P 312.425.9560 | F 312.425.9564 | www.infrastructure-eng.com

SHEET NO. 21	F.A.I. RTE.	SECTION	COUNTY	TOTAL SHEETS	SHEET NO.
77 SHEETS	280	81-1(VB-1)R	ROCK ISLAND	503	357
			CONTRACT NO. 64815		
	FED. ROAD DIST. NO. _	ILLINOIS	FED. AID PROJECT		

STATE OF ILLINOIS
DEPARTMENT OF TRANSPORTATION

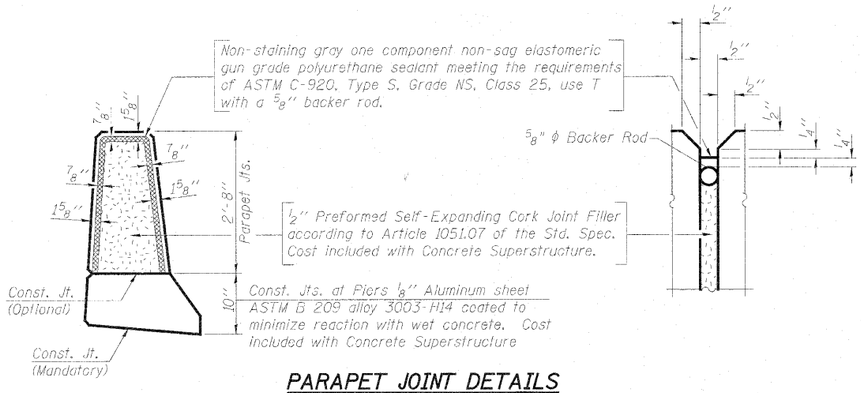

PARAPET JOINT DETAILS

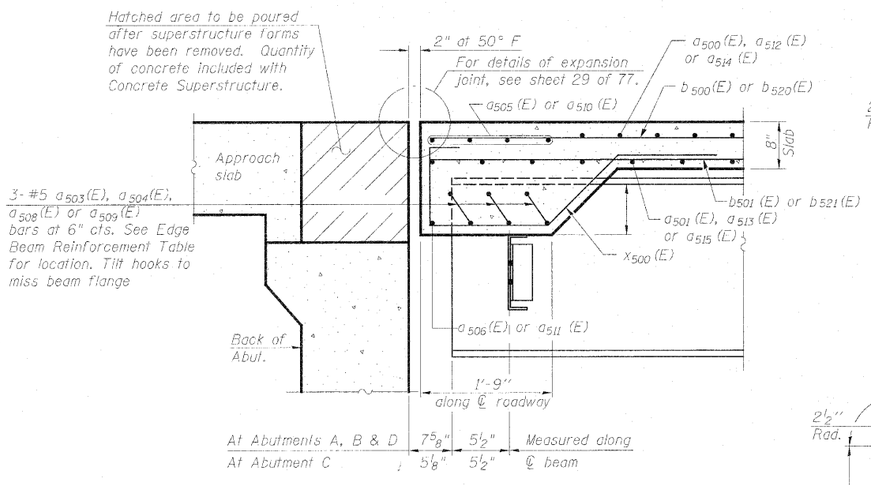

SECTION A-A

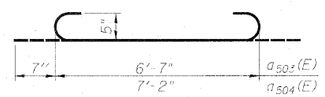

BARS a503 (E) & a504 (E)

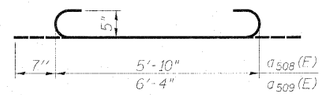

BARS a508 (E) & a509 (E)

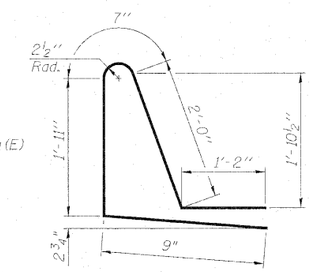

BAR d501 (E)

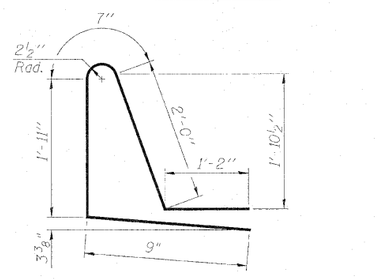

BAR d503 (E)

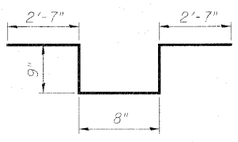

BAR s510 (E)

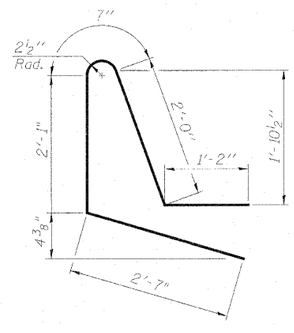

BAR d502 (E)

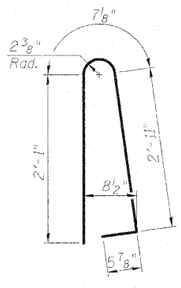

BAR d500 (E)

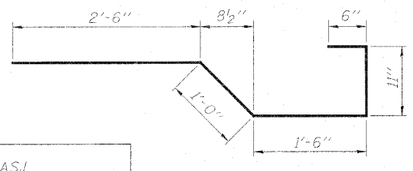

BAR x500 (E)

EDGE BEAM REINFORCEMENT TABLE

Location	Beams 1A-1 Beams 12-13	Beams 1-6 Beams 7-12
Abutment A	#5 a503(E) bars	#5 a504(E) bars
Abutment B	#5 a503(E) bars	#5 a504(E) bars
Abutment C	#5 a508(E) bars	#5 a509(E) bars
Abutment D	#5 a503(E) bars	#5 a504(E) bars

W.B. ROADWAY SUPERSTRUCTURE BILL OF MATERIAL

Bar	No.	Size	Length	Shape
a500 (E)	377	#5	42'-6"	
a501 (E)	321	#5	41'-10"	
a502 (E)	378	#6	6'-6"	
a503 (E)	6	#5	7'-9"	
a504 (E)	30	#5	8'-4"	
a505 (E)	8	#5	49'-1"	
a506 (E)	2	#5	48'-4"	
a507 (E)	15	#5	1'-6"	
b500 (E)	414	#4	32'-6"	
b501 (E)	424	#4	36'-2"	
b502 (E)	86	#4	40'-10"	
b503 (E)	43	#4	41'-4"	
d500 (E)	584	#5	6'-10"	
d501 (E)	292	#5	6'-5"	
d502 (E)	292	#5	8'-5"	
e500 (E)	17	#4	16'-8"	
e501 (E)	46	#4	17'-6"	
e502 (E)	32	#4	8'-9"	
e503 (E)	21	#4	17'-11"	
e504 (E)	16	#4	9'-0"	
e505 (E)	21	#4	18'-2"	
e506 (E)	17	#4	16'-5"	
e507 (E)	4	#4	15'-7"	
e508 (E)	2	#4	26'-10"	
e509 (E)	2	#8	28'-0"	
e510 (E)	4	#8	8'-9"	
e511 (E)	2	#8	29'-9"	
e512 (E)	2	#8	9'-0"	
e513 (E)	2	#8	30'-2"	
e514 (E)	2	#8	27'-7"	
e515 (E)	2	#4	28'-3"	
e516 (E)	2	#4	28'-7"	
e517 (E)	2	#4	25'-7"	
e518 (E)	34	#4	16'-7"	
e519 (E)	4	#4	15'-9"	
e520 (E)	4	#4	17'-5"	
e521 (E)	32	#4	9'-2"	
e522 (E)	16	#4	9'-3"	
e523 (E)	2	#4	25'-9"	
e524 (E)	4	#4	27'-10"	
e525 (E)	2	#4	26'-7"	
e526 (E)	4	#8	27'-9"	
e527 (E)	4	#8	9'-2"	
e528 (E)	2	#8	9'-3"	
e529 (E)	4	#8	29'-5"	
s510 (E)	1602	#4	7'-4"	
x500 (E)	82	#5	6'-5"	
Concrete Superstructure			Cu. Yds.	414.0
Bridge Deck Grooving			Sq. Yd.	1,124
Protective Coat			Sq. Yd.	1,456
Reinforcement Bars, Epoxy Coated			Pound	79,400

E.B. ROADWAY SUPERSTRUCTURE BILL OF MATERIAL

Bar	No.	Size	Length	Shape
a500 (E)	359	#5	42'-6"	
a501 (E)	305	#5	41'-10"	
a502 (E)	384	#6	6'-6"	
a503 (E)	3	#5	7'-9"	
a504 (E)	15	#5	8'-4"	
a505 (E)	4	#5	49'-1"	
a506 (E)	1	#5	48'-4"	
a507 (E)	16	#5	1'-6"	
a508 (E)	3	#5	7'-0"	
a509 (E)	15	#5	7'-6"	
a510 (E)	4	#5	43'-9"	
a511 (E)	1	#5	43'-0"	
a512 (E)	7	#5	40'-7"	
a513 (E)	6	#5	39'-9"	
a514 (E)	17	#5	42'-6"	
a515 (E)	15	#5	42'-1"	
b520 (E)	414	#5	33'-10"	
b521 (E)	424	#5	37'-8"	
b522 (E)	43	#6	43'-4"	
b523 (E)	43	#6	46'-6"	
b524 (E)	43	#6	40'-6"	
d500 (E)	594	#5	6'-10"	
d502 (E)	289	#5	8'-5"	
d503 (E)	305	#5	6'-5"	
e501 (E)	21	#4	17'-6"	
e502 (E)	16	#4	8'-9"	
e504 (E)	16	#4	9'-0"	
e510 (E)	2	#8	8'-9"	
e512 (E)	2	#8	9'-0"	
e519 (E)	17	#4	15'-9"	
e530 (E)	4	#4	16'-1"	
e531 (E)	21	#4	19'-3"	
e532 (E)	17	#4	15'-6"	
e533 (E)	4	#4	14'-8"	
e534 (E)	16	#4	8'-3"	
e535 (E)	16	#4	9'-11"	
e536 (E)	2	#4	25'-1"	
e537 (E)	2	#4	27'-7"	
e538 (E)	2	#4	30'-4"	
e539 (E)	2	#4	24'-3"	
e540 (E)	2	#8	26'-6"	
e541 (E)	2	#8	8'-3"	
e542 (E)	2	#8	29'-2"	
e543 (E)	2	#8	9'-11"	
e544 (E)	2	#8	31'-10"	
e545 (E)	2	#8	26'-3"	
e546 (E)	17	#4	15'-2"	
e547 (E)	4	#4	14'-8"	
e548 (E)	28	#4	15'-8"	
e549 (E)	21	#4	19'-2"	
e550 (E)	17	#4	15'-8"	
e551 (E)	4	#4	16'-6"	
e552 (E)	16	#4	10'-0"	
e553 (E)	16	#4	10'-6"	
e554 (E)	2	#4	23'-11"	
e555 (E)	2	#4	33'-3"	

Bar	No.	Size	Length	Shape
e556 (E)	2	#4	30'-1"	
e557 (E)	2	#4	25'-2"	
e558 (E)	2	#8	25'-8"	
e559 (E)	2	#8	10'-0"	
e560 (E)	2	#8	34'-10"	
e561 (E)	2	#8	10'-6"	
e562 (E)	2	#8	31'-8"	
e563 (E)	2	#8	26'-4"	
s510 (E)	1628	#5	7'-4"	
x500 (E)	82	#5	6'-5"	
Concrete Superstructure			Cu. Yds.	421.0
Bridge Deck Grooving			Sq. Yd.	1,144
Protective Coat			Sq. Yd.	1,482
Reinforcement Bars, Epoxy Coated			Pound	101,610

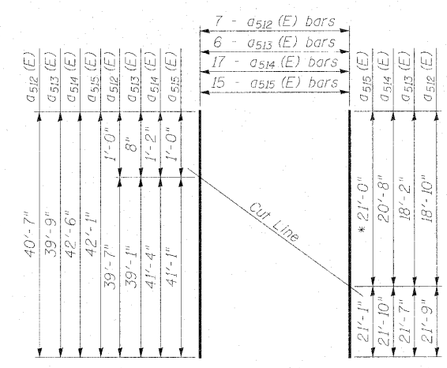

FIELD CUTTING DIAGRAM

Order bars full length. Cut to fit as shown and place at one end of the dimension line shown on the plans. Use remainder of bars at opposite end of the dimension line.
*Indicates bar length to be discarded when an odd number of bars are required.

DESIGNED	ASJ
CHECKED	SPK
DRAWN	ASJ
CHECKED	SPK

SUPERSTRUCTURE DETAILS
STRUCTURE NO. 081-0024 (W.B.)
STRUCTURE NO. 081-0025 (E.B.)

INFRASTRUCTURE ENGINEERING | INCORPORATED
33 West Monroe | Suite 1540 | Chicago, IL 60603
P 312.425.9560 | F 312.425.9564 | www.infrastructure-eng.com

SHEET NO. 22 / 77 SHEETS	F.A.I. RTE.	SECTION	COUNTY	TOTAL SHEETS	SHEET NO.
	280	81-1(VB-1)R	ROCK ISLAND	503	358
			CONTRACT NO. 64815		
	FED. ROAD DIST. NO. _	ILLINOIS	FED. AID PROJECT		

STATE OF ILLINOIS
DEPARTMENT OF TRANSPORTATION

Notes:
See sheet 24 of 77 for Sections A-A & B-B.
a_{540} (E), a_{541} (E), a_{542} (E) and a_{543} (E) bar spacings measured along ℄ Roadway.

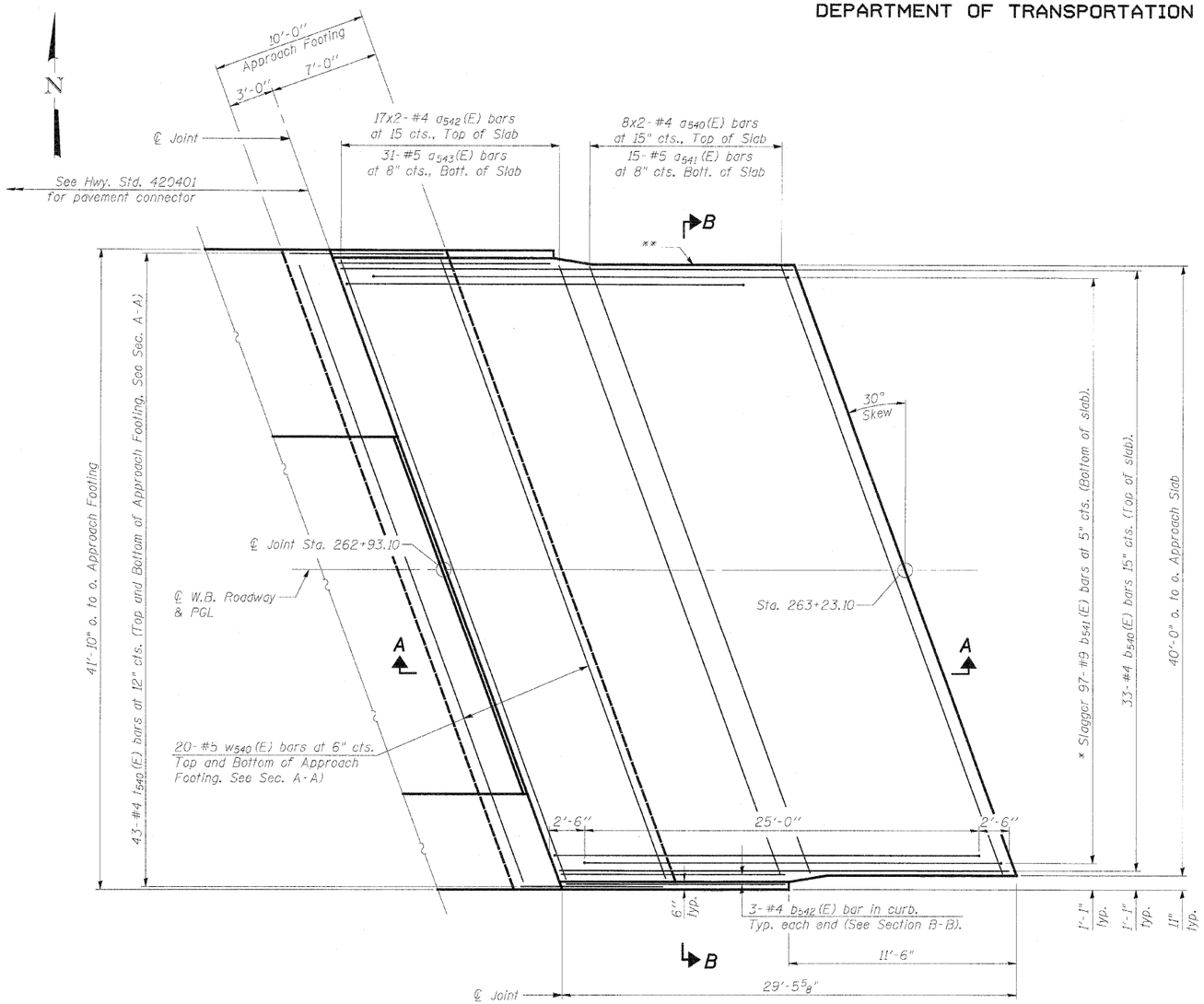

PLAN

* Tilt #9 b_{541}(E) bars as required to maintain clearance.

** Closed cell joint filler according to Article 1051.08 of the Standard Specifications; full depth of slab, full length of parapet. Typ. each parapet.

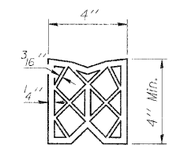

PREFORMED JOINT SEAL

*** Cost included with Concrete Superstructure.

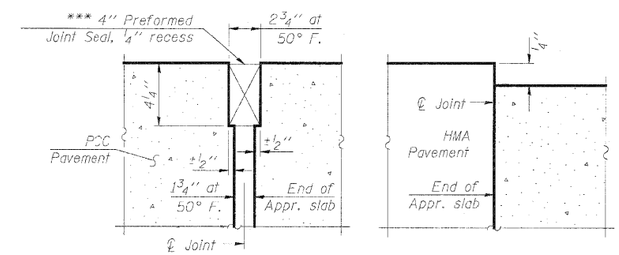

RIGID PAVEMENT

FLEXIBLE PAVEMENT

DETAIL C

(Sheet 1 of 2)

W.B. ROADWAY WEST APPROACH SLAB DETAILS
STRUCTURE NO. 081-0024 (W.B.)
STRUCTURE NO. 081-0025 (E.B.)

DESIGNED	ASJ
CHECKED	SPK
DRAWN	ASJ
CHECKED	SPK

INFRASTRUCTURE ENGINEERING | INCORPORATED
33 West Monroe | Suite 1540 | Chicago, IL 60603
P 312.425.9560 | F 312.425.9564 | www.infrastructure-eng.com

SHEET NO. 23	F.A.I. RTE.	SECTION	COUNTY	TOTAL SHEETS	SHEET NO.
77 SHEETS	280	81-1(VB-1)R	ROCK ISLAND	503	359
			CONTRACT NO. 64815		
	FED. ROAD DIST. NO. _	ILLINOIS	FED. AID PROJECT		

STATE OF ILLINOIS
DEPARTMENT OF TRANSPORTATION

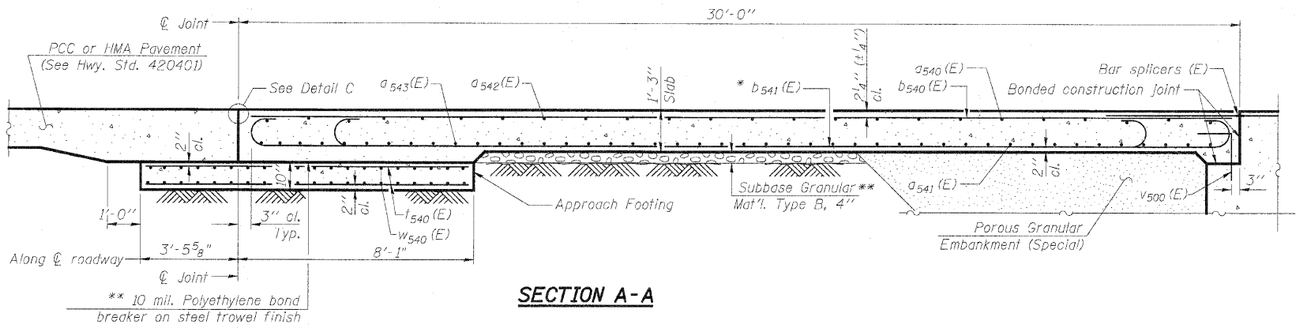

SECTION A-A

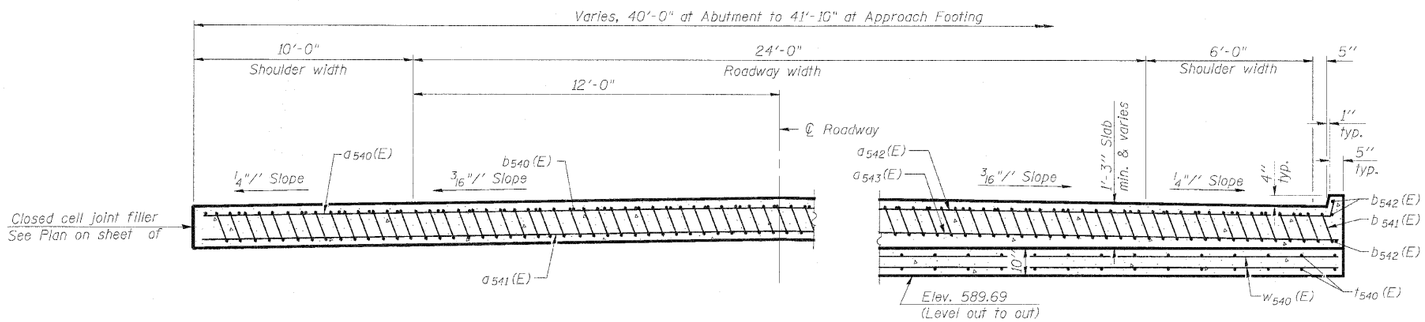

AT APPROACH FOOTING

NEAR ABUTMENT

SECTION B-B

(See Plan for dimensions not shown)

Notes:
- See sheet 23 of 77 for Detail C.
- Approach slab shall be paid for as Concrete Superstructure.
- Approach footing concrete shall be paid for as Concrete Structures.
- Reinforcement shall be paid for as Reinforcement Bars, Epoxy Coated.
- For v_{500} (E) bar details, see sheet 43 of 77.
- The approach footing maximum applied service bearing pressure (Qmax) = 2.0 ksf.
- For bar splicer details, see sheet 71 of 77.
- Cost of excavation for approach footing included with Concrete Structures.
- For Porous Granular Embankment (Special) and drainage treatment details, see sheet 56 of 77.

* Tilt #9 b_{541} (E) bars as required to maintain clearance.

** Cost included with Concrete Superstructure.

ONE APPROACH
BILL OF MATERIAL

Bar	No.	Size	Length	Shape
a_{540} (E)	16	#4	24'-5"	
a_{541} (E)	15	#5	45'-10"	
a_{542} (E)	34	#4	25'-9"	
a_{543} (E)	31	#5	47'-11"	
b_{540} (E)	33	#4	29'-8"	
b_{541} (E)	97	#9	29'-9"	
b_{542} (E)	6	#4	18'-2"	
t_{540} (E)	86	#4	11'-3"	
w_{540} (E)	40	#5	47'-11"	
Concrete Superstructure			Cu. Yd.	61.2
Concrete Structures			Cu. Yd.	12.9
Bridge Deck Grooving			Sq. Yd.	127
Protective Coat			Cu. Yd.	150
Reinforcement Bars, Epoxy Coated			Pound	16,300

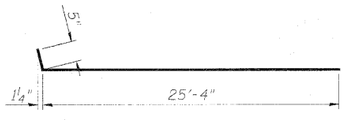

BAR a_{542} (E)

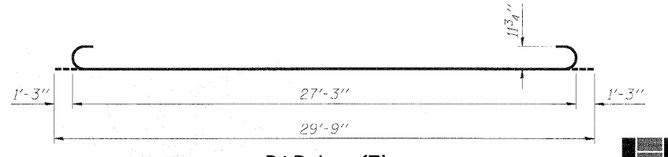

BAR b_{541} (E)

DESIGNED	ASJ
CHECKED	SPK
DRAWN	ASJ
CHECKED	SPK

INFRASTRUCTURE ENGINEERING | INCORPORATED
33 West Monroe | Suite 1540 | Chicago, IL 60603
P 312.425.9560 | F 312.425.9564 | www.infrastructure-eng.com

(Sheet 2 of 2)
W.B. ROADWAY WEST APPROACH SLAB DETAILS
STRUCTURE NO. 081-0024 (W.B.)
STRUCTURE NO. 081-0025 (E.B.)

SHEET NO. 24	F.A.I. RTE.	SECTION	COUNTY	TOTAL SHEETS	SHEET NO.
77 SHEETS	280	81-1(VB-1)R	ROCK ISLAND	503	360
			CONTRACT NO. 64815		
	FED. ROAD DIST. NO. _	ILLINOIS	FED. AID PROJECT		

STATE OF ILLINOIS
DEPARTMENT OF TRANSPORTATION

Notes:
See sheet 26 of 77 for Sections A-A & B-B.
a_{545} (E), a_{546} (E), a_{547} (E) and a_{548} (E) bar spacings measured along ℄ Roadway.

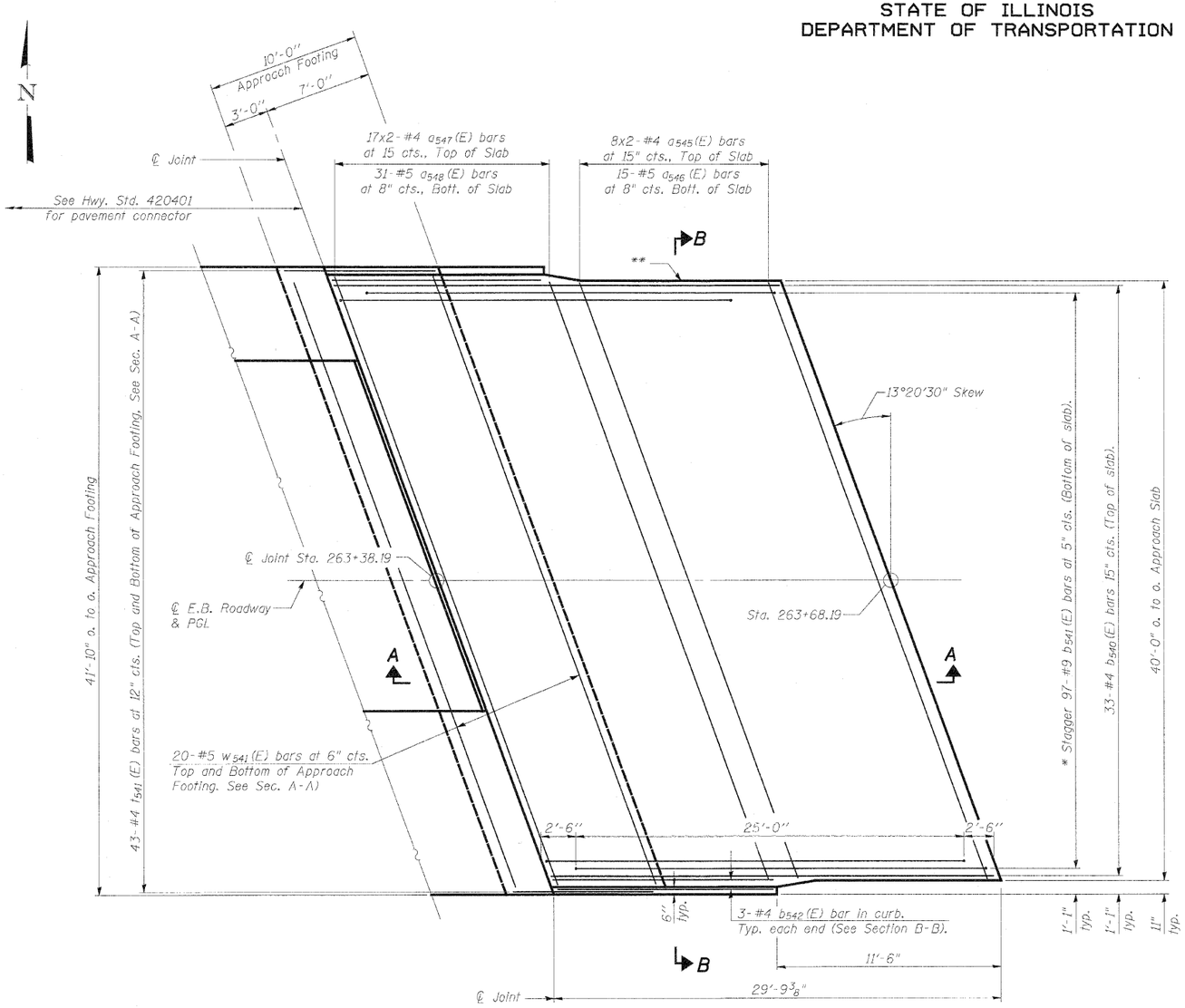

PLAN

* Tilt #9 b_{541}(E) bars as required to maintain clearance.

** Closed cell joint filler according to Article 1051.08 of the Standard Specifications; full depth of slab, full length of parapet. Typ. each parapet.

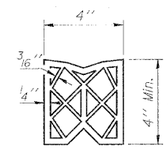

PREFORMED JOINT SEAL

*** Cost included with Concrete Superstructure.

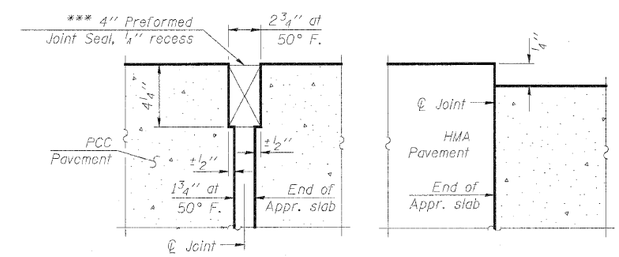

RIGID PAVEMENT

FLEXIBLE PAVEMENT

DETAIL C

(Sheet 1 of 2)

E.B. ROADWAY WEST APPROACH SLAB DETAILS
STRUCTURE NO. 081-0024 (W.B.)
STRUCTURE NO. 081-0025 (E.B.)

DESIGNED	ASJ
CHECKED	SPK
DRAWN	ASJ
CHECKED	SPK

INFRASTRUCTURE ENGINEERING | INCORPORATED
33 West Monroe | Suite 1540 | Chicago, IL 60603
P 312.425.9560 | F 312.425.9564 | www.infrastructure-eng.com

SHEET NO. 25	F.A.I. RTE.	SECTION	COUNTY	TOTAL SHEETS	SHEET NO.
77 SHEETS	280	81-1(VB-1)R	ROCK ISLAND	503	361
			CONTRACT NO. 64815		
	FED. ROAD DIST. NO. _	ILLINOIS	FED. AID PROJECT		

STATE OF ILLINOIS
DEPARTMENT OF TRANSPORTATION

Notes:
See sheet 25 of 77 for Detail C.
Approach slab shall be paid for as Concrete Superstructure.
Approach footing concrete shall be paid for as Concrete Structures.
Reinforcement shall be paid for as Reinforcement Bars, Epoxy Coated.
For v_{500} (E) bar details, see sheet 51 of 77.
The approach footing maximum applied service bearing pressure (Qmax) = 2.0 ksf.
For bar splicer details, see sheet 71 of 77.
Cost of excavation for approach footing included with Concrete Structures.
For Porous Granular Embankment (Special) and drainage treatment details, see sheet 56 of 77.

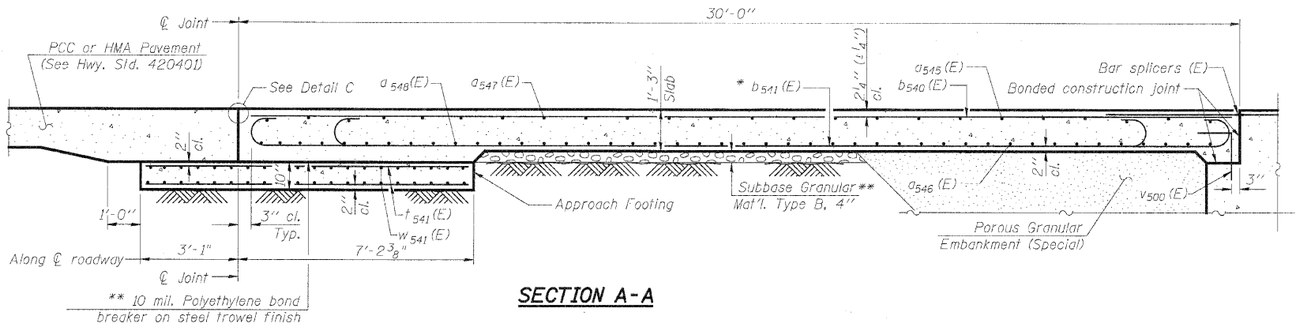

SECTION A-A

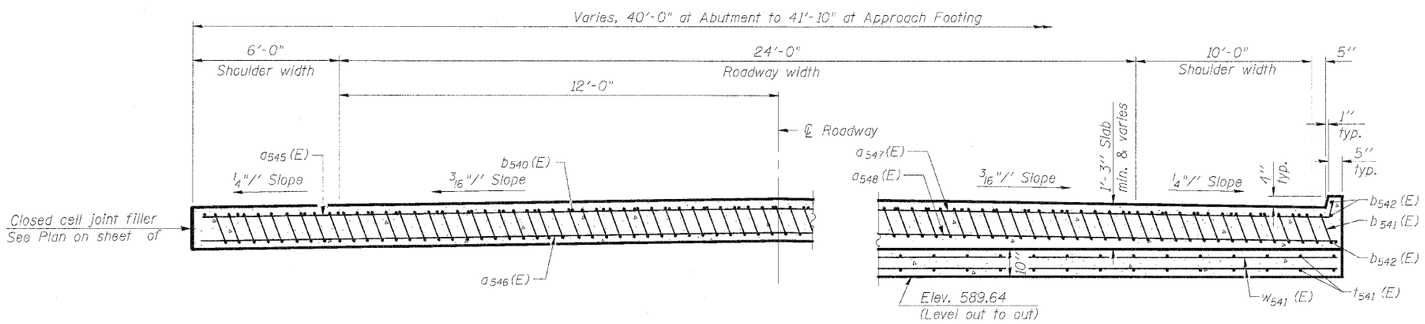

AT APPROACH FOOTING

NEAR ABUTMENT

SECTION B-B
(See Plan for dimensions not shown)

* Tilt #9 b_{541} (E) bars as required to maintain clearance.

** Cost included with Concrete Superstructure.

ONE APPROACH
BILL OF MATERIAL

Bar	No.	Size	Length	Shape
a_{545} (E)	16	#4	21'-11"	
a_{546} (E)	15	#5	40'-10"	
a_{547} (E)	34	#4	23'-2"	
a_{548} (E)	31	#5	42'-8"	
b_{540} (E)	33	#4	29'-8"	
b_{541} (E)	97	#9	29'-9"	
b_{542} (E)	6	#4	18'-2"	
t_{541} (E)	86	#4	10'-0"	
w_{541} (E)	40	#5	42'-8"	
Concrete Superstructure			Cu. Yd.	61.2
Concrete Structures			Cu. Yd.	12.9
Bridge Deck Grooving			Sq. Yd.	127
Protective Coat			Cu. Yd.	150
Reinforcement Bars, Epoxy Coated			Pound	15,670

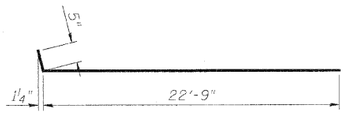

BAR a_{547} (E)

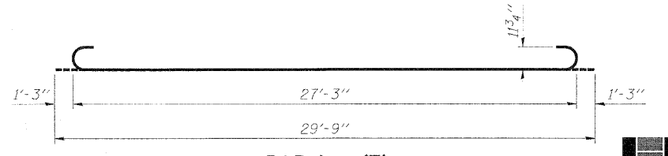

BAR b_{541} (E)

(Sheet 2 of 2)
E.B. ROADWAY WEST APPROACH SLAB DETAILS
STRUCTURE NO. 081-0024 (W.B.)
STRUCTURE NO. 081-0025 (E.B.)

DESIGNED	ASJ
CHECKED	SPK
DRAWN	ASJ
CHECKED	SPK

INFRASTRUCTURE ENGINEERING | INCORPORATED
33 West Monroe | Suite 1540 | Chicago, IL 60603
P 312.425.9560 | F 312.425.9564 | www.infrastructure-eng.com

SHEET NO. 26	F.A.I. RTE.	SECTION	COUNTY	TOTAL SHEETS	SHEET NO.
77 SHEETS	280	81-1(VB-1)R	ROCK ISLAND	503	362
			CONTRACT NO. 64815		
	FED. ROAD DIST. NO. _	ILLINOIS	FED. AID PROJECT		

STATE OF ILLINOIS
DEPARTMENT OF TRANSPORTATION

Notes:
See sheet 28 of 77 for Sections A-A & B-B.
a_{540} (E), a_{541} (E), a_{542} (E) and a_{543} (E) bar spacings measured along ℄ Roadway.
Order a_{542} (E), a_{543} (E), b_{540} (E), b_{541} (E) and b_{542} (E) bars full length. Cut in field to fit Type C and Type D Inlet Boxes.

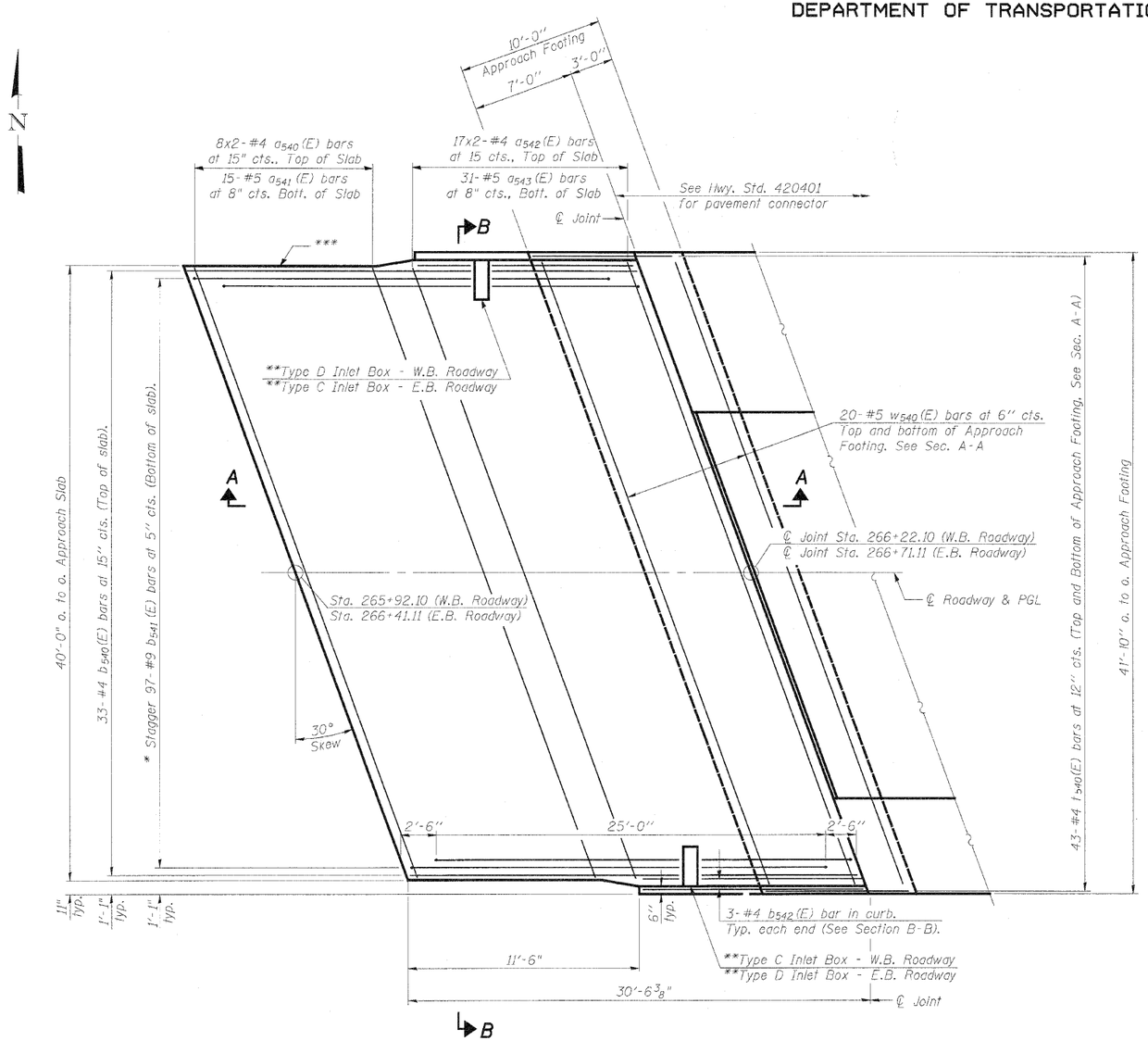

PLAN

* Tilt #9 b_{541} (E) bars as required to maintain clearance.

** See Highway Standard 609006. See Roadway Plans for details and quantities.

*** Closed cell joint filler according to Article 1051.08 of the Standard Specifications; full depth of slab, full length of parapet. Typ. each parapet.

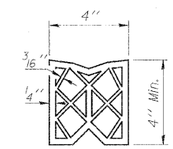

PREFORMED JOINT SEAL

*** Cost included with Concrete Superstructure.

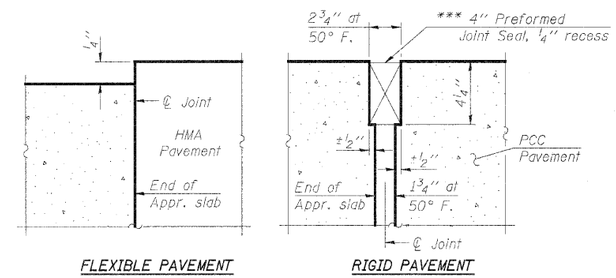

FLEXIBLE PAVEMENT

RIGID PAVEMENT

DETAIL C

(Sheet 1 of 2)

BRIDGE EAST APPROACH SLAB DETAILS
STRUCTURE NO. 081-0024 (W.B.)
STRUCTURE NO. 081-0025 (E.B.)

DESIGNED	ASJ
CHECKED	SPK
DRAWN	ASJ
CHECKED	SPK

INFRASTRUCTURE ENGINEERING | INCORPORATED
33 West Monroe | Suite 1540 | Chicago, IL 60603
P 312.425.9560 | F 312.425.9564 | www.infrastructure-eng.com

SHEET NO. 27	F.A.I. RTE.	SECTION	COUNTY	TOTAL SHEETS	SHEET NO.
77 SHEETS	280	81-1(VB-1)R	ROCK ISLAND	503	363
			CONTRACT NO. 64815		
	FED. ROAD DIST. NO. _	ILLINOIS	FED. AID PROJECT		

STATE OF ILLINOIS
DEPARTMENT OF TRANSPORTATION

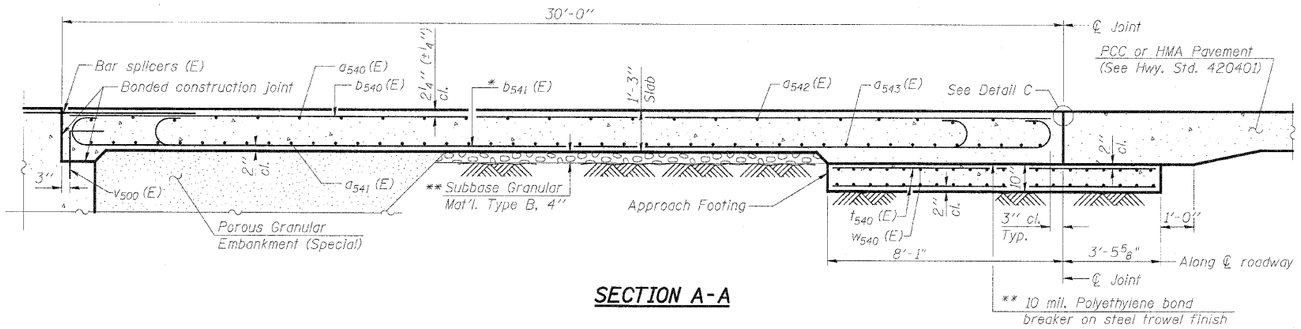

SECTION A-A

Notes:
See sheet 27 of 77 for Detail C.
Approach slab shall be paid for as Concrete Superstructure.
Approach footing concrete shall be paid for as Concrete Structures.
Reinforcement shall be paid for as Reinforcement Bars, Epoxy Coated.
For v_{500} (E) bar details, see sheet 47 or 55 of 77.
The approach footing maximum applied service bearing pressure (Qmax) = 2.0 ksf.
For bar splicer details, see sheet 71 of 77.
Cost of excavation for approach footing included with Concrete Structures.
For Porous Granular Embankment (Special) and drainage treatment details, see sheet 56 of 77.

* Tilt #9 b_{541} (E) bars as required to maintain clearance.

** Cost included with Concrete Superstructure.

*** 10'-0" - W.B. Roadway
6'-0" - E.B. Roadway

**** 6'-0" - W.B. Roadway
10'-0" - E.B. Roadway

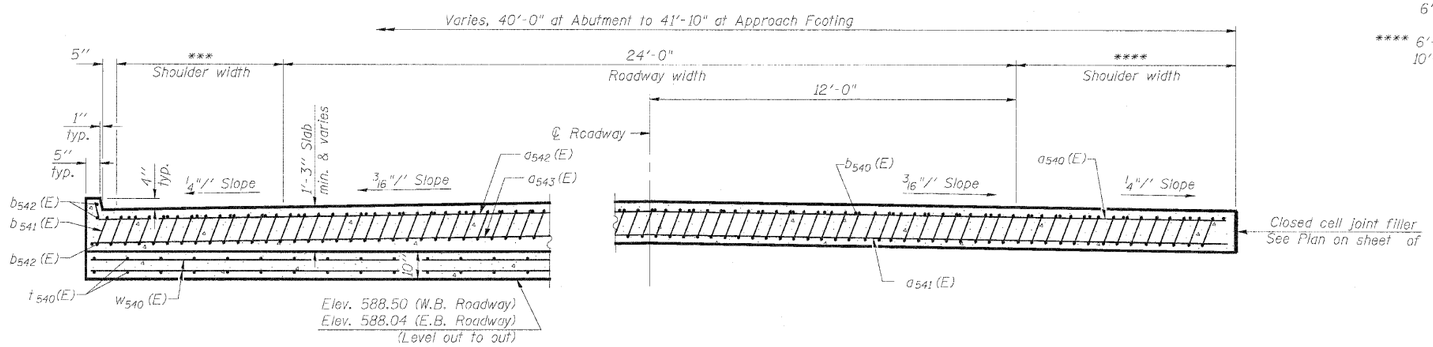

AT APPROACH FOOTING

NEAR ABUTMENT

SECTION B-B
(See Plan for dimensions not shown)

TWO APPROACHES
BILL OF MATERIAL

Bar	No.	Size	Length	Shape
a_{540} (E)	32	#4	24'-5"	
a_{541} (E)	30	#5	45'-10"	
a_{542} (E)	68	#4	25'-9"	
a_{543} (E)	62	#5	47'-11"	
b_{540} (E)	66	#4	29'-8"	
b_{541} (E)	194	#9	29'-9"	
b_{542} (E)	12	#4	18'-2"	
t_{540} (E)	172	#4	11'-3"	
w_{540} (E)	80	#5	47'-11"	
Concrete Superstructure			Cu. Yd.	122.4
Concrete Structures			Cu. Yd.	25.8
Bridge Deck Grooving			Sq. Yd.	254
Protective Coat			Cu. Yd.	300
Reinforcement Bars, Epoxy Coated			Pound	32,590

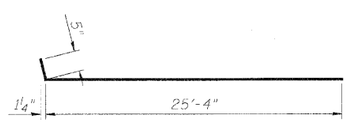

BAR a_{542} (E)

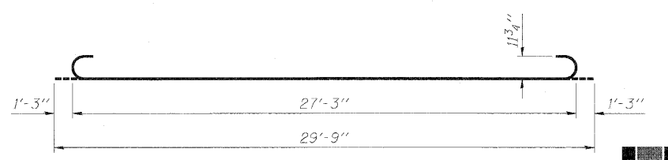

BAR b_{541} (E)

DESIGNED	ASJ
CHECKED	SPK
DRAWN	ASJ
CHECKED	SPK

INFRASTRUCTURE ENGINEERING | INCORPORATED
33 West Monroe | Suite 1540 | Chicago, IL 60603
P 312.425.9560 | F 312.425.9564 | www.infrastructure-eng.com

(Sheet 2 of 2)
BRIDGE EAST APPROACH SLAB DETAILS
STRUCTURE NO. 081-0024 (W.B.)
STRUCTURE NO. 081-0025 (E.B.)

SHEET NO. 28	F.A.I. RTE.	SECTION	COUNTY	TOTAL SHEETS	SHEET NO.
77 SHEETS	280	81-1(VB-1)R	ROCK ISLAND	503	364
			CONTRACT NO. 64815		
	FED. ROAD DIST. NO. _	ILLINOIS	FED. AID PROJECT		

STATE OF ILLINOIS
DEPARTMENT OF TRANSPORTATION

* Granular or solid flux filled headed studs conforming to Article 1006.32 of the Std. Specs., automatically end welded.

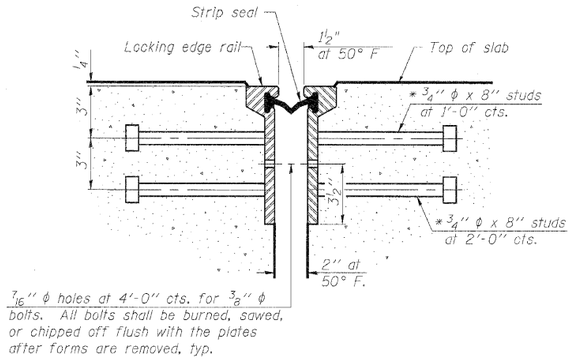

SECTION THRU ROLLED RAIL JOINT

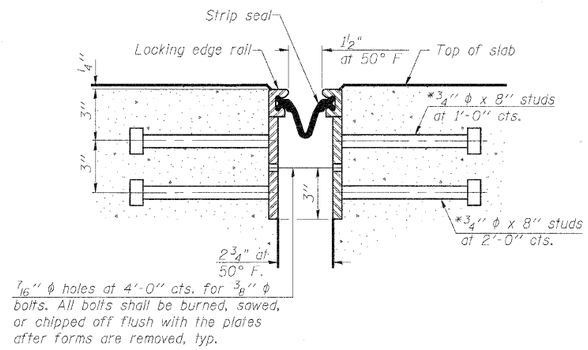

SECTION THRU WELDED RAIL JOINT

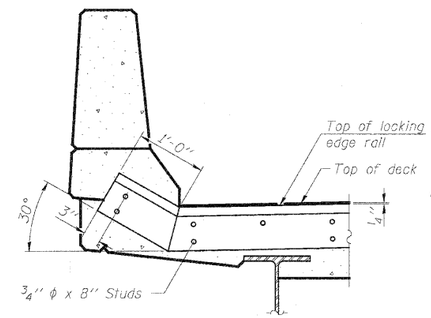

AT PARAPET

See Section A-A for end treatment of skews > 30°.

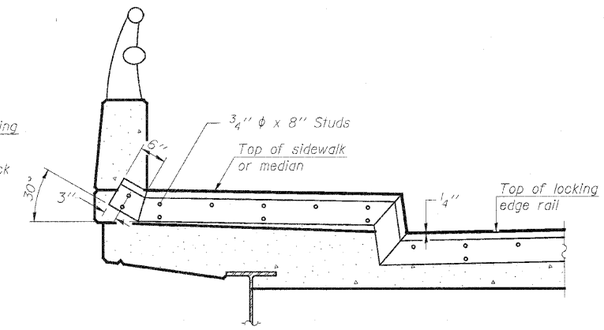

AT SIDEWALK OR MEDIAN

Shorter plates with a single row of studs at 12" cts. may be necessary on medians which are shallower than 9". See manufacturer's recommendation.

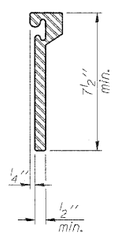

ROLLED EXTRUDED RAIL

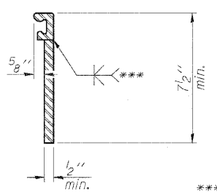

WELDED RAIL

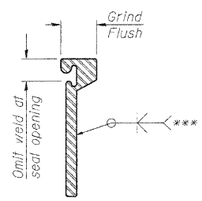

*** Back gouge not required if complete joint penetration is verified by mock-up.

LOCKING EDGE RAIL SPLICE

The inside of the locking edge rail groove shall be free of weld residue.

Rolled rail shown, welded rail similar.

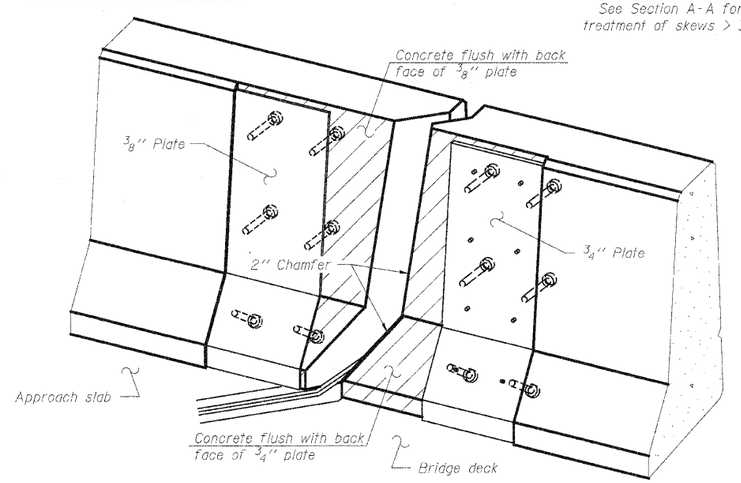

TRIMETRIC VIEW

(Showing back plates only)

TYPICAL END TREATMENTS

Notes:

The strip seal shall be made continuous and shall have a minimum thickness of ¼". The configuration of the strip seal shall match the configuration of the Locking Edge Rails. Open or "webbed" strip seal gland configurations are not permitted. The gland shall be sized for a maximum rated movement of 4 inches.

The Locking Edge Rails depicted are conceptual only, except for the minimum dimensions shown. The actual configuration of the Locking Edge Rails and matching strip seal may vary from manufacturer to manufacturer. Flanged edge rails will not be allowed. Locking Edge Rails may be spliced at slope discontinuities.

The manufacturer's recommended installation methods shall be followed.

The joint opening and deck dimensions detailed on the superstructure are based on a rolled rail expansion joint. If the Contractor elects to use the welded rail expansion joint, the opening and deck dimensions shall be modified according to the dimensions detailed on this sheet. Required modifications shall be made at no additional cost to the State.

All steel components shall be galvanized after fabrication according to Article 520.03 of the Standard Specifications.

Maximum space between rail segments at stage lines shall be 3/16", sealed with a suitable sealant.

LOCKING EDGE RAILS

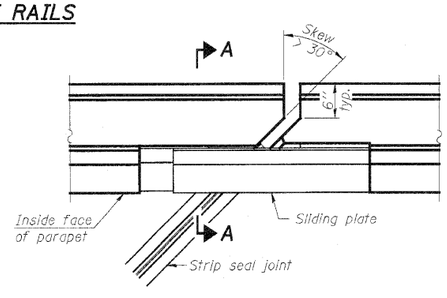

PLAN

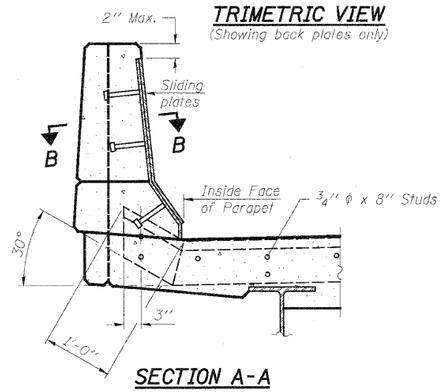

SECTION A-A

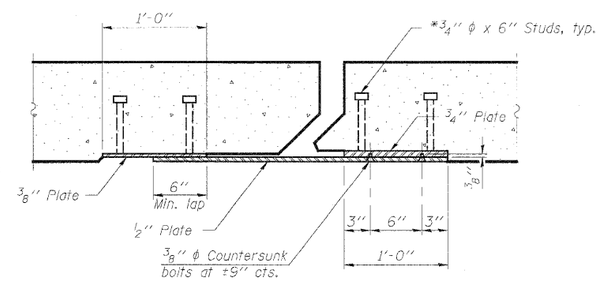

SECTION B-B

POINT BLOCK DETAILS

(for skews > 30°)

BILL OF MATERIAL

Item	Unit	Total
Preformed Joint Strip Seal	Foot	188

PREFORMED JOINT STRIP SEAL
STRUCTURE NO. 081-0024 (W.B.)
STRUCTURE NO. 081-0025 (E.B.)

DESIGNED	SPK
CHECKED	-
DRAWN	ASJ
CHECKED	SPK

EJ-SSJ 11-1-09

INFRASTRUCTURE ENGINEERING INCORPORATED
33 West Monroe | Suite 1540 | Chicago, IL 60603
P 312.425.9560 | F 312.425.9564 | www.infrastructure-eng.com

SHEET NO. 29	F.A.I. RTE.	SECTION	COUNTY	TOTAL SHEETS	SHEET NO.
77 SHEETS	280	81-1(VB-1)R	ROCK ISLAND	503	365
			CONTRACT NO. 64815		
	FED. ROAD DIST. NO. _	ILLINOIS	FED. AID PROJECT		

STATE OF ILLINOIS
DEPARTMENT OF TRANSPORTATION

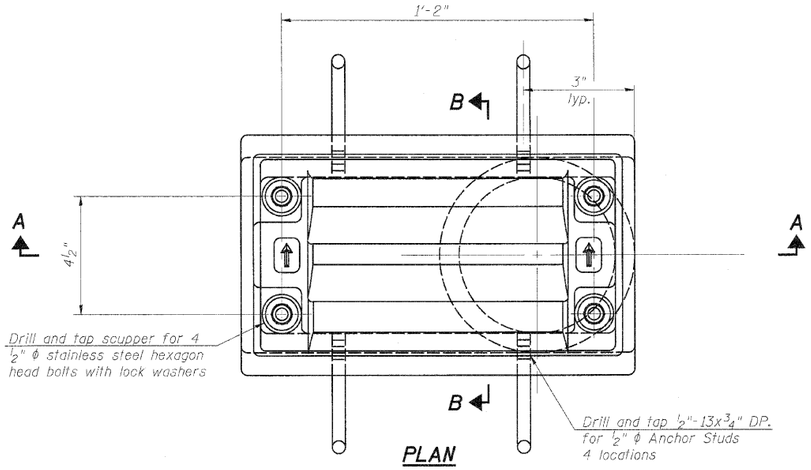

PLAN

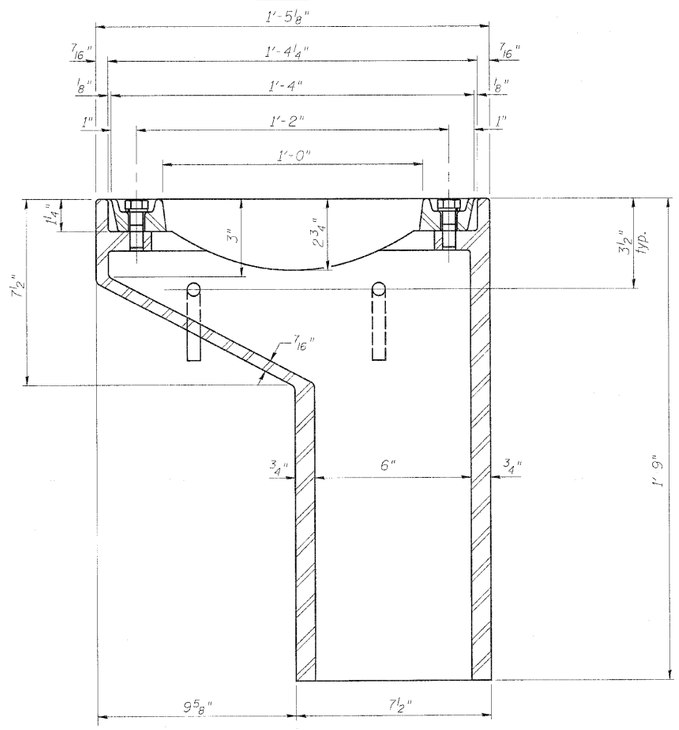

SECTION A-A

See sheet 21 of 77 for scupper location relative to parapet.

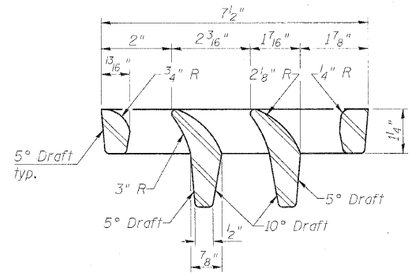

VANE GRATE DETAIL

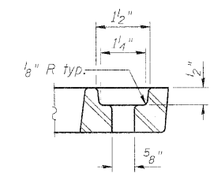

BOLT HOLE DETAIL

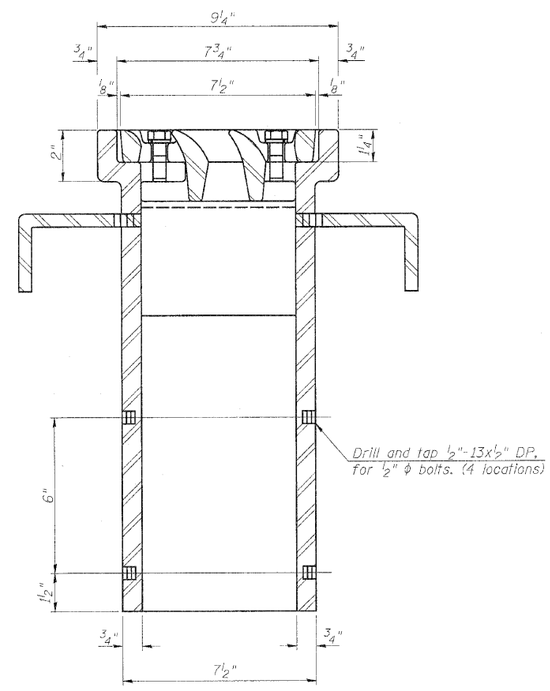

SECTION B-B

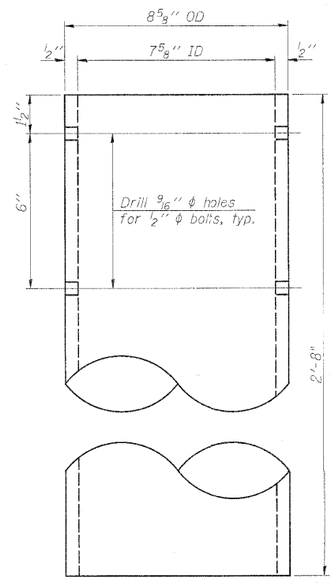

DOWNSPOUT

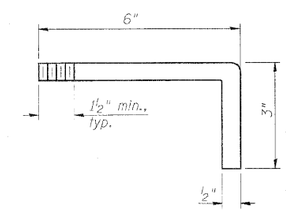

ANCHOR STUD DETAIL

Notes:

All cast iron parts shall be gray iron conforming to the requirements of AASHTO M 105, Class 35B.

Bolts, anchor studs, washers and nuts shall conform to the requirements of ASTM A 307 and shall be galvanized according to AASHTO M 232.

Downspouts located on the exterior side of a painted steel fascia beam shall be painted with the finish coat specified for the exterior side of the fascia beam.

As an alternate, bolts, anchor studs, washers and nuts may be stainless steel according to Article 1006.29(d) of the Standard Specifications.

Structural steel weldments of equal sections and of the same configuration may be substituted for the cast iron scupper frame. Fillet or full penetration welds shall be used for the weldments. Details shall be submitted to the Engineer for approval. Structural steel weldments shall not be substituted for the cast iron scupper grate. Structural steel frames and downspouts shall be galvanized according to AASHTO M111.

The Contractor shall take appropriate measures to assure that Protective Coat is not applied to the scupper.

Cost of the Grate, Frame, Downspout, Anchor Studs, Bolts, Washers and Nuts including complete installation of the scupper shall be paid for at the contract unit price each for Drainage Scupper, DS-11.

Alternate fiberglass downspout conforming to ASTM D 2996 with a short-time rupture strength hoop tensile stress of 30,000 psi min. may be used in lieu of the cast iron or steel equivalent.

BILL OF MATERIAL

ITEM	UNIT	QUANTITY
Drainage Scupper, DS-11	Each	4

DRAINAGE SCUPPER, DS-11
STRUCTURE NO. 081-0024 (W.B.)
STRUCTURE NO. 081-0025 (E.B.)

DESIGNED	
CHECKED	
DRAWN	ASJ
CHECKED	SPK

DS-11 11-1-09

INFRASTRUCTURE ENGINEERING | INCORPORATED
33 West Monroe | Suite 1540 | Chicago, IL 60603
P 312.425.9560 | F 312.425.9564 | www.infrastructure-eng.com

SHEET NO.30	F.A.I. RTE.	SECTION	COUNTY	TOTAL SHEETS	SHEET NO.
77 SHEETS	280	81-1(VB-1)R	ROCK ISLAND	503	366
			CONTRACT NO. 64815		
	FED. ROAD DIST. NO. _	ILLINOIS	FED. AID PROJECT		

STATE OF ILLINOIS
DEPARTMENT OF TRANSPORTATION

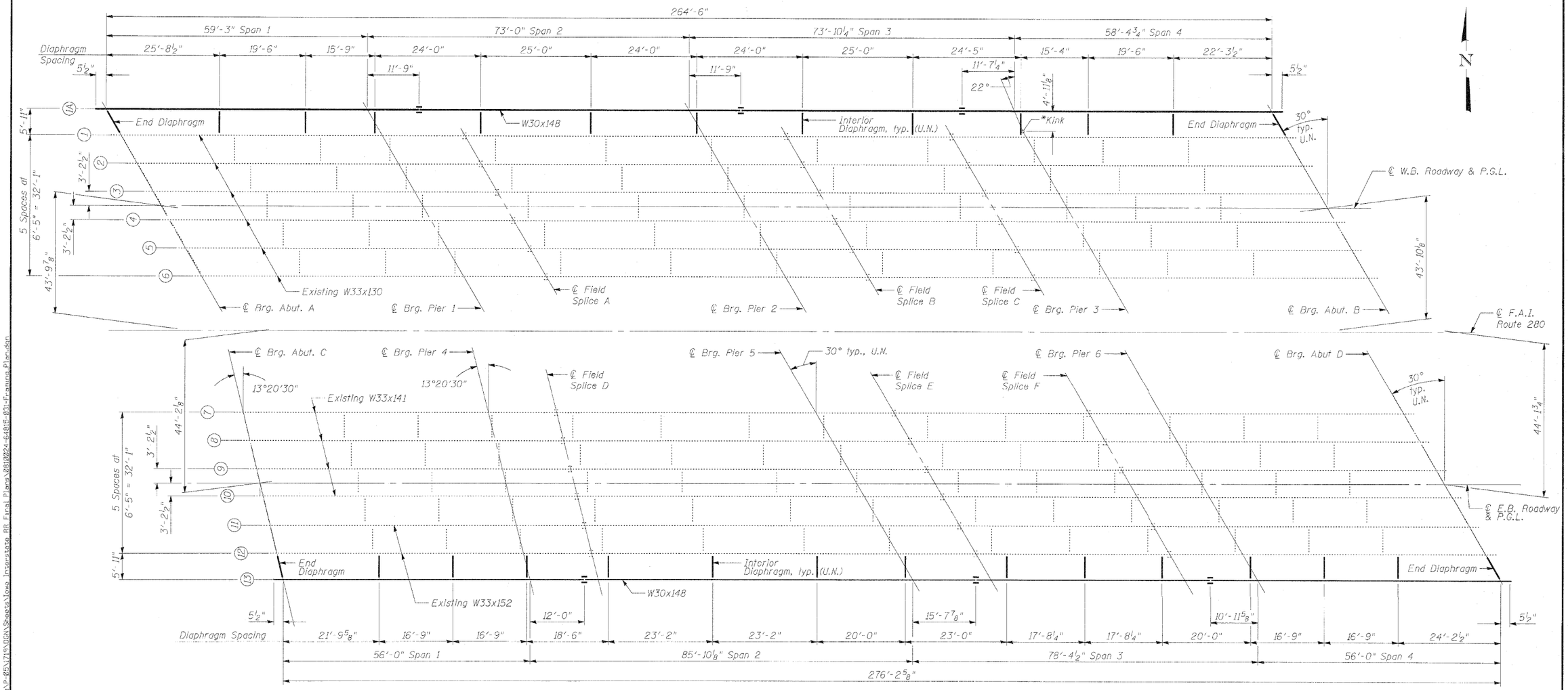

PLAN

* Kink indicates the location of the change in skew of Pier 3.

FRAMING PLAN
STRUCTURE NO. 081-0024 (W.B.)
STRUCTURE NO. 081-0025 (E.B.)

DESIGNED	SST
CHECKED	SPK
DRAWN	ASJ
CHECKED	SPK

Note:

All diaphragms shall be installed as steel is erected and secured with erection pins and bolts except as otherwise noted. Individual diaphragms at supports may be temporarily disconnected to install bearing anchor rods.

INFRASTRUCTURE ENGINEERING | INCORPORATED
33 West Monroe | Suite 1540 | Chicago, IL 60603
P 312.425.9560 | F 312.425.9564 | www.infrastructure-eng.com

SHEET NO. 31	F.A.I. RTE.	SECTION	COUNTY	TOTAL SHEETS	SHEET NO.
77 SHEETS	280	81-1(VB-1)R	ROCK ISLAND	503	367
			CONTRACT NO. 64815		
	FED. ROAD DIST. NO. _	ILLINOIS	FED. AID PROJECT		

STATE OF ILLINOIS
DEPARTMENT OF TRANSPORTATION

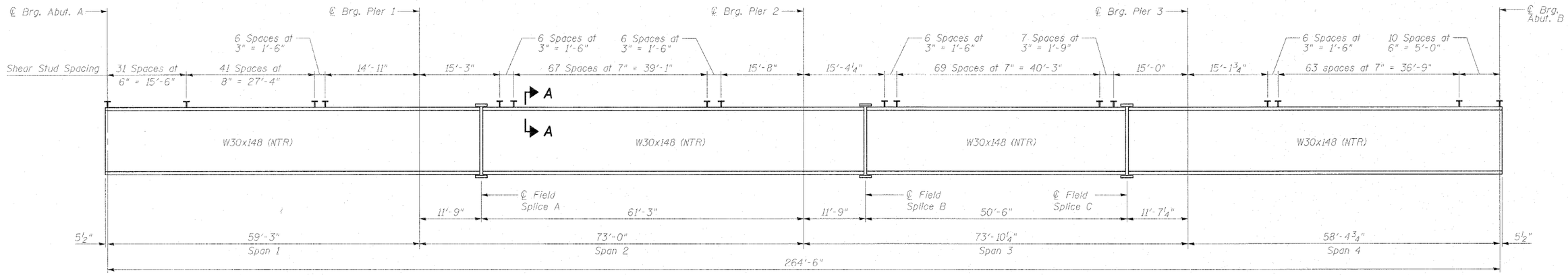

BEAM 1A ELEVATION

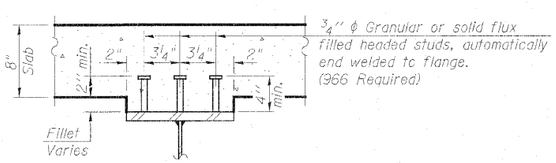

SECTION A-A

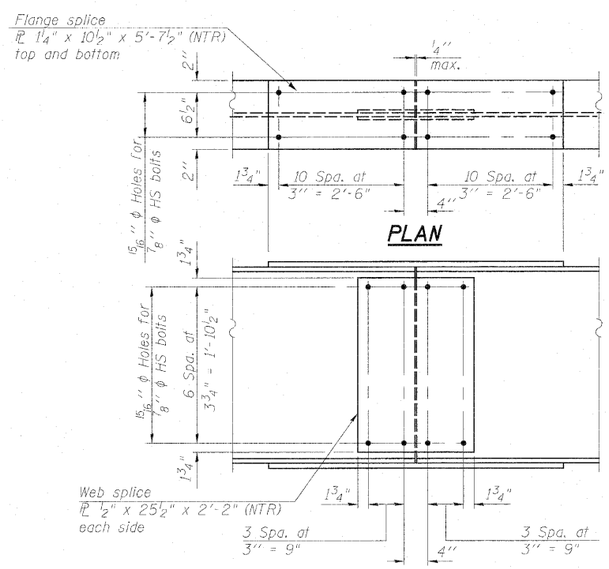

PLAN

ELEVATION

FIELD SPLICE DETAIL

(6 Required)

TOP OF BEAM ELEVATIONS

(For Fabrication Use Only)

	℄ Brg. Abut. A	℄ Brg. Pier 1	℄ Field Splice A	℄ Brg. Pier 2	℄ Field Splice B	℄ Field Splice C	℄ Brg. Pier 3	℄ Brg. Abut. B
Beam 1A	591.14	590.96	590.93	590.75	590.72	590.51	590.47	590.25

Notes:
All material on this sheet to be AASHTO M270 Grade 50 unless otherwise noted.
Load carrying components designated "NTR" shall conform to the Supplemental Requirement for Notch Toughness, Zone 2.

STEEL BEAM 1A DETAILS
STRUCTURE NO. 081-0024 (W.B.)
STRUCTURE NO. 081-0025 (E.B.)

DESIGNED	SST
CHECKED	SPK
DRAWN	ASJ
CHECKED	SPK

INFRASTRUCTURE ENGINEERING | INCORPORATED
33 West Monroe | Suite 1540 | Chicago, IL 60603
P 312.425.9560 | F 312.425.9564 | www.infrastructure-eng.com

SHEET NO.32	F.A.I. RTE.	SECTION	COUNTY	TOTAL SHEETS	SHEET NO.
77 SHEETS	280	81-1(VB-1)R	ROCK ISLAND	503	368
			CONTRACT NO. 64815		
	FED. ROAD DIST. NO. _	ILLINOIS	FED. AID PROJECT		

STATE OF ILLINOIS
DEPARTMENT OF TRANSPORTATION

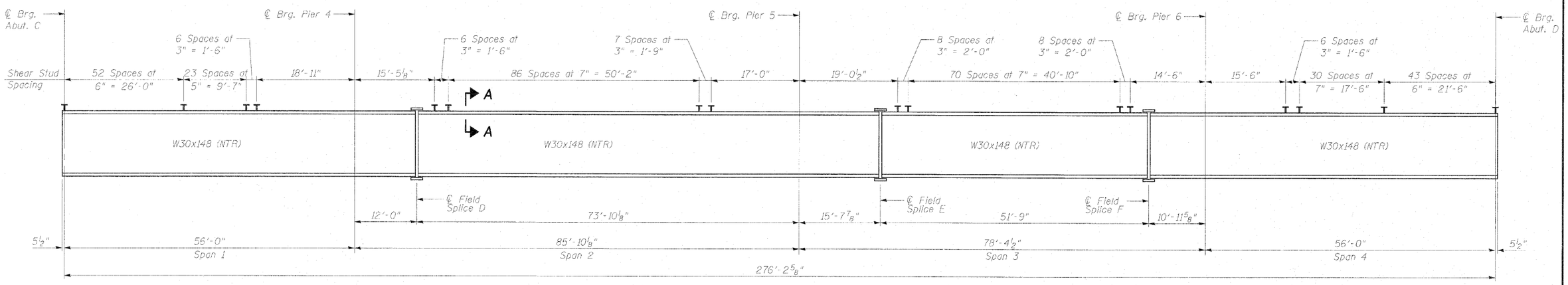

BEAM 13 ELEVATION

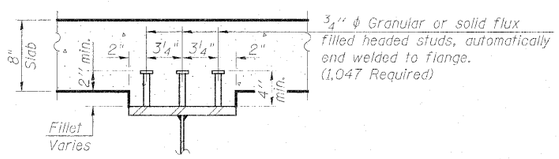

SECTION A-A

BEAM 13 FASCIA MOMENT TABLE								
		0.4 Span 1	Pier 4	0.5 Span 2	Pier 5	0.5 Span 3	Pier 6	0.6 span 4
I_s	(in^4)	6,680	6,680	6,680	6,680	6,680	6,680	6,680
$I_c(n)$	(in^4)	15,400		15,400		15,400		15,400
$I_c(3n)$	(in^4)	11,084		11,084		11,084		11,084
S_s	(in^3)	435	435	435	435	435	435	435
$S_c(n)$	(in^3)	606		606		606		606
$S_c(3n)$	(in^3)	541		541		541		541
w_D	(k/')	0.624	0.923	0.624	0.923	0.624	0.923	0.624
M_D	('k)	101	458	218	528	153	378	124
w_{SD}	(k/')	0.299		0.299		0.299		0.299
M_{SD}	('k)	56		123		89		66
M_L	('k)	211	167	297	187	268	150	212
M_I	('k)	58	43	70	45	66	39	58
$\frac{5}{3}[M_L + I]$	('k)	448	350	612	387	557	315	450
M_a	('k)	786	1,050	1,239	1,190	1,039	901	832
* M_u	('k)	2,786		2,786		2,786		2,786
f_s D non-comp	(ksi)	2.8	12.6	6.0	14.6	4.2	10.4	3.4
f_s D (comp)	(ksi)	1.2		2.7		2.0		1.5
f_s $\frac{5}{3}[M_L + M_I]$	(ksi)	8.9	9.7	12.1	10.7	11.0	8.7	8.9
f_s (Overload)	(ksi)	12.9	22.3	20.8	25.3	17.2	19.1	13.8
** f_s (Total)	(ksi)	16.8	29.0	27.0	32.9	22.4	24.8	17.9
VR	(k)	23.4		25.3		25.3		28.0

BEAM 13 FASCIA REACTION TABLE						
		Abut. C	Pier 4	Pier 5	Pier 6	Abut. D
R_D	(k)	17.8	71.6	77.1	65.7	19.2
R_L	(k)	19.5	26.4	27.9	25.4	19.6
R_I	(k)	5.4	4.9	4.9	4.9	5.4
R_{Total}	(k)	42.7	102.9	109.9	96.0	44.2

* Compact section
** Braced non-compact and partially braced section

I_s, S_s: Non-composite moment of inertia and section modulus of the steel section used for computing f_s (Total and Overload) due to non-composite dead loads ($in.^4$ and $in.^3$).
$I_c(n)$, $S_c(n)$: Composite moment of inertia and section modulus of the steel and deck based upon the modular ratio, "n", used for computing f_s (Total and Overload) due to short-term composite live loads ($in.^4$ and $in.^3$).
$I_c(3n)$, $S_c(3n)$: Composite moment of inertia and section modulus of the steel and deck based upon 3 times the modular ratio, "3n", used for computing f_s (Total and Overload) due to long-term composite (superimposed) dead loads ($in.^4$ and $in.^3$).
D: Un-factored non-composite dead load (kips/ft.).
M_D: Un-factored moment due to non-composite dead load (kip-ft.).
SD: Un-factored long-term composite (superimposed) dead load (kips/ft.)
M_{SD}: Un-factored moment due to long-term composite (superimposed) dead load (kip-ft.).
M_L: Un-factored live load moment (kip-ft.).
M_I: Un-factored moment due to impact (kip-ft.).
M_a: Factored design moment (kip-ft.).
$1.3\ [M_D + M_{SD} + \frac{5}{3}(M_L + M_I)]$
M_u: Compact composite moment capacity according to AASHTO LFD 10.50.1.1 or compact non-composite moment capacity according to AASHTO LFD 10.48.1 (kip-ft.).
f_s (Overload): Sum of stresses as computed from the moments below (ksi).
$M_D + M_{SD} + \frac{5}{3}(M_L + M_I)$
f_s (Total): Sum of stresses as computed from the moments below on non-compact section (ksi).
$1.3\ [M_D + M_{SD} + \frac{5}{3}(M_L + M_I)]$
VR: Maximum L + impact horizontal shear range within the composite portion of the span for stud shear connector design (kips).

TOP OF BEAM ELEVATIONS

(For Fabrication Use Only)

	℄ Brg. Abut. C	℄ Brg. Pier 4	℄ Field Splice D	℄ Brg. Pier 5	℄ Field Splice E	℄ Field Splice F	℄ Brg. Pier 6	℄ Brg. Abut. D
Beam 13	591.05	590.82	590.77	590.46	590.39	590.10	590.04	589.76

Notes:
All material on this sheet to be AASHTO M270 Grade 50 unless otherwise noted.
Load carrying components designated "NTR" shall conform to the Supplemental Requirement for Notch Toughness, Zone 2.
For Field Splice Detail see sheet 32 of 77.

DESIGNED	SPK
CHECKED	LAN
DRAWN	ASJ
CHECKED	SPK

INFRASTRUCTURE ENGINEERING | INCORPORATED
33 West Monroe | Suite 1540 | Chicago, IL 60603
P 312.425.9560 | F 312.425.9564 | www.infrastructure-eng.com

STEEL BEAM 13 DETAILS
STRUCTURE NO. 081-0024 (W.B.)
STRUCTURE NO. 081-0025 (E.B.)

SHEET NO. 33	F.A.I. RTE.	SECTION	COUNTY	TOTAL SHEETS	SHEET NO.
77 SHEETS	280	81-1(VB-1)R	ROCK ISLAND	503	369
			CONTRACT NO. 64815		
	FED. ROAD DIST. NO. _	ILLINOIS	FED. AID PROJECT		

STATE OF ILLINOIS
DEPARTMENT OF TRANSPORTATION

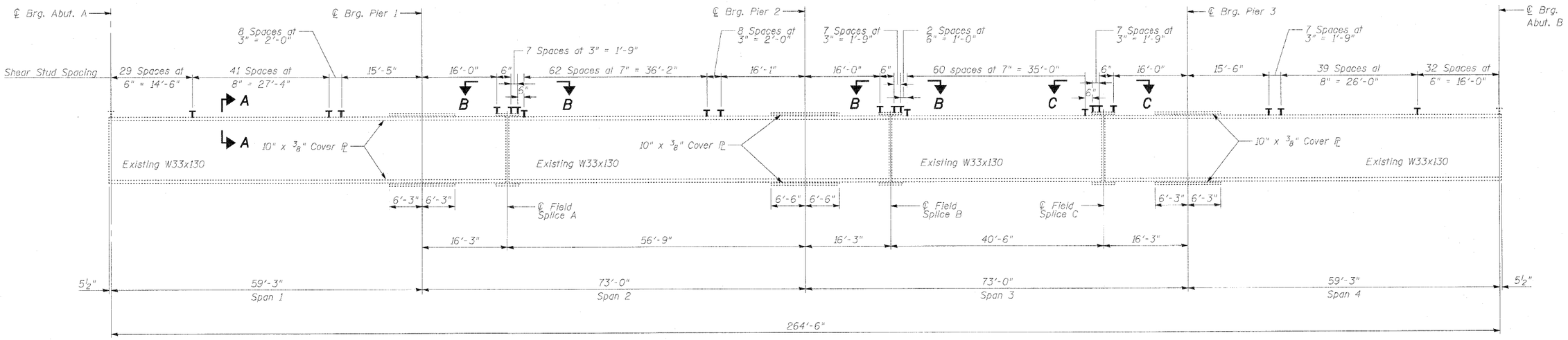

EXISTING BEAMS 1-6 ELEVATION

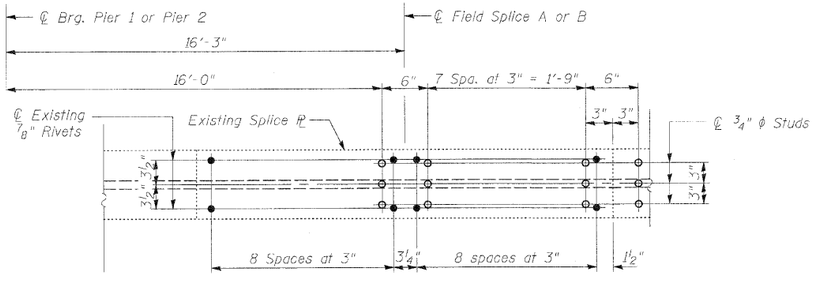

SECTION B-B

SECTION A-A

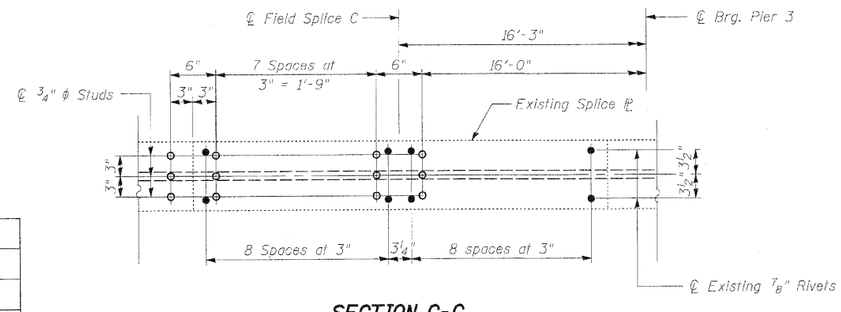

SECTION C-C

DESIGNED	SPK
CHECKED	LAN
DRAWN	ASJ
CHECKED	SPK

INFRASTRUCTURE ENGINEERING | INCORPORATED
33 West Monroe | Suite 1540 | Chicago, IL 60603
P 312.425.9560 | F 312.425.9564 | www.infrastructure-eng.com

EXISTING STEEL BEAMS 1-6 DETAILS
STRUCTURE NO. 081-0024 (W.B.)
STRUCTURE NO. 081-0025 (E.B.)

SHEET NO. 34	F.A.I. RTE.	SECTION	COUNTY	TOTAL SHEETS	SHEET NO.
	280	81-1(VB-1)R	ROCK ISLAND	503	370
77 SHEETS			CONTRACT NO. 64815		
	FED. ROAD DIST. NO. _	ILLINOIS	FED. AID PROJECT		

STATE OF ILLINOIS
DEPARTMENT OF TRANSPORTATION

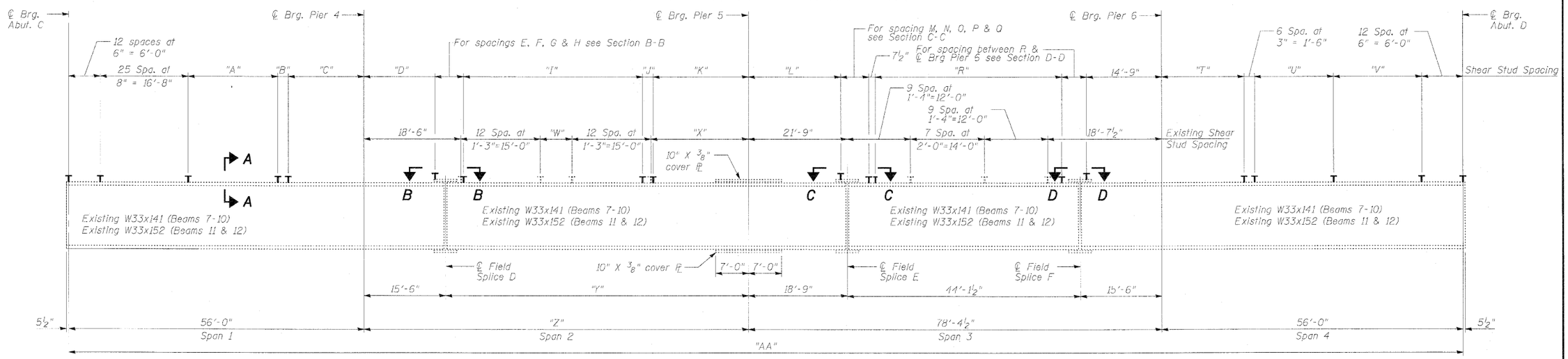

EXISTING BEAMS 7-12 ELEVATION

Note:
If the ¾"φ stud spacing locates a row of studs within 3½" of a row of existing ⅞" studs, relocate the row of ¾"φ studs so that it is 3½" away from the existing ⅞"φ studs.

SHEAR STUD SPACINGS AND DIMENSIONS TABLE

Beam	A	B	C	D	E	F	G	H	I	J	K	L	M	N
7	34 Spa. at 6" = 17'-0"	8 Spa. at 3" = 2'-0"	14'-4"	14'-3"	4 Spa. at 3" = 1'-0"	6"	2 Spa. at 3" = 6"	4 Spa. at 6" = 2'-0"	52 Spa. at 8" = 34'-8"	8 Spa. at 3" = 2'-0"	18'-0"	16'-6"	6 Spa. at 3" = 1'-6"	1 Spa. at 6" = 6"
8	33 Spa. at 6" = 16'-6"	8 Spa. at 3" = 2'-0"	14'-10"	14'-6"	3 Spa. at 3" = 9"	6"	4 Spa. at 3" = 1'-0"	5 Spa. at 6" = 2'-6"	54 Spa. at 8" = 36'-0"	8 Spa. at 3" = 2'-0"	17'-10 5/16"	17'-0"	6 Spa. at 3" = 1'-6"	-
9	32 Spa. at 6" = 16'-0"	7 Spa. at 3" = 1'-9"	15'-7"	14'-6"	3 Spa. at 3" = 9"	6"	4 Spa. at 3" = 1'-0"	7 Spa. at 6" = 3'-6"	56 Spa. at 8" = 37'-4"	7 Spa. at 3" = 1'-9"	17'-11 3/8"	17'-6"	4 Spa. at 3" = 1' 0"	-
10	30 Spa. at 6" = 15'-0"	8 Spa. at 3" = 2'-0"	16'-4"	14'-9"	2 Spa. at 3" = 6"	6"	4 Spa. at 3" = 1'-0"	5 Spa. at 6" = 2'-6"	61 Spa. at 8" = 40'-8"	7 Spa. at 3" = 1'-9"	17'-9 5/8"	18'-0"	2 Spa. at 3" = 6"	-
11	29 Spa. at 6" = 14'-6"	7 Spa. at 3" = 1'-9"	17'-1"	15'-0"	1 Spa. at 3" = 3"	6"	5 Spa. at 3" = 1'-3"	5 Spa. at 6" = 2'-6"	64 Spa. at 8" = 42'-8"	7 Spa. at 3" = 1'-9"	17'-8 13/16"	19'-0"	-	-
12	27 Spa. at 6" = 13'-6"	8 Spa. at 3" = 2'-0"	17'-10"	15'-9"	-	-	7 Spa. at 3" = 1'-9"	3 Spa. at 6" = 1'-6"	68 Spa. at 8" = 45'-4"	7 Spa. at 3" = 1'-9"	17'-9"	19'-3"	-	-

SHEAR STUD SPACINGS AND DIMENSIONS TABLE

Beam	O	P	Q	R	S	T	U	V	W	X	Y	Z	AA
7	6"	-	5 Spa. at 6" = 2'-6"	57 Spa. at 8" = 38'-0"	4 Spa. at 3" = 1'-0"	16'-4"	31 Spa. at 6" = 15'-6"	25 Spa. at 8" = 16'-8"	3 Spa. at 2'-0" = 6'-0"	18'-5"	57'-5"	72'-11"	263'-3½"
8	6"		5 Spa. at 6" = 2'-6"	57 Spa. at 8" = 38'-0"	4 Spa. at 3" = 1'-0"	16'-2"	30 Spa. at 6" = 15'-0"	26 Spa. at 8" = 17'-4"	4 Spa. at 2'-0" = 8'-0"	18'-7 7/16"	59'-7 7/16"	75'-1 3/16"	265'-5 11/16"
9	6"	2 Spa. at 3" = 6"	8 Spa. at 6" = 4'-0"	54 Spa. at 8" = 36'-0"	4 Spa. at 3" = 1'-0"	16'-0"	29 Spa. at 6" = 14'-6"	27 Spa. at 8" = 18'-0"	5 Spa. at 2'-0" = 10'-0"	18'-9 3/8"	61'-9 3/8"	77'-3 3/8"	267'-7⅞"
10	6"	4 Spa. at 3" = 1'-0"	3 Spa. at 6" = 1'-6"	57 Spa. at 8" = 38'-0"	4 Spa. at 3" = 1'-0"	15'-10"	28 Spa. at 6" = 14'-0"	28 Spa. at 8" = 18'-8"	6 Spa. at 2'-0" = 12'-0"	18'-11⅝"	63'-11⅝"	79'-5⅝"	269'-10⅛"
11	-	9 Spa. at 3" = 2'-3"	4 Spa. at 6" = 2'-0"	54 Spa. at 8" = 36'-0"	5 Spa. at 3" = 1'-3"	15'-8"	27 Spa. at 6" = 13'-6"	29 Spa. at 8" = 19'-4"	7 Spa. at 2'-0" = 14'-0"	19'-1 13/16"	66'-1 13/16"	81'-7 13/16"	272'-0 5/16"
12	-	6 Spa. at 3" = 1'-6"	5 Spa. at 6" = 2'-6"	54 Spa. at 8" = 36'-0"	5 Spa. at 3" = 1'-3"	15'-6"	26 Spa. at 6" = 13'-0"	30 Spa. at 8" = 20'-0"	8 Spa. at 2'-0" = 16'-0"	19'-4"	68'-4"	83'-10"	274'-2½"

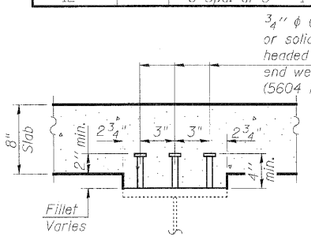

SECTION A-A

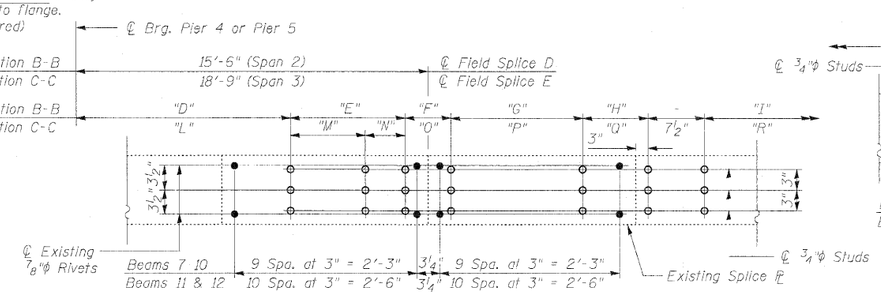

SECTION B-B
SECTION C-C

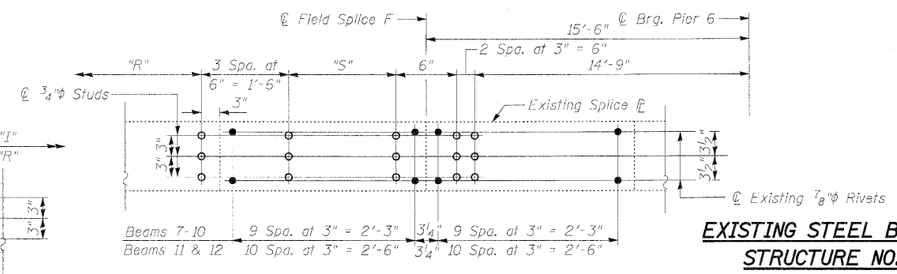

SECTION D-D

EXISTING STEEL BEAMS 7-12 DETAILS
STRUCTURE NO. 081-0024 (W.B.)
STRUCTURE NO. 081-0025 (E.B.)

DESIGNED	SPK
CHECKED	LAN
DRAWN	ASJ
CHECKED	SPK

INFRASTRUCTURE ENGINEERING | INCORPORATED
33 West Monroe | Suite 1540 | Chicago, IL 60603
P 312.425.9560 | F 312.425.9564 | www.infrastructure-eng.com

SHEET NO. 35	F.A.I. RTE.	SECTION	COUNTY	TOTAL SHEETS	SHEET NO.
77 SHEETS	280	81-1(VB-1)R	ROCK ISLAND	503	371
			CONTRACT NO. 64815		
	FED. ROAD DIST. NO. _	ILLINOIS	FED. AID PROJECT		

STATE OF ILLINOIS
DEPARTMENT OF TRANSPORTATION

	BEAMS 2-5 MOMENT TABLE							
		0.4 Span 1	Pier 1	0.5 Span 2	Pier 2	0.5 Span 3	Pier 3	0.6 Span 4
I_s	(in^4)	6,710	8,811	6,710	8,811	6,710	8,811	6,710
$I_c(n)$	(in^4)	22,118	-	22,118	-	22,118	-	22,118
$I_c(3n)$	(in^4)	15,590	-	15,590	-	15,590	-	15,590
S_s	(in^3)	405	521	405	521	405	521	405
$S_c(n)$	(in^3)	682	-	682	-	682	-	682
$S_c(3n)$	(in^3)	604	-	604	-	604	-	604
$\wp$	(k/')	0.846	1.189	0.846	1.189	0.846	1.189	0.846
$M\wp$	('k)	203	503	181	509	181	503	203
$s\wp$	(k/')	0.317	-	0.317	-	0.317	-	0.317
$M_s\wp$	('k)	86	-	88	-	88	-	86
$M\llcorner$	('k)	399	242	434	263	434	242	399
M_I	('k)	109	64	110	66	110	64	109
$\frac{5}{3}[M\llcorner + I]$	('k)	847	510	907	548	907	510	847
M_a	('k)	1,477	1317	1,529	1,374	1,529	1,317	1,477
* M_u	('k)	2,224	-	2,744	-	2,744	-	2,189
f_s $\wp$ non-comp	(ksi)	6.0	11.6	5.4	11.7	5.4	11.6	6.0
f_s $\wp$ (comp)	(ksi)	1.7	-	1.7	-	1.7	-	1.7
f_s $\frac{5}{3}[M\llcorner + M_I]$	(ksi)	14.9	11.7	16.0	12.6	16.0	11.7	14.9
f_s (Overload)	(ksi)	22.6	23.3	23.1	24.3	23.1	23.3	22.6
** f_s (Total)	(ksi)	-	30.3	-	31.6	-	30.3	-
VR	(k)	53.9	-	43.3	-	43.3	-	53.9

	BEAMS 2-5 REACTION TABLE					
		Abut. A	Pier 1	Pier 2	Pier 3	Abut. B
$R\wp$	(k)	26.8	85.5	85.3	85.5	26.8
$R\llcorner$	(k)	38.9	44.6	45.1	44.6	38.9
R_I	(k)	10.6	8.7	8.3	8.7	10.6
R_{Total}	(k)	76.3	138.8	138.7	138.8	76.3

	BEAM 10 MOMENT TABLE							
		0.4 Span 1	Pier 4	0.5 Span 2	Pier 5	0.5 Span 3	Pier 6	0.6 Span 4
I_s	(in^4)	7,450	7,450	7,450	9,576	7,450	7,450	7,450
$I_c(n)$	(in^4)	23,793	-	23,793	-	23,793	-	23,793
$I_c(3n)$	(in^4)	16,670	-	16,670	-	16,670	-	16,670
S_s	(in^3)	447	447	447	583	447	447	447
$S_c(n)$	(in^3)	741	-	741	-	741	-	741
$S_c(3n)$	(in^3)	655	-	655	-	655	-	655
$\wp$	(k/')	0.858	1.175	0.858	1.200	0.858	1.175	0.858
$M\wp$	('k)	167	511	239	644	226	496	172
$s\wp$	(k/')	0.317	-	0.317	-	0.317	-	0.317
$M_s\wp$	('k)	71	-	111	-	106	-	72
$M\llcorner$	('k)	374	248	485	299	477	243	374
M_I	('k)	103	64	118	73	118	63	104
$\frac{5}{3}[M\llcorner + I]$	('k)	795	520	1,005	620	992	510	797
M_a	('k)	1,343	1,340	1,762	1,643	1,721	1,308	1,353
* M_u	('k)	3,094	1,542	2,529	-	2,514	1,542	3,094
f_s $\wp$ non-comp	(ksi)	4.5	13.7	6.4	13.7	6.1	13.3	4.6
f_s $\wp$ (comp)	(ksi)	1.3	-	2.0	-	1.9	-	1.3
f_s $\frac{5}{3}[M\llcorner + M_I]$	(ksi)	12.9	14.0	16.3	13.2	16.1	13.7	12.9
f_s (Overload)	(ksi)	18.7	27.7	24.7	26.9	24.1	27.0	18.8
** f_s (Total)	(ksi)	-	-	-	35.0	-	-	-
VR	(k)	54.4	-	44.4	-	44.2	-	54.1

	BEAM 10 REACTION TABLE					
		Abut. C	Pier 4	Pier 5	Pier 6	Abut. D
$R\wp$	(k)	24.6	87.0	96.5	85.9	24.8
$R\llcorner$	(k)	38.6	44.8	47.5	44.8	38.6
R_I	(k)	10.6	8.7	8.4	8.6	10.6
R_{Total}	(k)	73.8	140.5	152.4	139.3	74.0

	BEAM 11 MOMENT TABLE							
		0.4 Span 1	Pier 4	0.5 Span 2	Pier 5	0.5 Span 3	Pier 6	0.6 Span 4
I_s	(in^4)	8,160	8,160	8,160	10,312	8,160	8,160	8,160
$I_c(n)$	(in^4)	25,381	-	25,381	-	25,381	-	25,381
$I_c(3n)$	(in^4)	17,692	-	17,692	-	17,692	-	17,692
S_s	(in^3)	487	487	487	602	487	487	487
$S_c(n)$	(in^3)	797	-	797	-	797	-	797
$S_c(3n)$	(in^3)	703	-	703	-	703	-	703
$\wp$	(k/')	0.869	1.186	0.869	1.211	0.869	1.186	0.869
$M\wp$	('k)	162	541	264	670	224	497	176
$s\wp$	(k/')	0.317	-	0.317	-	0.317	-	0.317
$M_s\wp$	('k)	68	-	119	-	104	-	72
$M\llcorner$	('k)	372	256	502	306	477	244	374
M_I	('k)	102	66	121	75	118	64	103
$\frac{5}{3}[M\llcorner + I]$	('k)	790	537	1,038	635	992	513	795
M_a	('k)	1,326	1,401	1,847	1,697	1,716	1,313	1,356
* M_u	('k)	3,302	1,677	2,791	-	2,744	1,677	3,302
f_s $\wp$ non-comp	(ksi)	4.0	13.3	6.5	13.4	5.5	12.2	4.3
f_s $\wp$ (comp)	(ksi)	1.2	-	2.0	-	1.8	-	1.2
f_s $\frac{5}{3}[M\llcorner + M_I]$	(ksi)	11.9	13.2	15.6	12.7	14.9	12.6	12.0
f_s (Overload)	(ksi)	17.1	26.5	24.1	26.1	22.2	24.8	17.5
** f_s (Total)	(ksi)	-	-	-	33.9	-	-	-
VR	(k)	54.4	-	44.3	-	44.4	-	54.1

	BEAM 11 REACTION TABLE					
		Abut. C	Pier 4	Pier 5	Pier 6	Abut. D
$R\wp$	(k)	24.3	89.7	98.9	86.3	25.1
$R\llcorner$	(k)	38.5	44.9	48.0	44.8	38.6
R_I	(k)	10.7	8.6	8.4	8.6	10.6
R_{Total}	(k)	73.5	143.2	155.3	139.7	74.3

I_s, S_s: Non-composite moment of inertia and section modulus of the steel section used for computing f_s(Total and Overload) due to non-composite dead loads ($in.^4$ and $in.^3$).

$I_c(n)$, $S_c(n)$: Composite moment of inertia and section modulus of the steel and deck based upon the modular ratio, "n", used for computing f_s(Total and Overload) due to short-term composite live loads ($in.^4$ and $in.^3$).

$I_c(3n)$, $S_c(3n)$: Composite moment of inertia and section modulus of the steel and deck based upon 3 times the modular ratio, "3n", used for computing f_s(Total and Overload) due to long-term composite (superimposed) dead loads ($in.^4$ and $in.^3$).

$\wp$: Un-factored non-composite dead load (kips/ft.).

$M\wp$: Un-factored moment due to non-composite dead load (kip-ft.).

$s\wp$: Un-factored long-term composite (superimposed) dead load (kips/ft.)

$M_s\wp$: Un-factored moment due to long-term composite (superimposed) dead load (kip-ft.).

$M\llcorner$: Un-factored live load moment (kip-ft.).

M_I: Un-factored moment due to impact (kip-ft.).

M_a: Factored design moment (kip-ft.).
$1.3\ [M\wp + M_s\wp + \frac{5}{3}(M\llcorner + M_I)]$

M_u: Compact composite moment capacity according to AASHTO LFD 10.50.1.1 or compact non-composite moment capacity according to AASHTO LFD 10.48.1 (kip-ft.).

f_s (Overload): Sum of stresses as computed from the moments below (ksi).
$M\wp + M_s\wp + \frac{5}{3}(M\llcorner + M_I)$

f_s (Total): Sum of stresses as computed from the moments below on non-compact section (ksi).
$1.3\ [M\wp + M_s\wp + \frac{5}{3}(M\llcorner + M_I)]$

VR: Maximum $\llcorner$ + impact horizontal shear range within the composite portion of the span for stud shear connector design (kips).

DESIGNED	SPK
CHECKED	
DRAWN	ASJ
CHECKED	SPK

* Compact section
** Braced non-compact and partially braced section

INFRASTRUCTURE ENGINEERING | INCORPORATED
33 West Monroe | Suite 1540 | Chicago, IL 60603
P 312.425.9560 | F 312.425.9564 | www.infrastructure-eng.com

EXISTING BEAMS DESIGN DATA TABLES
STRUCTURE NO. 081-0024 (W.B.)
STRUCTURE NO. 081-0025 (E.B.)

SHEET NO. 36	F.A.I. RTE.	SECTION	COUNTY	TOTAL SHEETS	SHEET NO.
77 SHEETS	280	81-1(VB-1)R	ROCK ISLAND	503	372
			CONTRACT NO. 64815		
	FED. ROAD DIST. NO. _	ILLINOIS	FED. AID PROJECT		

STATE OF ILLINOIS
DEPARTMENT OF TRANSPORTATION

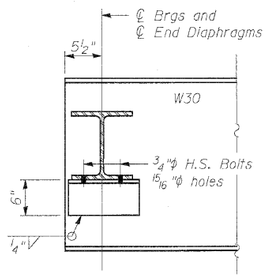

SECTION A-A

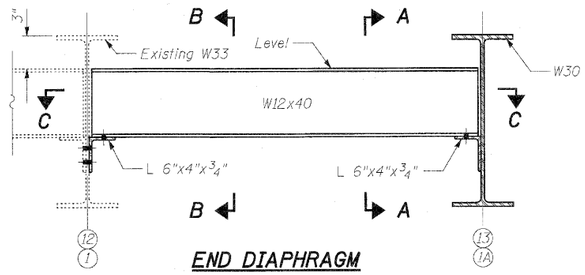

END DIAPHRAGM
(4 Required)

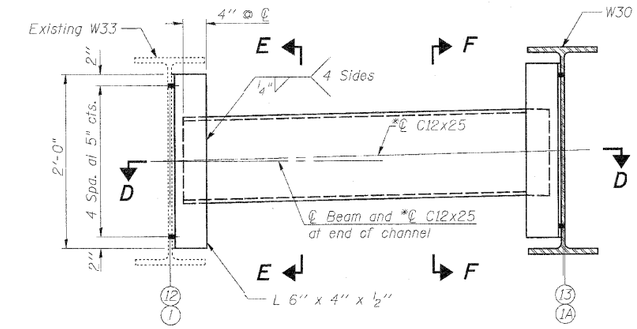

INTERIOR DIAPHRAGM
(24 Required)

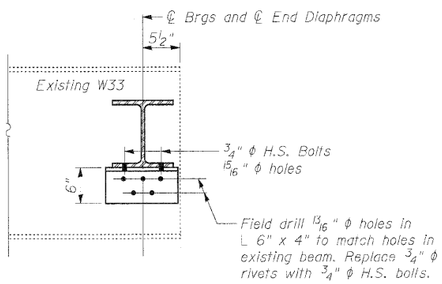

SECTION B-B

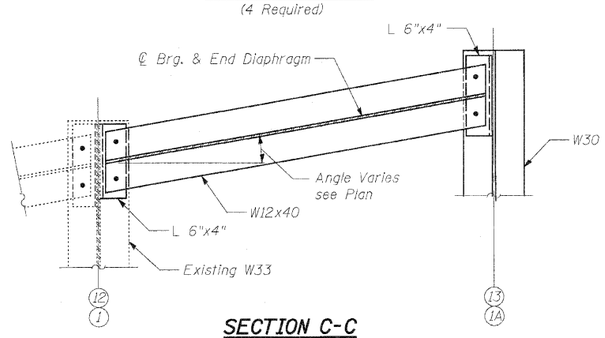

SECTION C-C

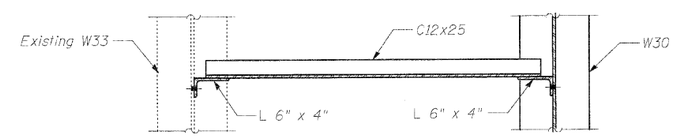

SECTION D-D

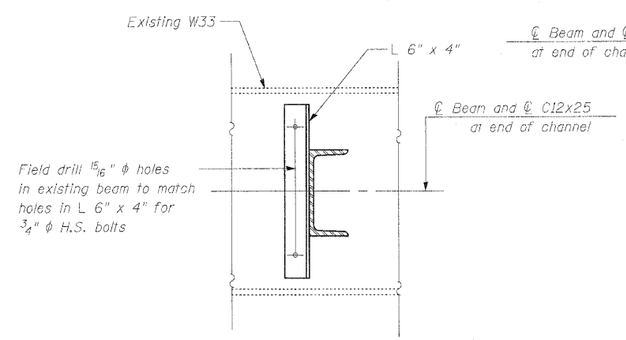

SECTION E-E

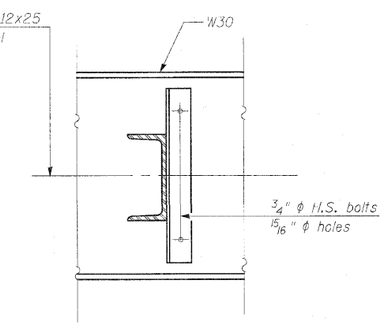

SECTION F-F

DIAPHRAGMS
STRUCTURE NO. 081-0024 (W.B.)
STRUCTURE NO. 081-0025 (E.B.)

Notes:
Two hardened washers required for each set of oversized holes.
*Alternate channel C12x30 is permitted to facilitate material acquisition. Calculated weight of structural steel is based on the lighter section. The alternate, if utilized, shall be provided at no additional cost to the Department.

DESIGNED	SST
CHECKED	SPK
DRAWN	ASJ
CHECKED	SPK

INFRASTRUCTURE ENGINEERING INCORPORATED
33 West Monroe | Suite 1540 | Chicago, IL 60603
P 312.425.9560 | F 312.425.9564 | www.infrastructure-eng.com

SHEET NO. 37	F.A.I. RTE.	SECTION	COUNTY	TOTAL SHEETS	SHEET NO.
77 SHEETS	280	81-1(VB-1)R	ROCK ISLAND	503	373
			CONTRACT NO. 64815		
	FED. ROAD DIST. NO. _	ILLINOIS	FED. AID PROJECT		

STATE OF ILLINOIS
DEPARTMENT OF TRANSPORTATION

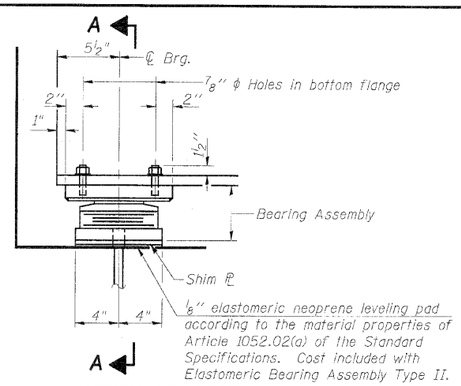

ELEVATION AT ABUT.

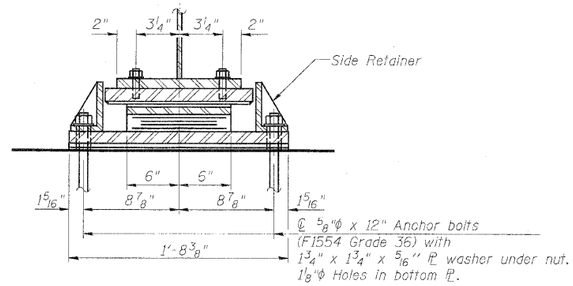

SECTION A-A

TYPE II ELASTOMERIC EXP. BRG.

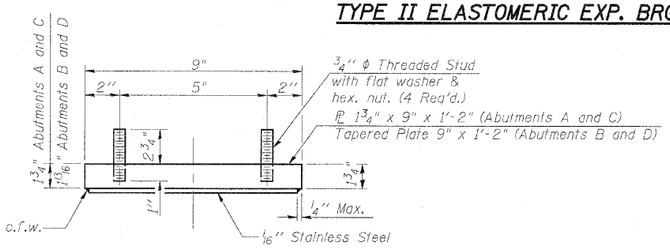

TOP BEARING ASSEMBLY

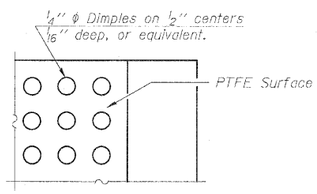

PLAN-PTFE SURFACE

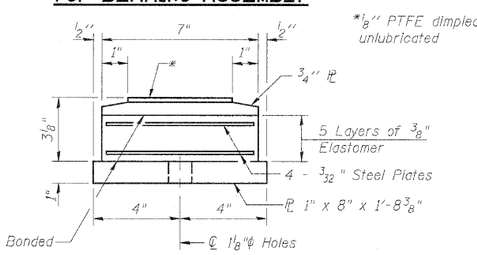

BOTTOM BEARING ASSEMBLY

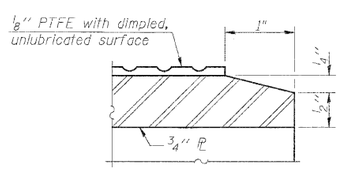

SECTION THRU PTFE

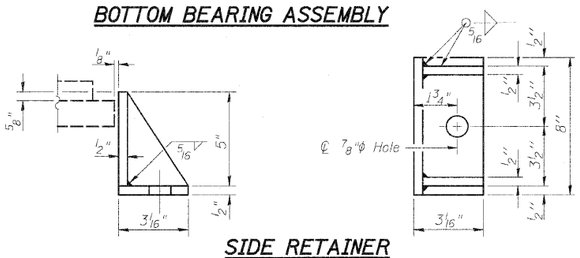

SIDE RETAINER

Equivalent rolled angle with stiffeners will be allowed in lieu of welded plates.

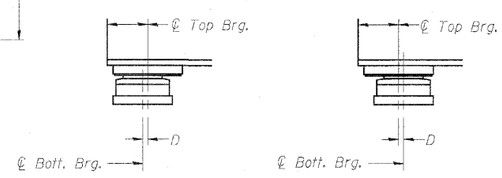

BELOW 50°F.
(Move bott. brg. away from fixed brg.)

ABOVE 50°F.
(Move bott. brg. toward fixed brg.)

SETTING ANCHOR BOLTS AT EXP. BRG.

D=⅛" per each 100' of expansion for every 15° temp. change from the normal temp. of 50°F.

Notes:

Anchor bolts shall be ASTM F1554 all-thread (or an Engineer-approved alternate material) of the grade(s) and diameter(s) specified. ASTM A307 Grade C anchor bolts may be used in lieu of ASTM F1554 Grade 36 (Fy=36ksi). The corresponding specified grade of AASHTO M314 anchor bolts may be used in lieu of ASTM F1554.

Anchor bolts for Type II bearings shall be placed in holes drilled in the concrete through holes in the bottom bearing plate after members are in place. Side retainers shall be placed after bolts are installed.

Drilled and set anchor bolts shall be installed according to Article 521.06 of the Standard Specifications.

Side retainers and other steel members required for the bearing assembly shall be included in the cost of Elastomeric Bearing Assembly, Type II.

The ⅛" PTFE sheet shall be bonded directly to the top steel plate with a two-component, medium viscosity epoxy resin, conforming to the requirements of the Federal Specification MMM-A-134, Type I. The bond agent shall be applied on the full area of the contact surfaces.

Bonding of ⅛" PTFE sheet during vulcanizing process will be permitted provided the process and method of adjusting assembly height is approved by the Engineer.

Two ⅛" adjusting shims shall be provided for each bearing in addition to all other plates or shims and placed as shown on bearing details.

BILL OF MATERIAL

Item	Unit	Total
Elastomeric Bearing Assembly Type II	Each	4
Anchor Bolts, ⅝"	Each	8

BEARING DETAILS - ABUTMENTS
STRUCTURE NO. 081-0024 (W.B.)
STRUCTURE NO. 081-0025 (E.B.)

DESIGNED	SST
CHECKED	SPK
DRAWN	ASJ
CHECKED	SPK

INFRASTRUCTURE ENGINEERING | INCORPORATED
33 West Monroe | Suite 1540 | Chicago, IL 60603
P 312.425.9560 | F 312.425.9564 | www.infrastructure-eng.com

SHEET NO. 38	F.A.I. RTE.	SECTION	COUNTY	TOTAL SHEETS	SHEET NO.
77 SHEETS	280	81-1(VB-1)R	ROCK ISLAND	503	374
			CONTRACT NO. 64815		
	FED. ROAD DIST. NO. _	ILLINOIS	FED. AID PROJECT		

STATE OF ILLINOIS
DEPARTMENT OF TRANSPORTATION

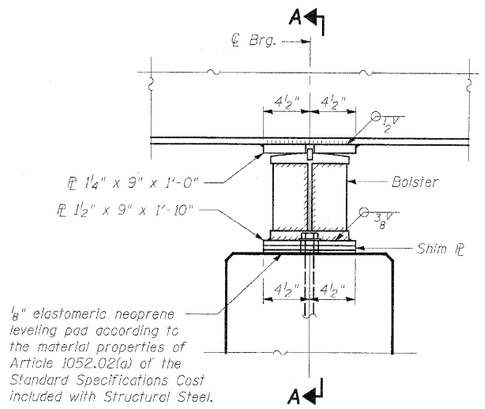

ELEVATION AT PIER 2 & PIER 5

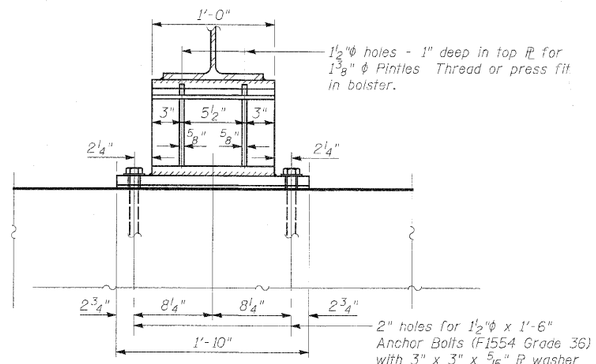

SECTION A-A

FIXED BEARING
(2 Required)

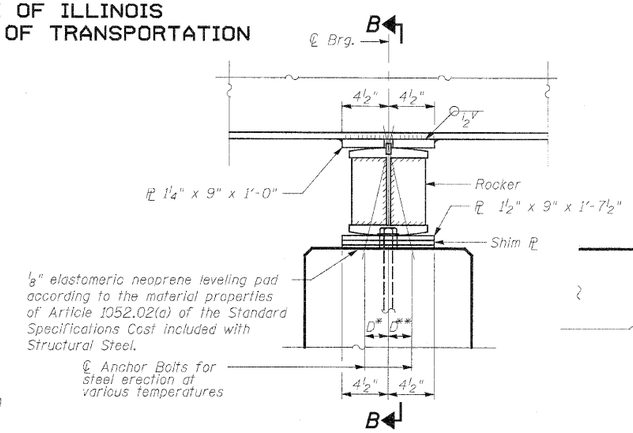

ELEVATION AT PIER 1, PIER 3, PIER 4 & PIER 6

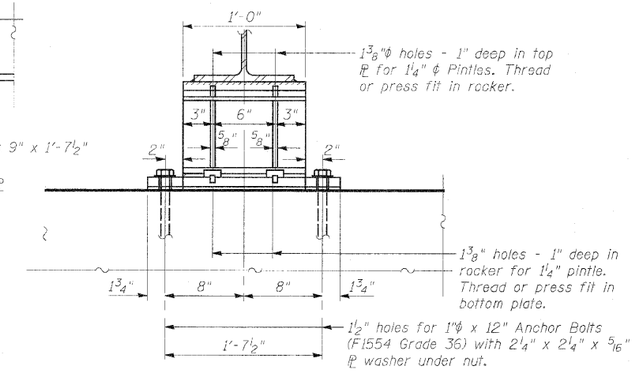

SECTION B-B

EXPANSION BEARING
(4 Required)

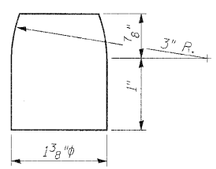

BOLSTER PINTLE DETAIL

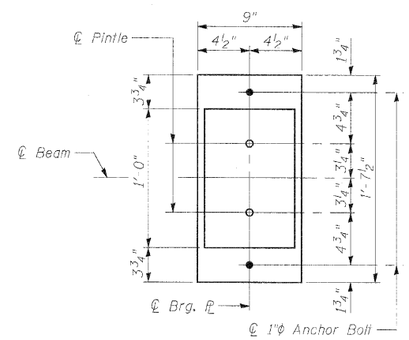

PLAN

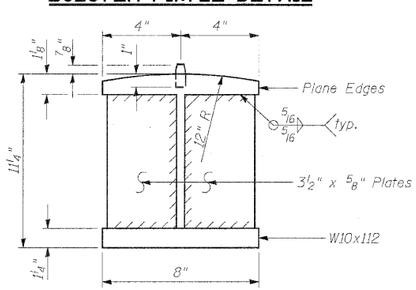

BOLSTER DETAIL

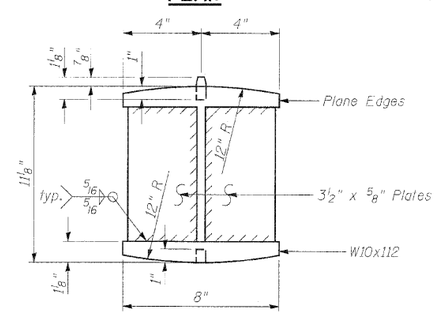

ROCKER DETAIL

NOTES FOR SETTING OF ANCHOR BOLTS AT EXPANSION BEARINGS

a). D* (Side of brg. away from fixed brg.)
D* = ⅛" per each 100' of expansion for every 15° fall below the normal temp. of 50° F.
D** (Side of brg. toward fixed brg.)
D** = ⅛" per each 100' of expansion for every 15° rise above the normal temp. of 50° F.

b). After beams have been erected and dimensions D* & D** determined, holes shall be drilled and anchor bolts shall be installed.

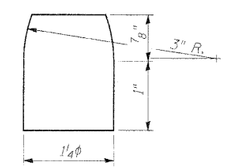

ROCKER PINTLE DETAIL

BILL OF MATERIAL

ITEM	UNIT	QUANTITY
Anchor Bolts, 1"	Each	8
Anchor Bolts, 1½"	Each	4

Notes:
Anchor bolts shall be ASTM F1554 all-thread (or an Engineer-approved alternate material) of the grade and diameters specified. ASTM A307 Grade C anchor bolts may be used in lieu of ASTM F1554 Grade 36 (Fy=36ksi). The corresponding specified grade of AASHTO M314 anchor bolts may be used in lieu of ASTM F1554.
Anchor bolts at fixed bearings may be either cast in place or installed in holes drilled after the support member is in place.
Drilled and set anchor bolts shall be installed according to Article 521.06 of the Standard Specifications.
Two ⅛" adjusting shims shall be provided for each bearing in addition to all other plates or shims and placed as shown on bearing details.

BEARING DETAILS -PIERS
STRUCTURE NO. 081-0024 (W.B.)
STRUCTURE NO. 081-0025 (E.B.)

DESIGNED	SST
CHECKED	SPK
DRAWN	ASJ
CHECKED	SPK

INFRASTRUCTURE ENGINEERING | INCORPORATED
33 West Monroe | Suite 1540 | Chicago, IL 60603
P 312.425.9560 | F 312.425.9564 | www.infrastructure-eng.com

SHEET NO. 39	F.A.I. RTE.	SECTION	COUNTY	TOTAL SHEETS	SHEET NO.
77 SHEETS	280	81-1(VB-1)R	ROCK ISLAND	503	375
			CONTRACT NO. 64815		
	FED. ROAD DIST. NO. _	ILLINOIS	FED. AID PROJECT		

STATE OF ILLINOIS
DEPARTMENT OF TRANSPORTATION

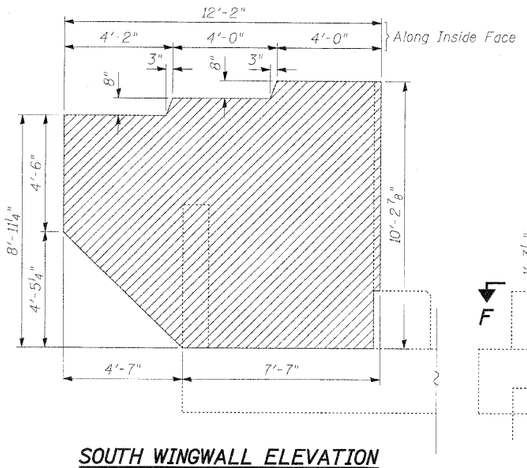

SOUTH WINGWALL ELEVATION

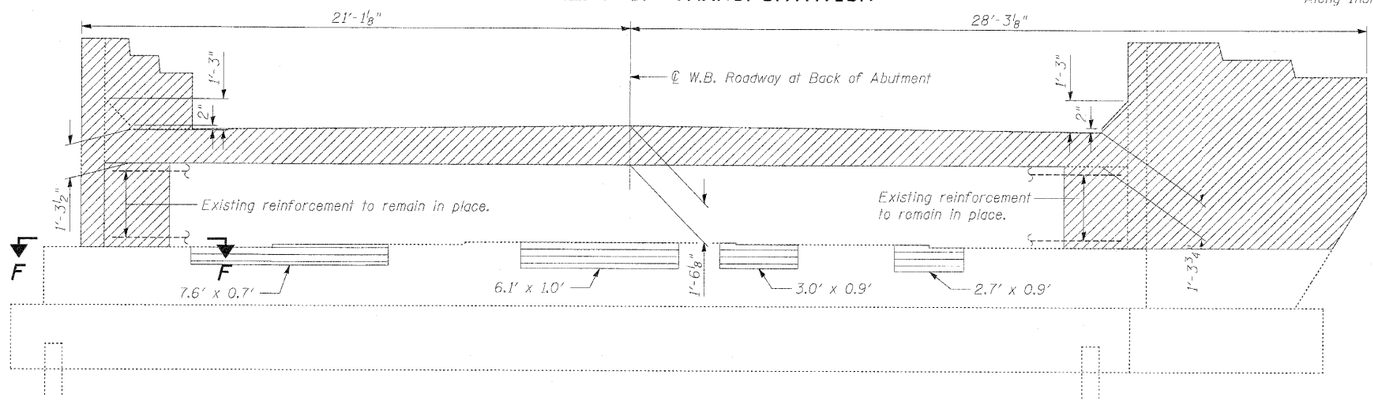

ELEVATION

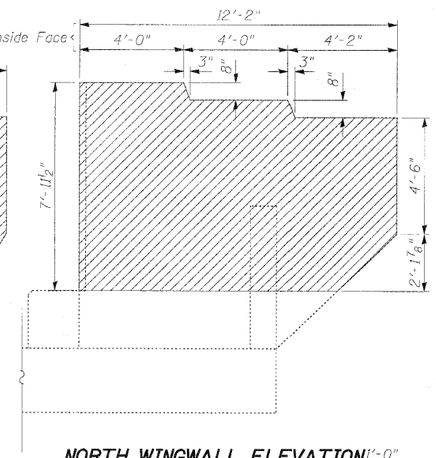

NORTH WINGWALL ELEVATION

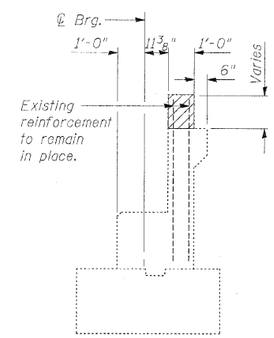

SECTION A-A

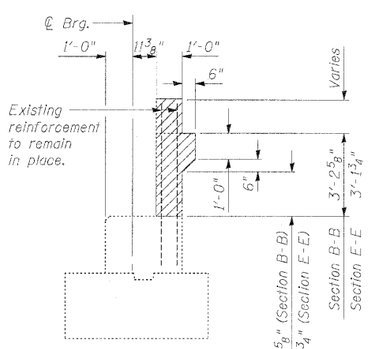

SECTION B-B
SECTION E-E

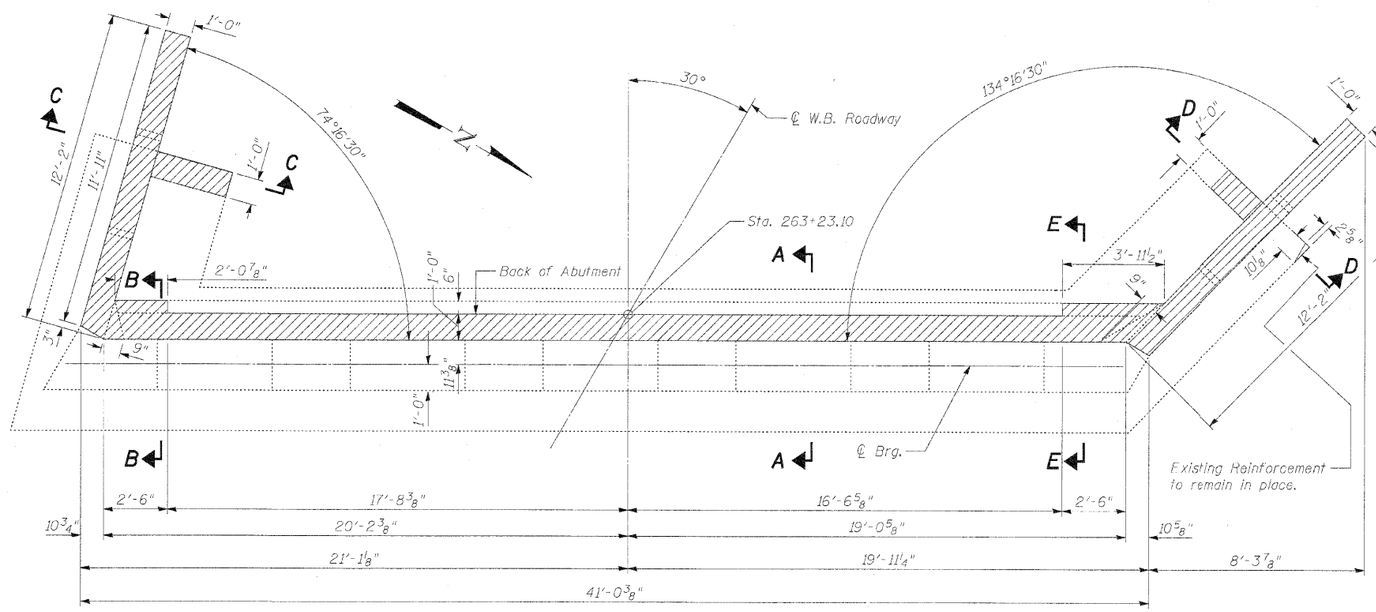

TOP VIEW

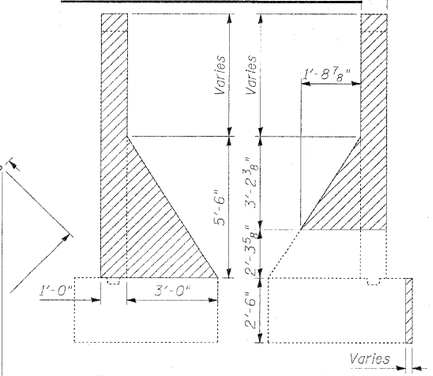

SECTION C-C
SECTION D-D

Notes:

Existing reinforcement bars not extending into the new construction shall be cut flush with the concrete left in place unless noted otherwise. Cost included with Concrete Removal.

Existing exposed reinforcement indicated to remain in place shall be cleaned and incorporated into the new construction. Cost included with Concrete Removal.

Repair of the existing abutment shall include but not be limited to the areas shown. The actual areas to be repaired will be determined by the Engineer at the time of construction.

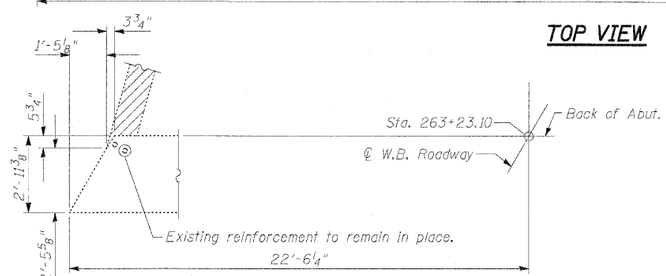

SECTION F-F

Indicates limits of Concrete Removal

Indicates limits of Structural Repair of Concrete (Depth Equal to or Less Than 5 Inches)

BILL OF MATERIAL

Item	Unit	Total
Concrete Removal	Cu. Yd.	10.4
Structural Repair of Concrete (Depth Equal to or Less Than 5 Inches)	Sq. Ft.	17

ABUTMENT A CONCRETE REMOVAL & REPAIRS
STRUCTURE NO. 081-0024 (W.B.)
STRUCTURE NO. 081-0025 (E.B.)

DESIGNED	LAN
CHECKED	SPK
DRAWN	LAN
CHECKED	SPK

INFRASTRUCTURE ENGINEERING | INCORPORATED
33 West Monroe | Suite 1540 | Chicago, IL 60603
P 312.425.9560 | F 312.425.9564 | www.infrastructure-eng.com

SHEET NO. 40	F.A.I. RTE.	SECTION	COUNTY	TOTAL SHEETS	SHEET NO.
77 SHEETS	280	81-1(VB-1)R	ROCK ISLAND	503	376
			CONTRACT NO. 64815		
	FED. ROAD DIST. NO. _	ILLINOIS	FED. AID PROJECT		

P:\P-25\1719\DGN\Sheets\Iowa Interstate RR Final Plans\E6810024-64815-B42-Abut-A Rem.dgn
12:40:18 PM
7/22/2010
1719

STATE OF ILLINOIS
DEPARTMENT OF TRANSPORTATION

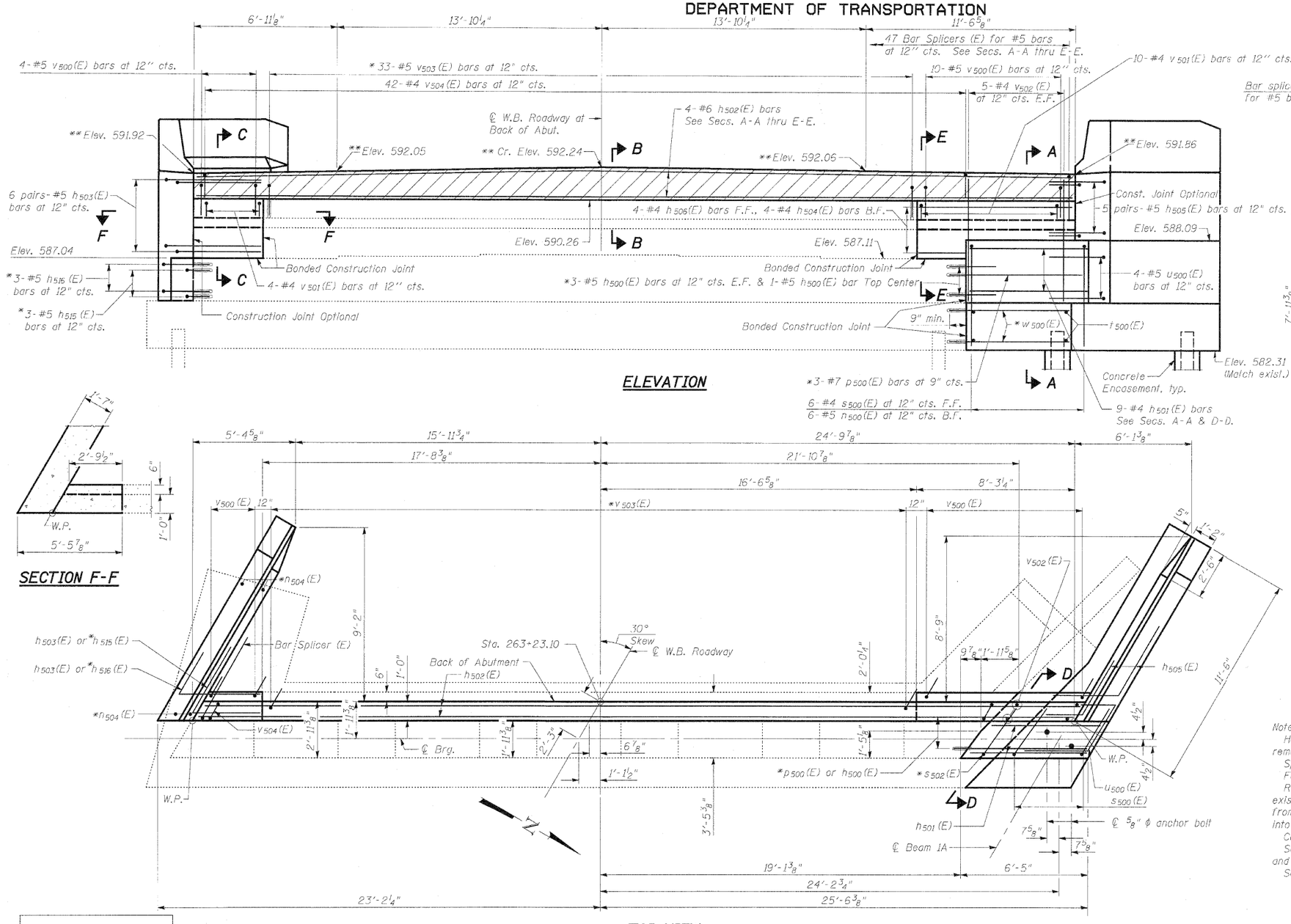

ELEVATION

SECTION F-F

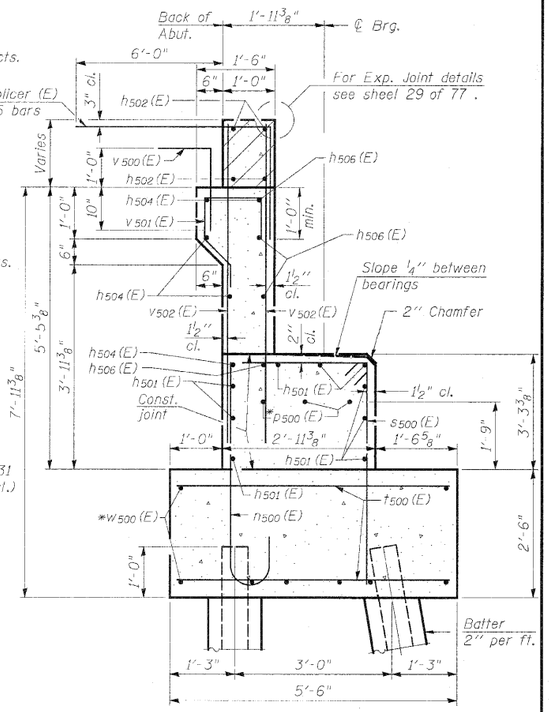

SECTION A-A

TOP VIEW

* Epoxy grout h500(E), h515(E), h516(E), p500(E), s502(E), v503(E), and w500(E) bars in 9" (min.) drilled holes. See Section 584 of the Standard Specifications. Cost of hole drilling and epoxy grouting are included with "Reinforcement Bars, Epoxy Coated".

** Elevation at Back of Abutment
B.F. = Back Face
E.F. = Each Face
F.F. = Front Face

Notes:
Hatched area to be poured after superstructure false work has been removed. Quantity of concrete included with Concrete Superstructure.
Space reinforcement in cap to miss anchor bolts.
For Concrete Encasement details, see sheet 70 of 77.
Reinforcement bars that are to be grouted into existing concrete shall be spaced at least 6" (unless noted) from the edge of existing concrete and shall be embedded into the existing concrete a minimum of 9".
Contractor shall avoid drilling into existing reinforcement.
See Sheet 42 of 77 for Footing Plan, North Wing Wall, and Secs. B-B, C-C, D-D, & E-E.
See Sheet 43 of 77 for South Wing Wall and Bill of Material.

ABUTMENT A WIDENING
STRUCTURE NO. 081-0024 (W.B.)
STRUCTURE NO. 081-0025 (E.B.)

DESIGNED	LAN
CHECKED	MMB
DRAWN	LAN
CHECKED	MMB

INFRASTRUCTURE ENGINEERING | INCORPORATED
33 West Monroe | Suite 1540 | Chicago, IL 60603
P 312.425.9560 | F 312.425.9564 | www.infrastructure-eng.com

SHEET NO. 41	F.A.I. RTE.	SECTION	COUNTY	TOTAL SHEETS	SHEET NO.
77 SHEETS	280	81-1(VB-1)R	ROCK ISLAND	503	377
			CONTRACT NO. 64815		
	FED. ROAD DIST. NO. _	ILLINOIS	FED. AID PROJECT		

PAP-(85\173\DGN\Sheets\Vaca Interstate 88 Final Plans\28110224-64815-041-Abut A Widening) 12:48:54 PM 7/22/2013

STATE OF ILLINOIS
DEPARTMENT OF TRANSPORTATION

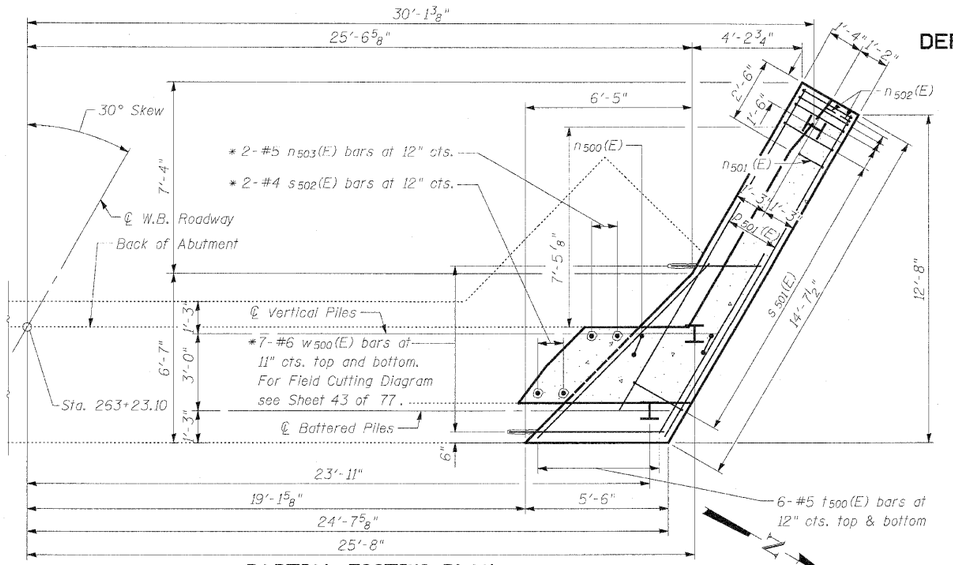

PARTIAL FOOTING PLAN

PILE DATA

Type: HP8x36 with Pile Shoes
Nominal Required Bearing: 286 kips
Allowable Resistance Available: 95 kips
Est. Length: 32'
No. Production Piles: 3
No. Test Piles: 0

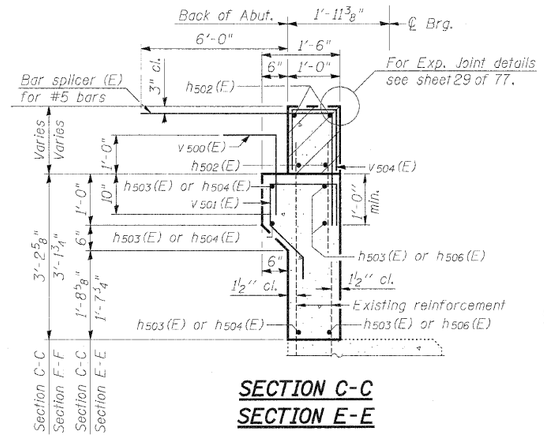

SECTION C-C
SECTION E-E

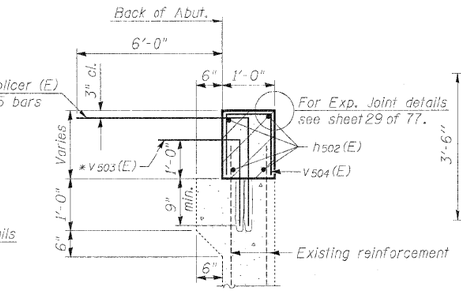

SECTION B-B

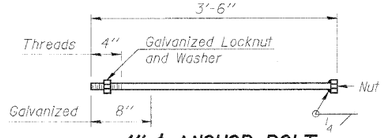

1" ϕ ANCHOR BOLT

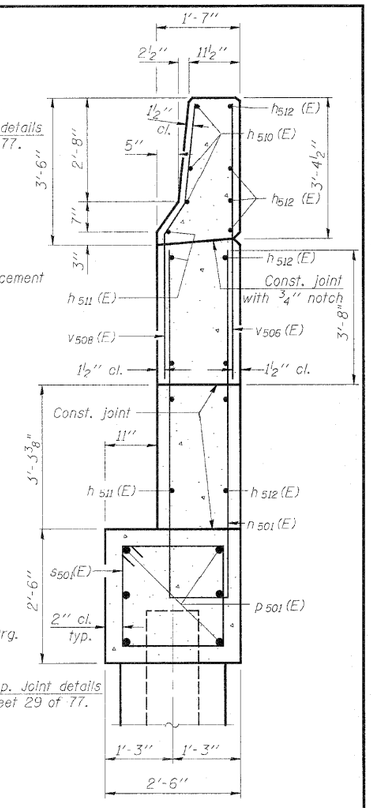

SECTION J-J

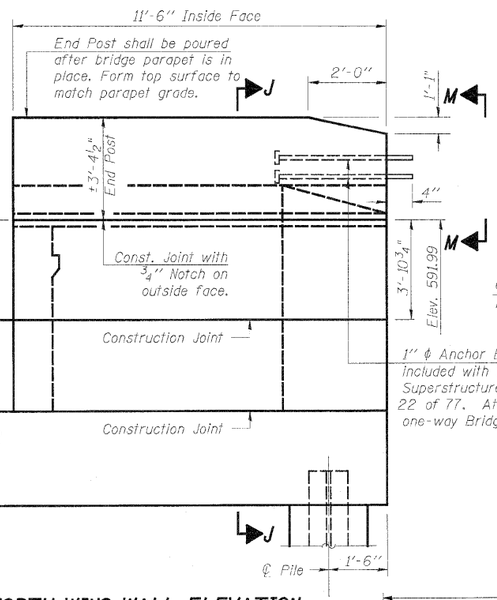

NORTH WING WALL ELEVATION
Showing Dimensions

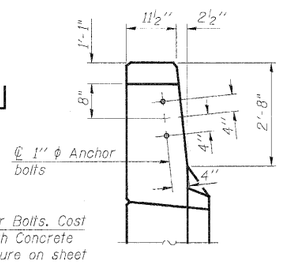

VIEW M-M

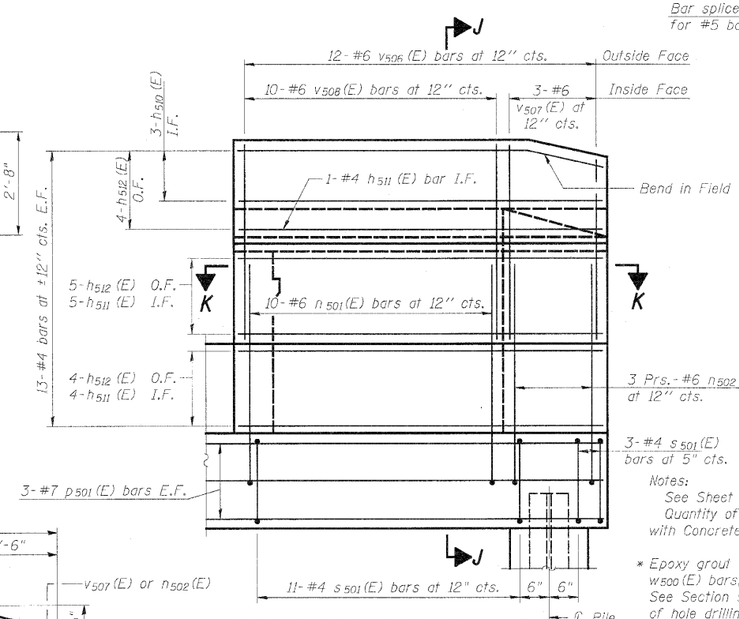

NORTH WING WALL ELEVATION
Showing Reinforcement

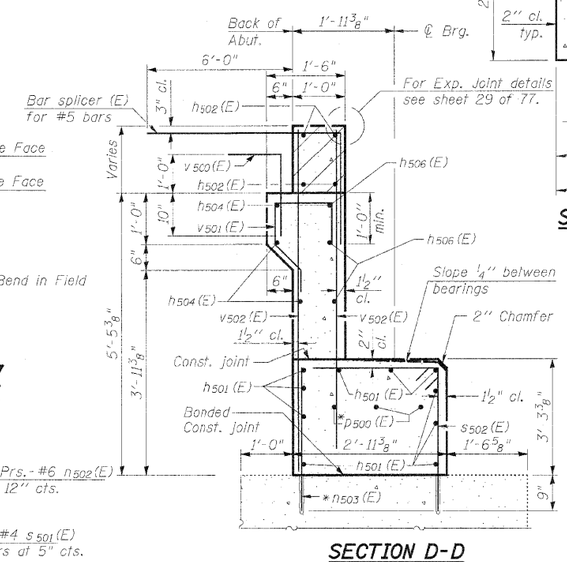

SECTION D-D

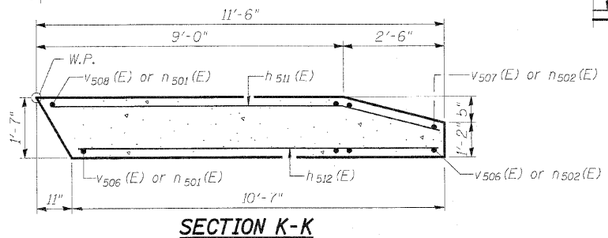

SECTION K-K

Notes:
See Sheet 43 of 77 for Bill of Material.
Quantity of concrete in end post included with Concrete Superstructure on sheet 22 of 77.

* Epoxy grout n503(E), p500(E), s502(E), v503(E), w500(E) bars, and bar splicer in 9" (min.) drilled holes. See Section 584 of the Standard Specifications. Cost of hole drilling and epoxy grouting are included with "Reinforcement Bars, Epoxy Coated".

E.F. = Each Face
I.F. = Inside Face
O.F. = Outside Face

ABUTMENT A FOOTING WIDENING AND NORTH WING WALL
STRUCTURE NO. 081-0024 (W.B.)
STRUCTURE NO. 081-0025 (E.B.)

DESIGNED	LAN
CHECKED	MMB
DRAWN	LAN
CHECKED	MMB

INFRASTRUCTURE ENGINEERING | INCORPORATED
33 West Monroe | Suite 1540 | Chicago, IL 60603
P 312.425.9560 | F 312.425.9564 | www.infrastructure-eng.com

SHEET NO. 42	F.A.I. RTE.	SECTION	COUNTY	TOTAL SHEETS	SHEET NO.
77 SHEETS	280	81-1(VB-1)R	ROCK ISLAND	503	378
			CONTRACT NO. 64815		
	FED. ROAD DIST. NO. _	ILLINOIS	FED. AID PROJECT		

STATE OF ILLINOIS
DEPARTMENT OF TRANSPORTATION

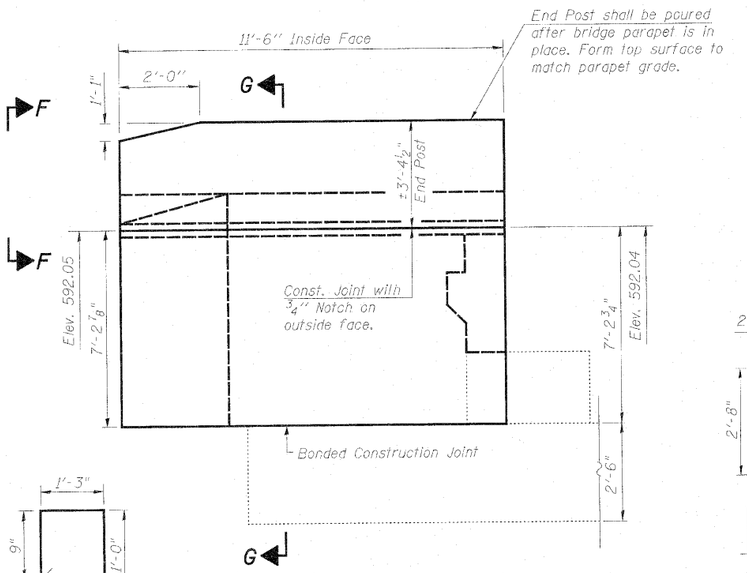

SOUTH WING WALL ELEVATION
Showing Dimensions

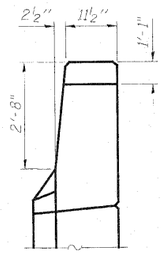

VIEW F-F

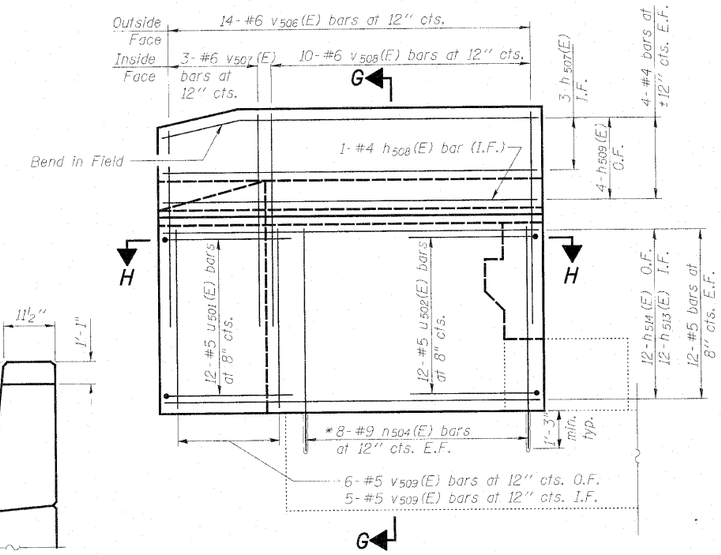

SOUTH WING WALL ELEVATION
Showing Reinforcement

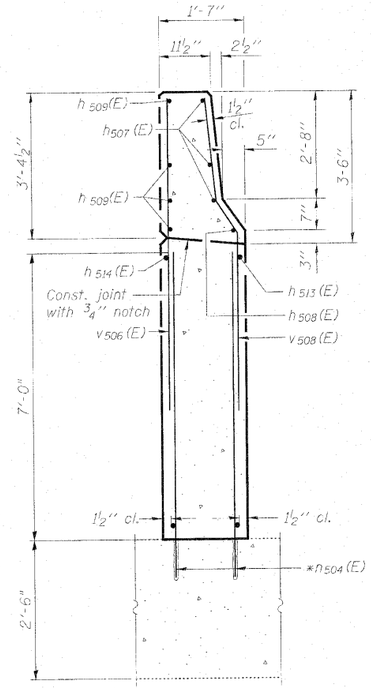

SECTION G-G

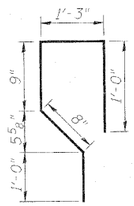

BAR v501(E)

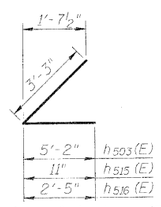

BARS h503(E), h515(E), & h516(E)

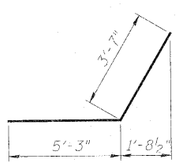

BAR h505(E)

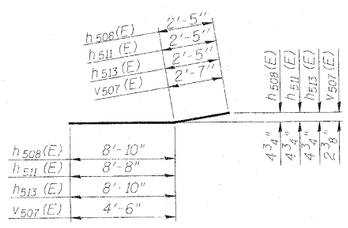

BARS h508(E), h511(E), h513(E), and v507(E)

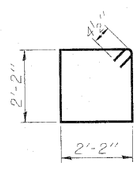

BAR s501(E)

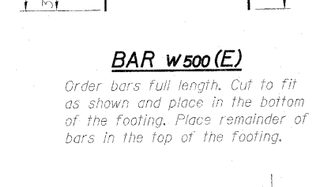

BAR w500(E)

Order bars full length. Cut to fit as shown and place in the bottom of the footing. Place remainder of bars in the top of the footing.

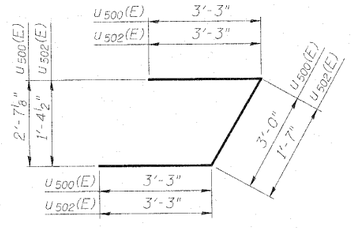

BARS u500(E) and u502(E)

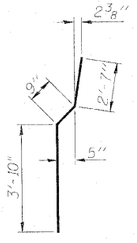

BAR v508(E)

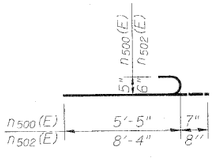

BARS n500(E) and n502(E)

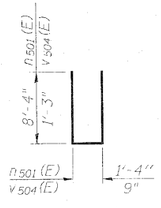

BARS n501(E) and v504(E)

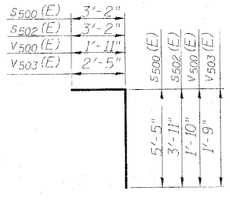

BARS s500(E), s502(E), v500(E), and v503(E)

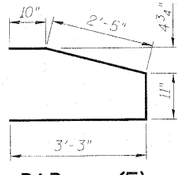

BAR u501(E)

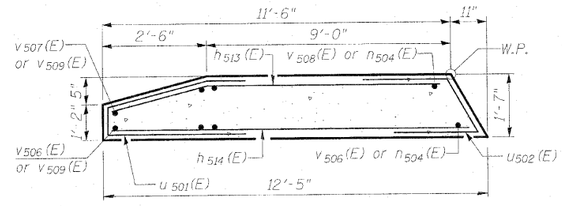

SECTION H-H

Notes:
Quantity of concrete in end post included with Concrete Superstructure on sheet 22 of 77.
For details of Bar Splicers, see sheet 71 of 77.

*Epoxy grout n504(E) bars in 1'-3" (min.) drilled holes. See Section 584 of the Standard Specifications. Cost of hole drilling and epoxy grouting are included with "Reinforcement Bars, Epoxy Coated".

E.F. = Each Face
I.F. = Inside Face
O.F. = Outside Face

BILL OF MATERIAL

Bar	No.	Size	Length	Shape
h500(E)	7	#5	4'-11"	
h501(E)	9	#5	5'-3"	
h502(E)	4	#6	45'-11"	
h503(E)	12	#5	8'-5"	
h504(E)	4	#4	8'-8"	
h505(E)	10	#5	8' 10"	
h506(E)	4	#5	8'-0"	
h507(E)	3	#4	11'-10"	
h508(E)	1	#4	11'-3"	
h509(E)	4	#4	12'-0"	
h510(E)	3	#4	10'-11"	
h511(E)	10	#4	11'-1"	
h512(E)	13	#4	10'-4"	
h513(E)	12	#5	11'-3"	
h514(E)	12	#5	12'-0"	
h515(E)	3	#5	4'-2"	
h516(E)	3	#5	5'-8"	
n500(E)	6	#5	6'-0"	
n501(E)	10	#6	18'-0"	
n502(E)	6	#6	9'-0"	
n503(E)	2	#5	3'-11"	
n504(E)	16	#9	7'-9"	
p500(E)	3	#7	7'-0"	
p501(E)	6	#7	14'-4"	
s500(E)	6	#4	8'-7"	
s501(E)	14	#4	9'-5"	
s502(E)	2	#4	7'-1"	
t500(E)	12	#5	9'-9"	
u500(E)	4	#5	9'-6"	
u501(E)	12	#5	7'-5"	
u502(E)	12	#5	8'-1"	
v500(E)	14	#5	3'-9"	
v501(E)	14	#4	4'-8"	
v502(E)	10	#4	6'-5"	
v503(E)	33	#5	4'-2"	
v504(E)	42	#4	3'-3"	
v506(E)	26	#6	7'-1"	
v507(E)	6	#6	7'-1"	
v508(E)	20	#6	7'-2"	
v509(E)	11	#5	6'-11"	
v500(E)	7	#6	9'-4"	
Pourous Granular Embankment, Special			Cu. Yd.	100
Structure Excavation			Cu. Yd.	125
Concrete Structures			Cu. Yd.	17.7
Reinforcement Bars, Epoxy Coated			Pound	3820
Furnishing Steel Piles, HPBx36			Foot	96
Driving Piles			Foot	96
Pile Shoes			Each	3
Concrete Encasement			Cu. Yd.	0.6
Concrete Sealer			Sq. Ft.	99
Geocomposite Wall Drain			Sq. Yd.	47
Pipe Underdrains for Structures 4"			Foot	46
Bar Splicers			Each	47

ABUTMENT A SOUTH WING WALL
STRUCTURE NO. 081-0024 (W.B.)
STRUCTURE NO. 081-0025 (E.B.)

DESIGNED	LAN
CHECKED	MMB
DRAWN	LAN
CHECKED	MMB

INFRASTRUCTURE ENGINEERING | INCORPORATED
33 West Monroe | Suite 1540 | Chicago, IL 60603
P 312.425.9560 | F 312.425.9564 | www.infrastructure-eng.com

SHEET NO. 43	F.A.I. RTE.	SECTION	COUNTY	TOTAL SHEETS	SHEET NO.
77 SHEETS	280	81-1(VB-1)R	ROCK ISLAND	503	379
			CONTRACT NO. 64815		
	FED. ROAD DIST. NO. _	ILLINOIS	FED. AID PROJECT		

STATE OF ILLINOIS
DEPARTMENT OF TRANSPORTATION

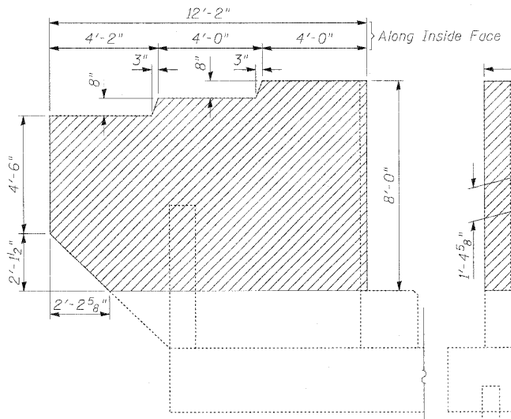

NORTH WINGWALL ELEVATION

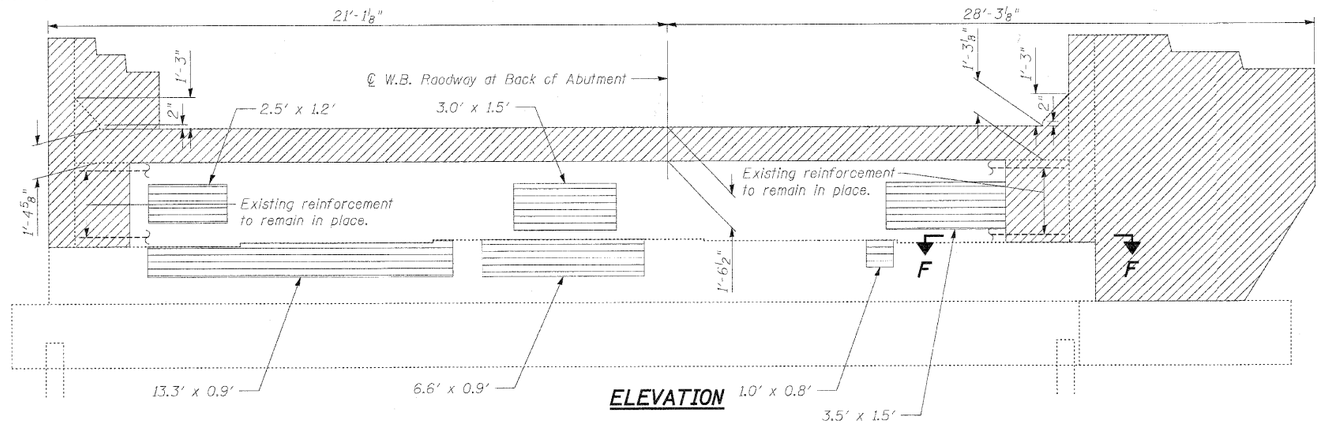

ELEVATION

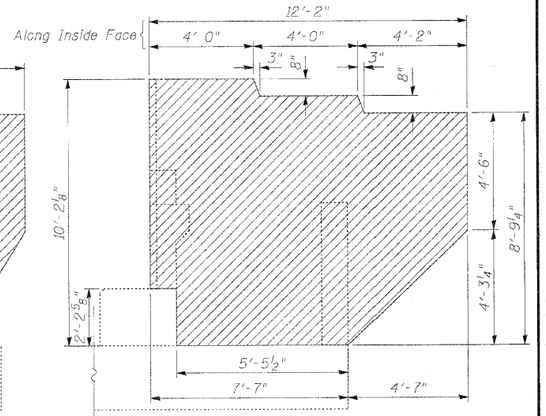

SOUTH WINGWALL ELEVATION

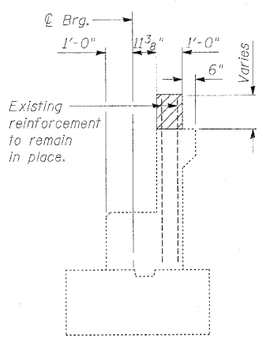

SECTION A-A

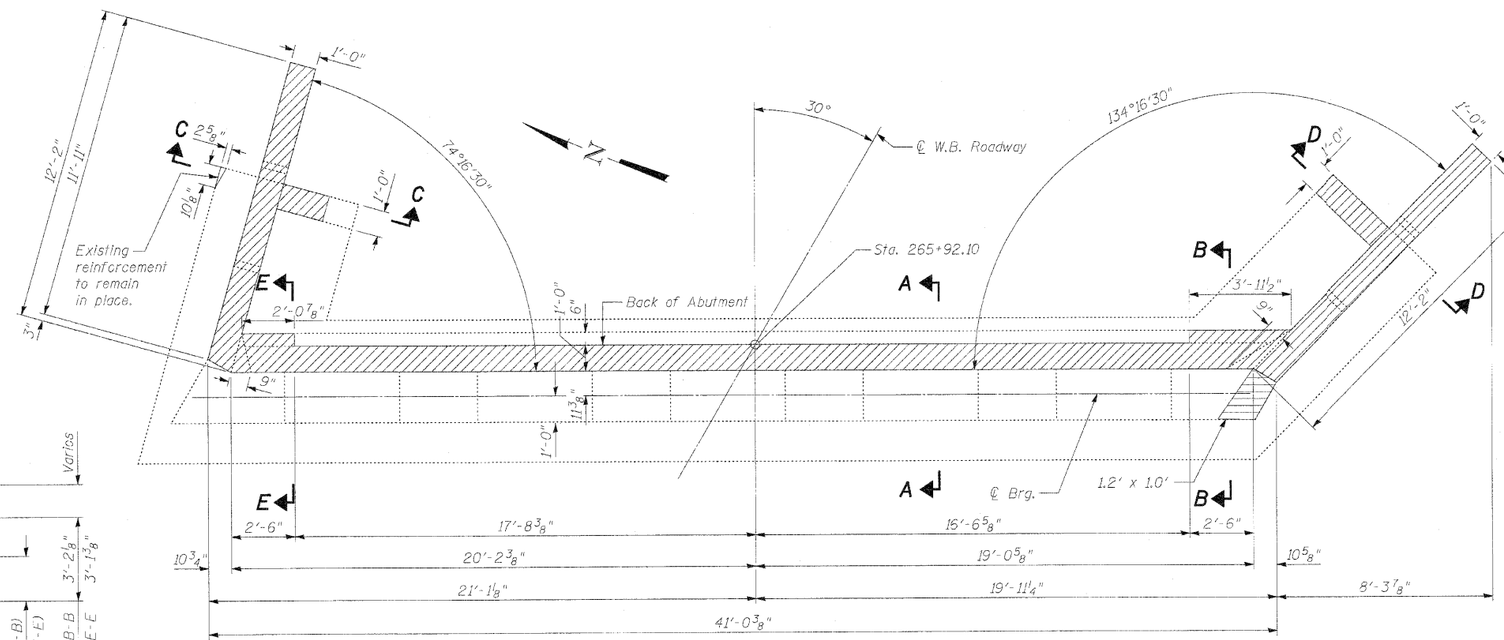

PLAN

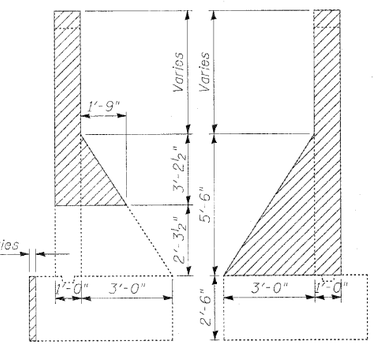

SECTION C-C SECTION D-D

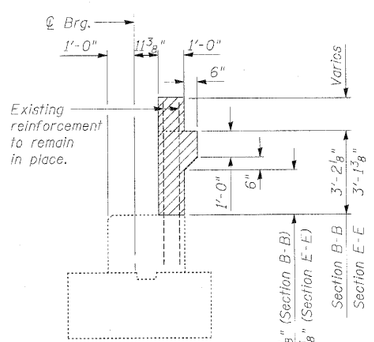

SECTION B-B
SECTION E-E

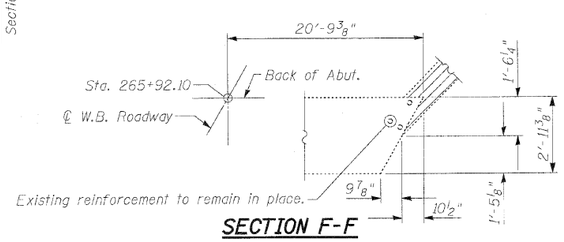

SECTION F-F

Notes:

Existing reinforcement bars not extending into the new construction shall be cut flush with the concrete left in place unless noted otherwise. Cost included with Concrete Removal.

Existing exposed reinforcement indicated to remain in place shall be cleaned and incorporated into the new construction. Cost included with Concrete Removal.

Repair of the existing abutment shall include but not be limited to the areas shown. The actual areas to be repaired will be determined by the Engineer at the time of construction.

Indicates limits of Concrete Removal

Indicates limits of Structural Repair of Concrete (Depth Equal to or Less Than 5 Inches)

BILL OF MATERIAL

Item	Unit	Total
Concrete Removal	Cu. Yd.	10.4
Structural Repair of Concrete (Depth Equal to or Less Than 5 Inches)	Sq. Ft.	34

ABUTMENT B CONCRETE REMOVAL & REPAIRS
STRUCTURE NO. 081-0024 (W.B.)
STRUCTURE NO. 081-0025 (E.B.)

DESIGNED	LAN
CHECKED	SPK
DRAWN	ASJ
CHECKED	SPK

INFRASTRUCTURE ENGINEERING | INCORPORATED
33 West Monroe | Suite 1540 | Chicago, IL 60603
P 312.425.9560 | F 312.425.9564 | www.infrastructure-eng.com

SHEET NO. 44	F.A.I. RTE.	SECTION	COUNTY	TOTAL SHEETS	SHEET NO.
77 SHEETS	280	81-1(VB-1)R	ROCK ISLAND	503	380
			CONTRACT NO. 64815		
	FED. ROAD DIST. NO. _	ILLINOIS	FED. AID PROJECT		

STATE OF ILLINOIS
DEPARTMENT OF TRANSPORTATION

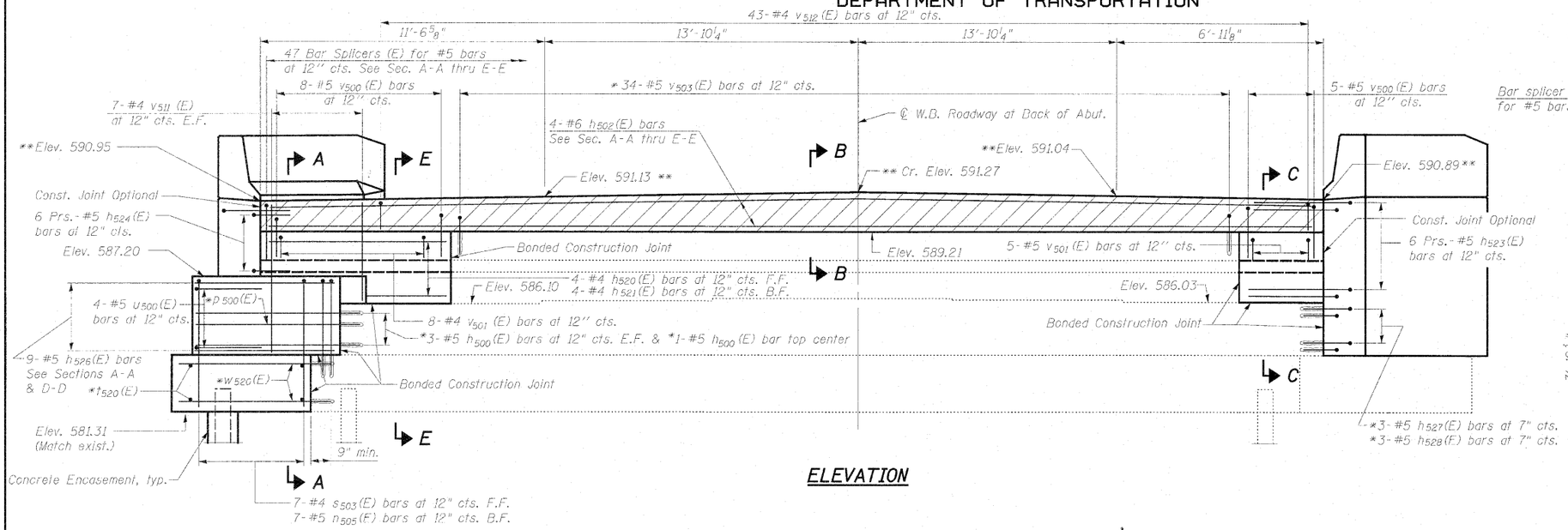

ELEVATION

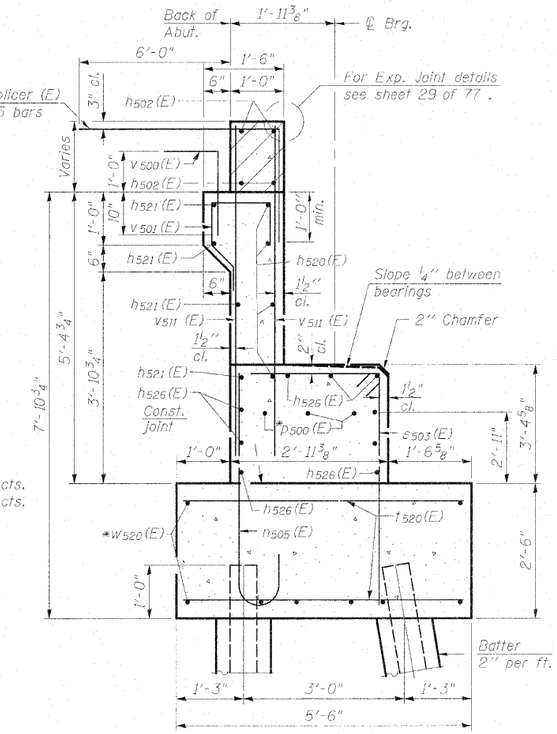

SECTION A-A

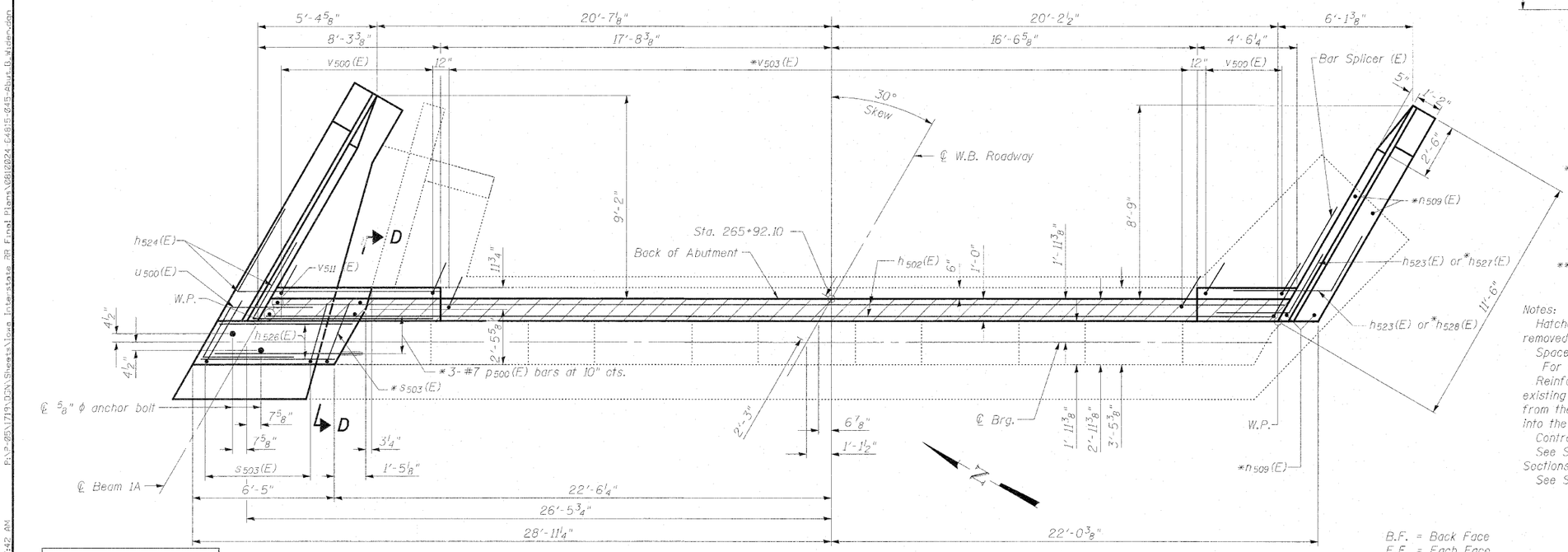

TOP VIEW

B.F. = Back Face
E.F. = Each Face
F.F. = Front Face

* Epoxy grout h500(E), h527(E), h528(E), n508(E), n509(E), p500(E), s503(E), v503(E), and w520(E) bars in 9" (min.) drilled holes. See Section 584 of the Standard Specifications. Cost of hole drilling and epoxy grouting are included with "Reinforcement Bars, Epoxy Coated".

** Elevation at Back of Abutment

Notes:

Hatched area to be poured after superstructure false work has been removed. Quantity of concrete included with Concrete Superstructure.

Space reinforcement in cap to miss anchor bolts.

For Concrete Encasement details, see sheet 70 of 77.

Reinforcement bars that are to be grouted into existing concrete shall be spaced at least 6" (unless noted) from the edge of existing concrete and shall be embedded into the existing concrete a minimum of 9".

Contractor shall avoid drilling into existing reinforcement.

See Sheet 46 of 77 for Footing Plan, North Wing Wall, and Sections B-B, C-C, D-D & E-E.

See Sheet 47 of 77 for South Wing Wall and Bill of Materail.

B.F. = Back Face
E.F. = Each Face
F.F. = Front Face

ABUTMENT B WIDENING
STRUCTURE NO. 081-0024 (W.B.)
STRUCTURE NO. 081-0025 (E.B.)

DESIGNED	LAN
CHECKED	MMB
DRAWN	LAN
CHECKED	MMB

INFRASTRUCTURE ENGINEERING | INCORPORATED
33 West Monroe | Suite 1540 | Chicago, IL 60603
P 312.425.9560 | F 312.425.9564 | www.infrastructure-eng.com

SHEET NO. 45	F.A.I. RTE.	SECTION	COUNTY	TOTAL SHEETS	SHEET NO.
77 SHEETS	280	81-1(VB-1)R	ROCK ISLAND	503	381
			CONTRACT NO. 64815		
	FED. ROAD DIST. NO. _	ILLINOIS	FED. AID PROJECT		

STATE OF ILLINOIS
DEPARTMENT OF TRANSPORTATION

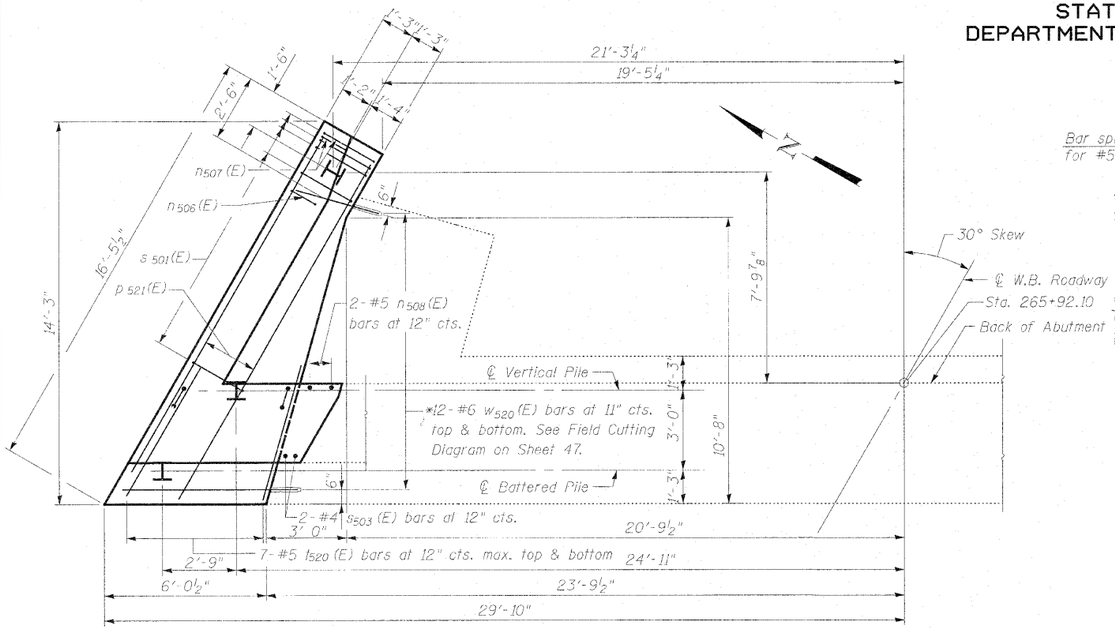

PARTIAL FOOTING PLAN

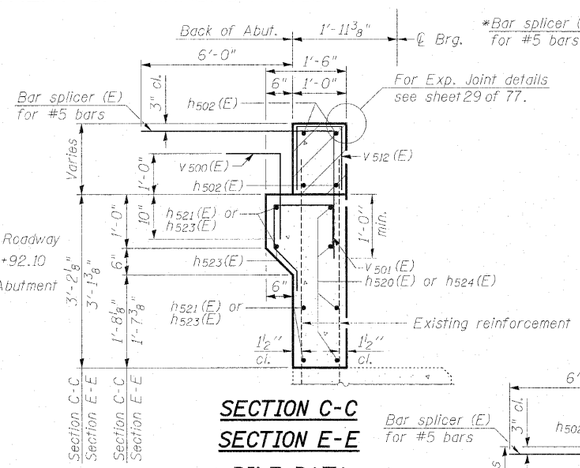

SECTION C-C
SECTION E-E

PILE DATA

Type: HP8x36 with Pile Shoes
Nominal Required Bearing: 286 kips
Allowable Resistance Available: 95 kips
Est. Length: 33'
No. Production Piles: 3
No. Test Piles: 0

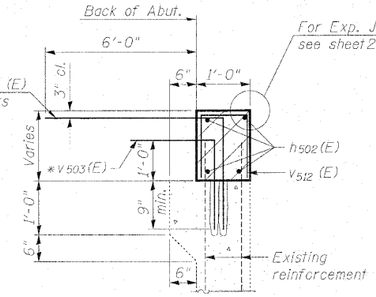

SECTION B-B

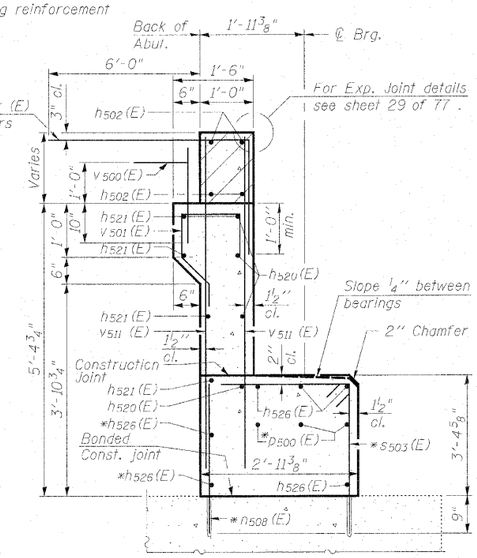

SECTION D-D

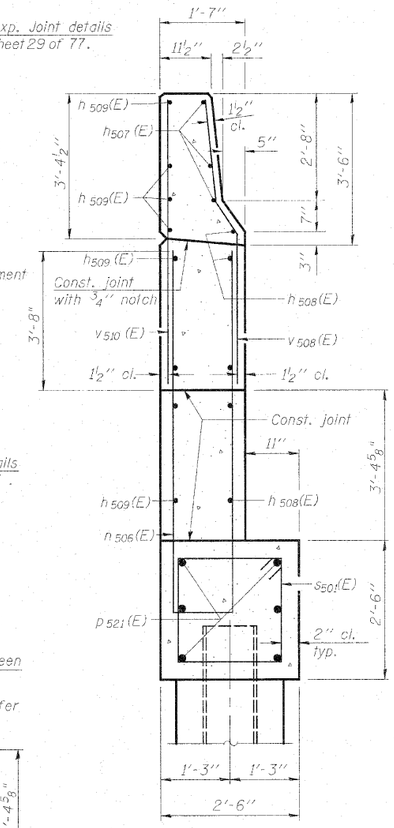

SECTION J-J

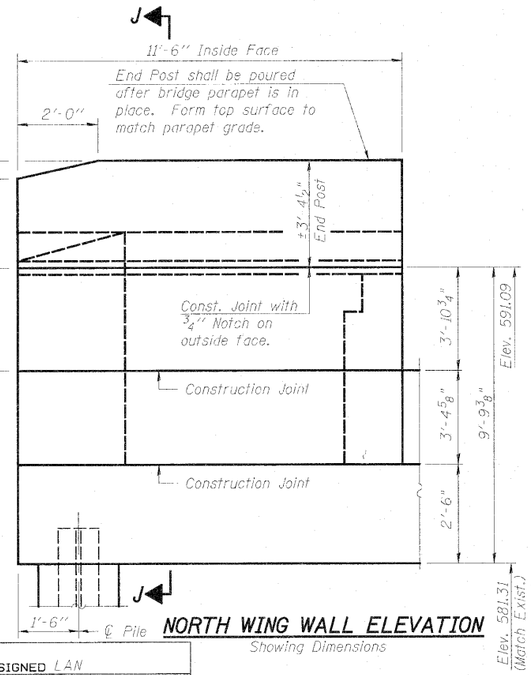

NORTH WING WALL ELEVATION
Showing Dimensions

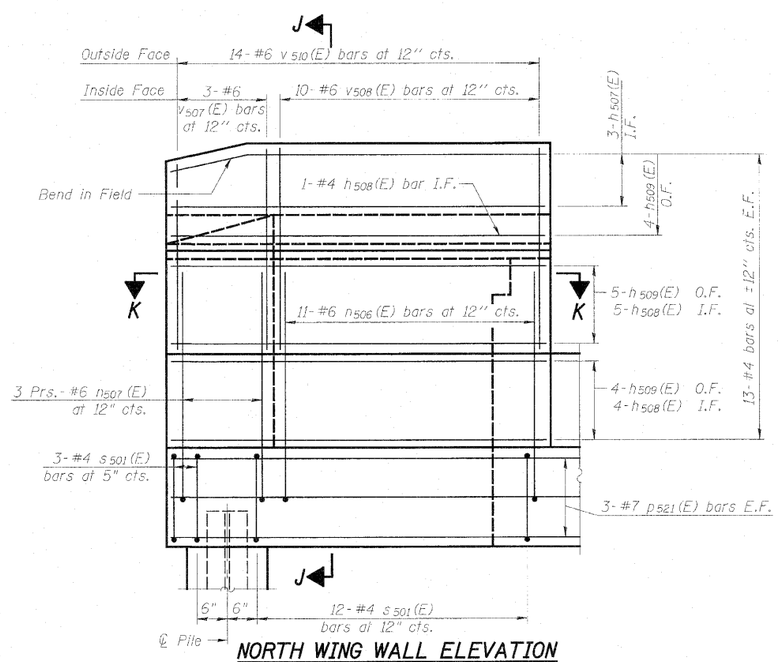

NORTH WING WALL ELEVATION
Showing Reinforcement

E.F. = Each Face
I.F. = Inside Face
O.F. = Outside Face

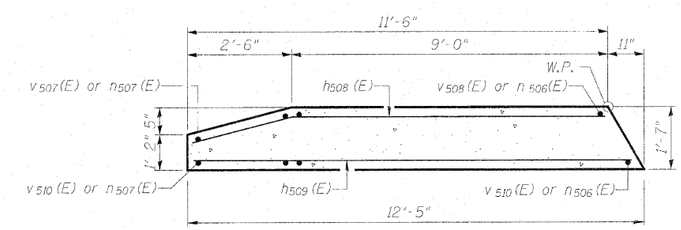

SECTION K-K

Note: See Sheet 47 of 77 for Bill of Material.

* Epoxy grout n508 (E), s503 (E), v503 (E), w520 (E) bars and bar splicer in 9" (min.) drilled holes. See Section 584 of the Standard Specifications. Cost of hole drilling and epoxy grouting are included with "Reinforcement Bars, Epoxy Coated".

Quantity of concrete in end post included with Concrete Superstructure on Sheet 22 of 77.

ABUTMENT B FOOTING WIDENING
AND NORTH WING WALL
STRUCTURE NO. 081-0024 (W.B.)
STRUCTURE NO. 081-0025 (E.B.)

DESIGNED	LAN
CHECKED	MMB
DRAWN	LAN
CHECKED	MMB

INFRASTRUCTURE ENGINEERING | INCORPORATED
33 West Monroe | Suite 1540 | Chicago, IL 60603
P 312.425.9560 | F 312.425.9564 | www.infrastructure-eng.com

SHEET NO. 46	F.A.I. RTE.	SECTION	COUNTY	TOTAL SHEETS	SHEET NO.
77 SHEETS	280	81-1(VB-1)R	ROCK ISLAND	503	382
			CONTRACT NO. 64815		
	FED. ROAD DIST. NO. _	ILLINOIS	FED. AID PROJECT		

STATE OF ILLINOIS
DEPARTMENT OF TRANSPORTATION

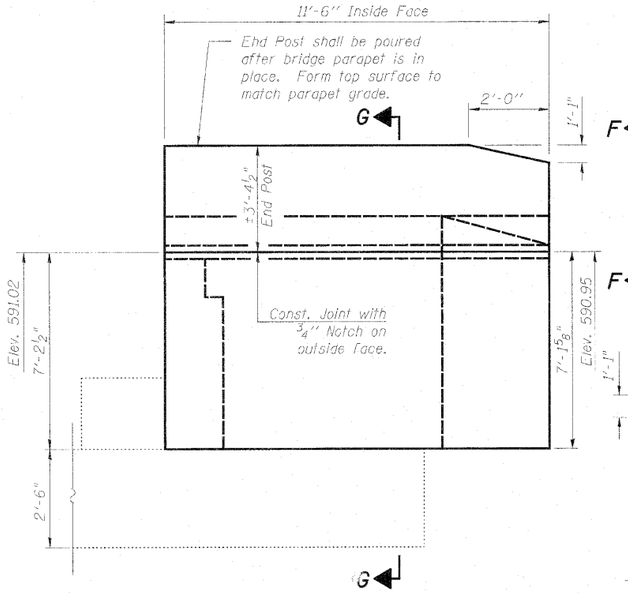

SOUTH WING WALL ELEVATION
Showing Dimensions

VIEW F-F

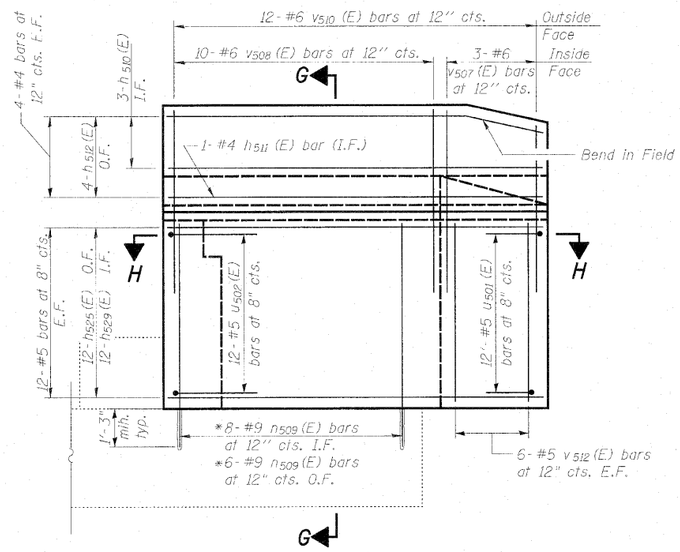

SOUTH WING WALL ELEVATION
Showing Reinforcement

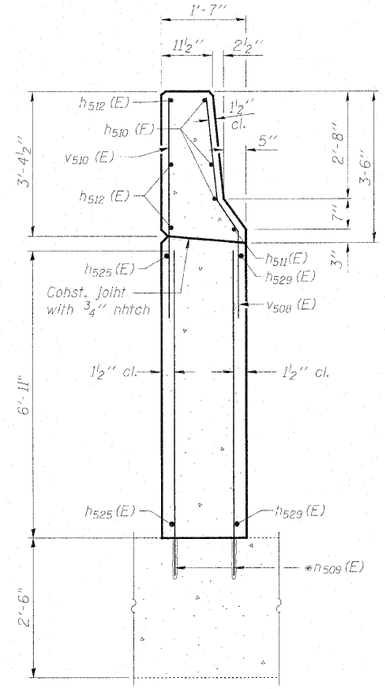

SECTION G-G

BILL OF MATERIAL

Bar	No.	Size	Length	Shape
n500 (E)	7	#5	4'-11"	
n502 (E)	4	#6	45'-11"	
n507 (E)	3	#4	11'-10"	
n508 (E)	10	#4	11'-3"	
n509 (E)	13	#4	12'-0"	
n510 (E)	3	#4	10'-11"	
n511 (E)	1	#4	11'-1"	
n512 (E)	4	#4	10'-4"	
n520 (E)	4	#4	8'-0"	
n521 (E)	4	#4	7'-2"	
n523 (E)	12	#5	9'-8"	
n524 (E)	12	#5	8'-5"	
n525 (E)	12	#5	10'-3"	
n526 (E)	9	#5	6'-1"	
n527 (E)	3	#5	4'-3"	
n528 (E)	3	#5	5'-5"	
n529 (E)	12	#5	11'-3"	
n505 (E)	7	#5	6'-1"	
n506 (E)	11	#6	18'-4"	
n507 (E)	6	#6	9'-2"	
n508 (E)	2	#5	4'-0"	
n509 (E)	14	#9	8'-3"	
p500 (E)	3	#7	7'-0"	
p521 (E)	6	#7	14'-9"	
s501 (E)	15	#4	9'-5"	
s503 (E)	2	#4	7'-0"	
s504 (E)	7	#4	8'-6"	
t520 (E)	14	#5	11'-8"	
u500 (E)	4	#5	9'-6"	
u501 (E)	12	#5	7'-5"	
u502 (E)	12	#5	8'-1"	
v500 (E)	13	#5	3'-9"	
v501 (E)	13	#4	4'-8"	
v503 (E)	34	#5	4'-2"	
v507 (E)	6	#6	7'-1"	
v508 (E)	20	#6	7'-2"	
v510 (E)	26	#6	7'-0"	
v511 (E)	14	#4	6'-6"	
v512 (E)	12	#5	7'-0"	
v513 (E)	43	#4	3'-5"	
w520 (E)	12	#6	9'-10"	
Pourous Granular Embankment, Special		Cu. Yd.	100	
Structure Excavation		Cu. Yd.	124	
Concrete Structures		Cu. Yd.	17.7	
Reinforcement Bars, Epoxy Coated		Pound	4,010	
Furnishing Steel Piles, HP8x36		Foot	99	
Driving Piles		Foot	99	
Pile Shoes		Each	3	
Concrete Encasement		Cu. Yd.	0.6	
Concrete Sealer		Sq. Ft.	102	
Geocomposite Wall Drain		Sq. Yd.	47	
Pipe Underdrain for Structures 4"		Foot	46	
Bar Splicers		Each	47	

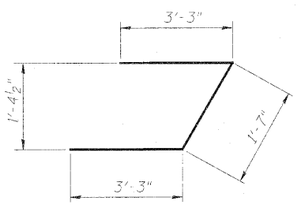

BAR u502(E)

BAR h524(E)

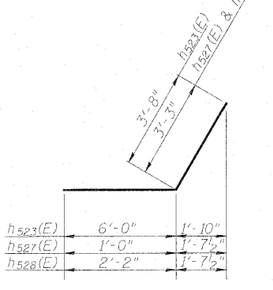

BARS h523(E) h527 (E), & h528(E)

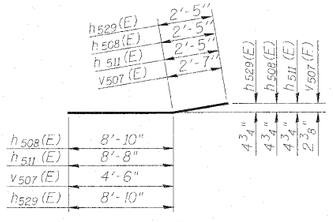

BARS h508 (E), h511 (E), h529(E), & v507(E)

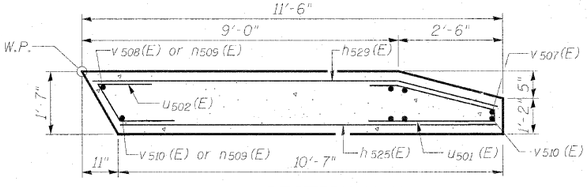

SECTION H-H

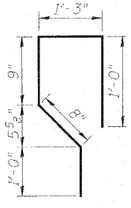

BAR v501 (E)

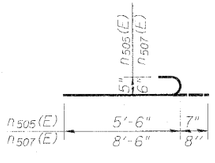

BARS n505(E) & n507(E)

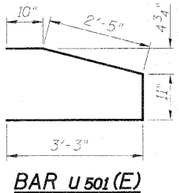

BAR u501(E)

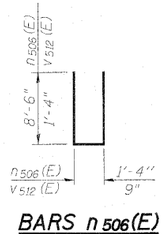

BARS n506(E) and v512 (E)

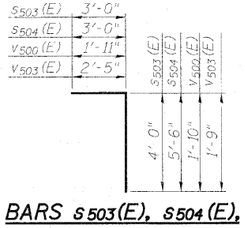

BARS s503(E), s504(E), v500(E), & v503(E)

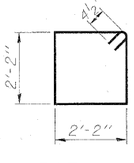

BAR s501 (E)

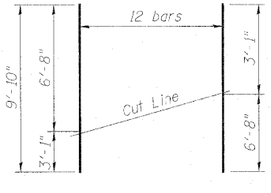

BAR w520 (E)

Order bars full length. Cut to fit as shown and place at the bottom of the footing. Place remainder of bars in the top of the footing.

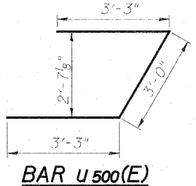

BAR u500(E)

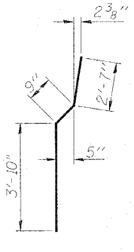

BAR v508 (E)

E.F. = Each Face
I.F. = Inside Face
O.F. = Outside Face

DESIGNED	LAN
CHECKED	MMB
DRAWN	LAN
CHECKED	MMB

* Epoxy grout n509(E) bars in 1'-3" (min.) drilled holes. See Section 584 of the Standard Specifications. Cost of hole drilling and epoxy grouting are included with "Reinforcement Bars, Epoxy Coated".

Notes:
For details of Bar Splicers, see sheet 71 of 77.
Quantity of concrete in end post included with Concrete Superstructure on sheet 22 of 77.

INFRASTRUCTURE ENGINEERING | INCORPORATED
33 West Monroe | Suite 1540 | Chicago, IL 60603
P 312.425.9560 | F 312.425.9564 | www.infrastructure-eng.com

ABUTMENT B SOUTH WINGWALL
STRUCTURE NO. 081-0024 (W.B.)
STRUCTURE NO. 081-0025 (E.B.)

SHEET NO. 47	F.A.I. RTE.	SECTION	COUNTY	TOTAL SHEETS	SHEET NO.
77 SHEETS	280	81-1(VB-1)R	ROCK ISLAND	503	383
			CONTRACT NO. 64815		
	FED. ROAD DIST. NO. _	ILLINOIS	FED. AID PROJECT		

STATE OF ILLINOIS
DEPARTMENT OF TRANSPORTATION

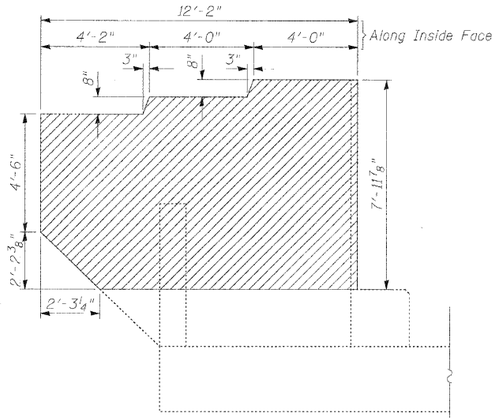

SOUTH WINGWALL ELEVATION

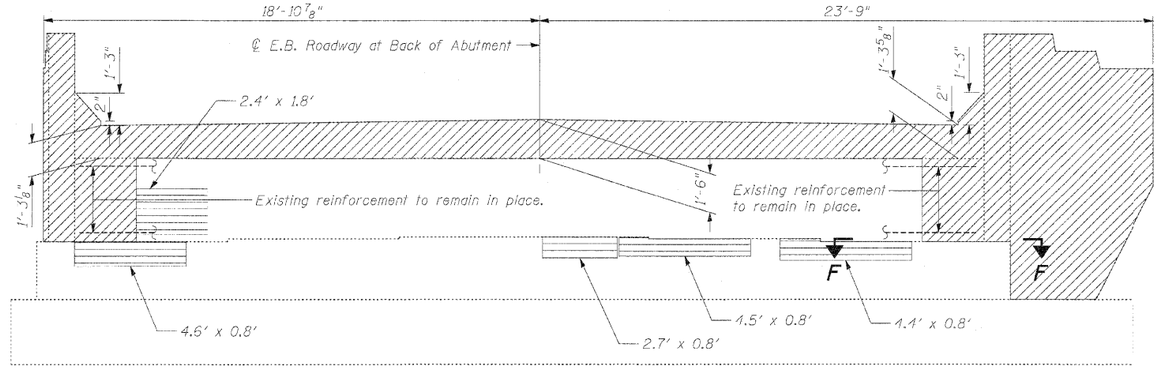

ELEVATION

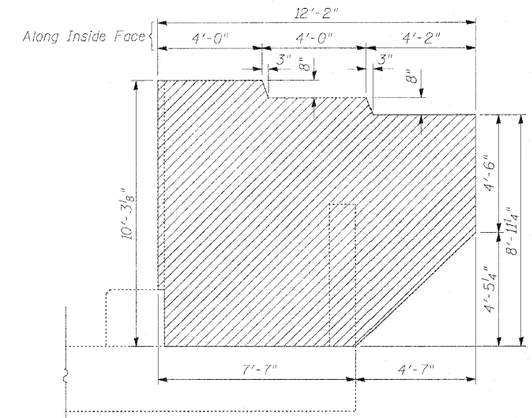

NORTH WINGWALL ELEVATION

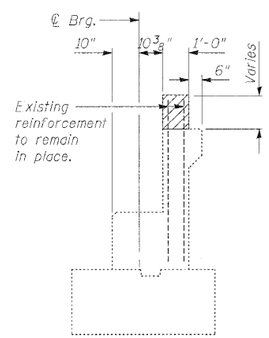

SECTION A-A

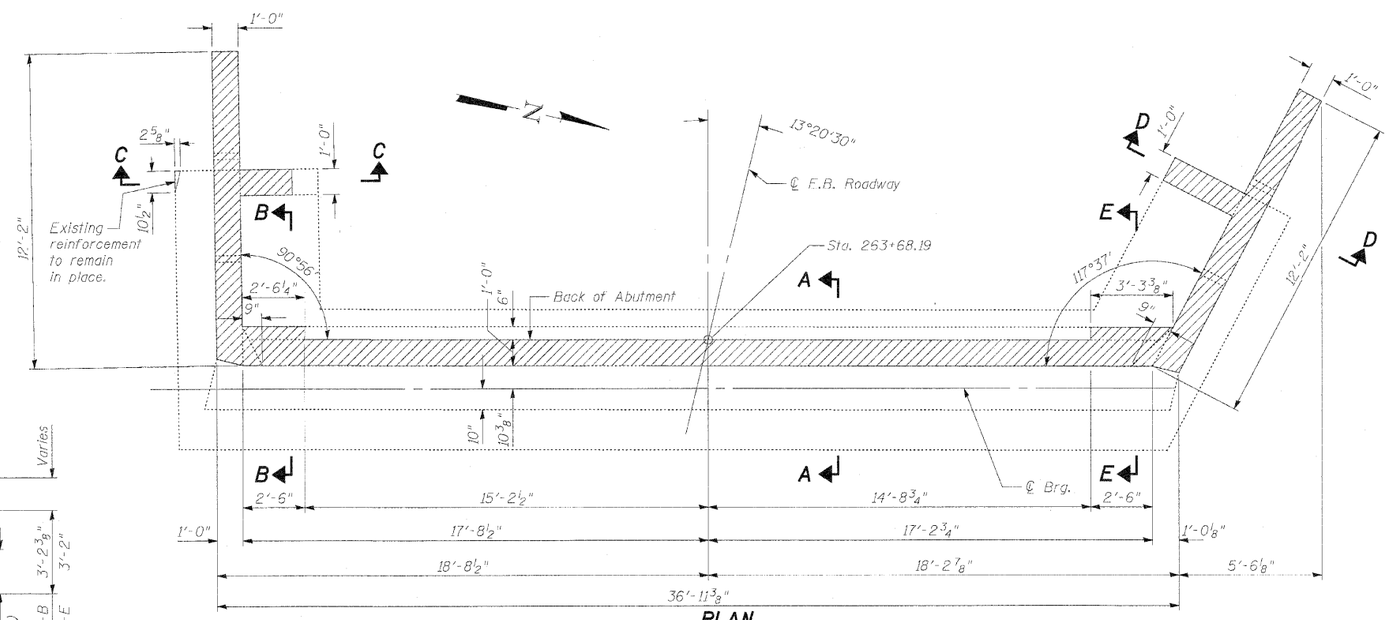

PLAN

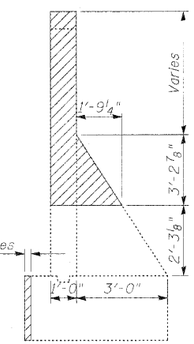

SECTION C-C

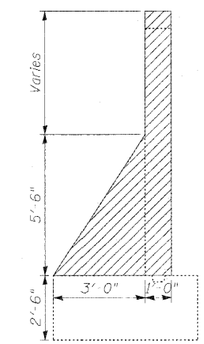

SECTION D-D

Notes:

Existing reinforcement bars not extending into the new construction shall be cut flush with the concrete left in place unless noted otherwise. Cost included with Concrete Removal.

Existing exposed reinforcement indicated to remain in place shall be cleaned and incorporated into the new construction. Cost included with Concrete Removal.

Repair of the existing abutment shall include but not be limited to the areas shown. The actual areas to be repaired will be determined by the Engineer at the time of construction.

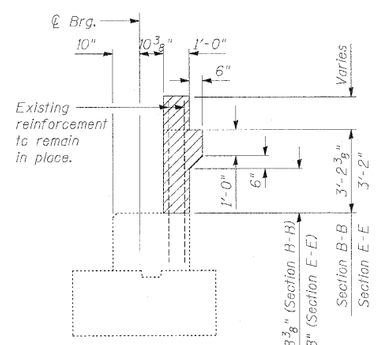

SECTION B-B
SECTION E-E

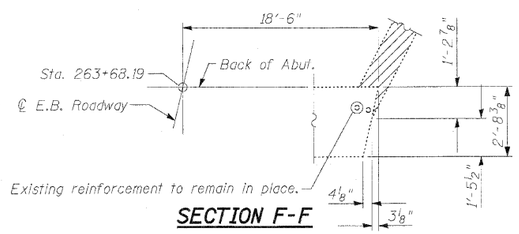

SECTION F-F

Indicates limits of Concrete Removal

Indicates limits of Structural Repair of Concrete (Depth Equal to or Less Than 5 Inches)

BILL OF MATERIAL

Item	Unit	Total
Concrete Removal	Cu. Yd.	10.2
Structural Repair of Concrete (Depth Equal to or Less Than 5 Inches)	Sq. Ft.	17

ABUTMENT C CONCRETE REMOVAL & REPAIRS
STRUCTURE NO. 081-0024 (W.B.)
STRUCTURE NO. 081-0025 (E.B.)

DESIGNED	LAN
CHECKED	SPK
DRAWN	ASJ
CHECKED	SPK

INFRASTRUCTURE ENGINEERING | INCORPORATED
33 West Monroe | Suite 1540 | Chicago, IL 60603
P 312.425.9560 | F 312.425.9564 | www.infrastructure-eng.com

SHEET NO. 48	F.A.I. RTE.	SECTION	COUNTY	TOTAL SHEETS	SHEET NO.
77 SHEETS	280	81-1(VB-1)R	ROCK ISLAND	503	384
			CONTRACT NO. 64815		
	FED. ROAD DIST. NO. _	ILLINOIS	FED. AID PROJECT		

STATE OF ILLINOIS
DEPARTMENT OF TRANSPORTATION

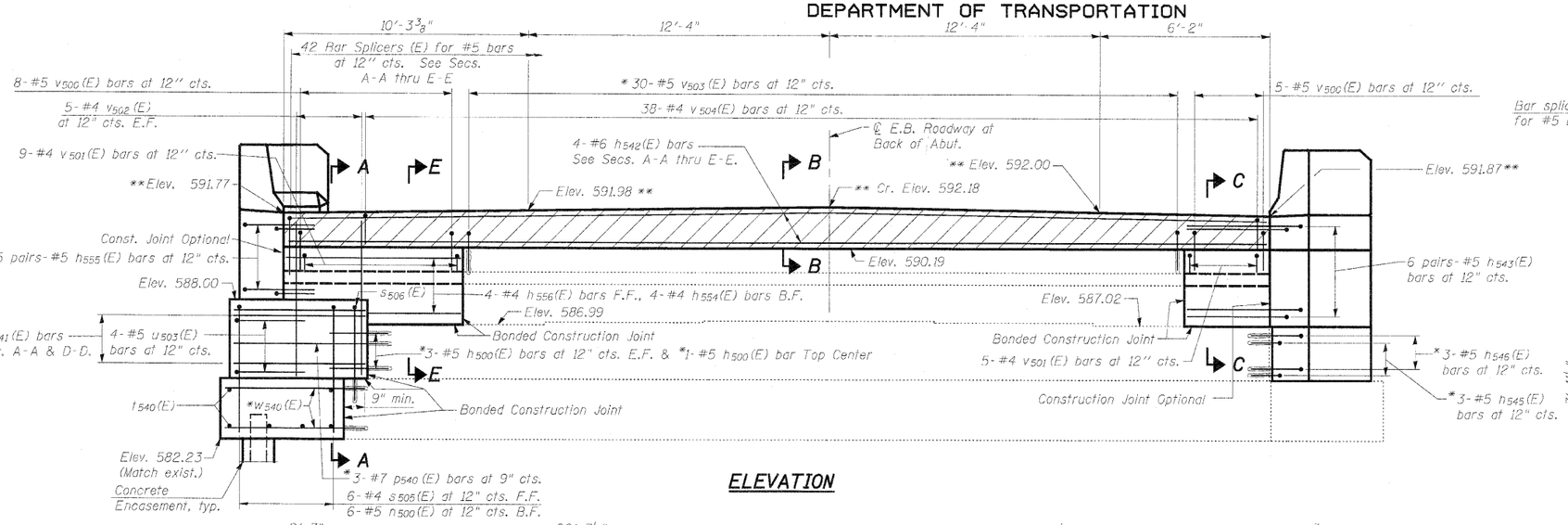

ELEVATION

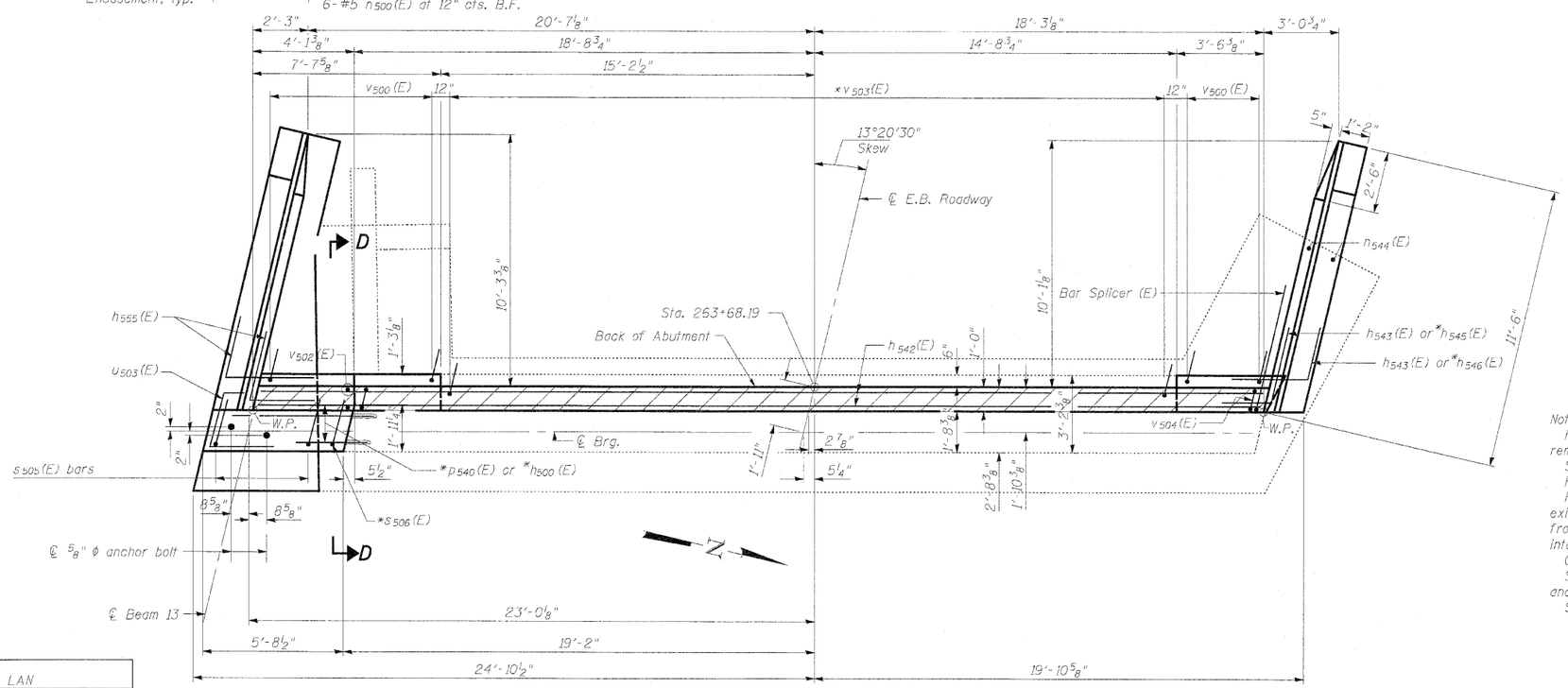

TOP VIEW

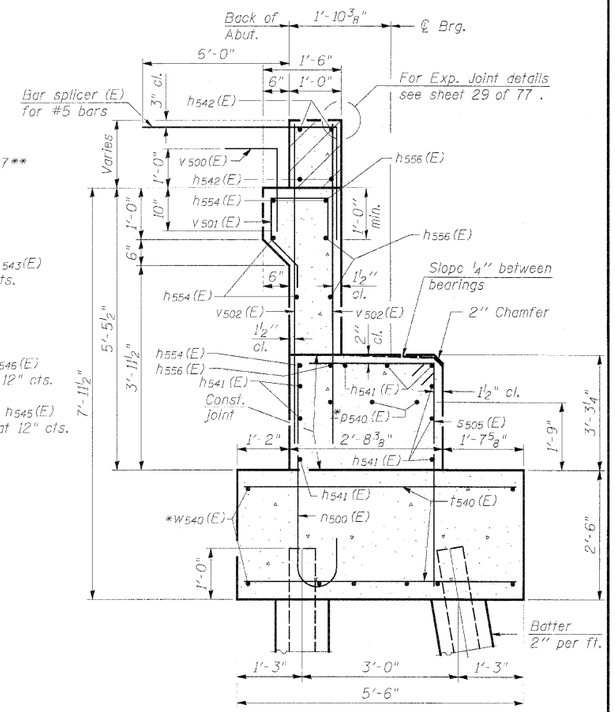

SECTION A-A

* Epoxy grout h500(E), h545(E), h546(E), p540(E), s506(E), v503(E), and w540(E) bars in 9" (min.) drilled holes. See Section 584 of the Standard Specifications. Cost of hole drilling and epoxy grouting are included with "Reinforcement Bars, Epoxy Coated".

** Elevation at Back of Abutment
B.F. = Back Face
E.F. = Each Face
F.F. = Front Face

Notes:
Hatched area to be poured after superstructure false work has been removed. Quantity of concrete included with Concrete Superstructure.
Space reinforcement in cap to miss anchor bolts.
For Concrete Encasement details, see sheet 70 of 77.
Reinforcement bars that are to be grouted into existing concrete shall be spaced at least 6" (unless noted) from the edge of existing concrete and shall be embedded into the existing concrete a minimum of 9".
Contractor shall avoid drilling into existing reinforcement.
See Sheet 50 of 77 for Footing Plan, South Wing Wall, and Secs. B-B, C-C, D-D, & E-E.
See Sheet 51 of 77 for North Wing Wall and Bill of Material.

ABUTMENT C WIDENING
STRUCTURE NO. 081-0024 (W.B.)
STRUCTURE NO. 081-0025 (E.B.)

DESIGNED	LAN
CHECKED	MMB
DRAWN	LAN
CHECKED	MMB

INFRASTRUCTURE ENGINEERING INCORPORATED
33 West Monroe | Suite 1540 | Chicago, IL 60603
P 312.425.9560 | F 312.425.9564 | www.infrastructure-eng.com

SHEET NO. 49	F.A.I. RTE.	SECTION	COUNTY	TOTAL SHEETS	SHEET NO.
77 SHEETS	280	81-1(VB-1)R	ROCK ISLAND	503	385
			CONTRACT NO. 64815		
	FED. ROAD DIST. NO. _	ILLINOIS	FED. AID PROJECT		

STATE OF ILLINOIS
DEPARTMENT OF TRANSPORTATION

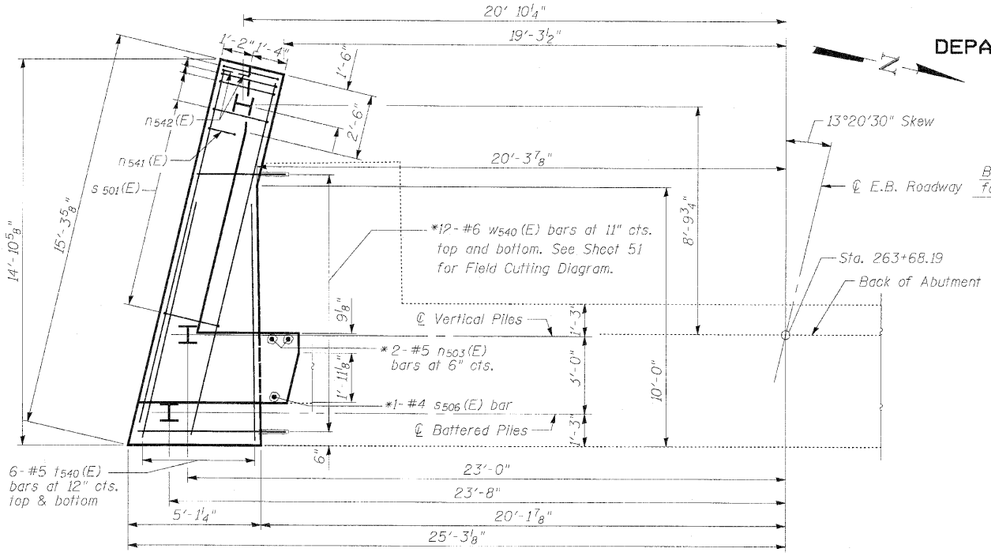

PARTIAL FOOTING PLAN

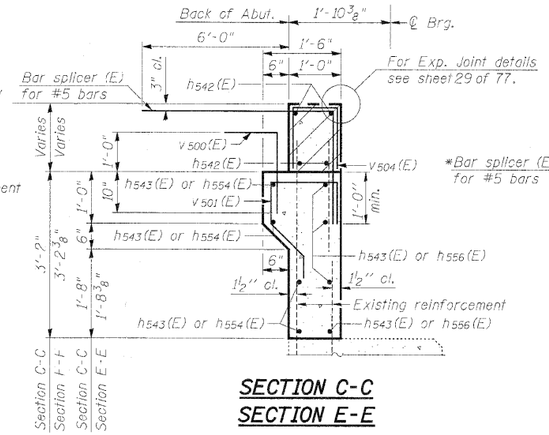

SECTION C-C
SECTION E-E

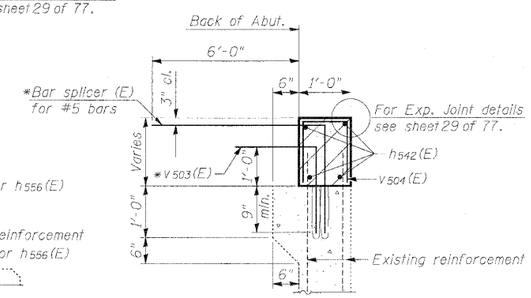

SECTION B-B

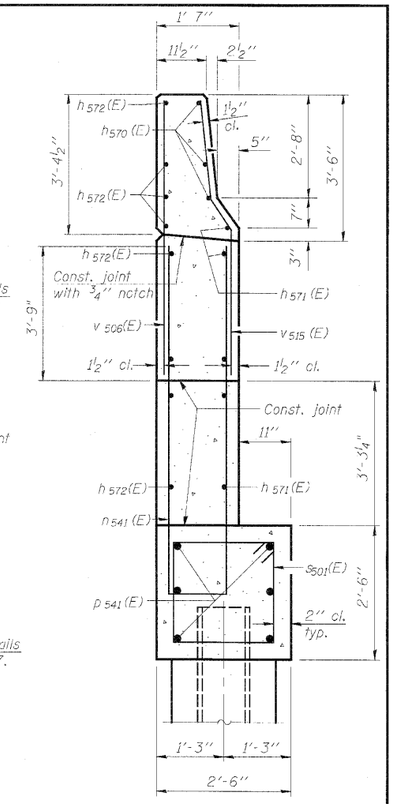

SECTION J-J

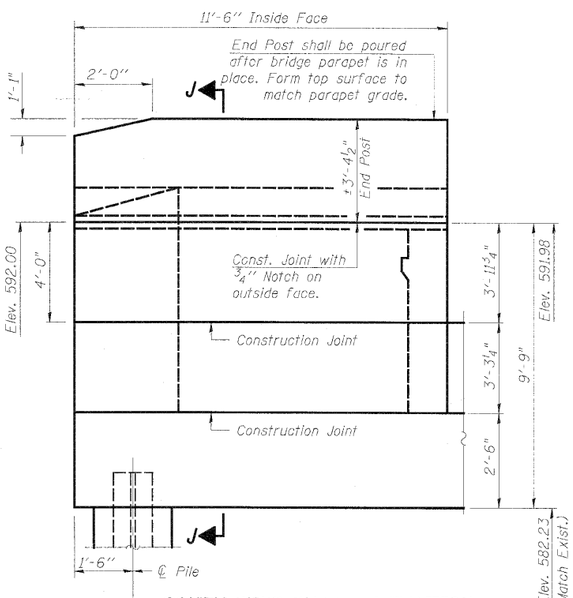

SOUTH WING WALL ELEVATION
Showing Dimensions

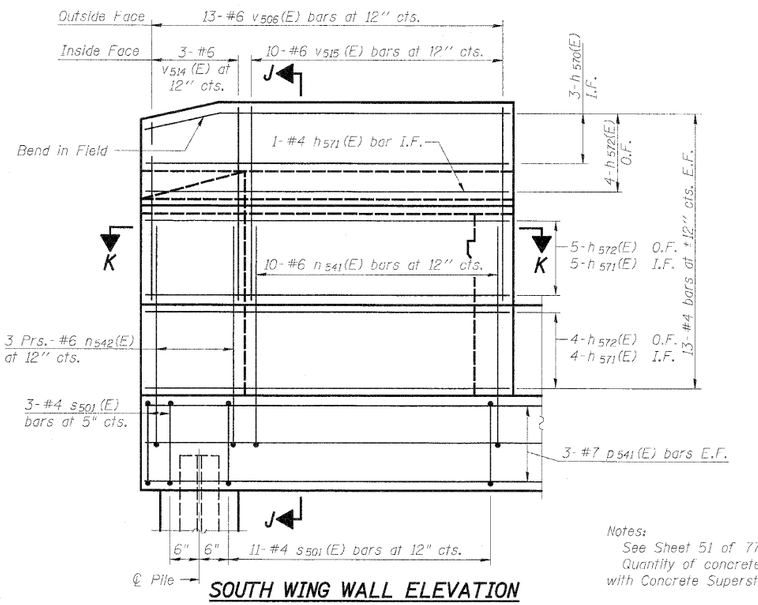

SOUTH WING WALL ELEVATION
Showing Reinforcement

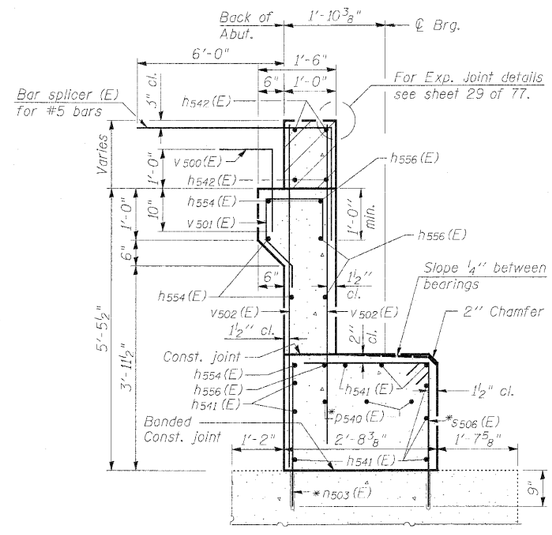

SECTION D-D

PILE DATA

Type: HP8x36 with Pile Shoes
Nominal Required Bearing: 286 kips
Allowable Resistance Available: 95 kips
Est. Length: 37'
No. Production Piles: 3
No. Test Piles: 0

Notes:
See Sheet 51 of 77 for Bill of Material.
Quantity of concrete in end post included with Concrete Superstructure on sheet 22 of 77.

* Epoxy grout n503(E), p540(E), s506(E), v503(E), w540(E) bars, and bar splicer in 9" (min.) drilled holes. See Section 584 of the Standard Specifications. Cost of hole drilling and epoxy grouting are included with "Reinforcement Bars, Epoxy Coated".

E.F. = Each Face
I.F. = Inside Face
O.F. = Outside Face

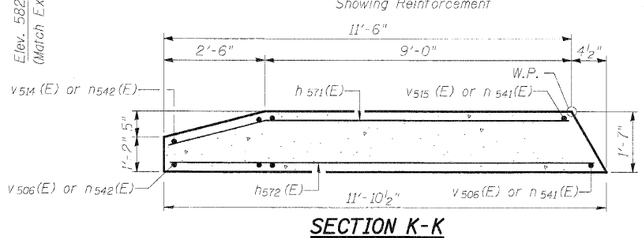

SECTION K-K

DESIGNED	LAN
CHECKED	MMB
DRAWN	LAN
CHECKED	MMB

INFRASTRUCTURE ENGINEERING INCORPORATED
33 West Monroe | Suite 1540 | Chicago, IL 60603
P 312.425.9560 | F 312.425.9564 | www.infrastructure-eng.com

ABUTMENT C FOOTING WIDENING AND SOUTH WING WALL
STRUCTURE NO. 081-0024 (W.B.)
STRUCTURE NO. 081-0025 (E.B.)

SHEET NO. 50	F.A.I. RTE.	SECTION	COUNTY	TOTAL SHEETS	SHEET NO.
77 SHEETS	280	81-1(VB-1)R	ROCK ISLAND	503	386
			CONTRACT NO. 64815		
	FED. ROAD DIST. NO. _	ILLINOIS	FED. AID PROJECT		

STATE OF ILLINOIS
DEPARTMENT OF TRANSPORTATION

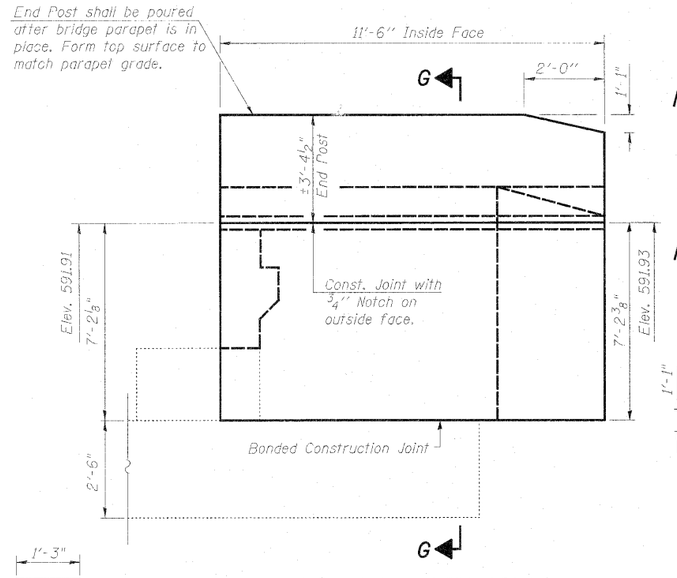

NORTH WING WALL ELEVATION
Showing Dimensions

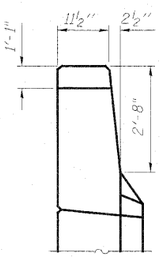

VIEW F-F

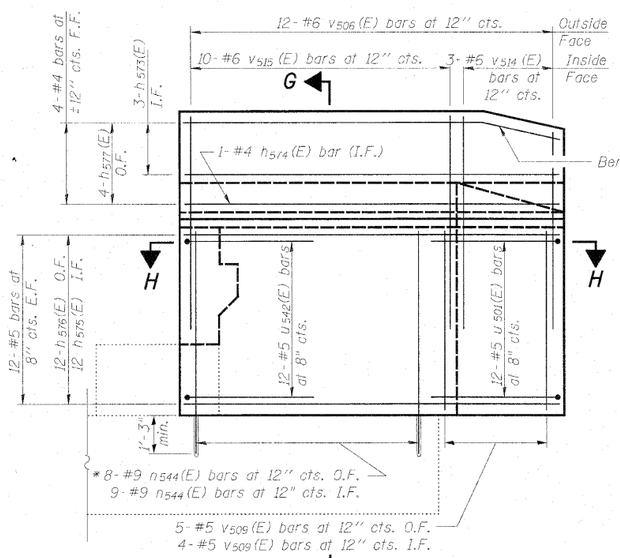

NORTH WING WALL ELEVATION
Showing Reinforcement

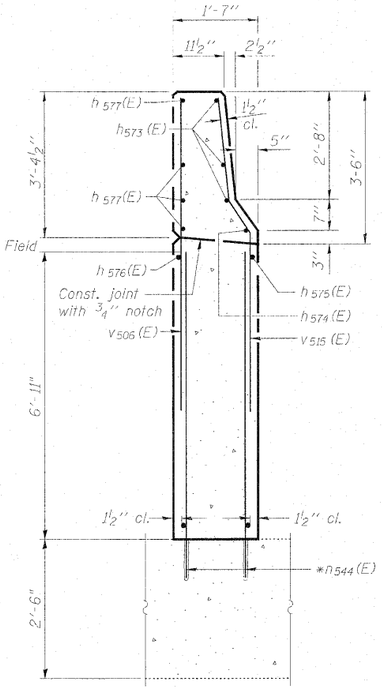

SECTION G-G

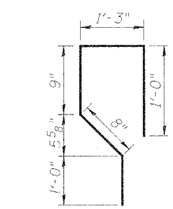

BAR v501 (E)

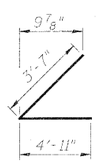

BARS h555 (E)

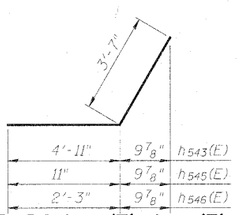

BARS h543 (E), h545 (E), & h546 (E)

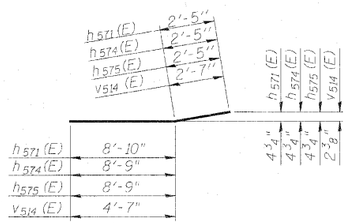

BARS h571 (E), h574 (E), h575 (E), and v514 (E)

SECTION H-H

Notes:
Quantity of concrete in end post included with Concrete Superstructure on sheet 22 of 77.
For details of Bar Splicers, see sheet 71 of 77.

*Epoxy grout n544 (E) bars in 1'-3" (min.) drilled holes. See Section 584 of the Standard Specifications. Cost of hole drilling and epoxy grouting are included with "Reinforcement Bars, Epoxy Coated".

E.F. = Each Face
I.F. = Inside Face
O.F. = Outside Face

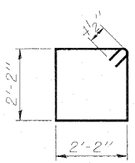

BAR s501 (E)

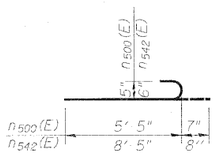

BARS n500 (E) and n542 (E)

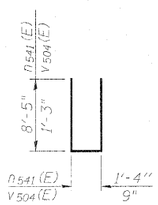

BARS n541 (E) and v504 (E)

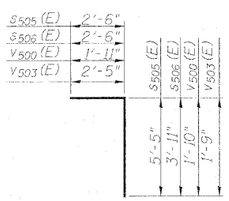

BARS s505 (E), s506 (E), v500 (E), and v503 (E)

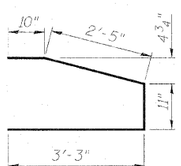

BAR u501 (E)

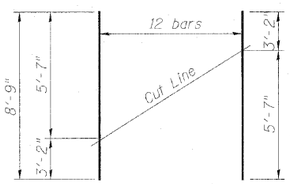

BAR w540 (E)

Order bars full length. Cut to fit as shown and place in the bottom of the footing. Use remainder of bars in the top of the footing.

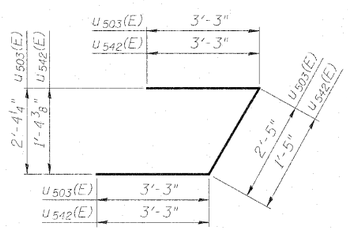

BARS u503 (E) and u542 (E)

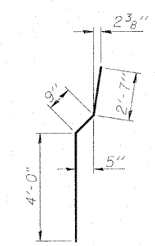

BAR v515 (E)

BILL OF MATERIAL

Bar	No.	Size	Length	Shape
h500 (E)	7	#5	4'-11"	
h541 (E)	9	#5	5'-5"	
h542 (E)	4	#6	40'-10"	
h543 (E)	12	#5	8'-6"	
h545 (E)	3	#5	4'-6"	
h546 (E)	3	#5	5'-10"	
h554 (E)	4	#4	7'-1"	
h555 (E)	10	#5	8'-6"	
h556 (E)	4	#4	7'-4"	
h570 (E)	3	#4	11'-5"	
h571 (E)	10	#4	11'-3"	
h572 (E)	13	#4	11'-7"	
h573 (E)	3	#4	11'-0"	
h574 (E)	1	#4	11'-2"	
h575 (E)	12	#5	11'-2"	
h576 (E)	12	#5	10'-10"	
h577 (E)	4	#4	10'-10"	
n500 (E)	6	#5	6'-0"	
n541 (E)	10	#6	18'-2"	
n542 (E)	6	#6	9'-1"	
n503 (E)	2	#6	3'-11"	
n544 (E)	17	#9	8'-2"	
p540 (E)	3	#7	6'-3"	
p541 (E)	6	#7	14'-6"	
s501 (E)	14	#4	9'-5"	
s505 (E)	6	#4	7'-11"	
s506 (E)	1	#4	6'-5"	
t540 (E)	12	#5	9'-8"	
u501 (E)	12	#5	7'-5"	
u503 (E)	4	#5	8'-11"	
u542 (E)	12	#5	7'-11"	
v500 (E)	13	#5	3'-9"	
v501 (E)	14	#4	4'-8"	
v502 (E)	10	#4	6'-5"	
v503 (E)	30	#5	4'-2"	
v504 (E)	38	#4	3'-3"	
v506 (E)	25	#6	7' 1"	
v509 (E)	9	#5	6'-11"	
v514 (E)	6	#6	7'-2"	
v515 (E)	20	#6	7'-4"	
w540 (E)	12	#6	8'-9"	

Pourous Granular Embankment, Special	Cu. Yd.	89
Structure Excavation	Cu. Yd.	117
Concrete Structures	Cu. Yd.	16.8
Reinforcement Bars, Epoxy Coated	Pound	3,820
Furnishing Steel Piles, HP8x36	Foot	111
Driving Piles	Foot	111
Pile Shoes	Each	3
Concrete Encasement	Cu. Yd.	0.6
Concrete Sealer	Sq. Ft.	91
Geocomposite Wall Drain	Sq. Yd.	43
Pipe Underdrains for Structures 4"	Foot	41
Bar Splicers	Each	42

ABUTMENT C NORTH WINGWALL
STRUCTURE NO. 081-0024 (W.B.)
STRUCTURE NO. 081-0025 (E.B.)

DESIGNED	LAN
CHECKED	MMB
DRAWN	LAN
CHECKED	MMB

INFRASTRUCTURE ENGINEERING | INCORPORATED
33 West Monroe | Suite 1540 | Chicago, IL 60603
P 312.425.9560 | F 312.425.9564 | www.infrastructure-eng.com

SHEET NO. 51	F.A.I. RTE.	SECTION	COUNTY	TOTAL SHEETS	SHEET NO.
77 SHEETS	280	81-1(VB-1)R	ROCK ISLAND	503	387
			CONTRACT NO. 64815		
	FED. ROAD DIST. NO. _	ILLINOIS	FED. AID PROJECT		

STATE OF ILLINOIS
DEPARTMENT OF TRANSPORTATION

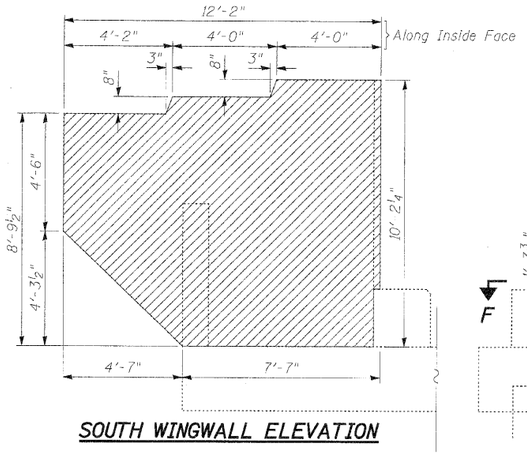

SOUTH WINGWALL ELEVATION

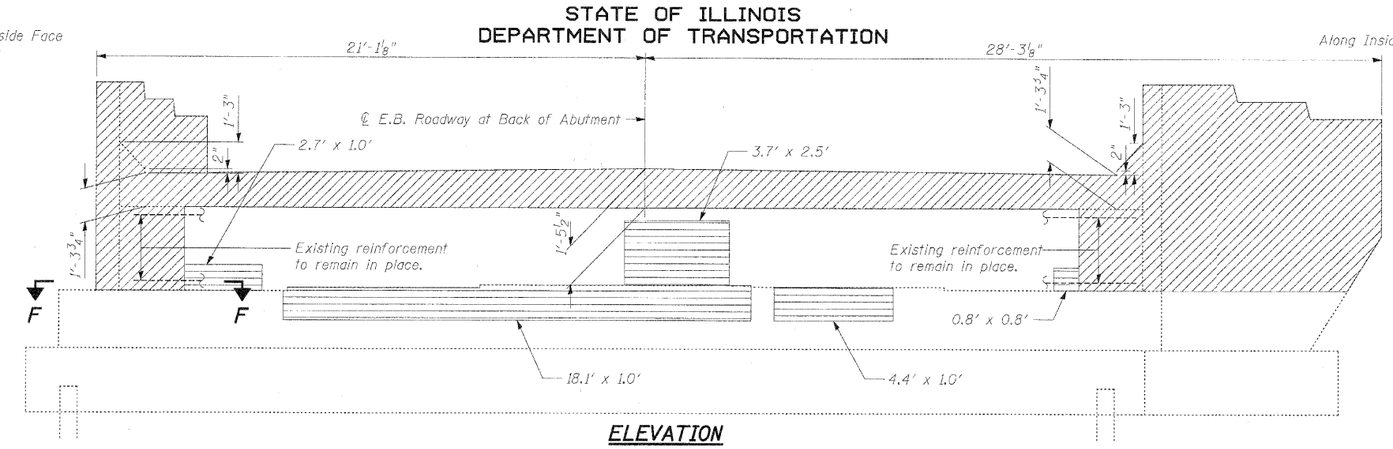

ELEVATION

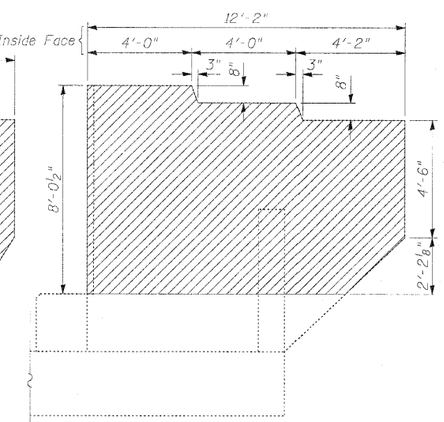

NORTH WINGWALL ELEVATION

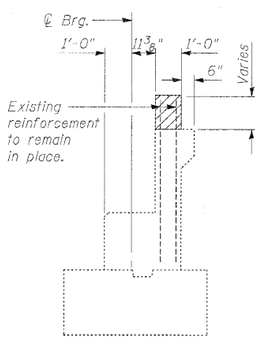

SECTION A-A

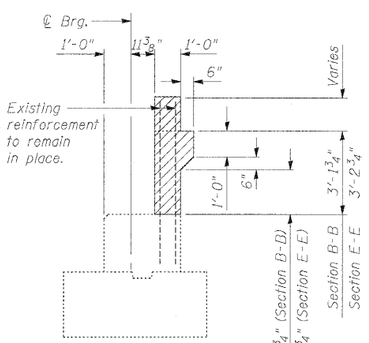

SECTION B-B
SECTION E-E

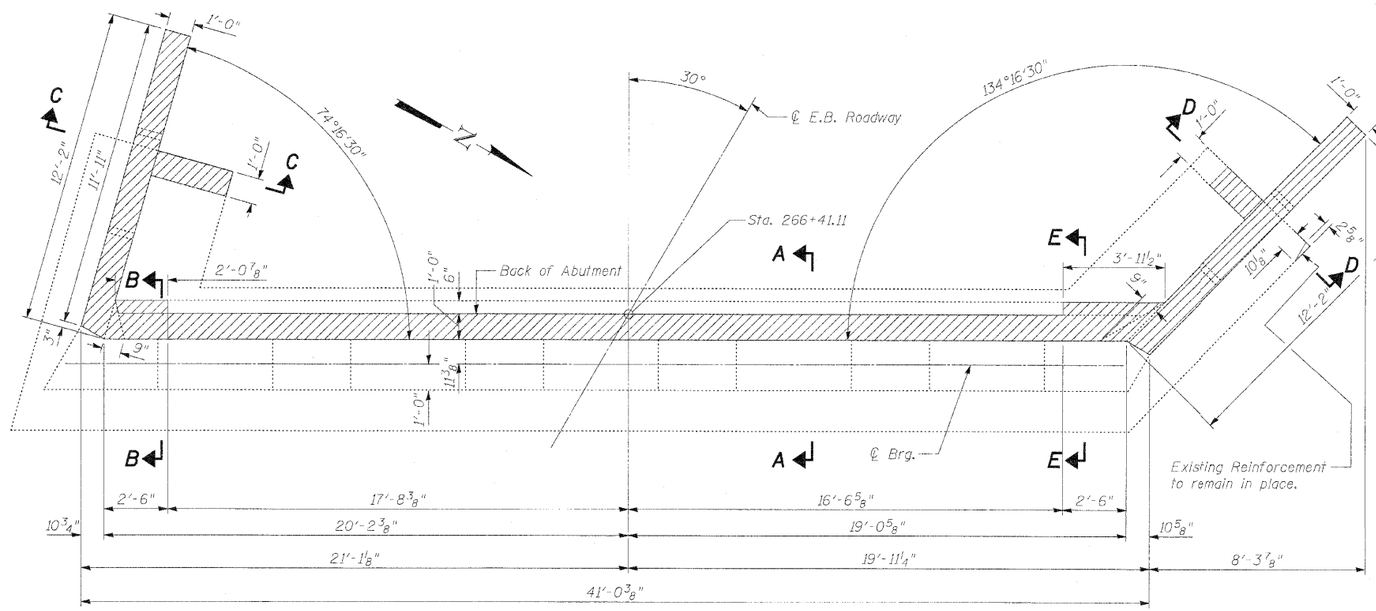

TOP VIEW

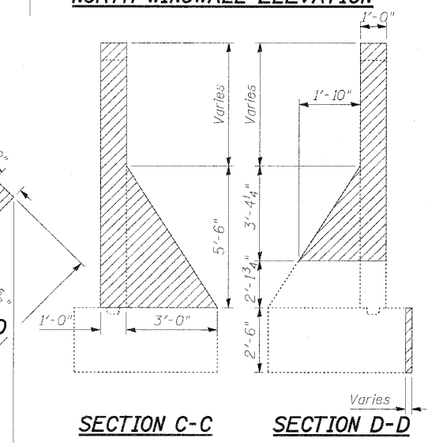

SECTION C-C
SECTION D-D

Notes:

Existing reinforcement bars not extending into the new construction shall be cut flush with the concrete left in place unless noted otherwise. Cost included with Concrete Removal.

Existing exposed reinforcement indicated to remain in place shall be cleaned and incorporated into the new construction. Cost included with Concrete Removal.

Repair of the existing abutment shall include but not be limited to the areas shown. The actual areas to be repaired will be determined by the Engineer at the time of construction.

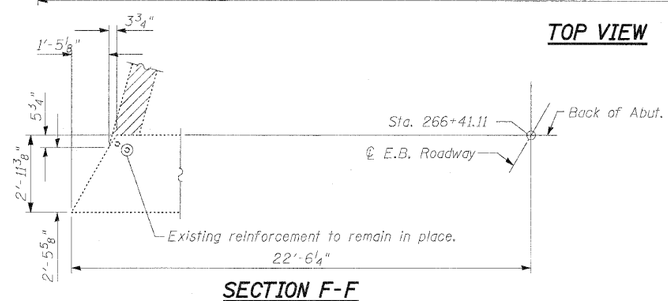

SECTION F-F

Indicates limits of Concrete Removal

Indicates limits of Structural Repair of Concrete (Depth Equal to or Less Than 5 Inches)

BILL OF MATERIAL

Item	Unit	Total
Concrete Removal	Cu. Yd.	10.4
Structural Repair of Concrete (Depth Equal to or Less Than 5 Inches)	Sq. Ft.	35

ABUTMENT D CONCRETE REMOVAL & REPAIRS
STRUCTURE NO. 081-0024 (W.B.)
STRUCTURE NO. 081-0025 (E.B.)

DESIGNED	LAN
CHECKED	SPK
DRAWN	ASJ
CHECKED	SPK

INFRASTRUCTURE ENGINEERING INCORPORATED
33 West Monroe | Suite 1540 | Chicago, IL 60603
P 312.425.9560 | F 312.425.9564 | www.infrastructure-eng.com

SHEET NO. 52	F.A.I. RTE.	SECTION	COUNTY	TOTAL SHEETS	SHEET NO.
77 SHEETS	280	81-1(VB-1)R	ROCK ISLAND	503	388
			CONTRACT NO. 64815		
	FED. ROAD DIST. NO. _	ILLINOIS	FED. AID PROJECT		

STATE OF ILLINOIS
DEPARTMENT OF TRANSPORTATION

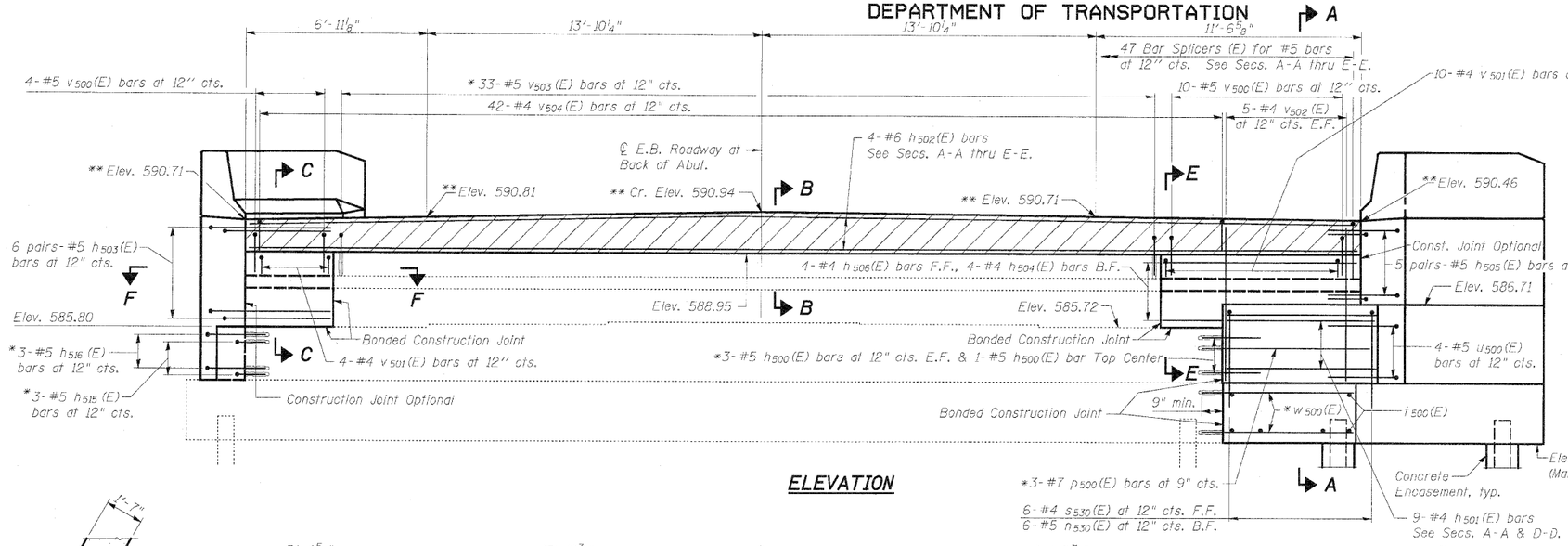

ELEVATION

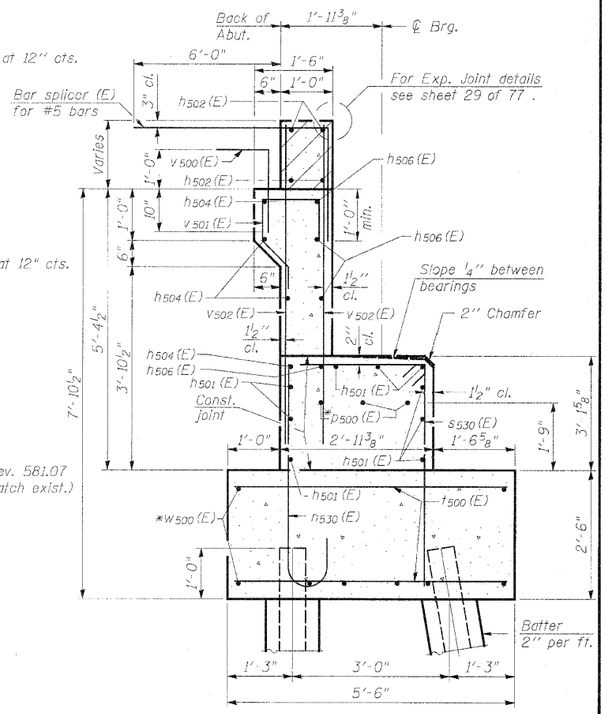

SECTION A-A

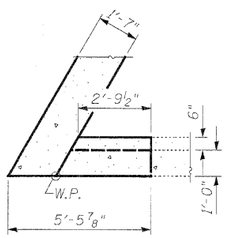

SECTION F-F

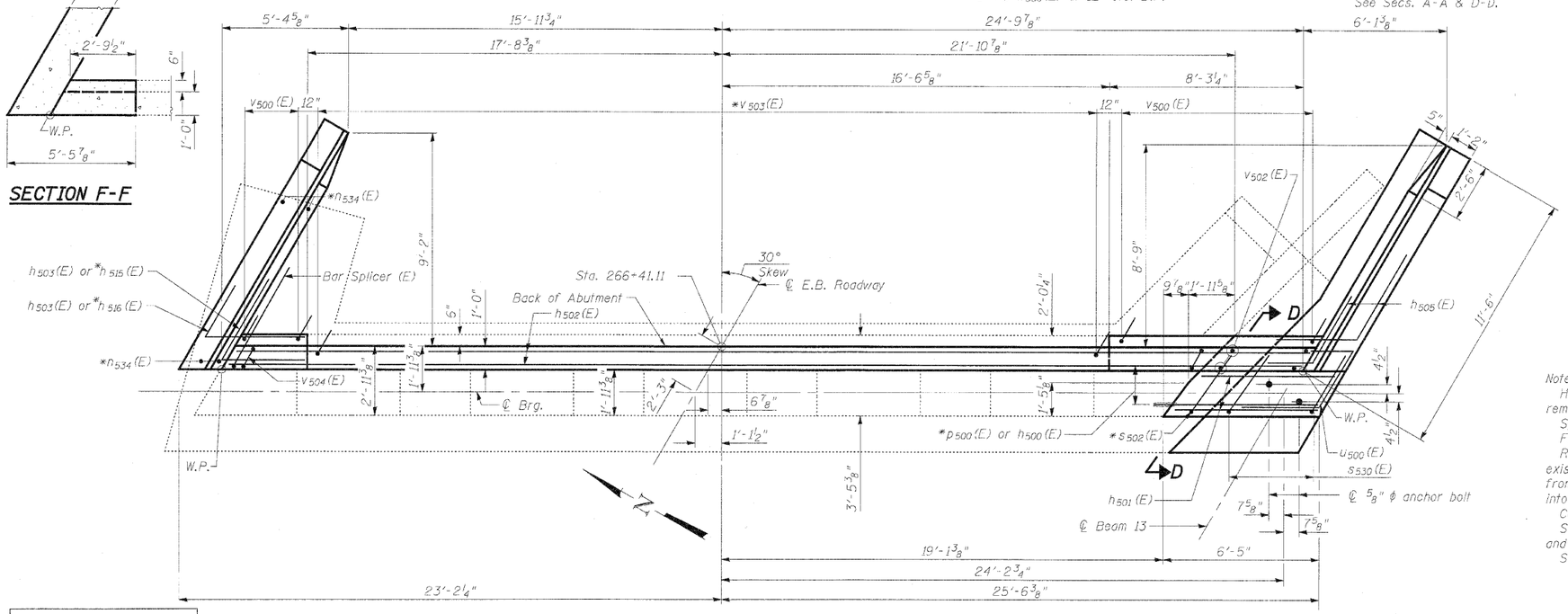

TOP VIEW

* Epoxy grout h500(E), h515(E), h516(E), p500(E), s531(E), v503(E), and w500(E) bars in 9" (min.) drilled holes. See Section 584 of the Standard Specifications. Cost of hole drilling and epoxy grouting are included with "Reinforcement Bars, Epoxy Coated".

** Elevation at Back of Abutment
B.F. = Back Face
E.F. = Each Face
F.F. = Front Face

Notes:
Hatched area to be poured after superstructure false work has been removed. Quantity of concrete included with Concrete Superstructure.
Space reinforcement in cap to miss anchor bolts.
For Concrete Encasement details, see sheet 70 of 77.
Reinforcement bars that are to be grouted into existing concrete shall be spaced at least 6" (unless noted) from the edge of existing concrete and shall be embedded into the existing concrete a minimum of 9".
Contractor shall avoid drilling into existing reinforcement.
See Sheet 54 of 77 for Footing Plan, South Wing Wall, and Secs. B-B, C-C, D-D, & E-E.
See Sheet 55 of 77 for North Wing Wall and Bill of Material.

ABUTMENT D WIDENING
STRUCTURE NO. 081-0024 (W.B.)
STRUCTURE NO. 081-0025 (E.B.)

DESIGNED	LAN
CHECKED	MMB
DRAWN	LAN
CHECKED	MMB

INFRASTRUCTURE ENGINEERING | INCORPORATED
33 West Monroe | Suite 1540 | Chicago, IL 60603
P 312.425.9560 | F 312.425.9564 | www.infrastructure-eng.com

SHEET NO. 53	F.A.I. RTE.	SECTION	COUNTY	TOTAL SHEETS	SHEET NO.
77 SHEETS	280	81-1(VB-1)R	ROCK ISLAND	503	389
			CONTRACT NO. 64815		
	FED. ROAD DIST. NO. _	ILLINOIS	FED. AID PROJECT		

STATE OF ILLINOIS
DEPARTMENT OF TRANSPORTATION

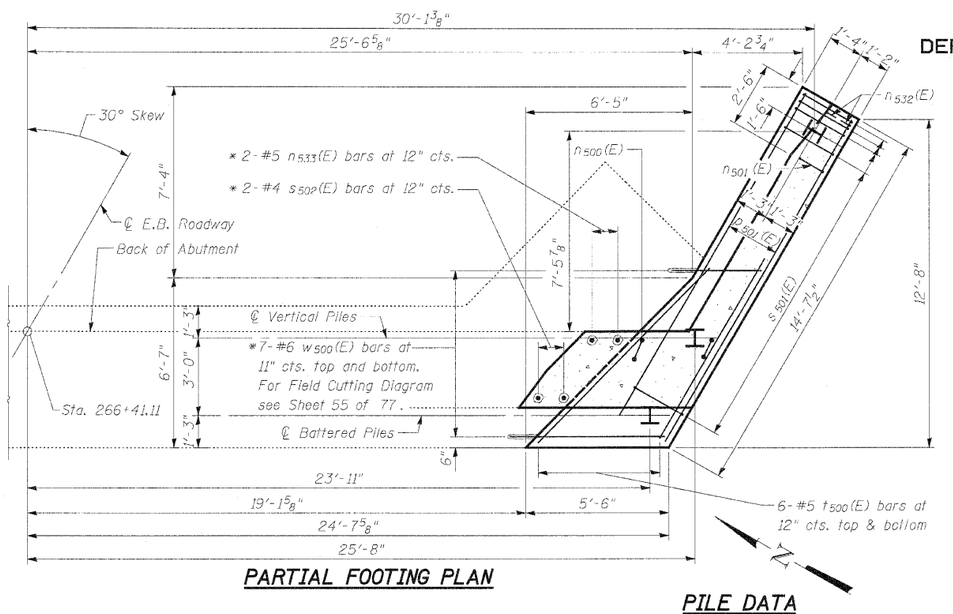

PARTIAL FOOTING PLAN

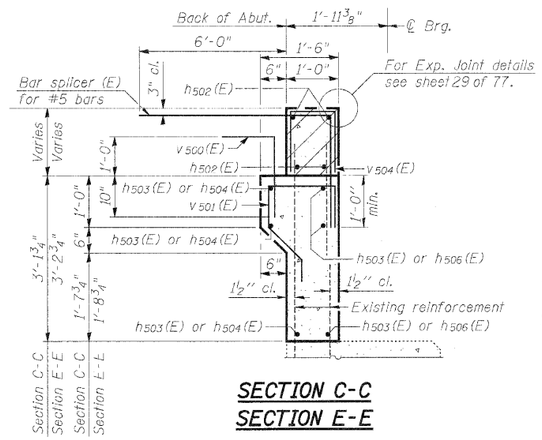

SECTION C-C
SECTION E-E

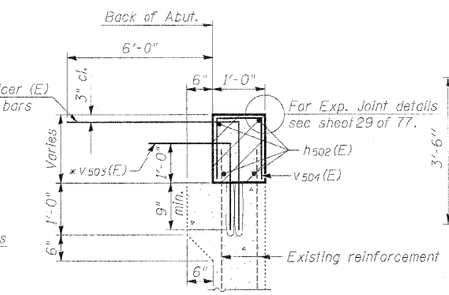

SECTION B-B

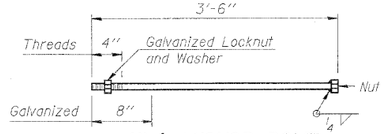

1" ϕ ANCHOR BOLT

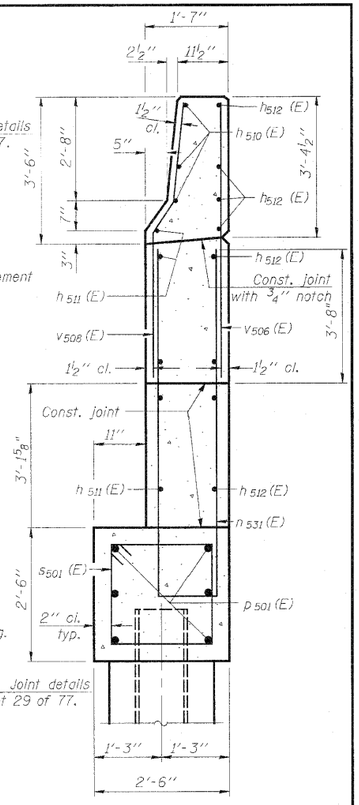

SECTION J-J

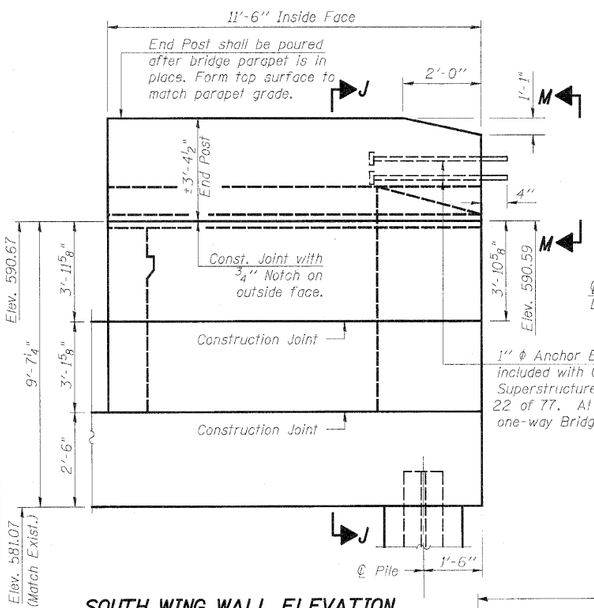

SOUTH WING WALL ELEVATION
Showing Dimensions

PILE DATA

Type: HP8x36 with Pile Shoes
Nominal Required Bearing: 286 kips
Allowable Resistance Available: 95 kips
Est. Length: 30'
No. Production Piles: 3
No. Test Piles: 0

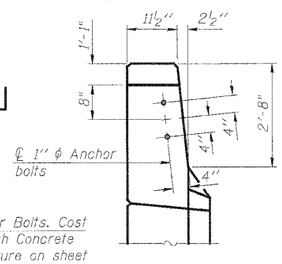

VIEW M-M

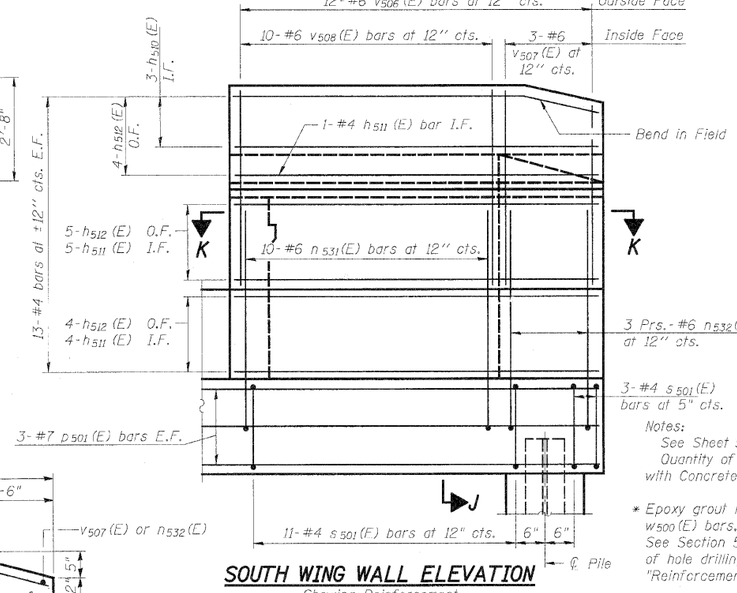

SOUTH WING WALL ELEVATION
Showing Reinforcement

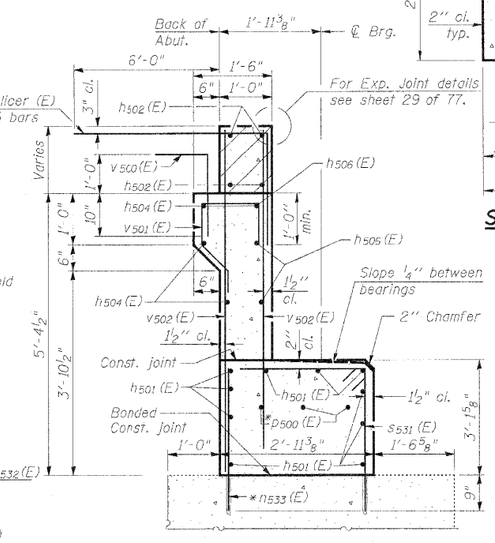

SECTION D-D

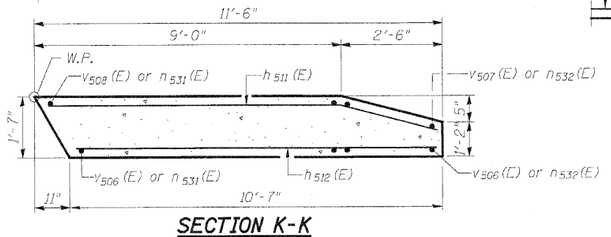

SECTION K-K

Notes:
See Sheet 55 of 77 for Bill of Material.
Quantity of concrete in end post included with Concrete Superstructure on sheet 22 of 77.

* Epoxy grout n533(E), p500(E), s531(E), v503(E), w500(E) bars, and bar splicer in 9" (min.) drilled holes. See Section 584 of the Standard Specifications. Cost of hole drilling and epoxy grouting are included with "Reinforcement Bars, Epoxy Coated".

E.F. = Each Face
I.F. = Inside Face
O.F. = Outside Face

ABUTMENT D FOOTING WIDENING AND SOUTH WING WALL
STRUCTURE NO. 081-0024 (W.B.)
STRUCTURE NO. 081-0025 (E.B.)

DESIGNED	LAN
CHECKED	MMB
DRAWN	LAN
CHECKED	MMB

INFRASTRUCTURE ENGINEERING | INCORPORATED
33 West Monroe | Suite 1540 | Chicago, IL 60603
P 312.425.9560 | F 312.425.9564 | www.infrastructure-eng.com

SHEET NO. 54	F.A.I. RTE.	SECTION	COUNTY	TOTAL SHEETS	SHEET NO.
77 SHEETS	280	81-1(VB-1)R	ROCK ISLAND	503	390
			CONTRACT NO. 64815		
	FED. ROAD DIST. NO. _	ILLINOIS	FED. AID PROJECT		

STATE OF ILLINOIS
DEPARTMENT OF TRANSPORTATION

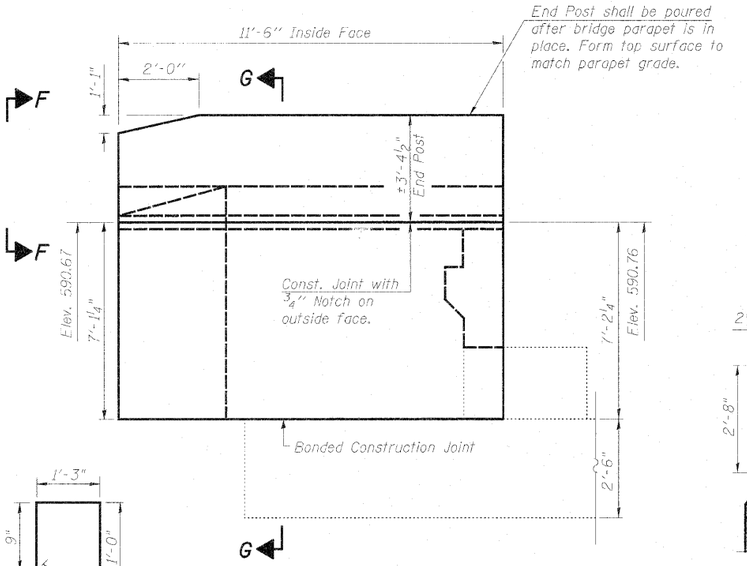

NORTH WING WALL ELEVATION
Showing Dimensions

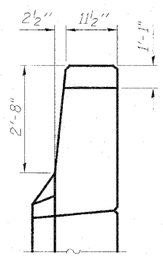

VIEW F-F

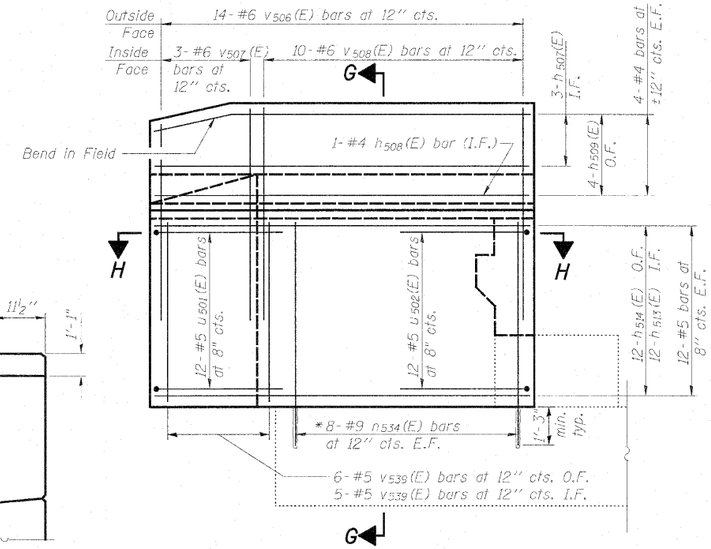

NORTH WING WALL ELEVATION
Showing Reinforcement

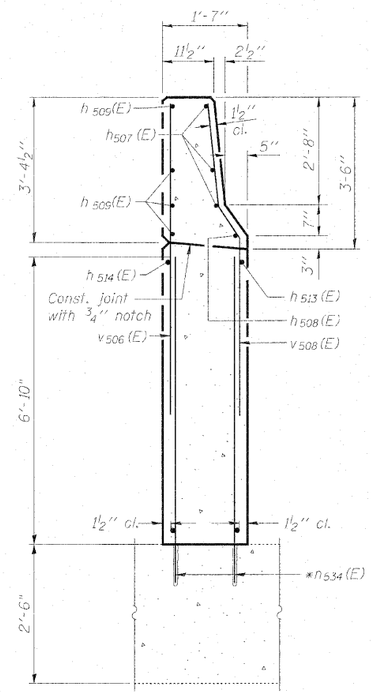

SECTION G-G

Notes:
Quantity of concrete in end post included with Concrete Superstructure on sheet 22 of 77.
For details of Bar Splicers, see sheet 71 of 77.

*Epoxy grout n534(E) bars in 1'-3" (min.) drilled holes. See Section 584 of the Standard Specifications. Cost of hole drilling and epoxy grouting are included with "Reinforcement Bars, Epoxy Coated".

E.F. = Each Face
I.F. = Inside Face
O.F. = Outside Face

BILL OF MATERIAL

Bar	No.	Size	Length	Shape
h500(E)	7	#5	4'-11"	
h501(E)	9	#5	5'-3"	
h502(E)	4	#6	45'-11"	
h503(E)	12	#5	8'-5"	
h504(E)	4	#4	8'-8"	
h505(E)	10	#5	8'-10"	
h506(E)	4	#5	8'-0"	
h507(E)	3	#4	11'-10"	
h508(E)	1	#4	11'-3"	
h509(E)	4	#4	12'-0"	
h510(E)	3	#4	10'-11"	
h511(E)	10	#4	11'-1"	
h512(E)	13	#4	10'-4"	
h513(E)	12	#5	11'-3"	
h514(E)	12	#5	12'-0"	
h515(E)	3	#5	4'-2"	
h516(E)	3	#5	5'-8"	
n530(E)	6	#5	5'-10"	
n531(E)	10	#6	17'-6"	
n532(E)	6	#6	8'-9"	
n533(E)	2	#5	3'-9"	
n534(E)	16	#9	8'-1"	
p500(E)	3	#7	7'-0"	
p501(E)	6	#7	14'-4"	
s501(E)	14	#4	9'-5"	
s530(E)	6	#4	8'-5"	
s531(E)	2	#4	6'-11"	
t500(E)	12	#5	9'-9"	
u500(E)	4	#5	9'-6"	
u501(E)	12	#5	7'-5"	
u502(E)	12	#5	8'-1"	
v500(E)	14	#5	3'-9"	
v501(E)	14	#4	4'-8"	
v502(E)	10	#4	6'-5"	
v503(E)	33	#5	4'-2"	
v504(E)	42	#4	3'-3"	
v506(E)	26	#6	7'-1"	
v507(E)	6	#6	7'-1"	
v508(E)	20	#6	7'-2"	
v539(E)	11	#5	6'-8"	
w500(E)	7	#6	9'-4"	
Pourous Granular Embankment, Special			Cu. Yd.	100
Structure Excavation			Cu. Yd.	125
Concrete Structures			Cu. Yd.	17.7
Reinforcement Bars, Epoxy Coated			Pound	3820
Furnishing Steel Piles, HP8x36			Foot	90
Driving Piles			Foot	90
Pile Shoes			Each	3
Concrete Encasement			Cu. Yd.	0.6
Concrete Sealer			Sq. Ft.	99
Geocomposite Wall Drain			Sq. Yd.	47
Pipe Underdrains for Structures 4"			Foot	46
Bar Splicers			Each	47

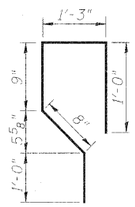

BAR v501(E)

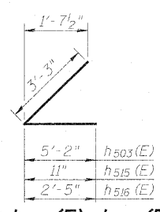

BARS h503(E), h515(E), & h516(E)

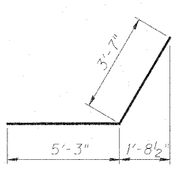

BAR h505(E)

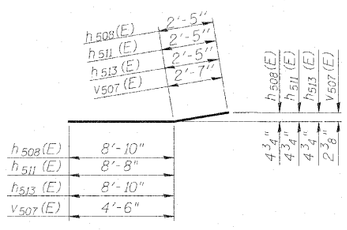

BARS h508(E), h511(E), h513(E), and v507(E)

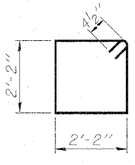

BAR s501(E)

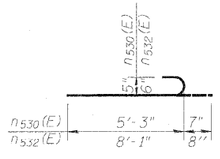

BARS n530(E) and n532(E)

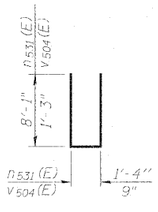

BARS n531(E) and v504(E)

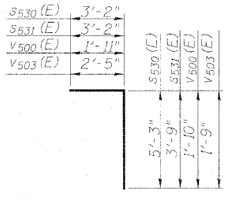

BARS s530(E), s531(E), v500(E), and v503(E)

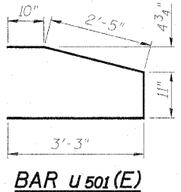

BAR u501(E)

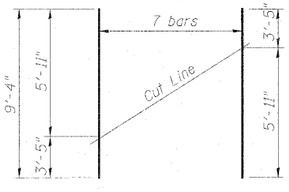

BAR w500(E)

Order bars full length. Cut to fit as shown and place in the bottom of the footing. Use remainder of bars in the top of the footing.

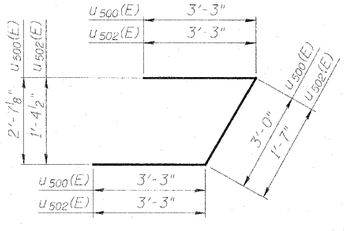

BARS u500(E) and u502(E)

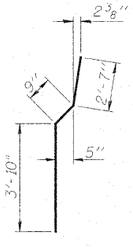

BAR v508(E)

ABUTMENT D NORTH WING WALL
STRUCTURE NO. 081-0024 (W.B.)
STRUCTURE NO. 081-0025 (E.B.)

DESIGNED	LAN
CHECKED	MMB
DRAWN	LAN
CHECKED	MMB

INFRASTRUCTURE ENGINEERING | INCORPORATED
33 West Monroe | Suite 1540 | Chicago, IL 60603
P 312.425.9560 | F 312.425.9564 | www.infrastructure-eng.com

SHEET NO. 55	F.A.I. RTE.	SECTION	COUNTY	TOTAL SHEETS	SHEET NO.
77 SHEETS	280	81-1(VB-1)R	ROCK ISLAND	503	391
			CONTRACT NO. 64815		
	FED. ROAD DIST. NO. _	ILLINOIS	FED. AID PROJECT		

STATE OF ILLINOIS
DEPARTMENT OF TRANSPORTATION

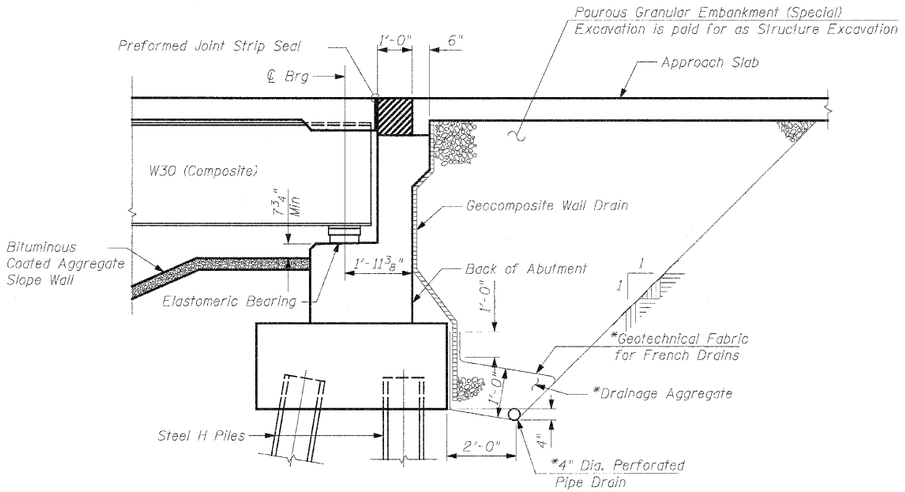

TYPICAL ABUTMENT DRAINAGE DETAIL

(Dimensions at Right Angle)

*Included in the cost of Pipe Underdrains for Structures.

Note:
All drainage system components shall extend to each wingwall except an outlet pipe shall extend until intersecting with the side slopes. The pipes shall drain into concrete headwalls (See Article 601.05 of the Standard Specifications and Highway Standard 601101).

ABUTMENT DRAINAGE
STRUCTURE NO. 081-0024 (W.B.)
STRUCTURE NO. 081-0025 (E.B.)

DESIGNED	-
CHECKED	-
DRAWN	ASJ
CHECKED	SPK

INFRASTRUCTURE ENGINEERING INCORPORATED
33 West Monroe | Suite 1540 | Chicago, IL 60603
P 312.425.9560 | F 312.425.9564 | www.infrastructure-eng.com

SHEET NO. 56	F.A.I. RTE.	SECTION	COUNTY	TOTAL SHEETS	SHEET NO.
77 SHEETS	280	81-1(VB-1)R	ROCK ISLAND	503	392
	SN 081-0024 (WB), 0025 (EB)		CONTRACT NO. 64815		
	FED. ROAD DIST. NO. _	ILLINOIS	FED. AID PROJECT		

STATE OF ILLINOIS
DEPARTMENT OF TRANSPORTATION

TOP PLAN

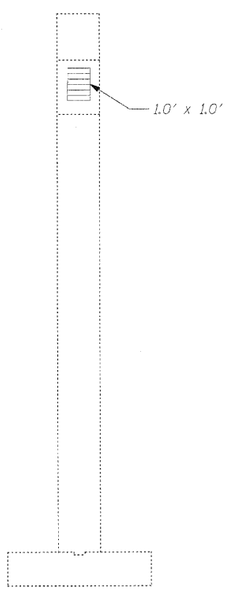

NORTH ELEVATION
(Looking South)

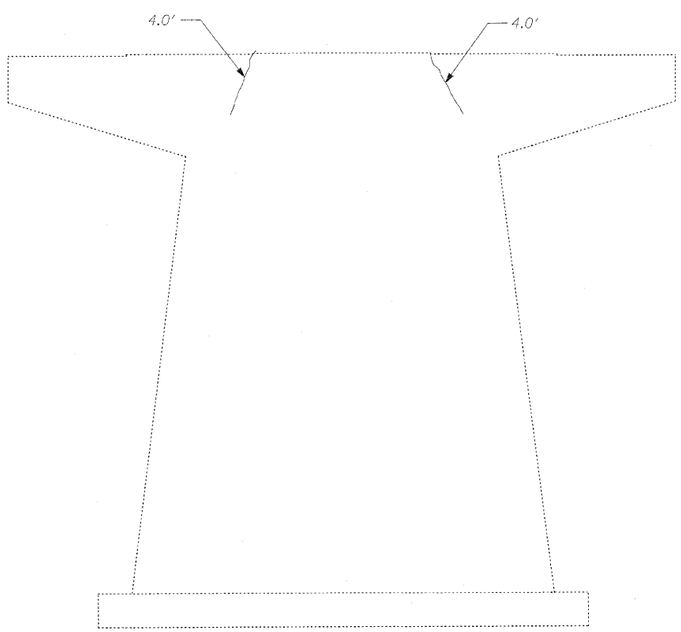

WEST ELEVATION
(Looking East)

SOUTH ELEVATION
(Looking North)

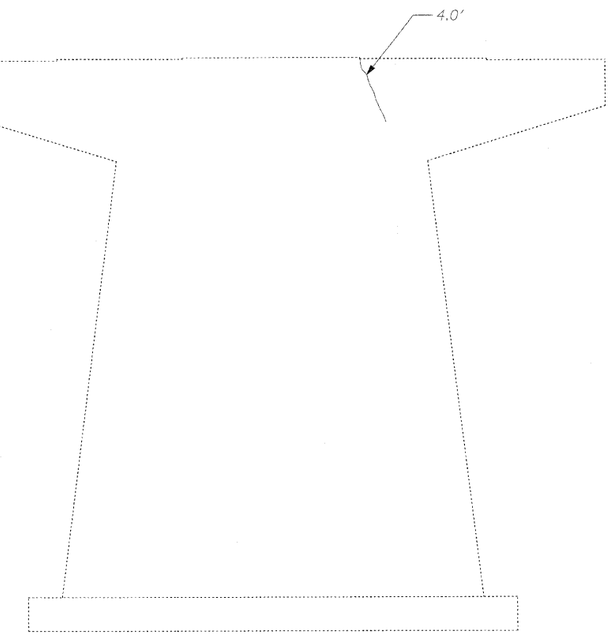

EAST ELEVATION
(Looking West)

BILL OF MATERIAL

ITEM	UNIT	QUANTITY
Epoxy Crack Injection	Foot	12
Structural Repair of Concrete (Depth Equal to or Less Than 5 Inches)	Sq. Ft.	1

PIER 1 REPAIRS
STRUCTURE NO. 081-0024 (W.B.)
STRUCTURE NO. 081-0025 (E.B.)

DESIGNED	
CHECKED	
DRAWN	ASJ
CHECKED	SPK

Note:
Repair of the existing pier shall include but not be limited to the areas shown. The actual areas to be repaired will be determined by the Engineer at the time of construction.

Indicates limits of Structural Repair of Concrete (Depth Equal to or Less Than 5 Inches)

Indicates limits of Epoxy Crack Injection

INFRASTRUCTURE ENGINEERING INCORPORATED
33 West Monroe | Suite 1540 | Chicago, IL 60603
P 312.425.9560 | F 312.425.9564 | www.infrastructure-eng.com

SHEET NO. 57	F.A.I. RTE.	SECTION	COUNTY	TOTAL SHEETS	SHEET NO.
77 SHEETS	280	81-1(VB-1)R	ROCK ISLAND	503	393
			CONTRACT NO. 64815		
	FED. ROAD DIST. NO. _	ILLINOIS	FED. AID PROJECT		

STATE OF ILLINOIS
DEPARTMENT OF TRANSPORTATION

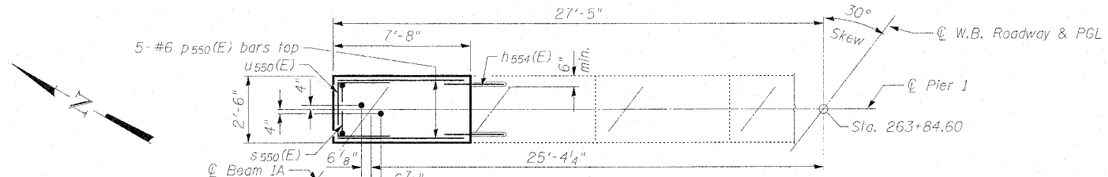

PARTIAL TOP PLAN

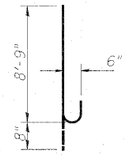

BAR n550 (E)

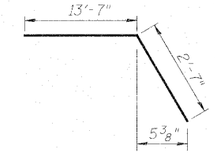

BAR h553(E)

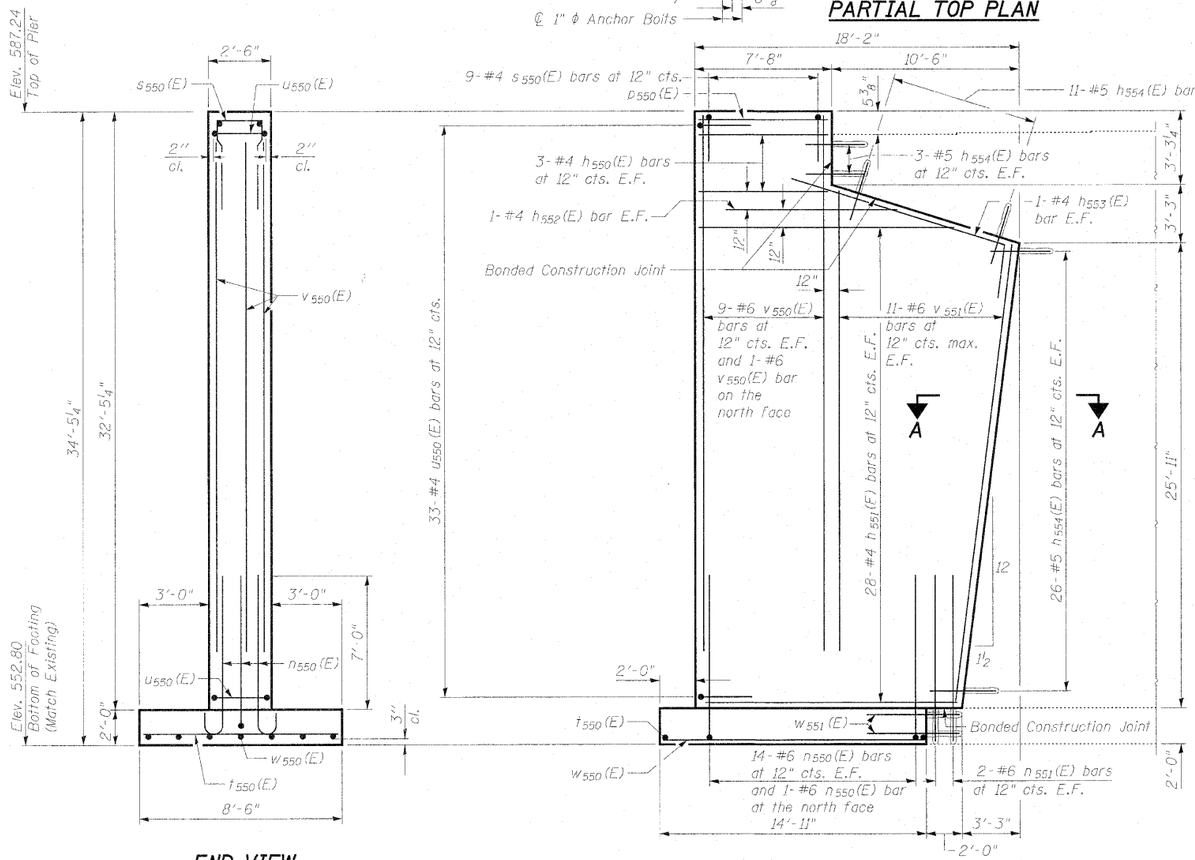

END VIEW

PARTIAL ELEVATION
(Looking East)

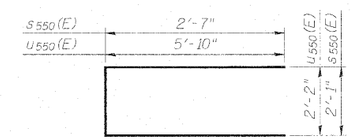

BARS s550 (E) & u550 (E)

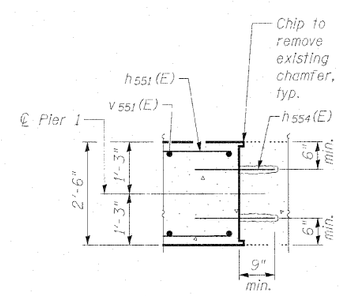

SECTION A-A

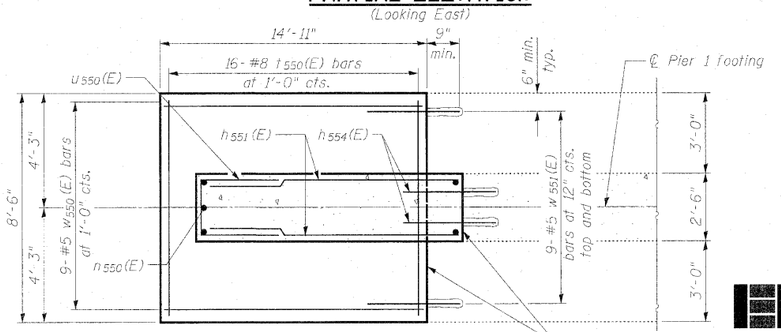

PARTIAL FOOTING PLAN

BILL OF MATERIAL

Bar	No.	Size	Length	Shape
h550(E)	6	#4	7'-4"	
h551(E)	56	#4	14'-7"	
h552(E)	2	#4	8'-5"	
h553(E)	2	#4	16'-2"	
h554(E)	80	#5	4'-2"	
n550(E)	29	#6	9'-5"	
n551(E)	4	#6	7'-9"	
p550(E)	5	#6	7'-4"	
s550(E)	9	#4	7'-3"	
t550(E)	16	#8	8'-0"	
u550(E)	33	#4	13'-10"	
v550(E)	19	#6	29'-3"	
v551(E)	22	#6	25'-10"	
w550(E)	9	#5	14'-7"	
w551(E)	18	#5	4'-2"	
Structure Excavation		Cu. Yd.	109	
Concrete Structures		Cu. Yd.	55.4	
Reinforcement Bars, Epoxy Coated		Pound	4,060	

Notes:
Space reinforcement in cap to miss anchor bolts.
Allowable soil bearing pressure is 7,500 psf on sound rock.
Epoxy grout h554(E), n551(E) and w551(E) bars in 9" (min) drilled holes. See Section 584 of the Standard Specifications. Cost of hole drilling and epoxy grouting is included with Reinforcement Bars, Epoxy Coated.
Reinforcement bars that are to be grouted into existing concrete shall be spaced at least 6" from the edge of existing concrete. Contractor shall avoid drilling into existing reinforcement.

PIER 1 WIDENING
STRUCTURE NO. 081-0024 (W.B.)
STRUCTURE NO. 081-0025 (E.B.)

DESIGNED	LAN
CHECKED	SPK
DRAWN	LAN
CHECKED	SPK

INFRASTRUCTURE ENGINEERING | INCORPORATED
33 West Monroe | Suite 1540 | Chicago, IL 60603
P 312.425.9560 | F 312.425.9564 | www.infrastructure-eng.com

SHEET NO. 58	F.A.I. RTE.	SECTION	COUNTY	TOTAL SHEETS	SHEET NO.
77 SHEETS	280	81-1(VB-1)R	ROCK ISLAND	503	394
			CONTRACT NO. 64815		
	FED. ROAD DIST. NO. _	ILLINOIS	FED. AID PROJECT		

STATE OF ILLINOIS
DEPARTMENT OF TRANSPORTATION

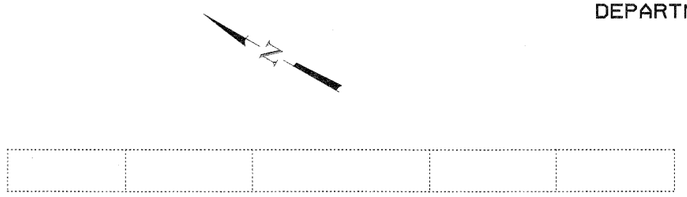

TOP PLAN

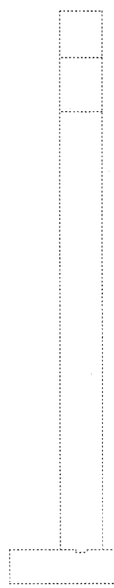

NORTH ELEVATION
(Looking South)

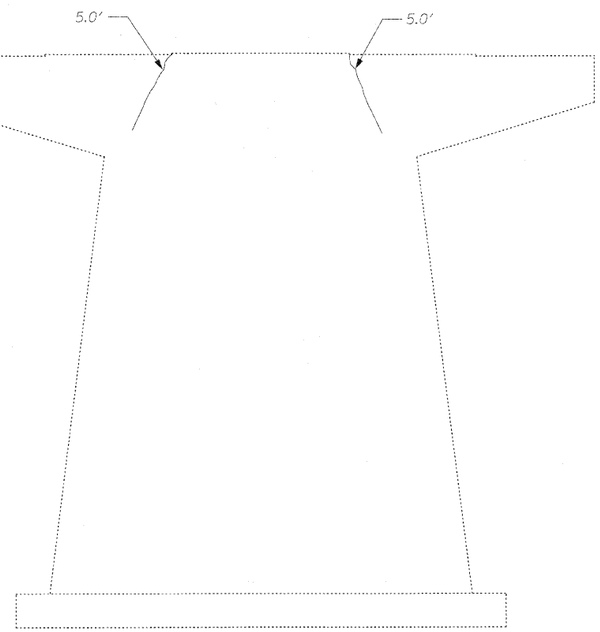

WEST ELEVATION
(Looking East)

SOUTH ELEVATION
(Looking North)

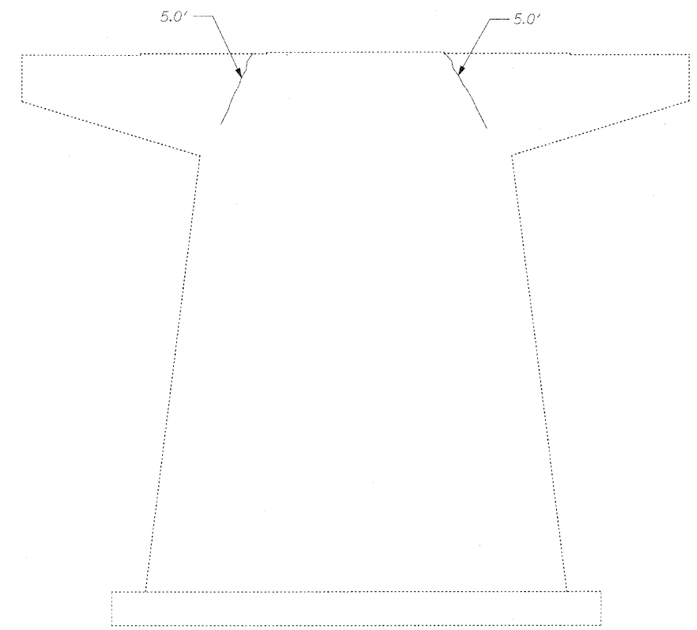

EAST ELEVATION
(Looking West)

BILL OF MATERIAL

ITEM	UNIT	QUANTITY
Epoxy Crack Injection	Foot	20

PIER 2 REPAIRS
STRUCTURE NO. 081-0024 (W.B.)
STRUCTURE NO. 081-0025 (E.B.)

DESIGNED	
CHECKED	
DRAWN	ASJ
CHECKED	SPK

Note:
Repair of the existing pier shall include but not be limited to the areas shown. The actual areas to be repaired will be determined by the Engineer at the time of construction.

Indicates limits of Epoxy Crack Injection

INFRASTRUCTURE ENGINEERING | INCORPORATED
33 West Monroe | Suite 1540 | Chicago, IL 60603
P 312.425.9560 | F 312.425.9564 | www.infrastructure-eng.com

SHEET NO. 59	F.A.I. RTE.	SECTION	COUNTY	TOTAL SHEETS	SHEET NO.
77 SHEETS	280	81-1(VB-1)R	ROCK ISLAND	503	395
			CONTRACT NO. 64815		
	FED. ROAD DIST. NO. _	ILLINOIS FED. AID PROJECT			

STATE OF ILLINOIS
DEPARTMENT OF TRANSPORTATION

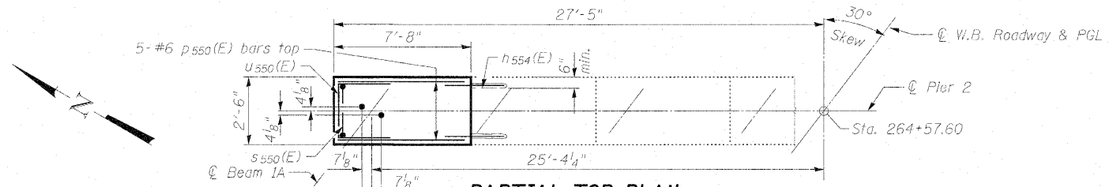

PARTIAL TOP PLAN

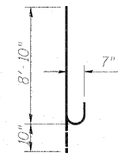

BAR n552(E)

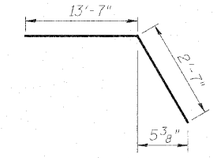

BAR h553(E)

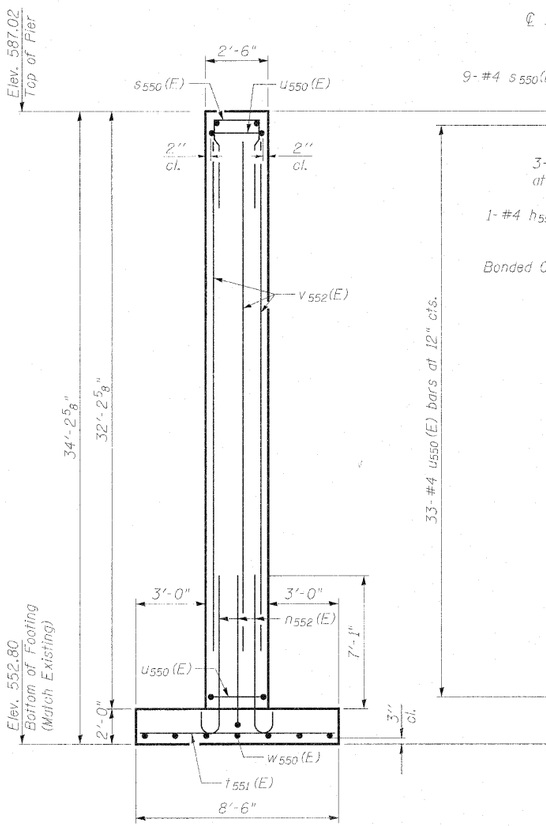

END VIEW

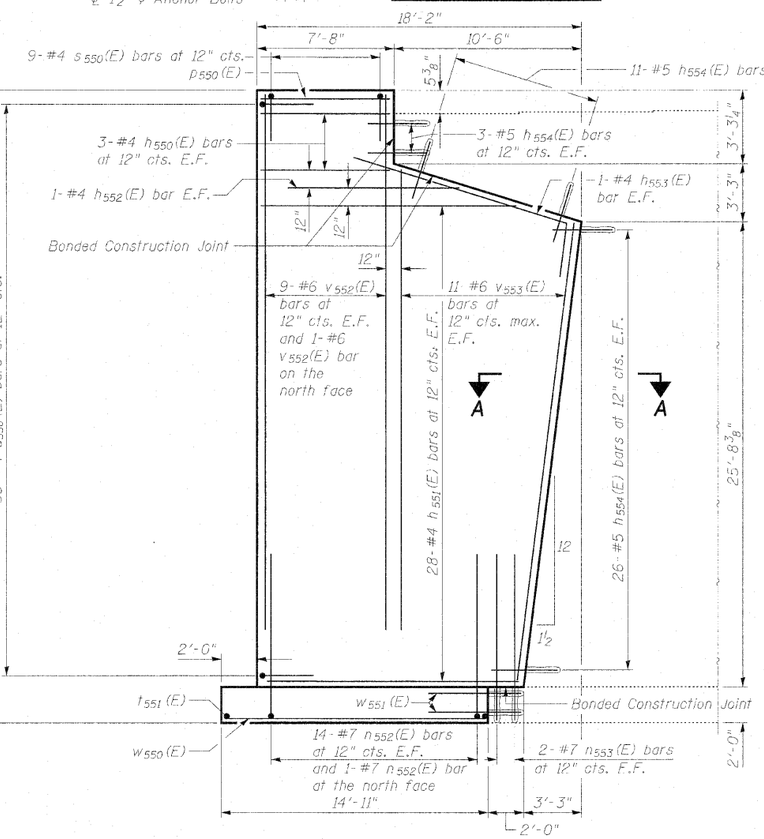

PARTIAL ELEVATION
(Looking East)

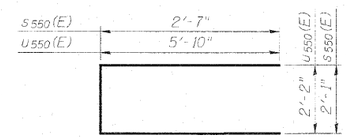

BARS s550(E) & u550(E)

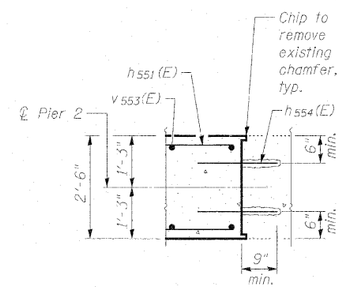

SECTION A-A

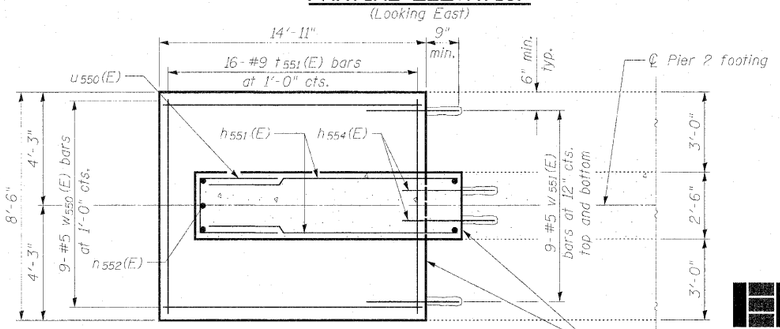

PARTIAL FOOTING PLAN

BILL OF MATERIAL

Bar	No.	Size	Length	Shape
h550(E)	6	#4	7'-4"	
h551(E)	56	#4	14'-7"	
h552(E)	2	#4	8'-5"	
h553(E)	2	#4	16'-2"	
h554(E)	80	#5	4'-2"	
n552(E)	29	#7	9'-8"	
n553(E)	4	#7	7'-10"	
p550(E)	5	#6	7'-4"	
s550(E)	9	#4	7'-3"	
t551(E)	16	#9	8'-0"	
u550(E)	33	#4	13'-10"	
v552(E)	19	#6	28'-11"	
v553(E)	22	#6	25'-7"	
w550(E)	9	#5	14'-7"	
w551(E)	18	#5	4'-2"	
Structure Excavation			Cu. Yd.	89
Concrete Structures			Cu. Yd.	55.1
Reinforcement Bars, Epoxy Coated			Pound	4,320

Notes:
Space reinforcement in cap to miss anchor bolts.
Allowable soil bearing pressure is 7,500 psf on sound rock.
Epoxy grout h554(E), n553(E) and w551(E) bars in 9" (min) drilled holes. See Section 584 of the Standard Specifications. Cost of hole drilling and epoxy grouting is included with Reinforcement Bars, Epoxy Coated.
Reinforcement bars that are to be grouted into existing concrete shall be spaced at least 6" from the edge of existing concrete. Contractor shall avoid drilling into existing reinforcement.

PIER 2 WIDENING
STRUCTURE NO. 081-0024 (W.B.)
STRUCTURE NO. 081-0025 (E.B.)

DESIGNED	LAN
CHECKED	SPK
DRAWN	ASJ
CHECKED	SPK

INFRASTRUCTURE ENGINEERING | INCORPORATED
33 West Monroe | Suite 1540 | Chicago, IL 60603
P 312.425.9560 | F 312.425.9564 | www.infrastructure-eng.com

SHEET NO. 60	F.A.I. RTE.	SECTION	COUNTY	TOTAL SHEETS	SHEET NO.
77 SHEETS	280	81-1(VB-1)R	ROCK ISLAND	503	396
			CONTRACT NO. 64815		
	FED. ROAD DIST. NO. _	ILLINOIS	FED. AID PROJECT		

STATE OF ILLINOIS
DEPARTMENT OF TRANSPORTATION

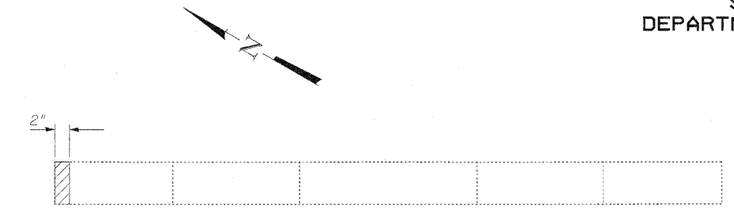

TOP PLAN

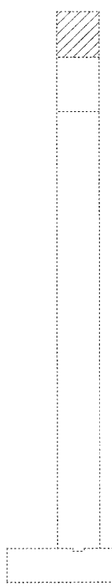

NORTH ELEVATION
(Looking South)

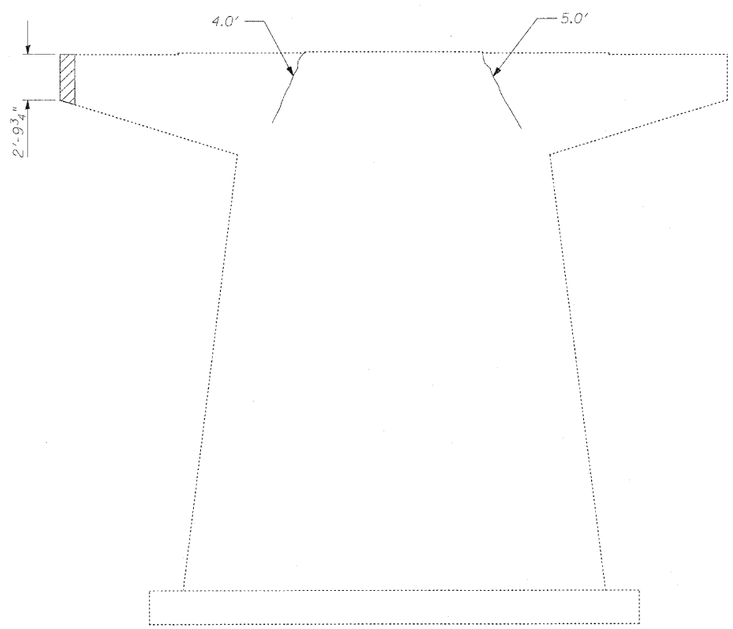

WEST ELEVATION
(Looking East)

SOUTH ELEVATION
(Looking North)

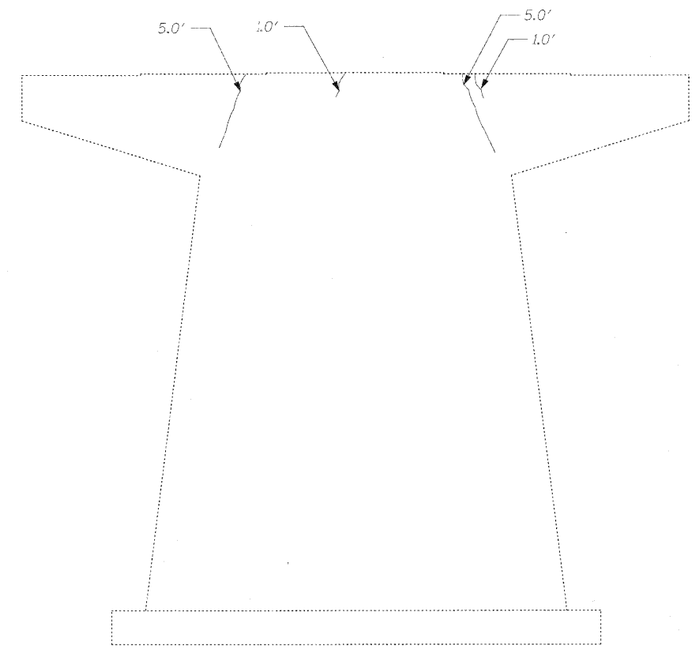

EAST ELEVATION
(Looking West)

BILL OF MATERIAL

ITEM	UNIT	QUANTITY
Concrete Removal	Cu. Yd.	0.1
Epoxy Crack Injection	Foot	21

DESIGNED	
CHECKED	
DRAWN	ASJ
CHECKED	SPK

Note:
Repair of the existing pier shall include but not be limited to the areas shown. The actual areas to be repaired will be determined by the Engineer at the time of construction.

Indicates limits of Concrete Removal

Indicates limits of Epoxy Crack Injection

INFRASTRUCTURE ENGINEERING | INCORPORATED
33 West Monroe | Suite 1540 | Chicago, IL 60603
P 312.425.9560 | F 312.425.9564 | www.infrastructure-eng.com

PIER 3 CONCRETE REMOVAL & REPAIRS
STRUCTURE NO. 081-0024 (W.B.)
STRUCTURE NO. 081-0025 (E.B.)

SHEET NO. 61	F.A.I. RTE.	SECTION	COUNTY	TOTAL SHEETS	SHEET NO.
	280	81-1(VB-1)R	ROCK ISLAND	503	397
77 SHEETS			CONTRACT NO. 64815		
	FED. ROAD DIST. NO. _	ILLINOIS	FED. AID PROJECT		

STATE OF ILLINOIS
DEPARTMENT OF TRANSPORTATION

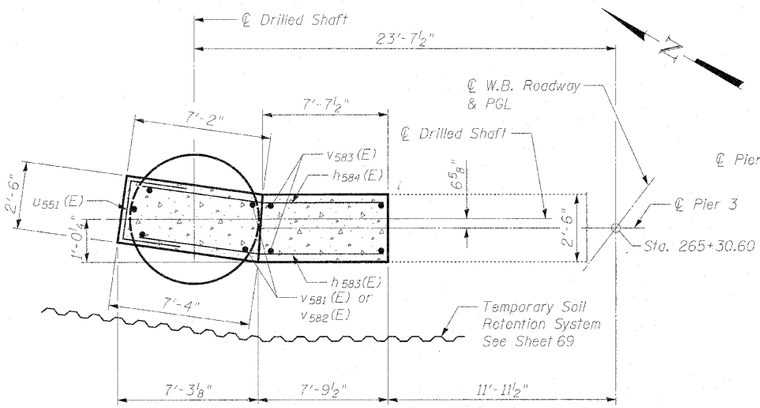

SECTION C-C

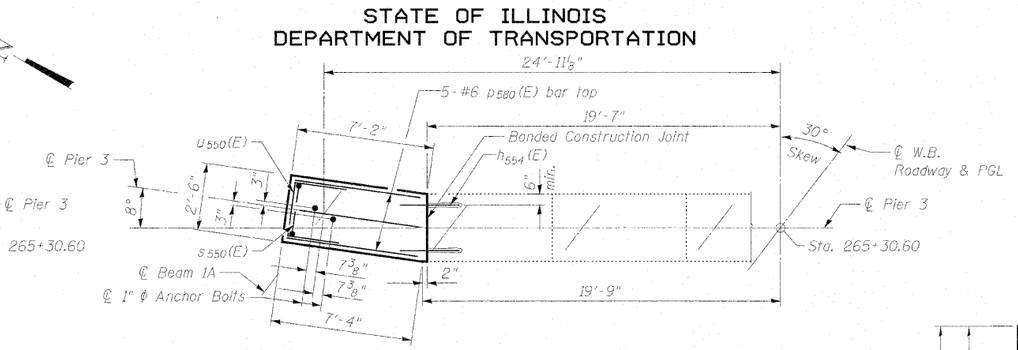

PARTIAL TOP PLAN

See Pier 3 Layout on Sheet 1.

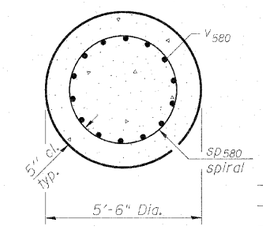

SECTION B-B

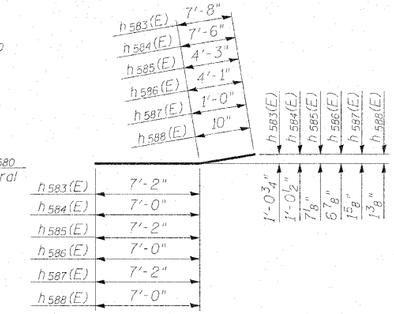

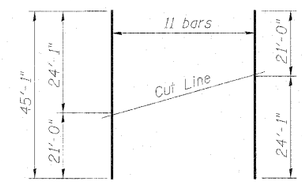

** BAR v583(E)

Order bars full length. Cut to fit as shown and place on one face of the pier. Use remainder of bars on the opposite face.

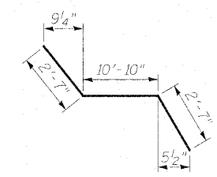

BAR h587(E)

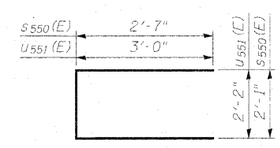

BARS s550(E), and u551(E)

BARS h583(E), h584(E), h585(E), h586(E), h587(E) & h588(E)

BILL OF MATERIAL

Bar	No.	Size	Length	Shape
h554(E)	28	#5	4'-2"	
h580(E)	44	#5	6'-11"	
h581(E)	3	#4	7'-0"	
h582(E)	3	#4	6'-10"	
h583(E)	23	#4	14'-10"	
h584(E)	23	#4	14'-6"	
h585(E)	1	#4	11'-5"	
h586(E)	1	#4	11'-1"	
h587(E)	2	#4	16'-0"	
p580(E)	5	#6	6'-11"	
s550(E)	8	#4	7'-3"	
*** sp580	1	#4	6'-8"	
u551(E)	29	#4	8'-2"	
v580	14	#8	6'-8"	
v581(E)	12	#6	8'-0"	
v582(E)	17	#6	27'-6"	
v583(E)	11	#6	45'-1"	
Structure Excavation			Cu. Yd.	11
Concrete Structures			Cu. Yd.	37.9
Reinforcement Bars, Epoxy Coated			Pounds	2,800
Reinforcement Bars			Pounds	410
Drilled Shaft in Soil			Cu. Yd.	4.4
Drilled Shaft in Rock			Cu. Yd.	1.5
Temporary Soil Retention System			Sq. Ft.	94

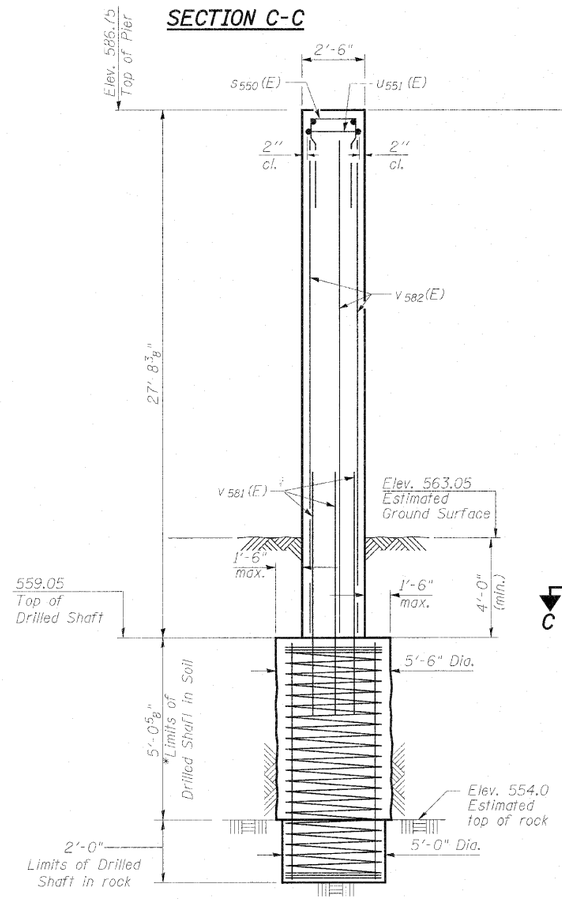

END VIEW

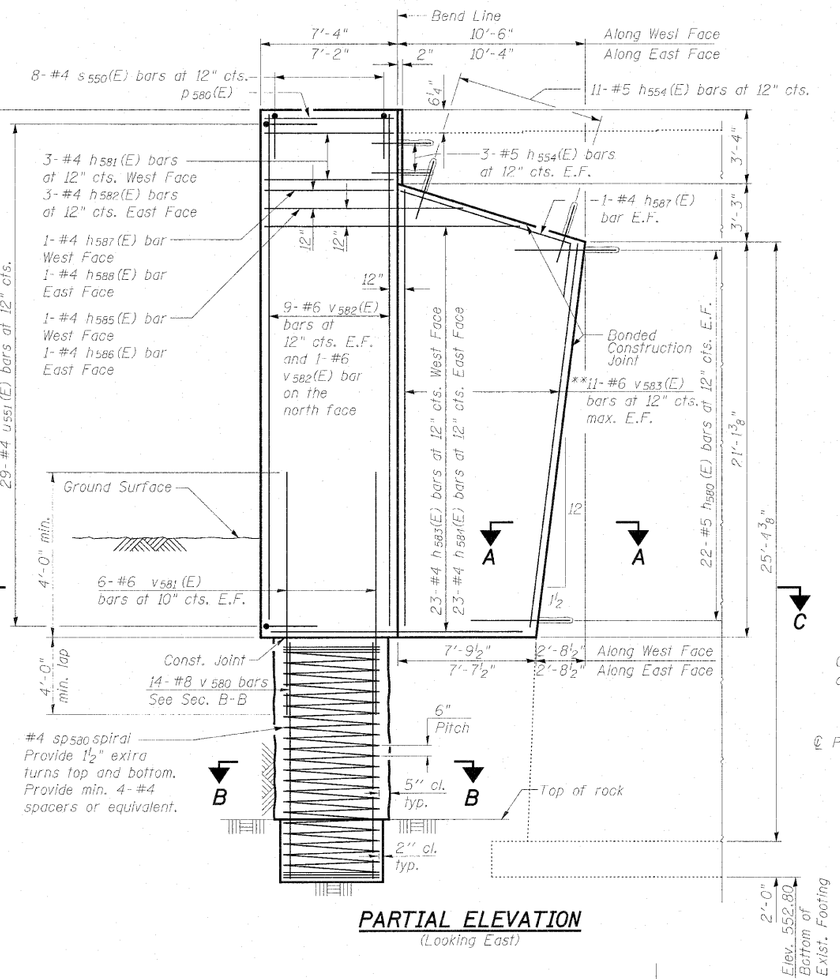

PARTIAL ELEVATION

(Looking East)

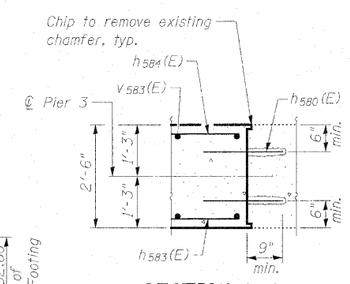

SECTION A-A

Notes:
Space reinforcement in cap to miss anchor bolts.
Allowable soil bearing pressure is 9,000 psf on sound rock.
Epoxy grout h554(E) and h580(E) bars in 9" (min) drilled holes. See Section 584 of the Standard Specifications. Cost of hole drilling and epoxy grouting is included with Reinforcement Bars, Epoxy Coated.
Reinforcement bars that are to be grouted into existing concrete shall be spaced at least 6" from the edge of existing concrete. Contractor shall avoid drilling into existing reinforcement.
Minimum lap for spirals = 2'-0"
***Length is height of spiral.

PIER 3 WIDENING
STRUCTURE NO. 081-0024 (W.B.)
STRUCTURE NO. 081-0025 (E.B.)

* The quantities and reinforcement detailing are based on the top of shaft and the estimated top of rock elevations shown and may change based on the actual top of rock elevation encountered and final top of shaft elevation.

DESIGNED	LAN
CHECKED	SPK
DRAWN	ASJ
CHECKED	SPK

INFRASTRUCTURE ENGINEERING | INCORPORATED
33 West Monroe | Suite 1540 | Chicago, IL 60603
P 312.425.9560 | F 312.425.9564 | www.infrastructure-eng.com

SHEET NO. 62	F.A.I. RTE.	SECTION	COUNTY	TOTAL SHEETS	SHEET NO.
77 SHEETS	280	81-1(VB-1)R	ROCK ISLAND	503	398
			CONTRACT NO. 64815		
	FED. ROAD DIST. NO. _	ILLINOIS	FED. AID PROJECT		

STATE OF ILLINOIS
DEPARTMENT OF TRANSPORTATION

TOP PLAN

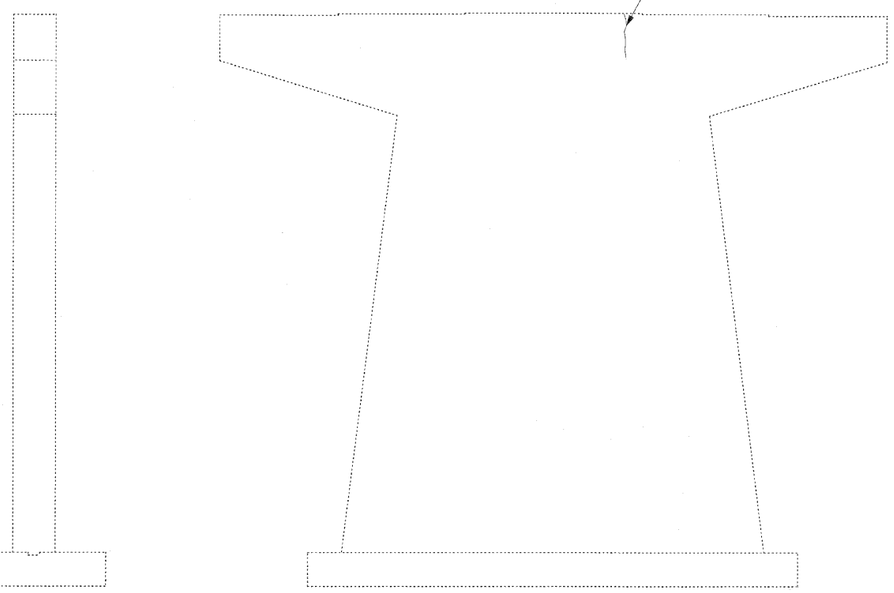

NORTH ELEVATION
(Looking South)

WEST ELEVATION
(Looking East)

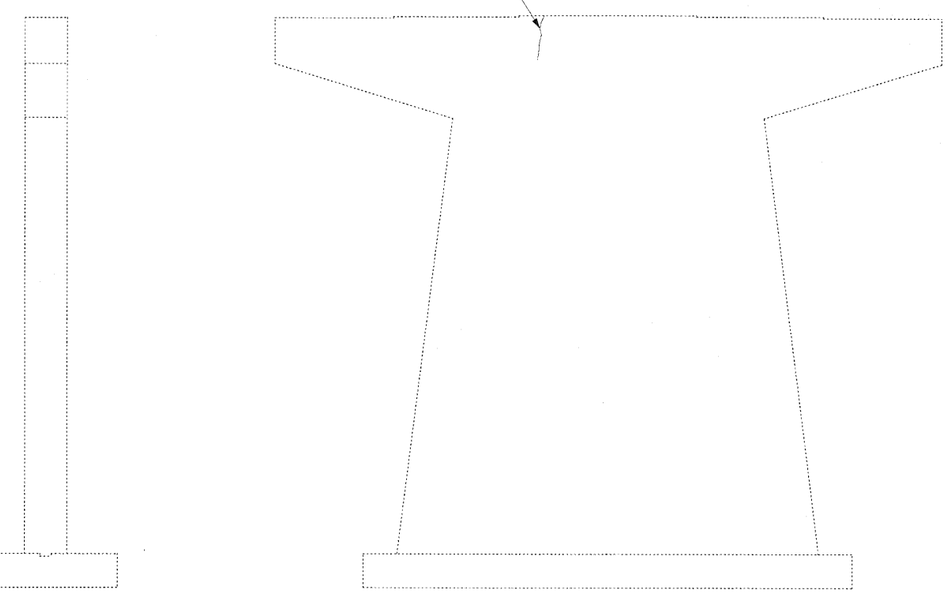

SOUTH ELEVATION
(Looking North)

EAST ELEVATION
(Looking West)

BILL OF MATERIAL

ITEM	UNIT	QUANTITY
Epoxy Crack Injection	Foot	7

PIER 4 REPAIRS
STRUCTURE NO. 081-0024 (W.B.)
STRUCTURE NO. 081-0025 (E.B.)

DESIGNED	
CHECKED	
DRAWN	ASJ
CHECKED	SPK

Note:
Repair of the existing pier shall include but not be limited to the areas shown. The actual areas to be repaired will be determined by the Engineer at the time of construction.

Indicates limits of Epoxy Crack Injection

INFRASTRUCTURE ENGINEERING | INCORPORATED
33 West Monroe | Suite 1540 | Chicago, IL 60603
P 312.425.9560 | F 312.425.9564 | www.infrastructure-eng.com

SHEET NO.63	F.A.I. RTE.	SECTION	COUNTY	TOTAL SHEETS	SHEET NO.
77 SHEETS	280	81-1(VB-1)R	ROCK ISLAND	503	399
			CONTRACT NO. 64815		
	FED. ROAD DIST. NO. _	ILLINOIS	FED. AID PROJECT		

STATE OF ILLINOIS
DEPARTMENT OF TRANSPORTATION

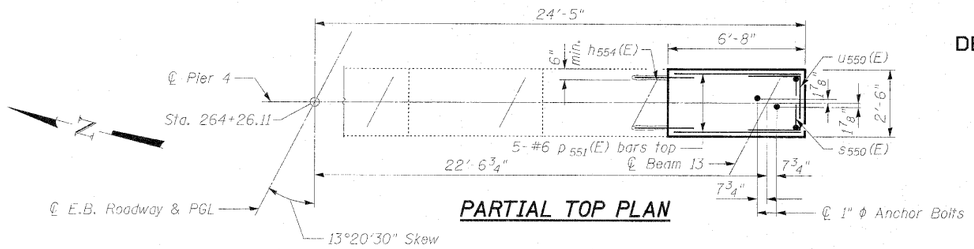

PARTIAL TOP PLAN

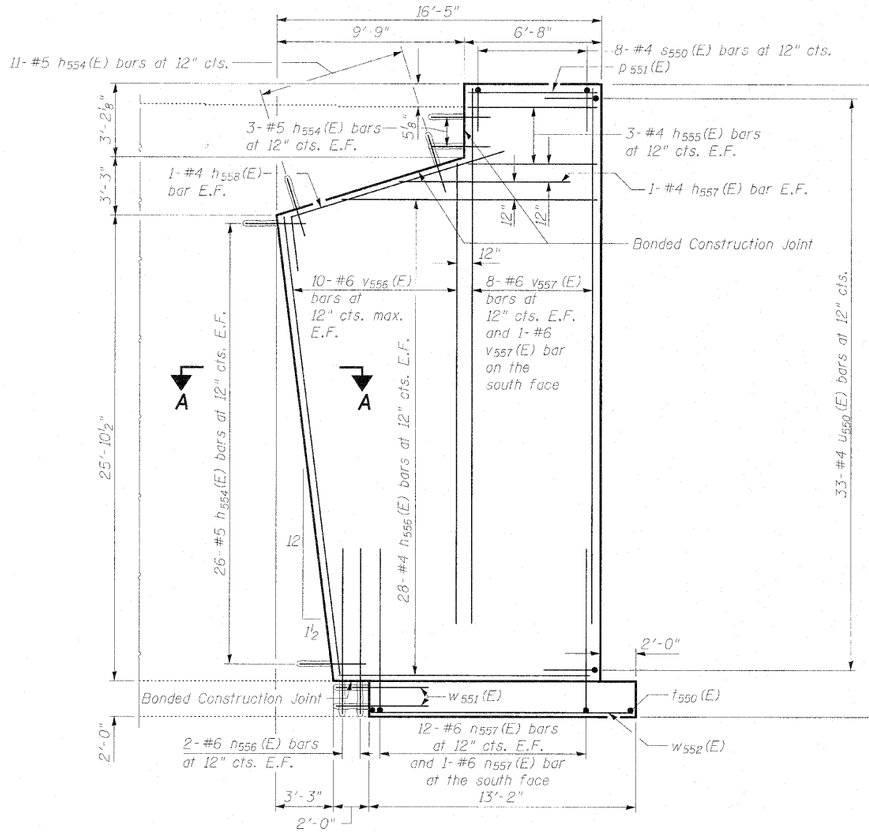

PARTIAL ELEVATION
(Looking East)

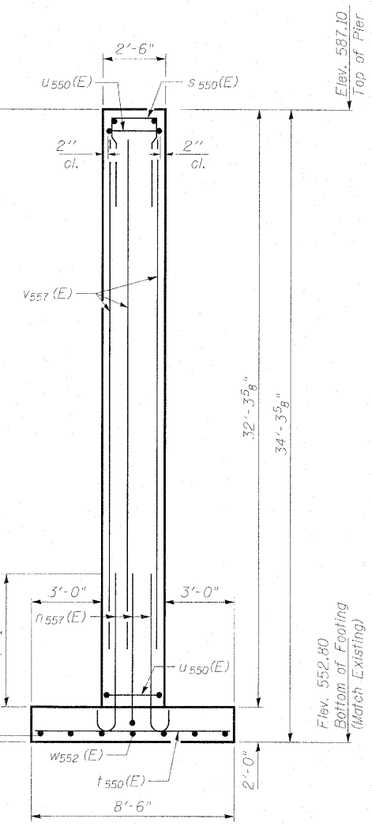

END VIEW

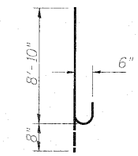

BAR n552(E)

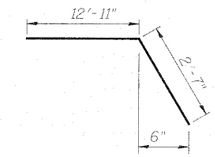

BAR h558(E)

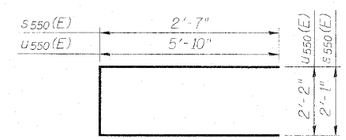

BARS s550(E)
u550(E)

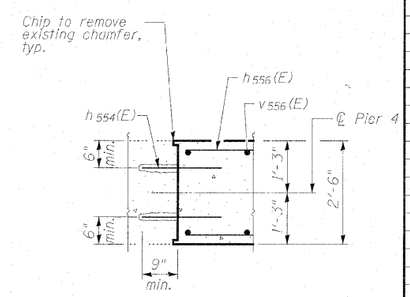

SECTION A-A

BILL OF MATERIAL

Bar	No.	Size	Length	Shape
h554(E)	80	#5	4'-2"	
h555(E)	6	#4	6'-4"	
h556(E)	56	#4	12'-8"	
h557(E)	2	#4	6'-6"	
h558(E)	2	#4	15'-6"	
n556(E)	4	#6	7'-10"	
n557(E)	25	#6	9'-6"	
p551(E)	5	#6	6'-4"	
s550(E)	8	#4	7'-3"	
t550(E)	14	#8	8'-0"	
u550(E)	33	#4	13'-10"	
v556(E)	22	#6	25'-9"	
v557(E)	17	#6	29'-0"	
w551(E)	18	#5	4'-2"	
w552(E)	9	#5	12'-8"	
Structure Excavation			Cu. Yd.	95
Concrete Structures			Cu. Yd.	49.2
Reinforcement Bars, Epoxy Coated			Pound	3,760

Notes:
Space reinforcement in cap to miss anchor bolts.
Allowable soil bearing pressure is 7,500 psf on sound rock.
Epoxy grout h554(E) n556(E) and w551(E) bars in 9" (min) drilled holes. See Section 584 of the Standard Specifications. Cost of hole drilling and epoxy grouting is included with Reinforcement Bars, Epoxy Coated.
Reinforcement bars that are to be grouted into existing concrete shall be spaced at least 6" from the edge of existing concrete. Contractor shall avoid drilling into existing reinforcement.

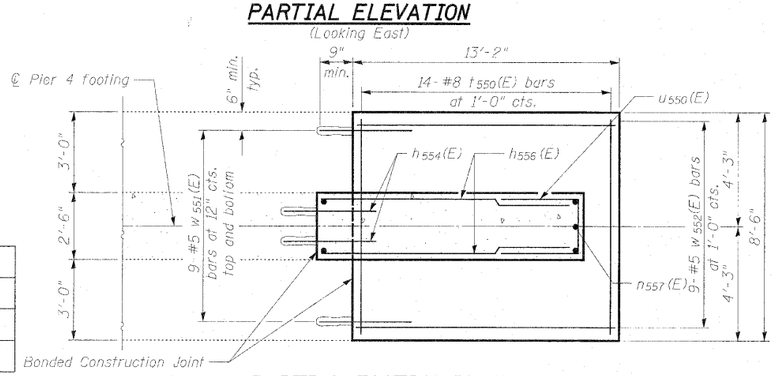

PARTIAL FOOTING PLAN

DESIGNED	LAN
CHECKED	SPK
DRAWN	LAN
CHECKED	SPK

PIER 4 WIDENING
STRUCTURE NO. 081-0024 (W.B.)
STRUCTURE NO. 081-0025 (E.B.)

INFRASTRUCTURE ENGINEERING | INCORPORATED
33 West Monroe | Suite 1540 | Chicago, IL 60603
P 312.425.9560 | F 312.425.9564 | www.infrastructure-eng.com

SHEET NO. 64	F.A.I. RTE.	SECTION	COUNTY	TOTAL SHEETS	SHEET NO.
77 SHEETS	280	81-1(VB-1)R	ROCK ISLAND	503	400
			CONTRACT NO. 64815		
	FED. ROAD DIST. NO. _	ILLINOIS	FED. AID PROJECT		