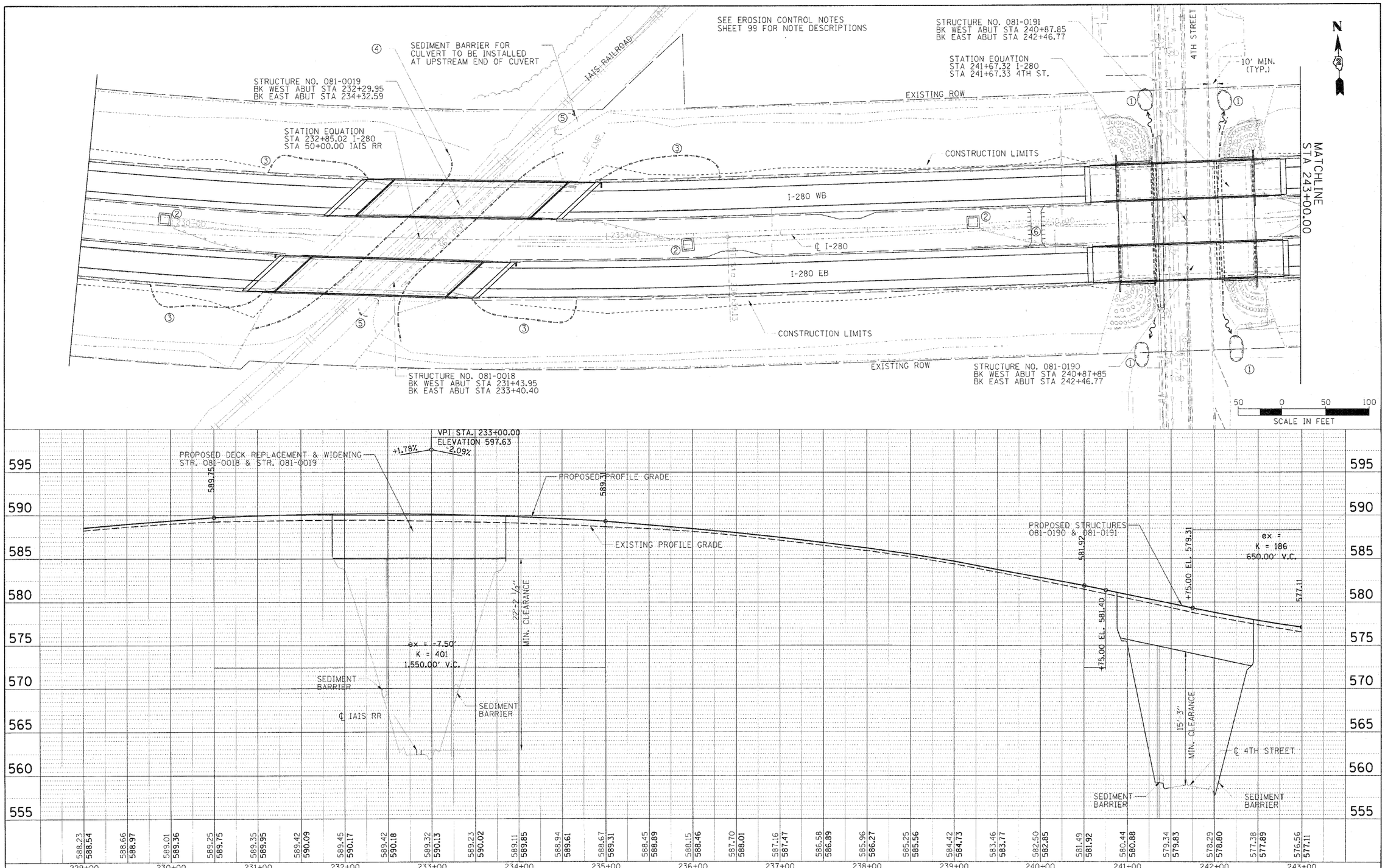

FILE NAME =	USER NAME =	DESIGNED - CRC	REVISED -
		DRAWN - JDM	REVISED -
MODEL NAME =	PLOT SCALE =	CHECKED - CRC	REVISED -
	PLOT DATE =	DATE - 07/23/10	REVISED -

STATE OF ILLINOIS
DEPARTMENT OF TRANSPORTATION

I-280
EROSION CONTROL PLAN
STAGE I PLAN

SCALE: 1" = 50' | SHEET NO. OF SHEETS | STA. 229+00.00 TO STA. 243+00.00

F.A. RTE.	SECTION	COUNTY	TOTAL SHEETS	SHEET NO.
280	81-1/B-1,4B,HB-1,HB-2,VB,VB-1R	ROCK ISLAND	503	101

CONTRACT NO. 64815

7 ILLINOIS FED. AID PROJECT 7

HANSON
Hanson Professional Services Inc.

SEE EROSION CONTROL NOTES
SHEET 99 FOR NOTE DESCRIPTIONS

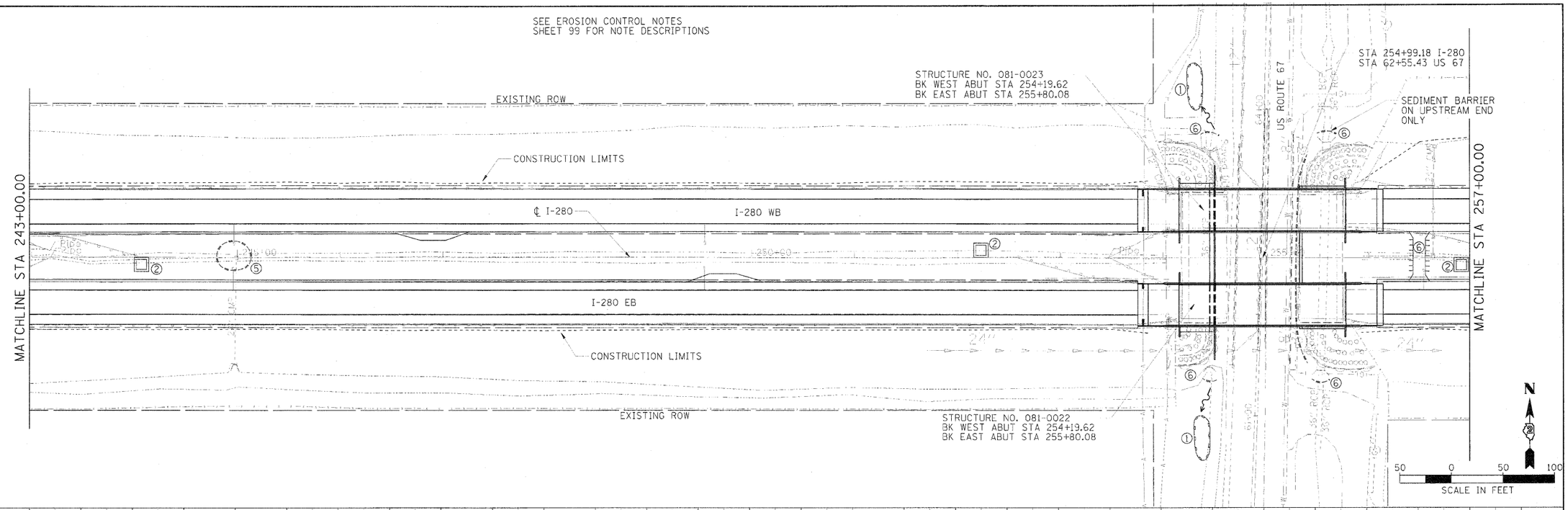

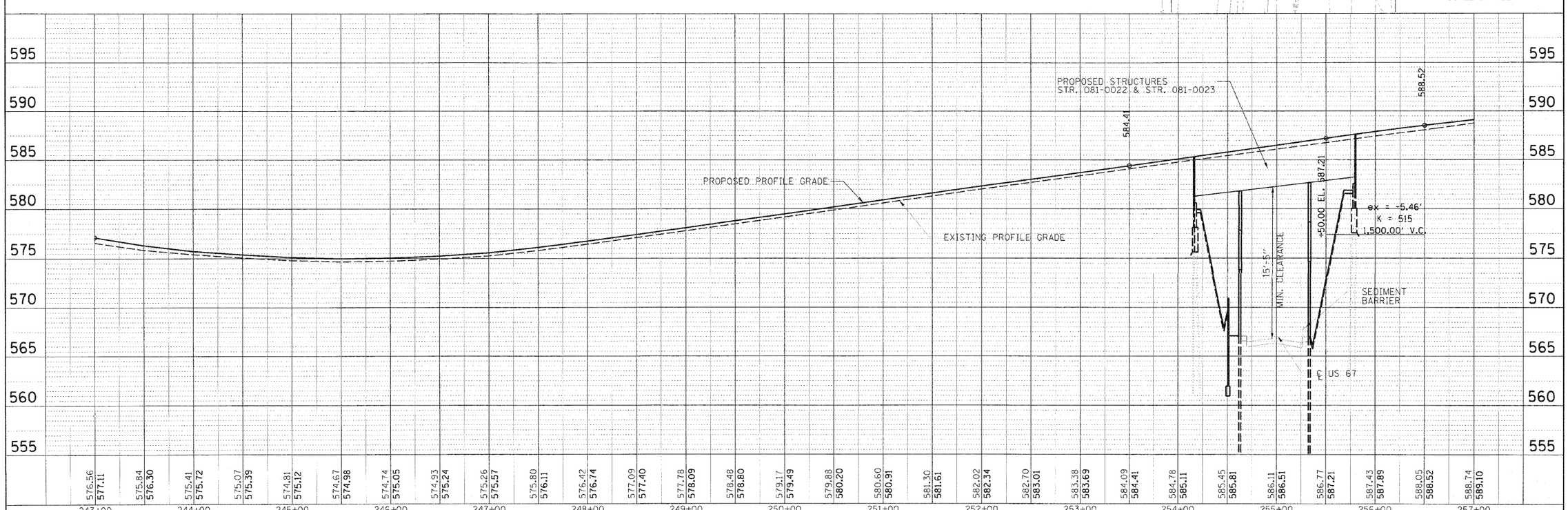

FILE NAME = 0254815-sheetedsdgn	USER NAME = nada-22377	DESIGNED - CRC	REVISED -	**STATE OF ILLINOIS** **DEPARTMENT OF TRANSPORTATION**
MODEL NAME = I280 ECP 24		DRAWN - JDM	REVISED -	
	PLOT SCALE = 50.0000 ' / in.	CHECKED - CRC	REVISED -	
	PLOT DATE = 07/23/2012	DATE - 07/23/10	REVISED -	

I-280
EROSION CONTROL PLAN
STAGE I PLAN

SCALE: 1" = 50' | SHEET NO. OF SHEETS | STA. 243+00.00 TO STA. 257+00.00

F.A. RTE.	SECTION	COUNTY	TOTAL SHEETS	SHEET NO.
280	81-1(B-1,VB,HB-1,HB-2,VB,VB-1)R	ROCK ISLAND	503	102

CONTRACT NO. 64815

7 | ILLINOIS | FED. AID PROJECT 7

PLAN
SURVEYED
PLOTTED
DRAWN
CHECKED
NOTE BOOK
NO.
SIGNATURE
TITLE
FIELD OFFICE
DATE
BY
PROFILE
SURVEYED
PLOTTED
DRAWN
CHECKED
NOTE BOOK
NO.
SIGNATURE
TITLE
FIELD OFFICE
DATE
BY

HANSON
Hanson Professional Services Inc.

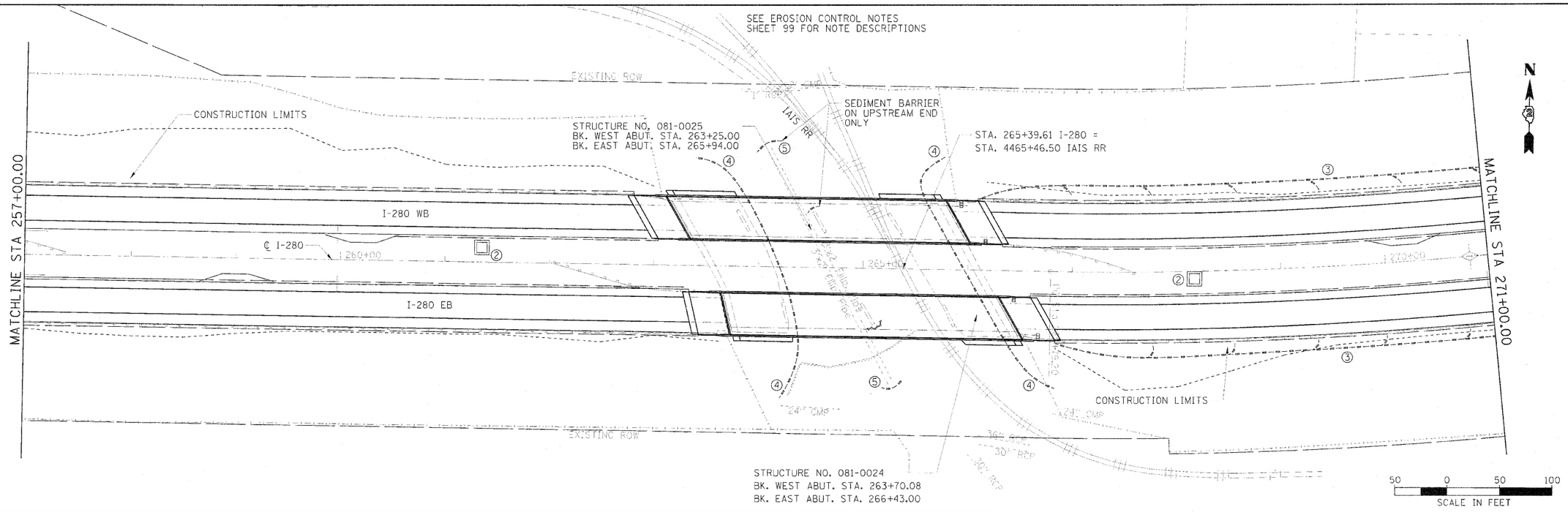

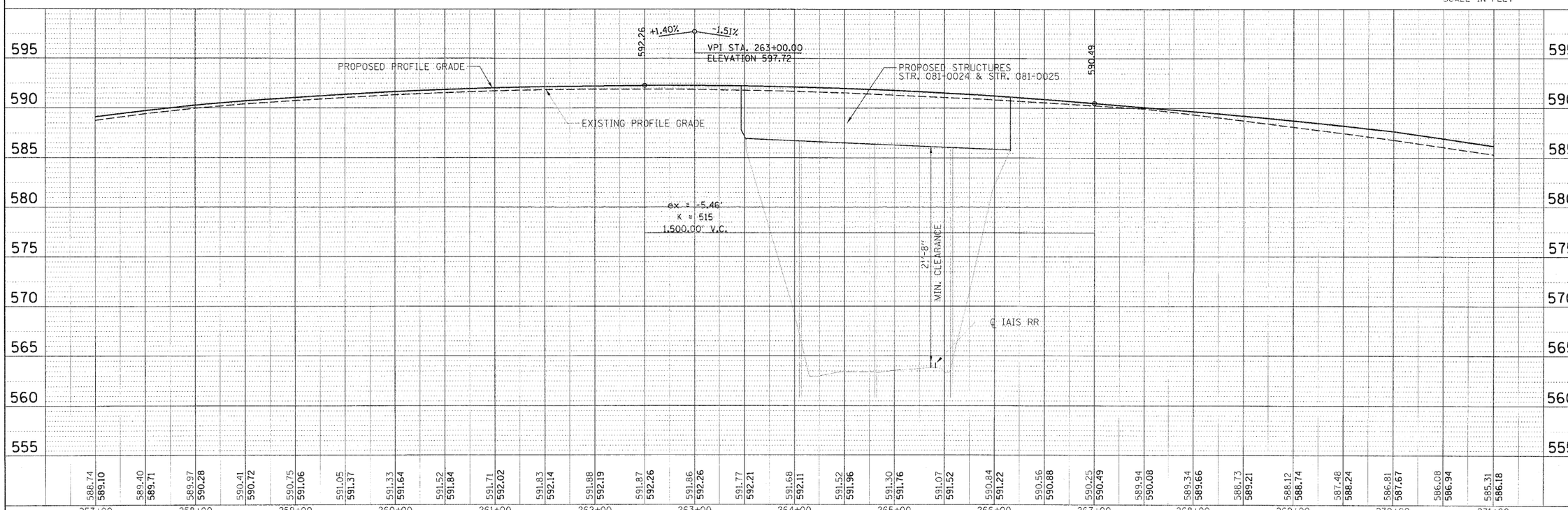

FILE NAME = 0264015-shanbaugh.dgn	USER NAME = mooo-82377	DESIGNED - CRC	REVISED -	**STATE OF ILLINOIS**
MODEL NAME =		DRAWN - JDM	REVISED -	**DEPARTMENT OF TRANSPORTATION**
1202 ECP 25	PLOT SCALE = 52.0000 ' / in.	CHECKED - CRC	REVISED -	
	PLOT DATE = 07\23\2010	DATE - 07/23/10	REVISED -	

I-280
EROSION CONTROL PLAN
STAGE I PLAN

SCALE: 1" = 50' | SHEET NO. OF SHEETS | STA. 257+00.00 TO STA. 271+00.00

F.A. RTE.	SECTION	COUNTY	TOTAL SHEETS	SHEET NO.
280	81-1/5-1,1/6,1/8-1,1/8-2,VB,VB-1,R	ROCK ISLAND	503	103
		CONTRACT NO. 64815		
		7 ILLINOIS FED. AID PROJECT 7		

PLAN | SURVEYED | PLOTTED | ALIGNMENT CHECKED | INT. OR RAY CHECKED | CADD FILE NAME | NOTE BOOK | NO. | DATE

PROFILE | SURVEYED | PLOTTED | GRADES CHECKED | STRUCTURE NOTATNS CHKD | NOTE BOOK | NO. | BY | DATE

HANSON Professional Services Inc.

SEE EROSION CONTROL NOTES
SHEET 99 FOR NOTE DESCRIPTIONS

MATCHLINE STA 271+00.00

MATCHLINE STA 285+00.00

EXISTING ROW

LEVEE

I-280 WB

℄ I-280

I-280 EB

CONSTRUCTION LIMITS

N

50 0 50 100
SCALE IN FEET

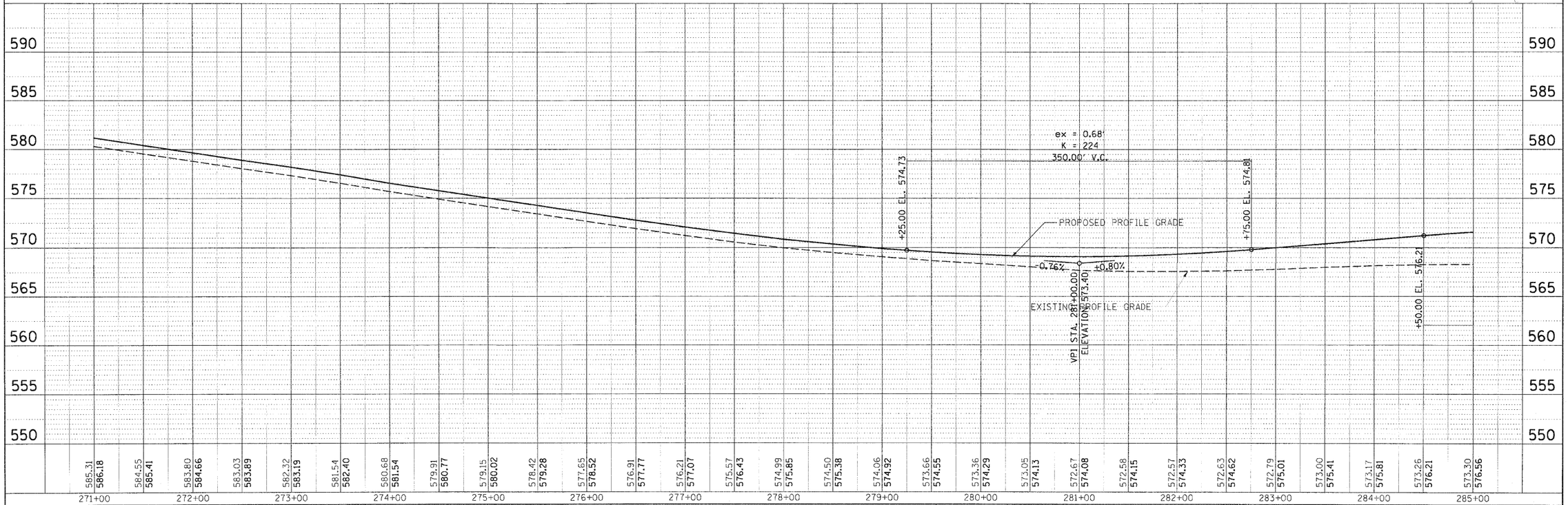

FILE NAME = D:\2640\C-phase2\ch2.dgn	USER NAME = moba-80377	DESIGNED - CRC	REVISED -	STATE OF ILLINOIS DEPARTMENT OF TRANSPORTATION
MODEL NAME = 1280 SCP 26		DRAWN - JDM	REVISED -	
	PLOT SCALE = 50.0000 ' / in.	CHECKED - CRC	REVISED -	
	PLOT DATE = 07\23\2010	DATE - 07/23/10	REVISED -	

I-280
EROSION CONTROL PLAN
STAGE I PLAN

SCALE: 1" = 50' | SHEET NO. OF SHEETS | STA. 271+00.00 TO STA. 285+00.00

F.A. RTE.	SECTION	COUNTY	TOTAL SHEETS	SHEET NO.
280	81-1(B-1,HB,VB-1,HB-2,VB,VB-1)R	ROCK ISLAND	503	104
		CONTRACT NO. 64815		
	7 ILLINOIS FED. AID PROJECT 7			

PLAN: SURVEYED / PLOTTED / STAKED / CHECKED / R.O.W. CHECKED / P.L.S. NAME
NOTE BOOK NO. / PAGE NO.
DATE

PROFILE: SURVEYED / PLOTTED / STAKED / CHECKED / PLOTTED NOTATIONS CHKD
NOTE BOOK NO.
BY / DATE

HANSON
Hanson Professional Services Inc.

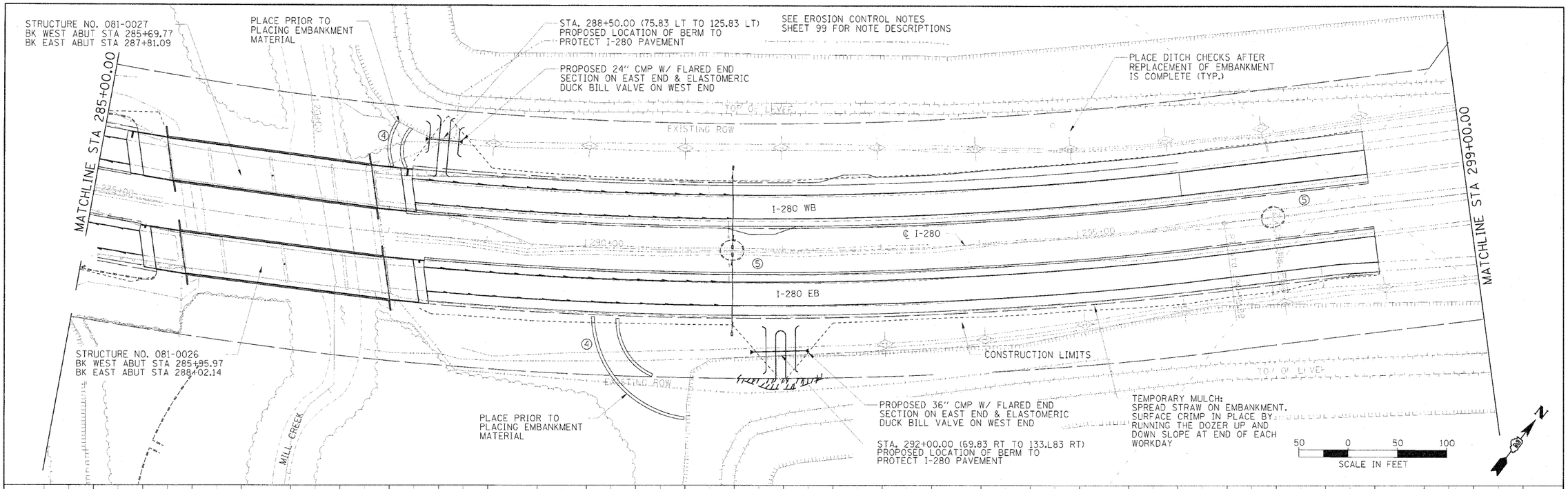

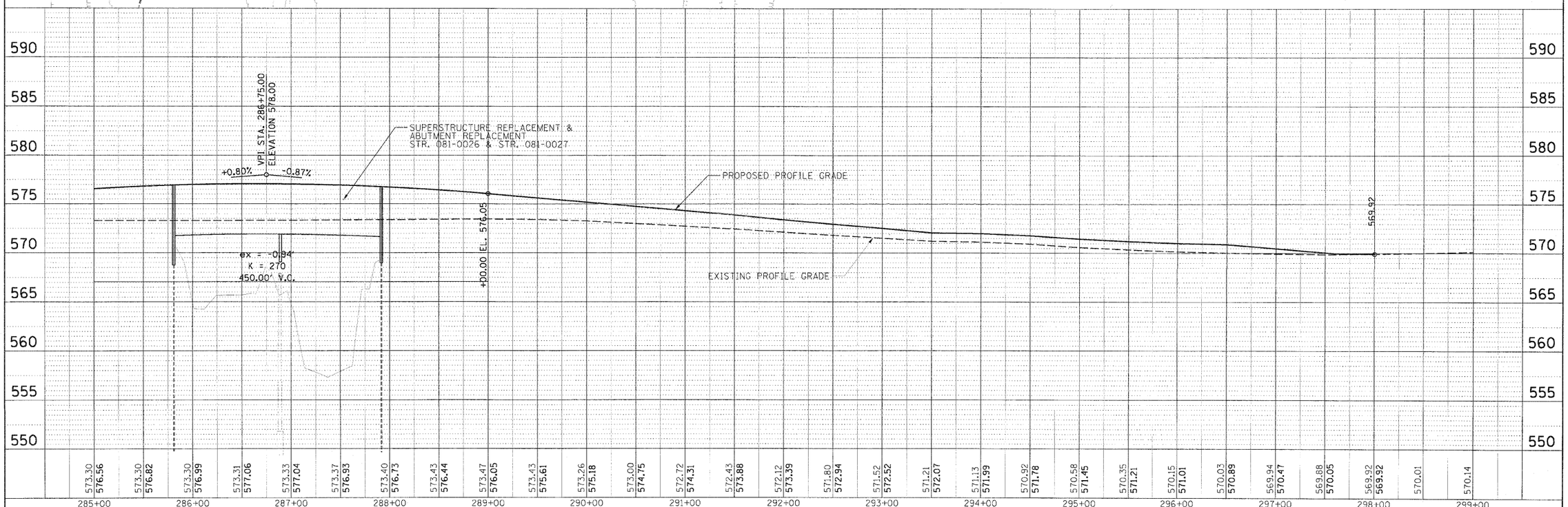

FILE NAME = 0264015-sheet01.dgn	USER NAME = meder00377	DESIGNED - CRC	REVISED -
MODEL NAME = 1280 SEP 27		DRAWN - JDM	REVISED -
	PLOT SCALE = 52.0000 ' / in.	CHECKED - CRC	REVISED -
	PLOT DATE = 07/23/2010	DATE - 07/23/10	REVISED -

STATE OF ILLINOIS
DEPARTMENT OF TRANSPORTATION

I-280
EROSION CONTROL PLAN
STAGE I PLAN

SCALE: 1" = 50' | SHEET NO. OF SHEETS | STA. 285+00.00 TO STA. 299+00.00

F.A. RTE.	SECTION	COUNTY	TOTAL SHEETS	SHEET NO.
280	81-1IB-1,HB,VB-1,HB-2,VB,VB-1R	ROCK ISLAND	503	105

CONTRACT NO. 64815

7 ILLINOIS FED. AID PROJECT 7

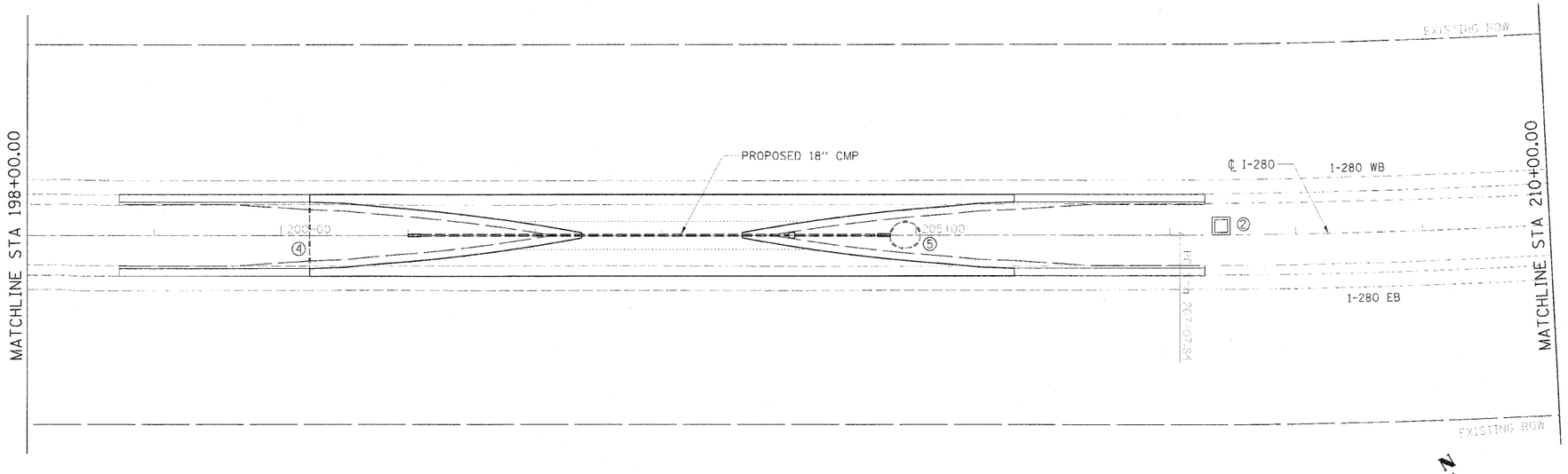

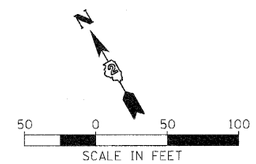

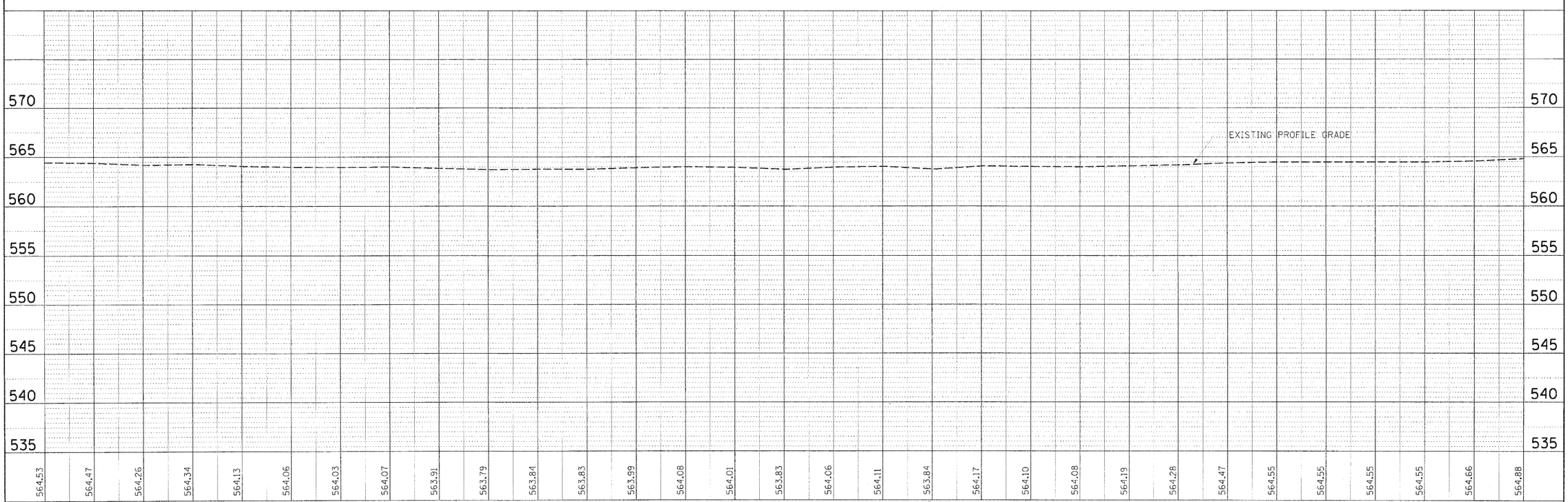

PLAN	SURVEYED	BY	DATE
NOTE BOOK	PLOTTED		
NO.	ALIGNMENT CHECKED		
	RT. OF WAY CHECKED		
	CADD FILE NAME		

HANSON
Hanson Professional Services Inc.

PROFILE	SURVEYED	BY	DATE
NOTE BOOK	PLOTTED		
NO.	GRADES CHECKED		
	B.M. NOTED		
	STRUCTURE NOTAT'NS CHK'D		

FILE NAME =	USER NAME = madar00377	DESIGNED - CRC	REVISED -
0264815-shshecpzc8qpcn		DRAWN - JDM	REVISED -
MODEL NAME =	PLOT SCALE = 50.0000 ' / in.	CHECKED - CRC	REVISED -
I280 PP Z1	PLOT DATE = 07\22\2010	DATE - 07/23/10	REVISED -

STATE OF ILLINOIS
DEPARTMENT OF TRANSPORTATION

I-280
EROSION CONTROL PLAN
STAGE I PLAN

SCALE: 1" = 50' | SHEET NO. OF SHEETS | STA. 200+00.00 TO STA. 215+00.00

F.A. RTE.	SECTION	COUNTY	TOTAL SHEETS	SHEET NO.
280	81-1(B-1,HB,HB-1,HB-2,VB,VB-1)R	ROCK ISLAND	503	106
		CONTRACT NO. 64815		

7 ILLINOIS FED. AID PROJECT 7

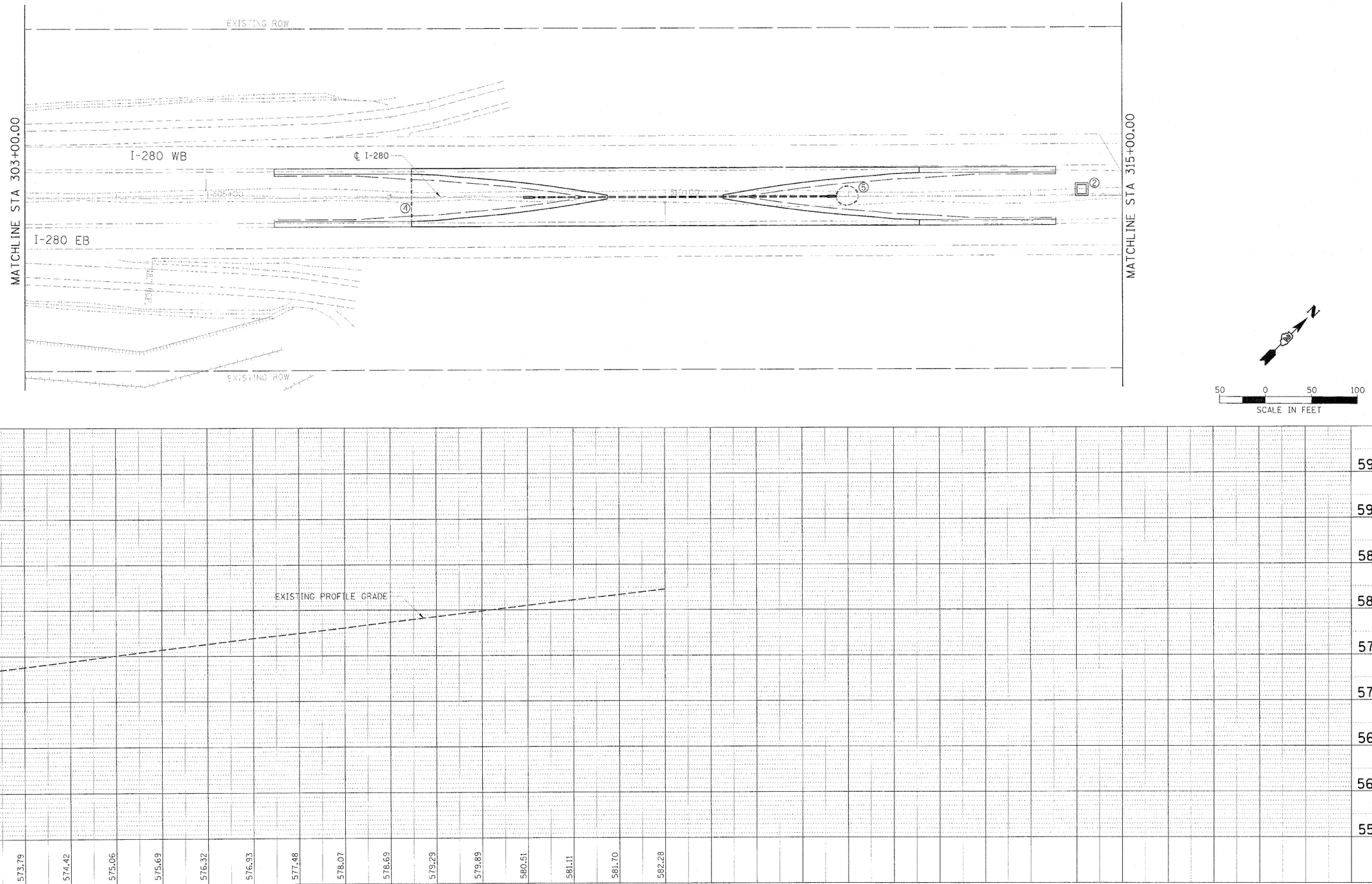

HANSON
Hanson Professional Services Inc.

FILE NAME = D284815-shanoca28.dgn	USER NAME = meab-82377	DESIGNED - CRC	REVISED -	STATE OF ILLINOIS DEPARTMENT OF TRANSPORTATION	I-280 EROSION CONTROL PLAN STAGE I PLAN
MODEL NAME = I280 EP 04		DRAWN - JDM	REVISED -		
	PLOT SCALE = 50.0000 ' / in.	CHECKED - CRC	REVISED -		
	PLOT DATE = 27\23\2012	DATE - 07/23/10	REVISED -		SCALE: 1" = 50' SHEET NO. OF SHEETS STA. 299+00.00 TO STA. 313+00.00

F.A. RTE.	SECTION	COUNTY	TOTAL SHEETS	SHEET NO.
280	8I-1(B-1,HB,HB-1,HB-2,VB,VB-1)R	ROCK ISLAND	503	107
		CONTRACT NO. 64815		
7	ILLINOIS FED. AID PROJECT 7			

FILE NAME = 0264815-trailbikeerosion	USER NAME - modot00377	DESIGNED - CRC	REVISED -
MODEL NAME = Bike Path		DRAWN - JDM	REVISED -
	PLOT SCALE = 50.000' / in.	CHECKED - CRC	REVISED -
	PLOT DATE = 07/23/2010	DATE - 07/23/10	REVISED -

STATE OF ILLINOIS
DEPARTMENT OF TRANSPORTATION

MILL CREEK BIKE PATH
EROSION CONTROL PLAN

SCALE: 1" = 50' SHEET NO. OF SHEETS STA. 95+00 TO STA. 102+12

F.A. RTE.	SECTION	COUNTY	TOTAL SHEETS	SHEET NO.
280	81-1HB-1,HB,HB-1,HB-2,VB,VB-1IR	ROCK ISLAND	503	108

CONTRACT NO. 64815

7 ILLINOIS FED. AID PROJECT 7

PLAN
PROFILE
NOTE BOOK NO.
SCHEMATIC
FIELDWORK
PLANS PREPARED
PLANS CHECKED
STRUCTURE NOTATIONS CHKD
BY DATE

HANSON
Hanson Professional Services Inc.

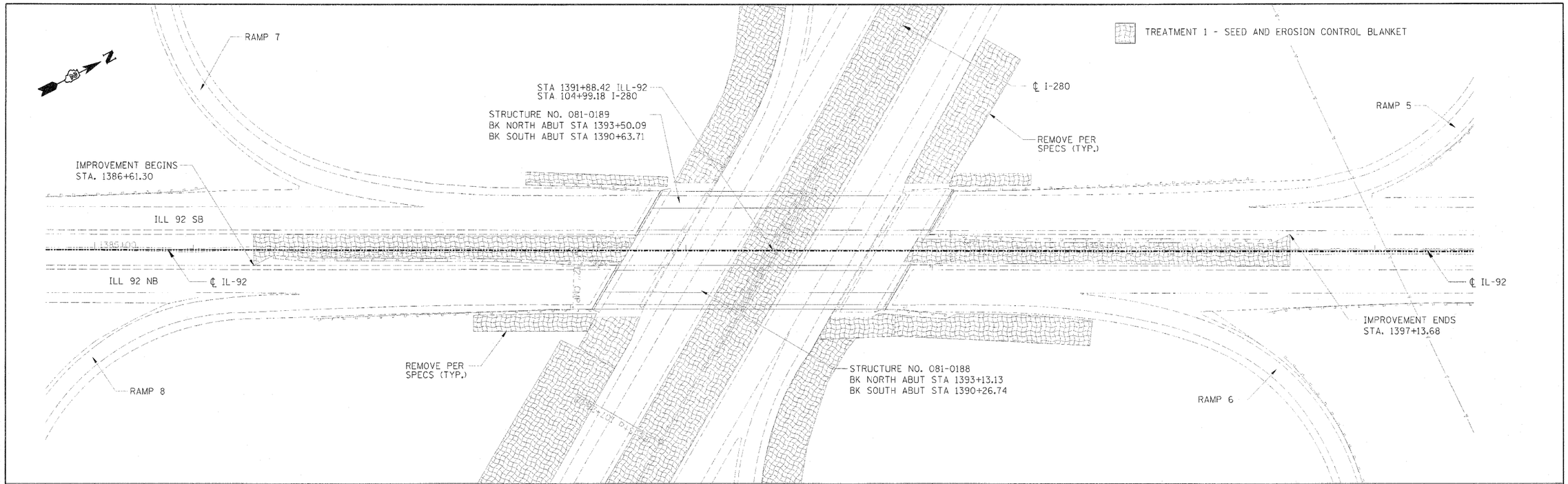

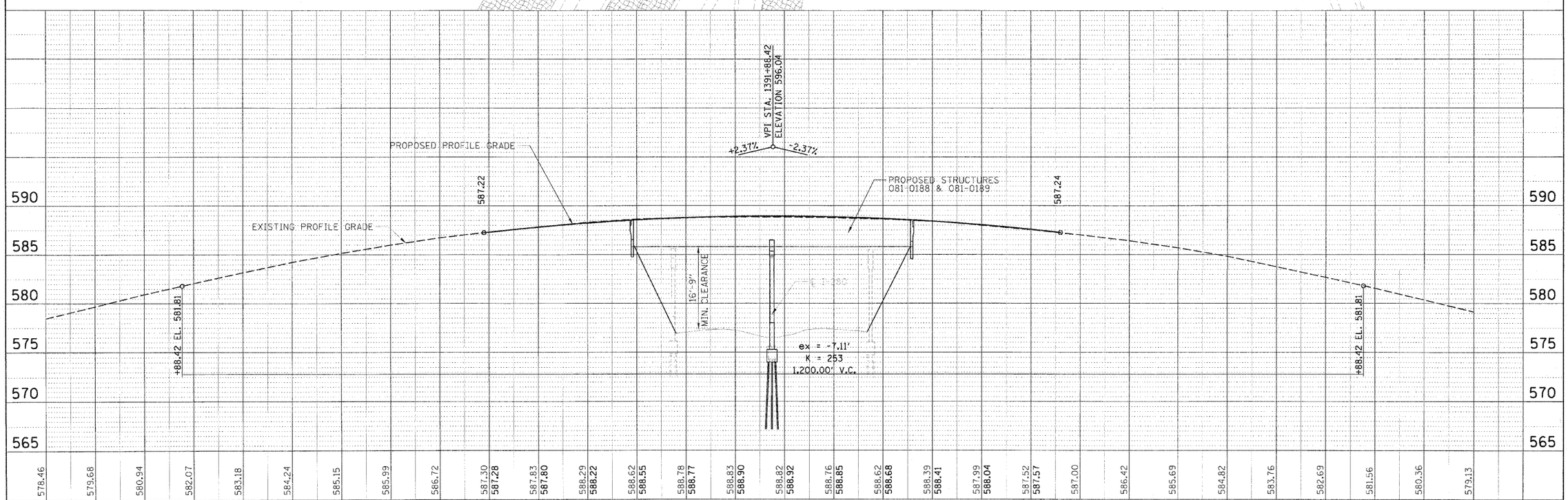

FILE NAME = 0264912-sheetmetadata.dgn	USER NAME = mcdo-00377	DESIGNED - CRC	REVISED -
		DRAWN - JDM	REVISED -
MODEL NAME = IL 92 LCP2 02	PLOT SCALE = 50.0000 ' / in.	CHECKED - CRC	REVISED -
	PLOT DATE = 07/23/2010	DATE - 07/23/10	REVISED -

STATE OF ILLINOIS
DEPARTMENT OF TRANSPORTATION

ILLINOIS ROUTE 92
RESTORATION PLAN
STAGE II PLAN

SCALE: 1" = 50' | SHEET NO. OF SHEETS | STA. 1384+50.00 TO STA. 1399+00.00

F.A. RTE.	SECTION	COUNTY	TOTAL SHEETS	SHEET NO.
	81-1HB-1,HB,HB-1,HB-2,VB,VB-1R	ROCK ISLAND	503	109
		CONTRACT NO. 64815		
7	ILLINOIS FED. AID PROJECT 7			

PLAN | SURVEYED | PLOTTED | DRAWN BY | CHECKED BY | DY | DATE | NOTE BOOK NO. | CADD FILE NAME

PROFILE | SURVEYED | PLOTTED | DRAWN BY | CHECKED BY | NOTE BOOK NO. | STRUCTURE NOTATIONS CHKD | BY | DATE

HANSON
Hanson Professional Services Inc.

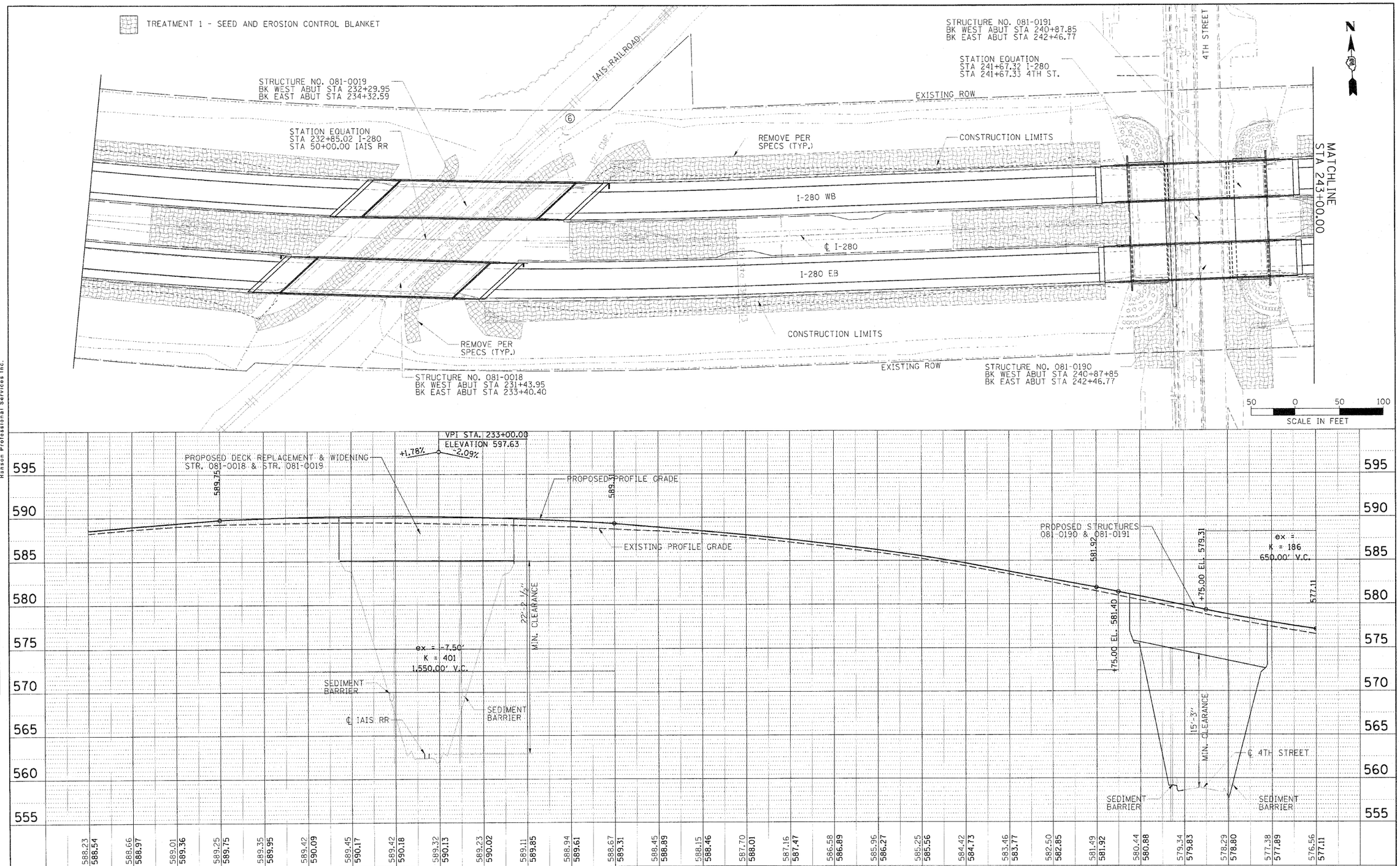

FILE NAME = 1284015-sheet2sscaledgn	USER NAME = mace-22377	DESIGNED - CRC	REVISED -
MODEL NAME =		DRAWN - JDM	REVISED -
1280 SCP2 03	PLOT SCALE = 50.0000 ' / in.	CHECKED - CRC	REVISED -
	PLOT DATE = 07/23/2010	DATE - 07/23/2010	REVISED -

STATE OF ILLINOIS
DEPARTMENT OF TRANSPORTATION

I-280
RESTORATION PLAN
STAGE II PLAN

SCALE: 1" = 50' SHEET NO. OF SHEETS STA. 229+00.00 TO STA. 243+00.00

F.A. RTE.	SECTION	COUNTY	TOTAL SHEETS	SHEET NO.
280	81-1KB-1,HB,HB-1,HB-2,VB,VB-1,R	ROCK ISLAND	503	110
		CONTRACT NO. 64815		
	7 ILLINOIS FED. AID PROJECT 7			

PLAN
NOTE BOOK NO.
SURVEYED
R.O.W. MARKS FOUND
R.L. OF R.O.W. CHECKED
CADD FILE NAME

PROFILE
SURVEYED
PLOTTED
GRADES CHECKED
B.M. NOTED
STRUCTURE NOTATNS CHKD

NO.	BY	DATE

HANSON
Hanson Professional Services Inc.

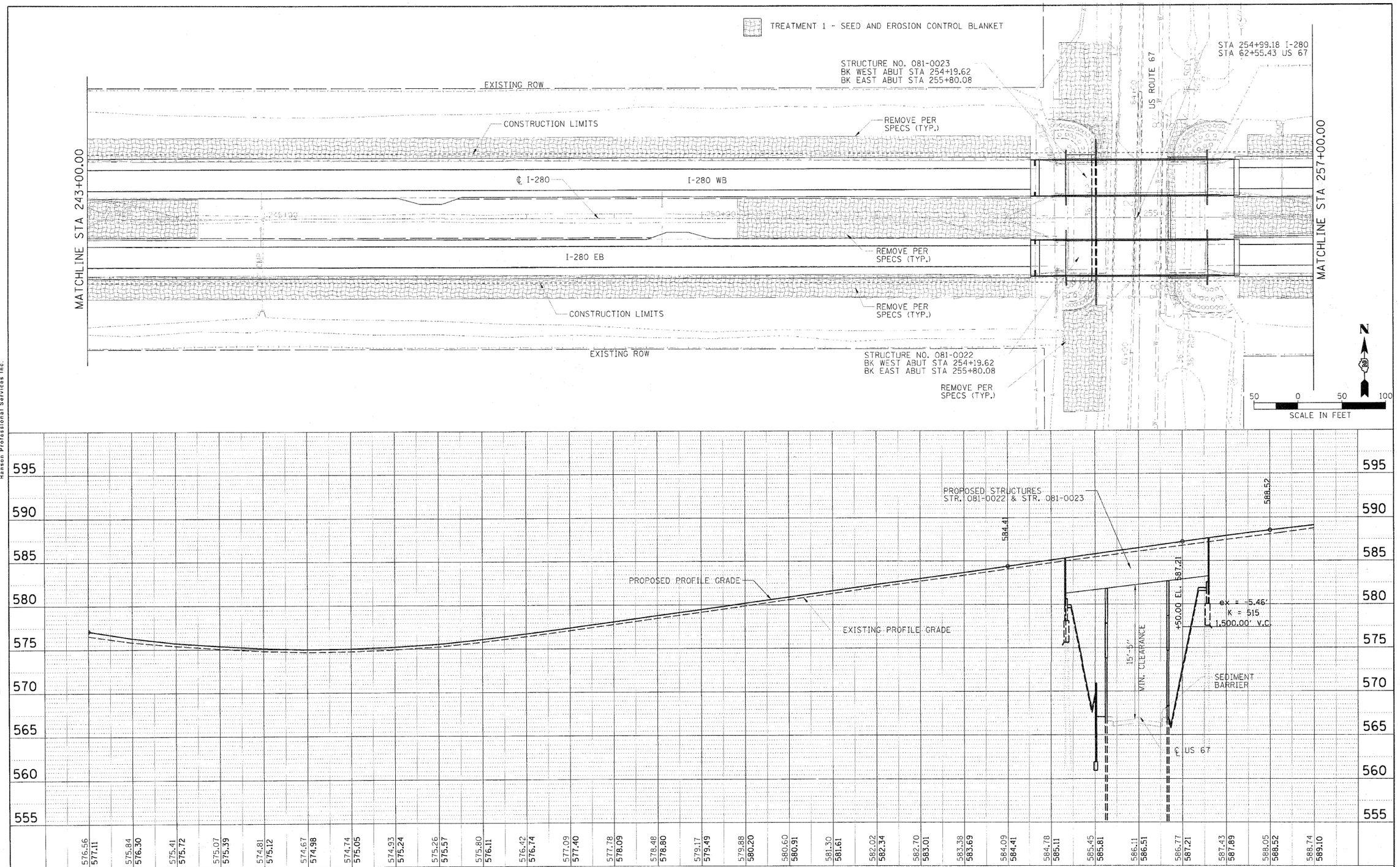

FILE NAME = c264815-stageiiseedplan	USER NAME = mcdor00677	DESIGNED - CRC	REVISED -
		DRAWN - JDM	REVISED -
MODEL NAME =	PLOT SCALE = 50.0000 ' / in.	CHECKED - CRC	REVISED -
1280 ECP2 04	PLOT DATE = 27\22\23.0	DATE - 07/23/10	REVISED -

STATE OF ILLINOIS
DEPARTMENT OF TRANSPORTATION

I-280
RESTORATION PLAN
STAGE II PLAN

SCALE: 1" = 50' | SHEET NO. OF SHEETS | STA. 243+00.00 TO STA. 257+00.00

F.A. RTE.	SECTION	COUNTY	TOTAL SHEETS	SHEET NO.
280	8(-1)B-1,H-B,HB-1,HB-2,VB,VB-1)R	ROCK ISLAND	503	111

CONTRACT NO. 64815

7 ILLINOIS FED. AID PROJECT 7

PLAN — SURVEYED / PLOTTED / GRADES CHECKED / STRUCTURE NOTATIONS CHKD / NOTE BOOK / NO. / DATE / BY / REVISION

PROFILE — SURVEYED / PLOTTED / GRADES CHECKED / STRUCTURE NOTATIONS CHKD / NOTE BOOK / NO. / DATE / BY

HANSON
Hanson Professional Services Inc.

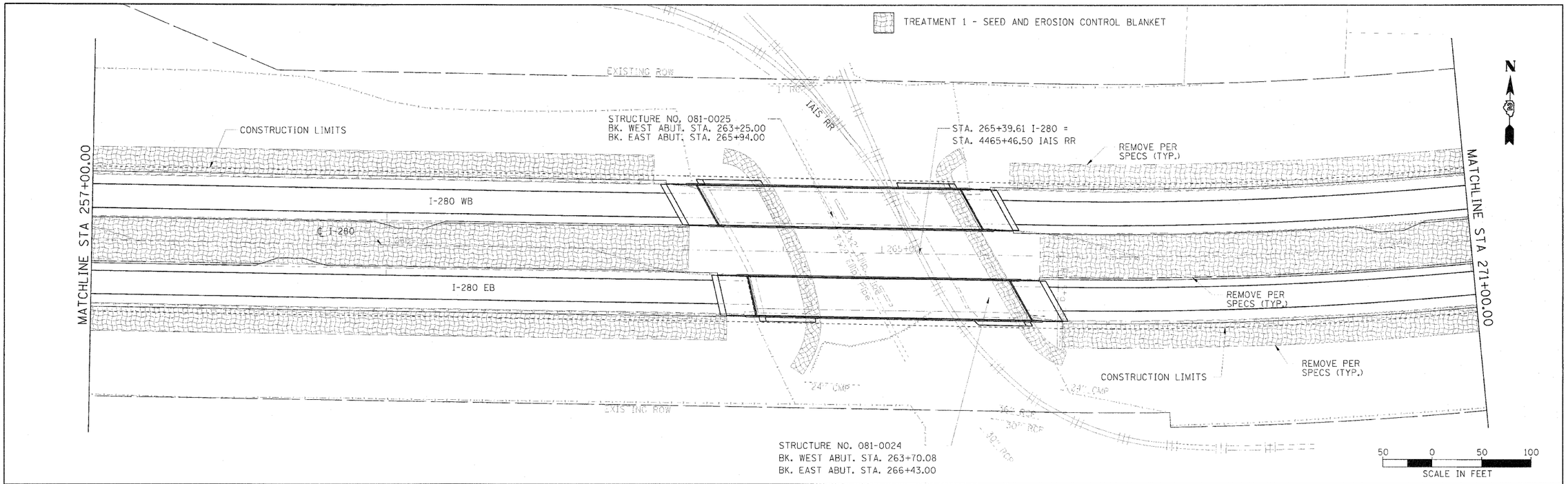

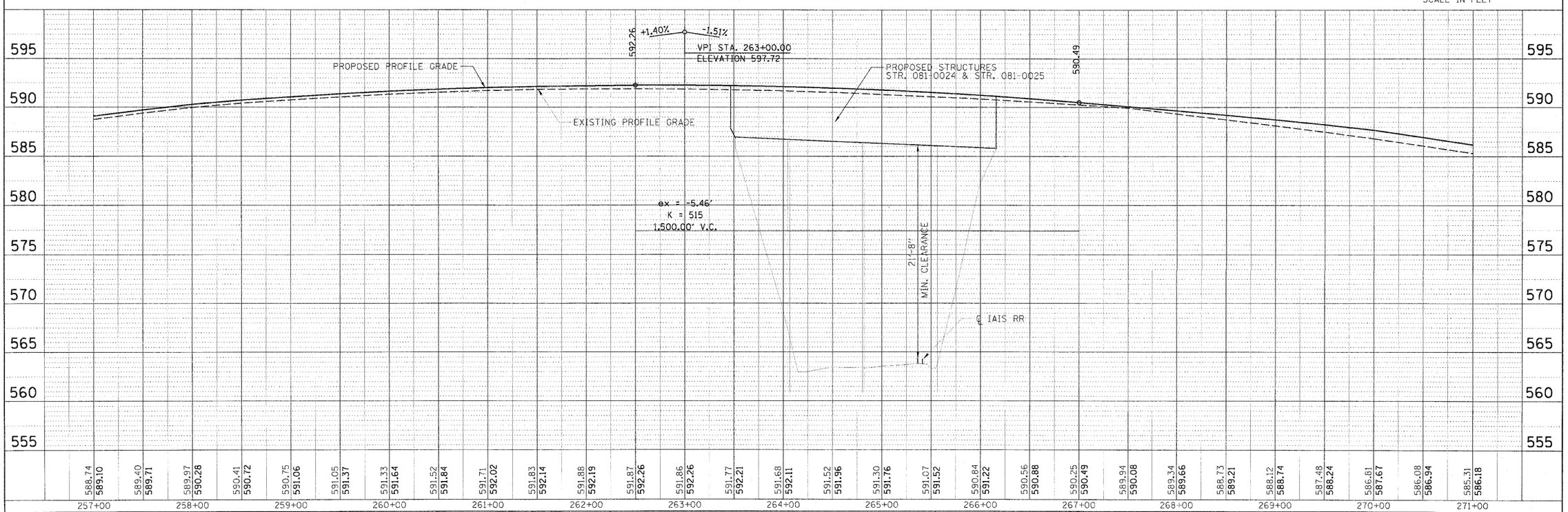

FILE NAME = 0280315-sht-sec-sdp-sign	USER NAME = mader02377	DESIGNED - CRC	REVISED -
MODEL NAME =		DRAWN - JDM	REVISED -
1280 EGP2 05	PLOT SCALE = 50.0000 / in.	CHECKED - CRC	REVISED -
	PLOT DATE = 7/23/2010	DATE - 07/23/10	REVISED -

STATE OF ILLINOIS
DEPARTMENT OF TRANSPORTATION

I-280
RESTORATION PLAN
STAGE II PLAN

SCALE: 1" = 50' | SHEET NO. OF SHEETS | STA. 257+00.00 TO STA. 271+00.00

F.A. RTE.	SECTION	COUNTY	TOTAL SHEETS	SHEET NO.
280	81-1(B-1,HB,HB-1,HB-2,VB,VB-1)R	ROCK ISLAND	503	112

CONTRACT NO. 64815

7 ILLINOIS FED. AID PROJECT 7

PLAN | SEAL/NOTE BOOK | NOTE BOOK NO. | SEAL/NOTE BOOK NO. | BY | DATE

PROFILE | SEAL/NOTE BOOK | NOTE BOOK NO. | SEAL/NOTE BOOK NO. | BY | DATE

HANSON
Hanson Professional Services Inc.

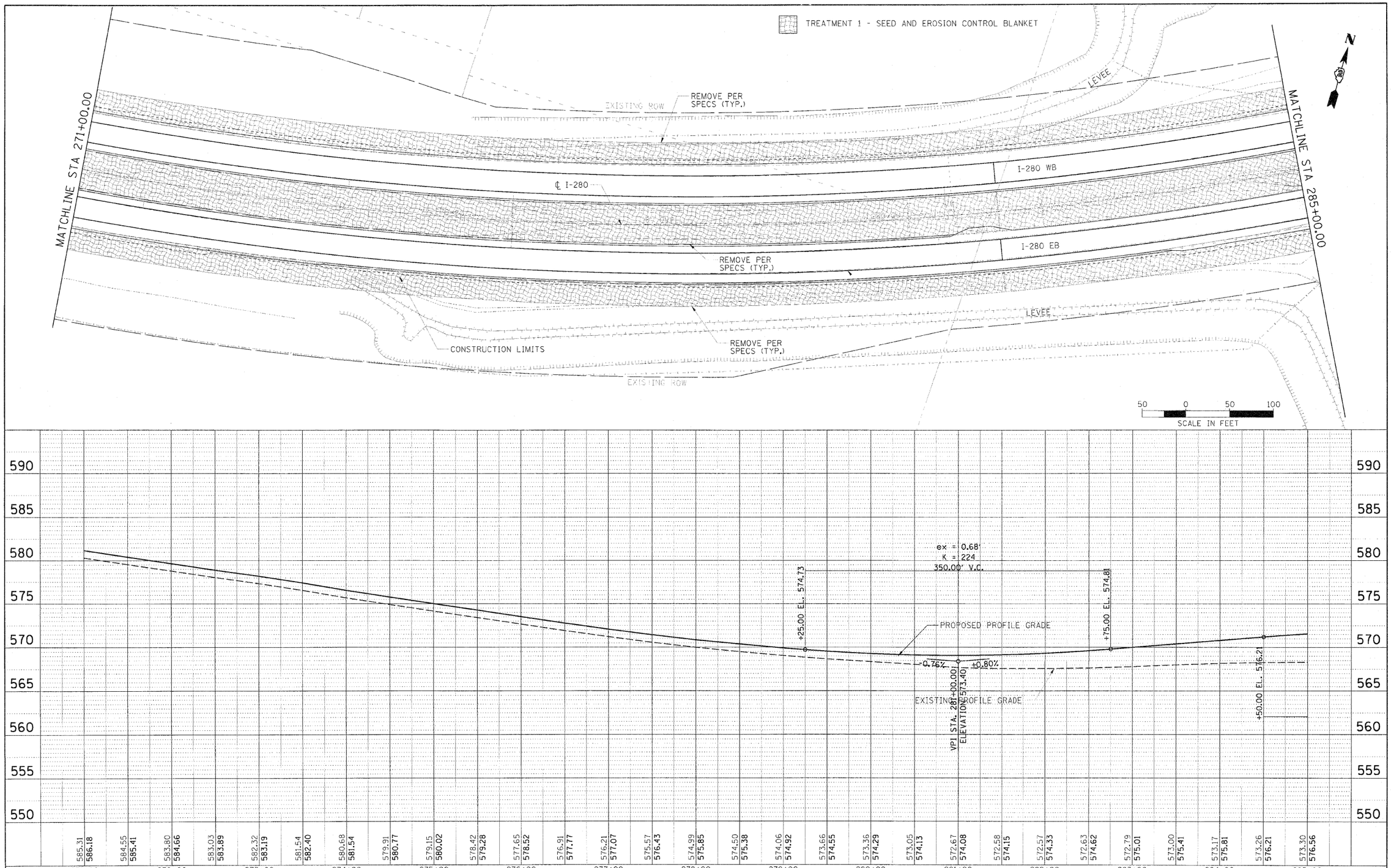

FILE NAME = D284810-sht-sec-plan	USER NAME = mads-22377	DESIGNED - CRC	REVISED -
		DRAWN - JDM	REVISED -
MODEL NAME = 1280 EBP2 08	PLOT SCALE = 50.0000 ' / in.	CHECKED - CRC	REVISED -
	PLOT DATE = 07/22/2010	DATE - 07/23/10	REVISED -

STATE OF ILLINOIS
DEPARTMENT OF TRANSPORTATION

I-280
RESTORATION PLAN
STAGE II PLAN

SCALE: 1" = 50' SHEET NO. OF SHEETS STA. 271+00.00 TO STA. 285+00.00

F.A. RTE.	SECTION	COUNTY	TOTAL SHEETS	SHEET NO.
280	81-1(B-1,HB,HB-1,HB-2,VB,VB-1)R	ROCK ISLAND	503	113

CONTRACT NO. 64815

7 ILLINOIS FED. AID PROJECT 7

PLAN — SURVEYED / PLOTTED / ALIGNMENT TAGGED / NOTE BOOK / NO. / CADD FILE NAME — DATE

PROFILE — SURVEYED / PLOTTED / GRADE CHECKED / NOTE BOOK / NO. / SIGNATURE INITIALS CARD — DATE

HANSON
Hanson Professional Services Inc.

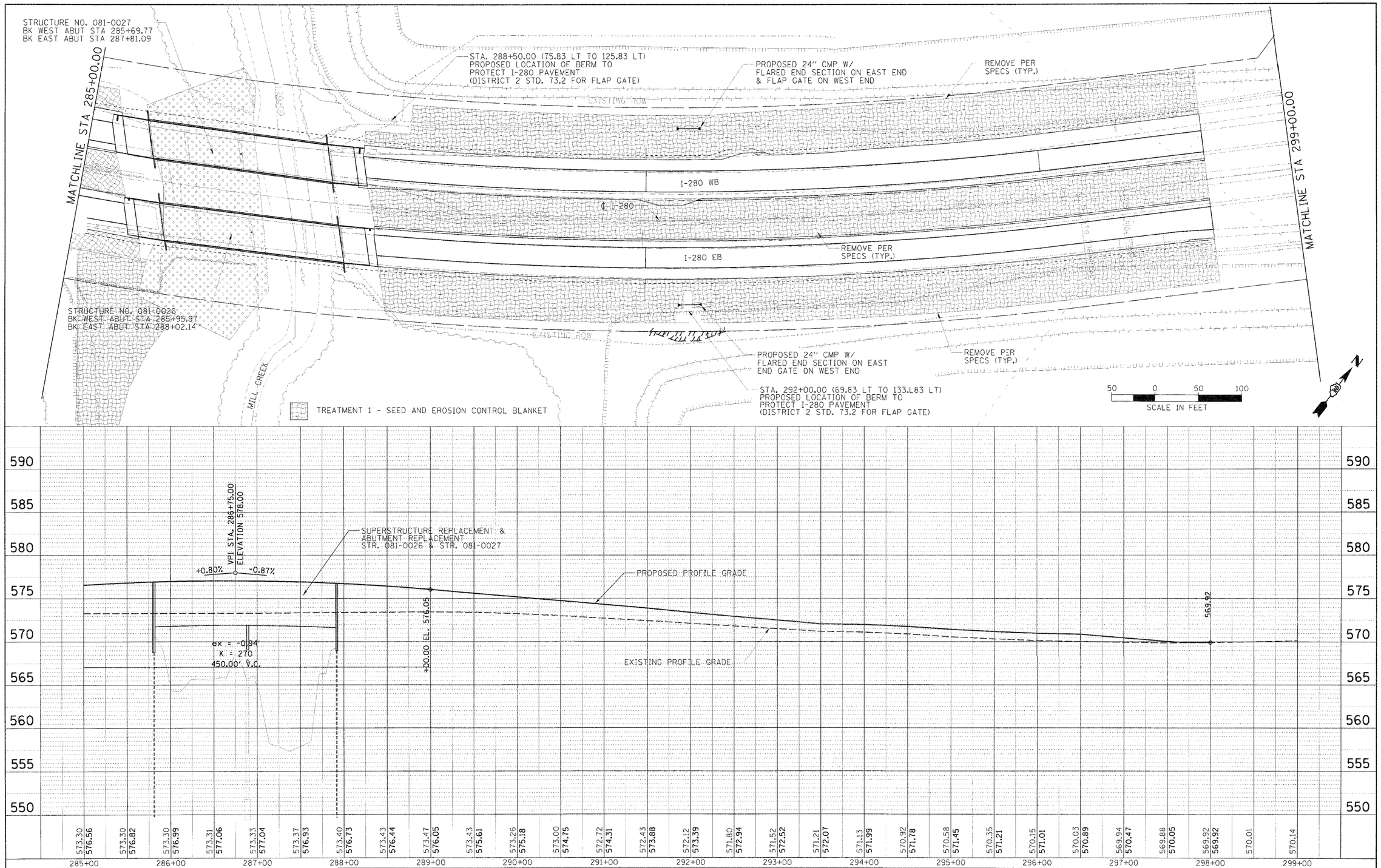

HANSON
Hanson Professional Services Inc.

PLAN	BY	DATE
SURVEY		
PLOTTED		
DRAWN BY		
RT. OF WAY CHECKED		
CADD FILE NAME		
NOTE BOOK		
NO.		

PROFILE	BY	DATE
SURVEY		
PLOTTED		
GRADES CALCULATED		
CADD FILE NAME		
NOTE BOOK		
NO.		

FILE NAME =	USER NAME = mede-80377	DESIGNED - CRC	REVISED -
D:\64815-stage2.dgn		DRAWN - JDM	REVISED -
MODEL NAME =	PLOT SCALE = 50.0000 ' / in.	CHECKED - CRC	REVISED -
1280 SCR2 07	PLOT DATE = 07/26/2010	DATE - 07/23/10	REVISED -

STATE OF ILLINOIS
DEPARTMENT OF TRANSPORTATION

I-280
RESTORATION PLAN
STAGE II PLAN

SCALE: 1" = 50' | SHEET NO. OF SHEETS | STA. 285+00.00 TO STA. 299+00.00

F.A. RTE.	SECTION	COUNTY	TOTAL SHEETS	SHEET NO.
280	81-1HB-1,HB,HB-1,HB-2,VB,VB-1R	ROCK ISLAND	503	114

CONTRACT NO. 64815

7 ILLINOIS FED. AID PROJECT 7

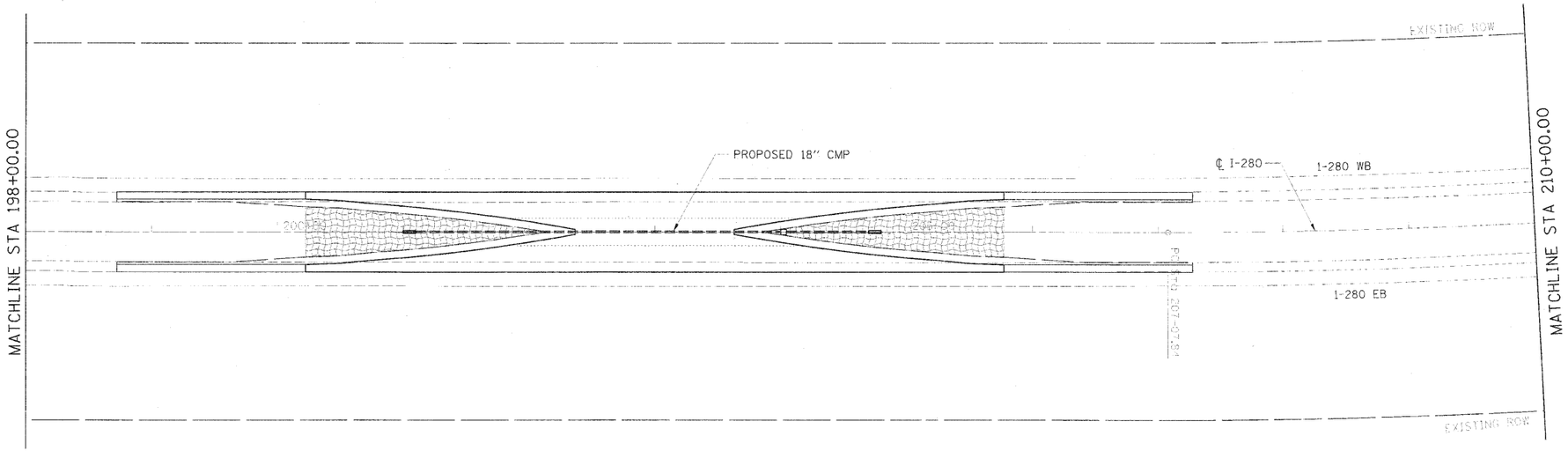

TREATMENT 1 - SEED AND EROSION CONTROL BLANKET

50 0 50 100
SCALE IN FEET

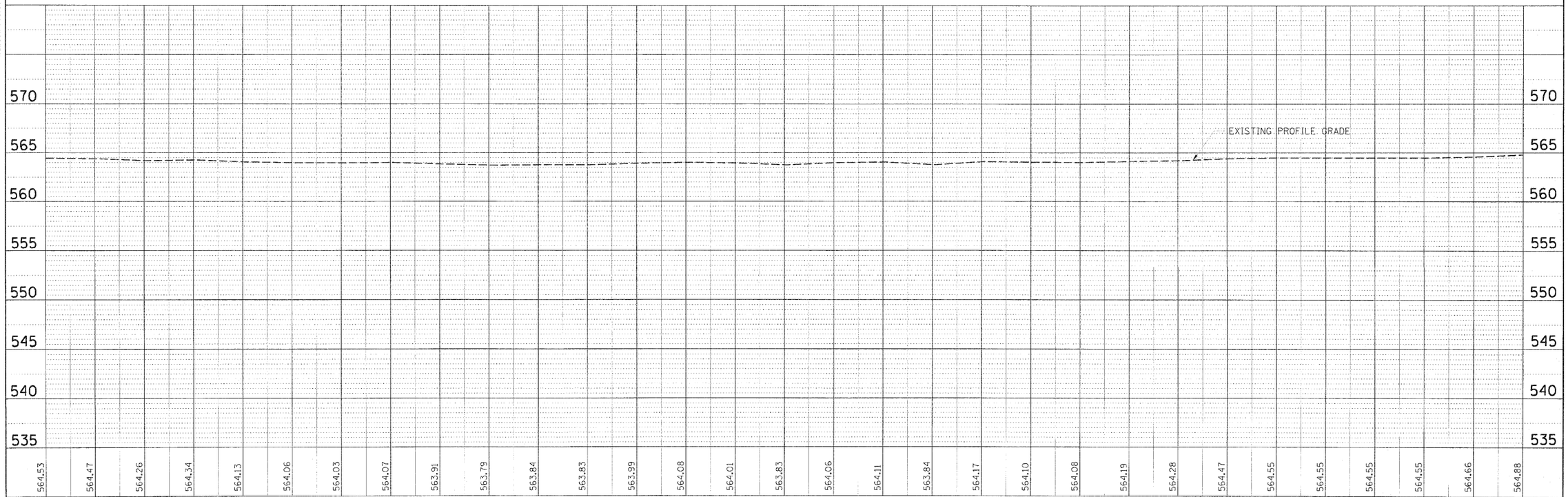

FILE NAME = I:\284015\sheets\plan\ MODEL NAME = I280 PP 01	USER NAME = msdar20377	DESIGNED - CRC	REVISED -
		DRAWN - JDM	REVISED -
	PLOT SCALE = 50.0000 ' / in.	CHECKED - CRC	REVISED -
	PLOT DATE = 27\22\2010	DATE - 07/23/10	REVISED -

STATE OF ILLINOIS
DEPARTMENT OF TRANSPORTATION

I-280
RESTORATION PLAN
STAGE I PLAN

SCALE: 1" = 50' | SHEET NO. OF SHEETS | STA. 200+00.00 TO STA. 215+00.00

F.A. RTE.	SECTION	COUNTY	TOTAL SHEETS	SHEET NO.
280	81-1IB-1,HB,HB-1,HB-2,VB,VB-1R	ROCK ISLAND	503	115

CONTRACT NO. 64815

7 ILLINOIS FED. AID PROJECT 7

PLAN | BY | DATE
PLOTTED
CHECKED
SHT. OF WAY CHECKED
F.A.RD. FILE NAME
NOTE BOOK
NO.

PROFILE | BY | DATE
PLOTTED
CHECKED
DRAWN/NOTED
STRUCTURE NOTATIONS CHKD
NOTE BOOK
NO.

HANSON
Hanson Professional Services Inc.

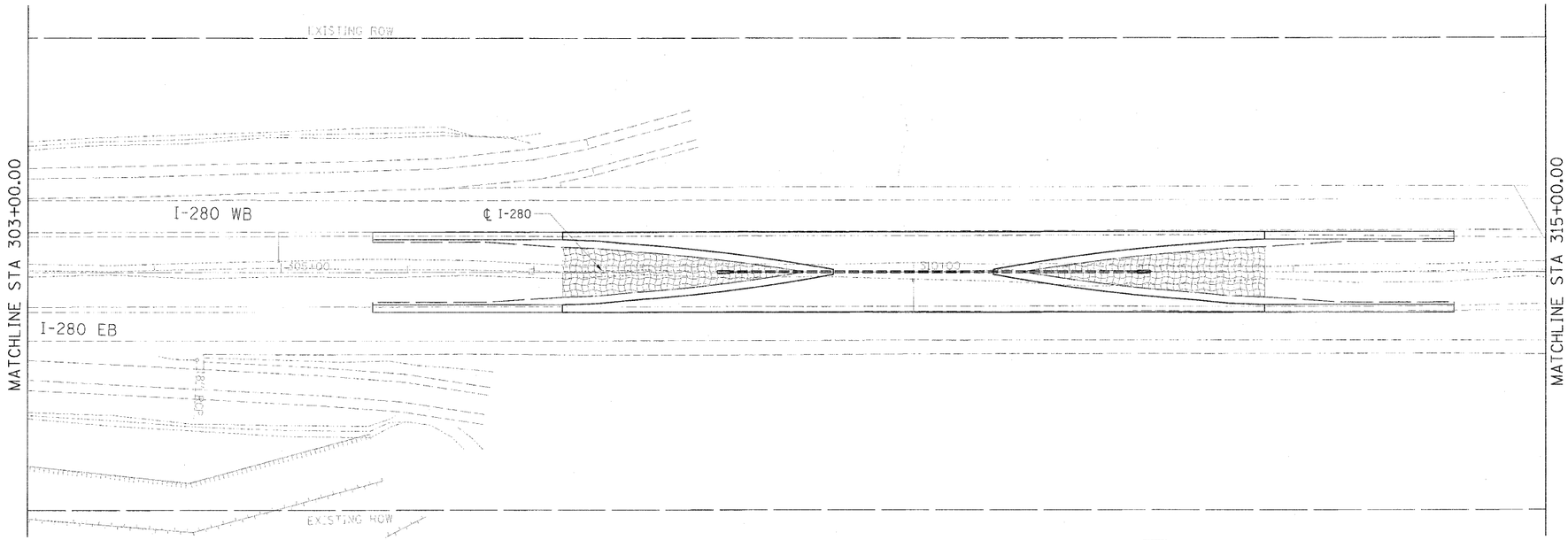

TREATMENT 1 - SEED AND EROSION CONTROL BLANKET

N

50 0 50 100
SCALE IN FEET

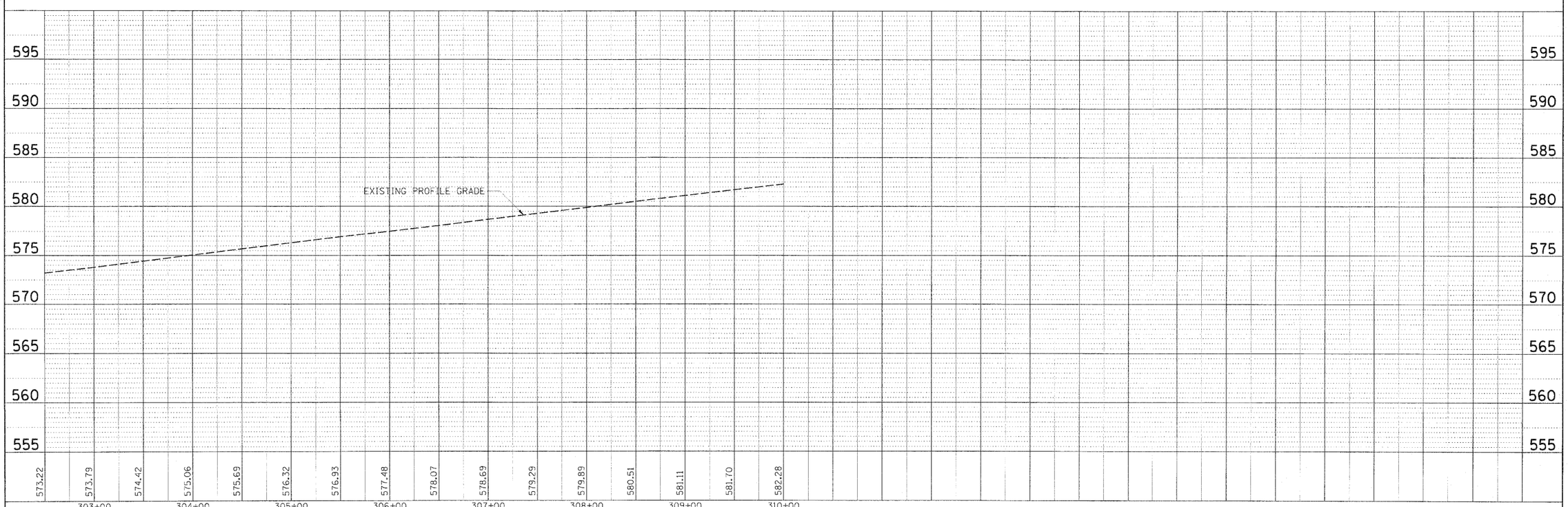

FILE NAME = 2284615-sheetset.dgn	USER NAME = reader00377	DESIGNED - CRC	REVISED -
		DRAWN - JDM	REVISED -
MODEL NAME =	PLOT SCALE = 50.0000 ' / in.	CHECKED - CRC	REVISED -
1269 OF 30	PLOT DATE = 07/22/2010	DATE - 07/23/10	REVISED -

STATE OF ILLINOIS
DEPARTMENT OF TRANSPORTATION

I-280
RESTORATION PLAN
STAGE I PLAN

SCALE: 1" = 50' | SHEET NO. OF SHEETS | STA. 299+00.00 TO STA. 313+00.00

F.A. RTE.	SECTION	COUNTY	TOTAL SHEETS	SHEET NO.
280	81-1(B-1,HB,VB-1,HB-2,VB,VB-1)R	ROCK ISLAND	503	116

CONTRACT NO. 64815

7 ILLINOIS FED. AID PROJECT 7

PI ARI | SURVEYED | PLOTTED | NOTE BOOK | CROSS SECTIONED | NO. | STRUCTURE NOTATIONS CHKD | BY | DATE

PROFILE | SURVEYED | PLOTTED | NOTE BOOK | CROSS SECTIONED | NO. | STRUCTURE NOTATIONS CHKD | BY | DATE

HANSON
Hanson Professional Services Inc.

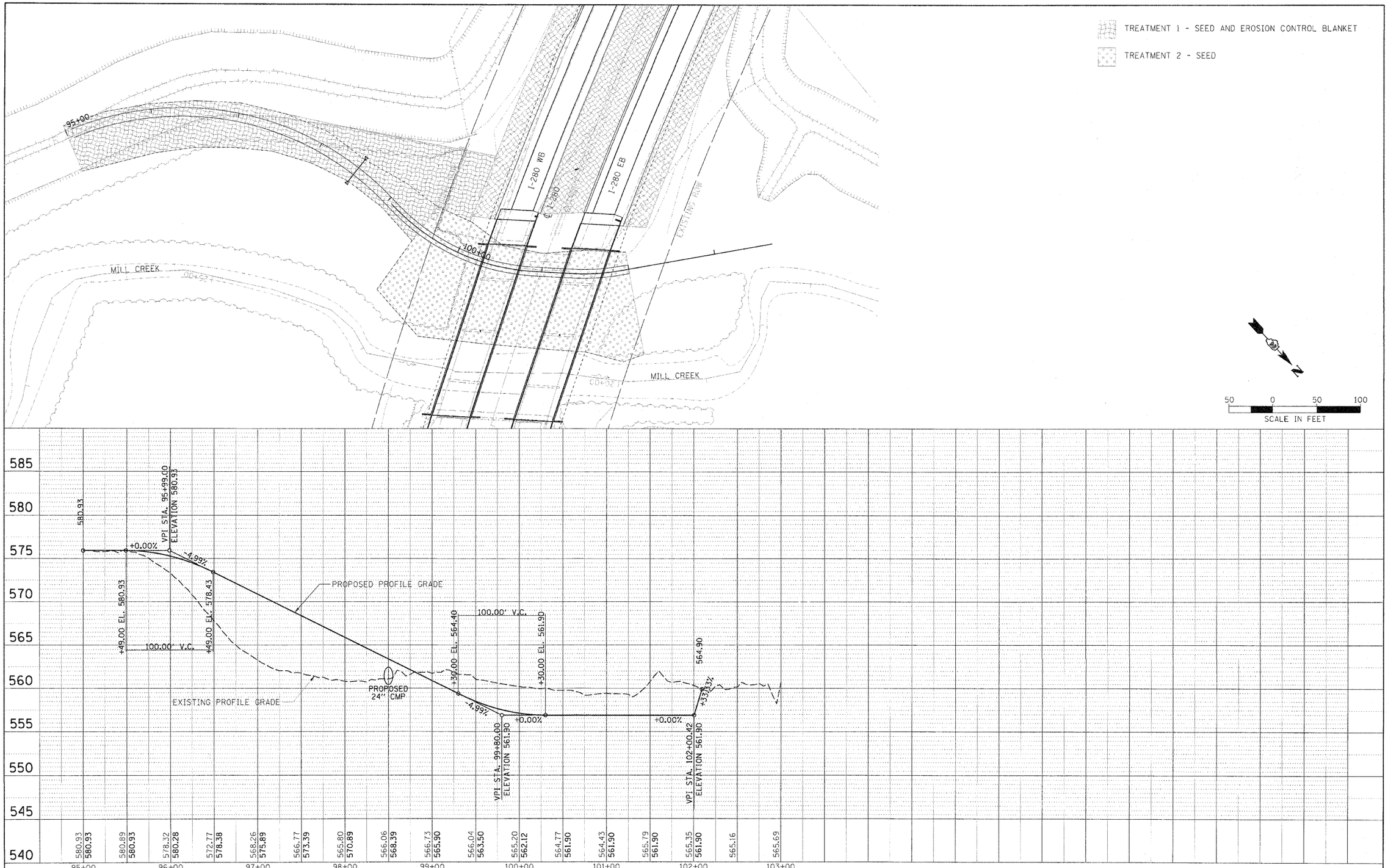

FILE NAME = D284810-sheetset\bikepath.dgn	USER NAME = mader00977	DESIGNED - CRC	REVISED -
MODEL NAME = Bike Path		DRAWN - JDM	REVISED -
	PLOT SCALE = 20.0000 / in.	CHECKED - CRC	REVISED -
	PLOT DATE = 27\22\2010	DATE - 07/23/10	REVISED -

STATE OF ILLINOIS
DEPARTMENT OF TRANSPORTATION

MILL CREEK BIKE PATH
RESTORATION PATH

SCALE: 1" = 50' | SHEET NO. OF SHEETS | STA. 95+00 TO STA. 102+12

F.A. RTE.	SECTION	COUNTY	TOTAL SHEETS	SHEET NO.
280	81-1HB-1,HB,HB-1,HB-2,VB,VB-1,R	ROCK ISLAND	503	117

CONTRACT NO. 64815

7 ILLINOIS FED. AID PROJECT 7

HANSON
Hanson Professional Services Inc.

PLAN | NOTE BASE | NO. | SURVEYED | PLOTTED | CHECKED | DESIGNED | REVISED | CADD FILE NAME | BY | DATE

PROFILE | NOTE SCALE | NO. | SURVEYED | PLOTTED | CHECKED | DESIGNED | REVISED | STRUCTURE DETAILS CHKD | BY | DATE

HANSON
Hanson Professional Services Inc.

INDEX OF SHEETS

LIST OF ILLINOIS DOT HIGHWAY STANDARDS

STD. NUMBER	DESCRIPTION
720001	SIGN PANEL MOUNTING DETAILS
720006	SIGN PANEL ERECTION DETAILS
720011	METAL POST FOR SIGNS, MARKERS & DELINEATORS
720021-02	SIGN PANELS EXTRUDED ALUMINUM TYPE
729001	APPLICATIONS OF TYPES A & B METAL POSTS (FOR SIGNS & MARKERS)

BILL OF MATERIALS

TOTAL BILL OF MATERIALS (FOR INFORMATION ONLY)

DESCRIPTION	UNIT	TOTAL QUANTITY	REGULATORY AND WARNING SIGNS	GROUND MOUNTED SIGNS	BRIDGE MOUNTED SIGNS
SIGN PANEL - TYPE 2	SQ FT	32.00	32.00	0	0
SIGN PANEL - TYPE 3	SQ FT	547.50	0.00	196.00	351.50
STRUCTURAL STEEL SIGN SUPPORT - BREAKAWAY	POUND	2,137.50	0.00	2,137.50	0.00
Wood Sign Support	Foot	40.0	40.0	0.00	0.00
CONCRETE FOUNDATIONS	CU YD	4.18		4.18	0.00
REINFORCEMENT BARS	POUND	244.0		244.00	0.00

BILL OF MATERIALS – REMOVAL

SIGN REMOVAL NUMBER	ALIGNMENT NAME	STATION	LOCATION (LEFT, RIGHT, MEDIAN, STRUCTURE)	PANEL WIDTH FEET	PANEL HEIGHT FEET	SIGN AREA SQ FT	POST MATERIAL	REMOVE SIGN PANEL TYPE 2 SQ FT	REMOVE SIGN PANEL TYPE 3 SQ FT	REMARKS
001	I-280	104+58.17	STRUCTURE	19	9.5	180.50			180.50	IL-92 EAST - ROCK ISLAND
002	I-280	105+40.28	STRUCTURE	18	9.5	171.00			171.00	IL-92 WEST - ANDALUSIA
003	I-280	284+02.59	RT	14	14	196.00	Steel		196.00	EXIT 15 - AIRPORT RD -MILAN - US 67
004	I-280	289+31.89	LT	2.5	3	7.50	Steel	7.50		SPEED LIMIT 65 - MIN 45

FILE NAME = D267812-sht-sig-01.dgn	USER NAME = modler00177	DESIGNED - JDW	REVISED - 9/8/10 EEC	STATE OF ILLINOIS DEPARTMENT OF TRANSPORTATION	SIGNING PLANS			F.A.I. RTE.	SECTION	COUNTY	TOTAL SHEETS / SHEET NO.
		DRAWN - DAP	REVISED -					280	81-1HB-1,HB,HB-1,HB-2,VB,VB-1R	ROCK ISLAND	503 / 118
MODEL NAME =	PLOT SCALE = 50.0000 ' / in.	CHECKED - DES	REVISED -							CONTRACT NO. 64815	
Signing.21	PLOT DATE = 07/26/2010	DATE - 07/23/10	REVISED -		SCALE:	SHEET NO. OF SHEETS	STA. TO STA.	FED. ROAD DIST. NO. 7	ILLINOIS	FED. AID PROJECT 7	

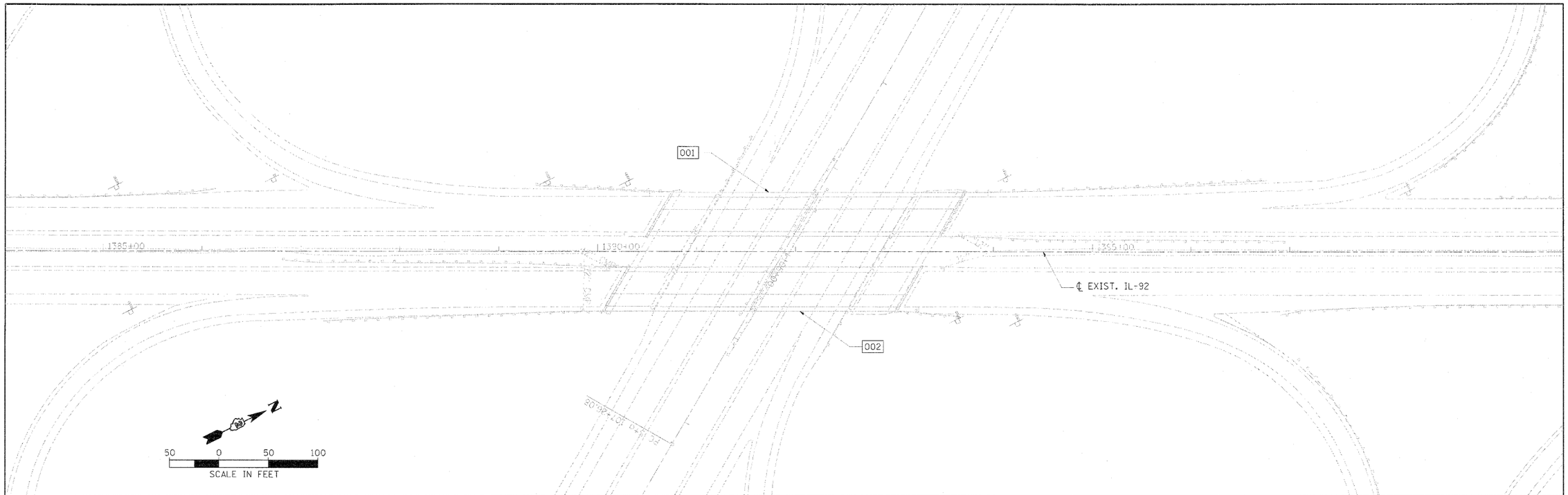

NOTES

1. THIS PLAN IS FOR SIGN REMOVALS ONLY.

2. REMOVAL OF THE EXISTING GROUND MOUNTED SIGN STRUCTURES AND FOUNDATIONS SHALL BE PAID FOR AT THE CONTRACT UNIT PRICE EACH FOR REMOVE GROUND-MOUNTED SIGN SUPPORT AND REMOVE CONCRETE FOUNDATION-GROUND MOUNT, RESPECTIVELY.

   REMOVAL OF THE EXISTING GROUND MOUNTED SIGN PANELS SHALL BE PAID FOR AT THE CONTRACT UNIT PRICE PER SQ. FT. FOR REMOVE SIGN PANEL OF THE TYPE SPECIFIED.

   REMOVAL OF THE EXISTING SIGN PANELS ON WOOD SUPPORTS SHALL BE PAID FOR AT THE CONTRACT UNIT PRICE EACH FOR REMOVE SIGN PANEL ASSEMBLY OF THE TYPE SPECIFIED, REGARDLESS OF THE SIGN PANEL SIZE.

3. THE CONTRACTOR SHALL REMOVE EXISTING BUSINESS LOGO AND HERITAGE CORRIDOR PANELS AND RETURN TO THE ENGINEER. THE COST FOR THIS WORK SHALL BE INCLUDED IN THE REMOVAL OF THE MAIN SIGN.

4. BUSINESS LOGO SIGNS NEED TO BE ERECTED ON A TEMPORARY SIGN PANEL DURING CONSTRUCTION.

HANSON
Hanson Professional Services Inc.

LAYOUT	DAP	10/17/13
REVISED	DAP	07/26/10
REVISED	DES	07/23/10

FILE NAME = 028C815-sht-sign02.dgn	USER NAME = nadar00377	DESIGNED - JDW	REVISED -	STATE OF ILLINOIS DEPARTMENT OF TRANSPORTATION	SIGNING PLANS
		DRAWN - DAP	REVISED -		
MODEL NAME = Signing_02	PLOT SCALE = 50.0000 ' / in.	CHECKED - DES	REVISED -		SCALE: SHEET NO. OF SHEETS STA. TO STA.
	PLOT DATE = 27\36\2010	DATE - 07/23/10	REVISED -		

F.A.I. RTE.	SECTION	COUNTY	TOTAL SHEETS	SHEET NO.
280	81-1(B-1,HB,HB-1,HB-2,VB,VB-1)R	ROCK ISLAND	503	119
		CONTRACT NO. 64815		
FED. ROAD DIST. NO. 7	ILLINOIS	FED. AID PROJECT 7		

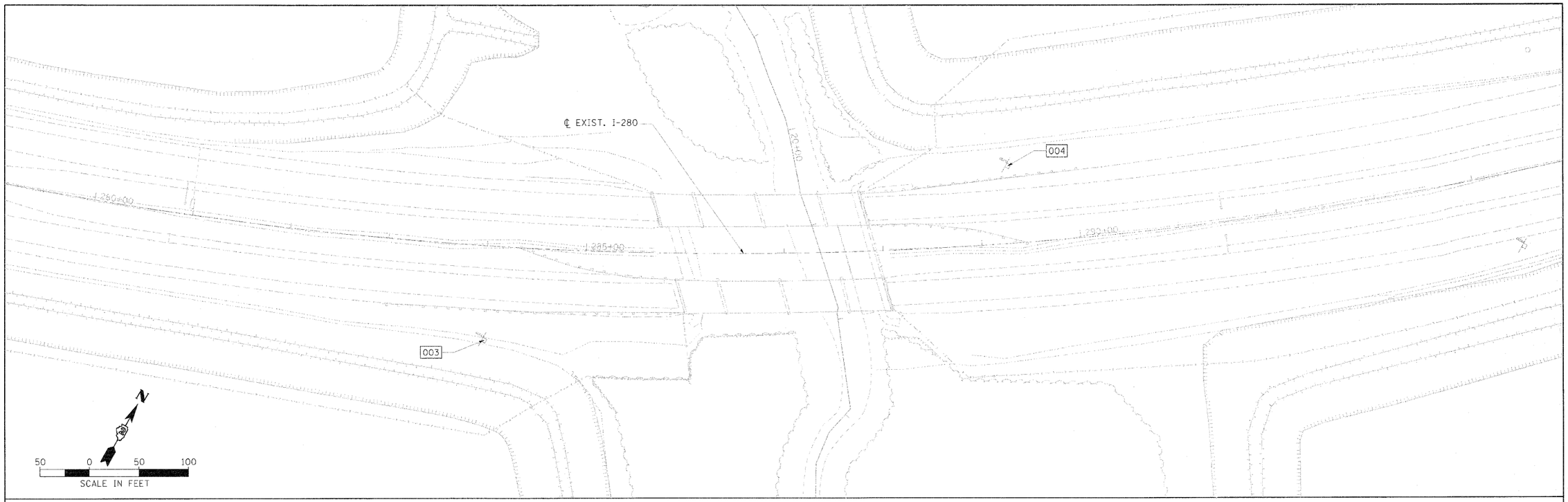

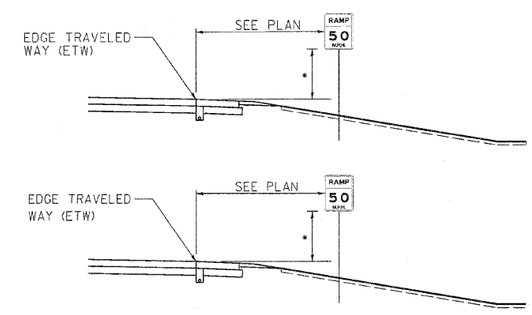

* SEE PLAN (ETW + 4', ETW + 5', ETW + 7')

NOTES

1. THIS PLAN IS FOR SIGN REMOVALS ONLY.

2. REMOVAL OF THE EXISTING GROUND MOUNTED SIGN STRUCTURES AND FOUNDATIONS SHALL BE PAID FOR AT THE CONTRACT UNIT PRICE EACH FOR REMOVE GROUND-MOUNTED SIGN SUPPORT AND REMOVE CONCRETE FOUNDATION-GROUND MOUNT, RESPECTIVELY.

   REMOVAL OF THE EXISTING GROUND MOUNTED SIGN PANELS SHALL BE PAID FOR AT THE CONTRACT UNIT PRICE PER SQ. FT. FOR REMOVE SIGN PANEL OF THE TYPE SPECIFIED.

   REMOVAL OF THE EXISTING SIGN PANELS ON WOOD SUPPORTS SHALL BE PAID FOR AT THE CONTRACT UNIT PRICE EACH FOR REMOVE SIGN PANEL ASSEMBLY OF THE TYPE SPECIFIED, REGARDLESS OF THE SIGN PANEL SIZE.

3. THE CONTRACTOR SHALL REMOVE EXISTING BUSINESS LOGO AND HERITAGE CORRIDOR PANELS AND RETURN TO THE ENGINEER. THE COST FOR THIS WORK SHALL BE INCLUDED IN THE REMOVAL OF THE MAIN SIGN.

4. BUSINESS LOGO SIGNS NEED TO BE ERECTED ON A TEMPORARY SIGN PANEL DURING CONSTRUCTION.

TYPICAL GROUND MOUNTED SIGN INSTALLATION

1. ALL SIGNS SHALL BE FABRICATED AND ERECTED IN ACCORDANCE WITH THE ILLINOIS MANUAL ON UNIFORM TRAFFIC CONTROL DEVICES AND THE CURRENT ILLINOIS DEPARTMENT OF TRANSPORTATION STANDARD SPECIFICATIONS FOR ROAD AND BRIDGE CONSTRUCTION.

2. THE CONTRACTOR SHALL VERIFY ALL POST LENGTHS REQUIRED PRIOR TO ORDERING.

3. PROVIDE 12"x12" SQUARE BLOCKOUTS FOR SIGNS LOCATED IN ISLANDS OR MEDIANS.

HANSON
Hanson Professional Services Inc.

LAYOUT	DAP	10/27/10
DRAWN	DAP	07/16/10
REVIEWED	DES	07/23/10

FILE NAME = 0281615-sheet-sign-03.dgn	USER NAME = master20277	DESIGNED - JDW	REVISED -
		DRAWN - DAP	REVISED -
MODEL NAME = Signing_03	PLOT SCALE = 50.0000 ' / in.	CHECKED - DES	REVISED -
	PLOT DATE = 07/26/2010	DATE - 07/23/10	REVISED -

STATE OF ILLINOIS
DEPARTMENT OF TRANSPORTATION

SIGNING PLANS

SCALE: | SHEET NO. OF SHEETS | STA. TO STA.

F.A.I. RTE.	SECTION	COUNTY	TOTAL SHEETS	SHEET NO.
280	81-1(B-1,HB,HB-1,VB-2,VB,VB-1)R	ROCK ISLAND	503	120
		CONTRACT NO. 64815		

FED. ROAD DIST. NO. 7 ILLINOIS | FED. AID PROJECT ?

HANSON
Hanson Professional Services Inc.

12.0" Radius, 2.0" Border, White on Green;
"EXIT" Black ClearviewHwy-3-W; "15" Black ClearviewHwy-3-W;
"Airport Rd" ClearviewHwy-5-W; "Milan" ClearviewHwy-5-W;
"To US 67" ClearviewHwy-5-W; "½" ClearviewHwy-3-W;
"MILE" ClearviewHwy-3-W;
Table of widths and spaces.

	E		X		I		T		1		5	
93.2	5.5	1.5	7.5	2.2	1.7	2.0	5.3	15.0	5.9	3.7	9.1	14.4

	—	
2.0	164.0	2.0

	A		i		r		p		o		r		t
14.4	15.0	4.2	3.8	5.7	7.3	4.7	11.6	4.8	12.4	5.4	7.3	3.1	7.8

	R		d	
17.7	12.0	4.8	11.6	14.4

	—	
2.0	164.0	2.0

	M		i		l		a		n	
50.5	14.7	5.9	3.8	5.7	5.0	3.8	12.0	5.0	11.1	50.5

	T		o		U		S		6		7	
24.2	11.5	4.1	12.4	18.2	12.4	5.3	11.5	17.3	11.6	4.0	11.3	24.2

	½		M		I		L		E	
53.2	21.0	12.0	8.2	3.0	1.7	3.0	5.0	2.2	5.5	53.2

SIGN 003 DETAIL

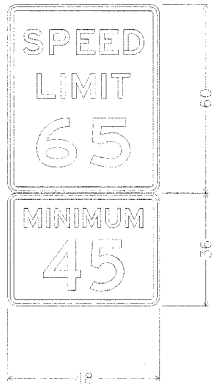

SIGN 004 DETAIL

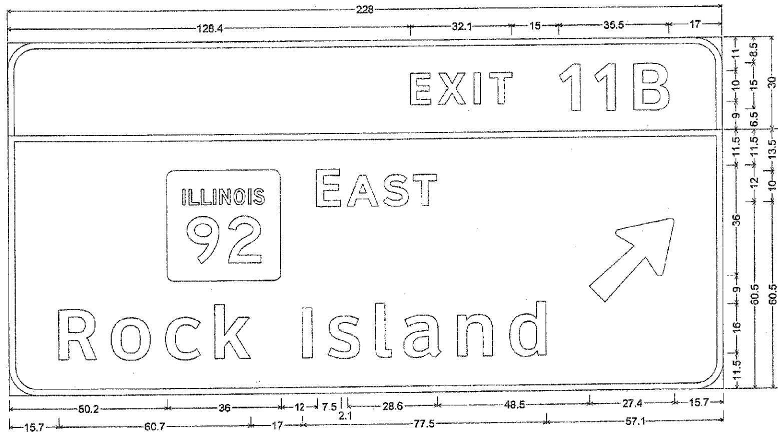

9.0" Radius, 2.0" Border, White on Green;
"EXIT" ClearviewHwy-5-W; "11B" ClearviewHwy-5-W;
9.0" Radius, 2.0" Border, White on Green;
"E" ClearviewHwy-5-W " AST" E Mod 2K; "Rock Island" ClearviewHwy-5-W; 18x30;
Table of widths and spaces.

	E		X		I		T		1		1		B	
128.4	6.3	2.2	8.7	2.7	2.0	3.0	7.2	15.0	6.9	4.4	6.8	6.0	11.4	17.0

	92		E		A		S		T		↗	
50.2	36.0	12.0	7.5	2.1	10.1	1.5	8.1	1.5	7.4	48.5	27.4	15.7

	R		o		c		k		I		s		l		a		n		d	
15.7	12.0	4.8	12.4	4.8	10.8	4.5	11.4	17.0	3.1	5.1	10.2	5.1	5.1	3.8	11.9	5.1	11.1	5.4	11.6	57.1

SIGN 001 DETAIL

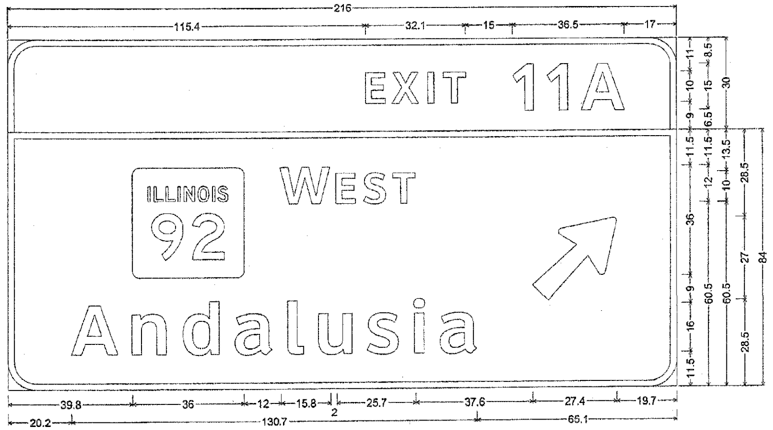

9.0" Radius, 2.0" Border, White on Green;
"EXIT" ClearviewHwy-5-W; "11A" ClearviewHwy-5-W;
9.0" Radius, 2.0" Border, White on Green;
"W EST" ClearviewHwy-5-W; "Andalusia" ClearviewHwy-5-W; 18x30;
Table of widths and spaces.

	E		X		I		T		1		1		A	
115.4	6.3	2.2	8.7	2.7	1.9	3.0	7.3	15.0	6.8	4.4	6.9	4.3	14.1	17.0

	92		W		E		S		T		↗	
39.8	36.0	12.0	15.8	2.0	6.4	2.6	7.2	2.3	7.2	37.6	27.4	19.7

	A		n		d		a		l		u		s		i		a	
20.2	15.0	4.5	11.1	5.4	11.6	5.1	11.9	5.1	5.0	4.8	11.0	4.8	10.2	4.8	3.8	4.7	11.9	65.1

SIGN 002 DETAIL

FILE NAME =
D264815-sht-sign04.dgn
MODEL NAME =
Signing_04

USER NAME = madsr07377
PLOT SCALE = 50.0200 ' / in.
PLOT DATE = 07\26\2010

DESIGNED - JDW
DRAWN - DAP
CHECKED - DES
DATE - 07/23/10

REVISED -
REVISED -
REVISED -
REVISED -

STATE OF ILLINOIS
DEPARTMENT OF TRANSPORTATION

SIGNING PLANS

SCALE: SHEET NO. OF SHEETS STA. TO STA.

F.A.I. RTE.	SECTION	COUNTY	TOTAL SHEETS	SHEET NO.
280	81-1(B-1,HB,HB-1,HB-2,VB,VB-1)R	ROCK ISLAND	503	121

CONTRACT NO. 64815

FED. ROAD DIST. NO. 7 ILLINOIS FED. AID PROJECT 7

BILL OF MATERIALS
Bridge Patching and Overlay

CODE NO.	DESCRIPTION	UNIT	TOTAL QUANTITY
20400800	FURNISHED EXCAVATION	CU YD	100
40600200	BITUMINOUS MATERIALS (PRIME COAT)	TON	2.27
40600982	HOT-MIX ASPHALT SURFACE REMOVAL - BUTT JOINT	SQ YD	2346.6
40603345	HOT-MIX ASPHALT SURFACE COURSE, MIX "D", N90	TON	813.7
50157300	PROTECTIVE SHIELD	SQ YD	835
50300225	CONCRETE STRUCTURES	CU YD	4.9
50300300	PROTECTIVE COAT	SQ YD	21
50800205	REINFORCEMENT BARS, EPOXY COATED	POUND	540
60260100	INLETS TO BE ADJUSTED	EACH	6
66101150	HOT-MIX ASPHALT SHOULDER CURB	FOOT	75
70300100	SHORT-TERM PAVEMENT MARKING	FOOT	2583.8
70300220	TEMPORARY PAVEMENT MARKING - LINE 4"	FOOT	77644.4
70300240	TEMPORARY PAVEMENT MARKING - LINE 6"	FOOT	5625
70301000	WORK ZONE PAVEMENT MARKING REMOVAL	SQ FT	6388.8
70400100	TEMPORARY CONCRETE BARRIER	FOOT	2312.5
70400200	RELOCATE TEMPORARY CONCRETE BARRIER	FOOT	4625
70500100	TEMPORARY STEEL PLATE BEAM GUARD RAIL, TYPE A	FOOT	1437.5
70500665	TEMPORARY TRAFFIC BARRIER TERMINAL, TYPE 6	EACH	5
78201000	TERMINAL MARKER - DIRECT APPLIED	EACH	5
78300100	PAVEMENT MARKING REMOVAL	SQ FT	2163.8
X7050167	TEMPORARY TRAFFIC BARRIER TERMINAL, TYPE 1, SPECIAL (TANGENT)	EACH	5
Z0016001	DECK SLAB REPAIR (FULL DEPTH, TYPE I)	SQ YD	133
Z0016002	DECK SLAB REPAIR (FULL DEPTH, TYPE II)	SQ YD	69
Z0016200	DECK SLAB REPAIR (PARTIAL)	SQ YD	677
Z0030250	IMPACT ATTENUATORS, TEMPORARY (NON-REDIRECTIVE), TEST LEVEL 3	EACH	5
Z0030350	IMPACT ATTENUATORS, RELOCATE (NON-REDIRECTIVE), TEST LEVEL 3	EACH	5

SCHEDULES FOR NON-STRUCTURE ITEMS LOCATED IN PRE-STAGE PLAN SHEETS 54 - 63.

MILL CREEK PIER REMOVAL USES 347 SQ.YD. "PROTECTIVE SHIELD"

General Notes
Bridge Patching and Overlay

Reflector Markers Type C shall be installed on the top and face of bridge parapet walls. The markers shall be according to Standard 635011 and the color and spacing according to Standard 635006, except their shall be 4 markers installed per parapet wall at equal spacing. Cost shall be included in the cost of "TEMPORARY CONCRETE BARRIER".

The Contractor shall be responsible for protecting utility property during construction operations as outlined in Article 107.31 of the Standard Specifications. A minimum of 48 hours advance notice is required for non-emergency work. The JULIE number is 800-892-0123.

The objective of this preliminary work is to patch (Partial Depth) the concrete wearing surfaces of the bridge decks then add an HMA overlay. Deck Slab Repair (Full Depth) is only included as a contingency item to be used should a full depth failure develop during this contract.

See the 'MAINTENANCE OF TRAFFIC, PRE-STAGE PLAN' sheets for applicable traffic control and quantities.

BRIDGE PATCHING, BRIDGE OVERLAY, AND MEDIAN CROSS-OVER WORK TO BE DONE CONCURRENTLY.

CONTRACTOR REQUESTED CHANGES TO THE "PRE-STAGING" TRAFFIC CONTROL, IF APPROVED BY THE DEPARTMENT, SHALL BE INCLUDED IN THE COST OF TRAFFIC CONTROL ITEMS SHOWN ON "MAINTENANCE OF TRAFFIC, PRE-STAGE PLAN" SHEETS.

• 81-1(B-1, HB, HB-1, HB-2, VB, VB-1)R

Temporary Concrete Barrier

STANDARD 701402

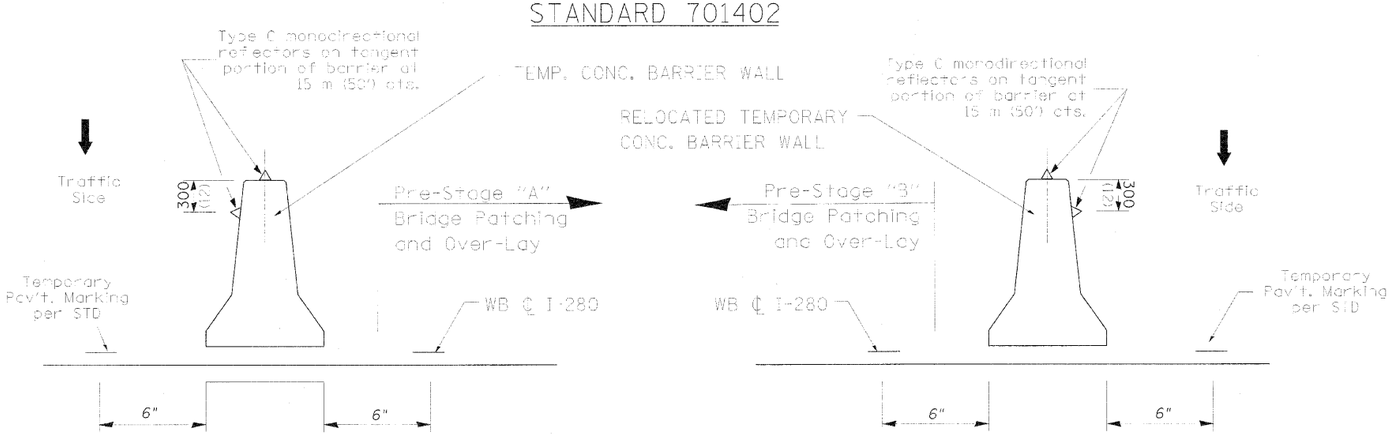

STANDARD 701416

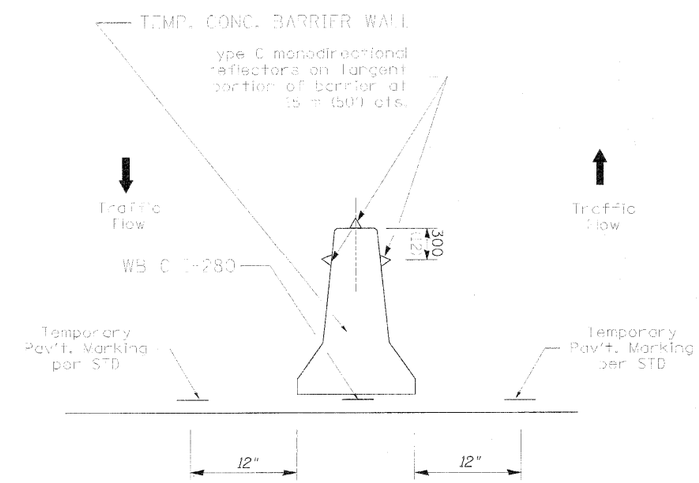

WESTBOUND LANES ONLY

Structure Number	PRE-STAGE WORK	78300100 pav't mark removal (@ Bridges)	70300220 temp. pav't marking Line 4"	Partial Depth Patching	70400200 STD 701402 reloc. Temp. conc. Barrier (WB)	78300100 pav't mark removal (@ Bridges)	70300220 temp. pav't marking Line 4"	70301000 Work Zone Pv't Mark Removal (SF)	40600982 HMA surface removal butt joint (Sq.Yd.)	40603345 HOT-MIX ASPHALT SURFACE COURSE, MIX "D", N90 HMA Taper (tons)	1.75" HMA Surface (tons)	70300220 temp. pav't marking Line 4"
	198 + 00 TO 231 + 00	---	---	See Patching sheets	3300	---	---	2200.00	---	---	---	---
	231 + 00 TO 231 + 80	26.67	80.00		80	26.67	80.00	53.33	238.22	27.09	---	80.00
081-0019	231 + 80 TO 234 + 85	101.67	305.00		305	101.67	305.00	203.33	---	---	118.09	305.00
	234 + 85 TO 235 + 65	26.67	80.00		80	26.67	80.00	53.33	236.33	27.09	---	80.00
	235 + 65 TO 239 + 70	---	---		405	---	---	270.00	---	---	---	---
	239 + 70 TO 240 + 50	26.67	80.00		80	26.67	80.00	53.33	232.67	26.46	---	80.00
081-0021	240 + 50 TO 242 + 85	78.33	235.00		235	78.33	235.00	156.67	---	---	88.592	235.00
	242 + 85 TO 243 + 65	26.67	80.00		80	26.67	80.00	53.33	234.11	26.586	---	80.00
	243 + 65 TO 252 + 95	---	---		930	---	---	620.00	---	---	---	---
	252 + 95 TO 253 + 75	26.67	80.00		80	26.67	80.00	53.33	231.56	26.46	---	80.00
081-0023	253 + 75 TO 256 + 20	81.67	245.00		245	81.67	245.00	163.33	---	---	93.002	245.00
	256 + 20 TO 257 + 00	26.67	80.00		80	26.67	80.00	53.33	234.22	26.586	---	80.00
	257 + 00 TO 262 + 00	---	---		500	---	---	333.33	---	---	---	---
	262 + 00 TO 262 + 80	26.67	80.00		80	26.67	80.00	53.33	233.67	26.523	---	80.00
081-0024	262 + 80 TO 266 + 40	120.00	360.00		360	120.00	360.00	240.00	---	---	135.534	360.00
	266 + 40 TO 267 + 20	26.67	80.00		80	26.67	80.00	53.33	236.44	27.216	---	80.00
	267 + 20 TO 284 + 45	---	---		1725	---	---	1150.00	---	---	---	---
	284 + 45 TO 285 + 25	26.67	80.00		80	26.67	80.00	53.33	238.33	26.901	---	80.00
081-0027	285 + 25 TO 288 + 25	100.00	300.00		300	100.00	300.00	200.00	---	---	110.936	300.00
	288 + 25 TO 289 + 05	26.67	80.00		80	26.67	80.00	53.33	227.00	26.46	---	80.00
	289 + 05 TO 314 + 75	---	---		2570	---	---	1713.33	---	---	---	---
	TOTAL	748.33	2,245.00		11,675.00	748.33	2,245.00	7,783.33	2,342.56	267.37	546.15	2,245.00

NOTE: TONAGE BASED UPON 112 LBS. PER (SQUARE YARD - INCH OF DEPTH)

TYPICAL TAPER

(INTERSTATE)

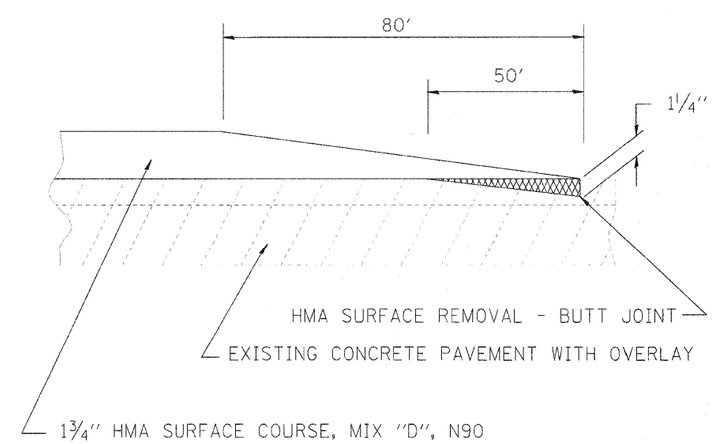

HANSON
Hanson Professional Services Inc.

LAYOUT	MWH	07/26/10
DRAWN	MWH	01/29/10
REVIEWED	DPA	07/23/10

FILE NAME = D264815 sht-bridpatch.dgn	USER NAME = Russ033-1	DESIGNED - DPA	REVISED -	STATE OF ILLINOIS DEPARTMENT OF TRANSPORTATION	DISTRICT 2 BRIDGE PATCHING TRAFFIC CONTROL & STRIPING
		DRAWN - MWH	REVISED -		
MODEL NAME = MCT2	PLOT SCALE = 50.0000 ' / in.	CHECKED - DPA	REVISED -		
	PLOT DATE = 07/22/2010	DATE - 07/23/10	REVISED -		SCALE: NTS SHEET NO. OF SHEETS STA. TO STA.

F.A.I. RTE.	SECTION	COUNTY	TOTAL SHEETS	SHEET NO.
280	81-1IB-1,HB,HB-1,HB-2,VB,VB-1R	ROCK ISLAND	503	123
		CONTRACT NO. 64815		

FED. ROAD DIST. NO. 7 ILLINOIS FED. AID PROJECT 7

HANSON
Hanson Professional Services Inc.

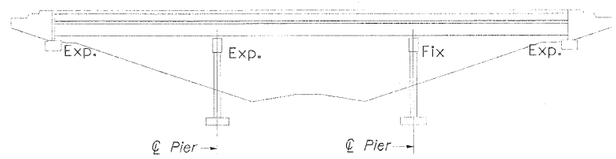

Elevation

Curve Date

Δ = 29° -19′ -45″
D = 1°
T = 1499.36′
L = 2932.91′
E = 192.93′
R = 5729.65′
S.E. = 0.010′

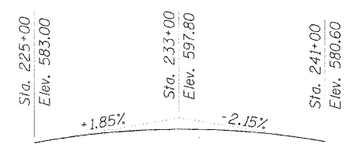

Profile Grade
Along ℄ Survey F.A.I. Route 280

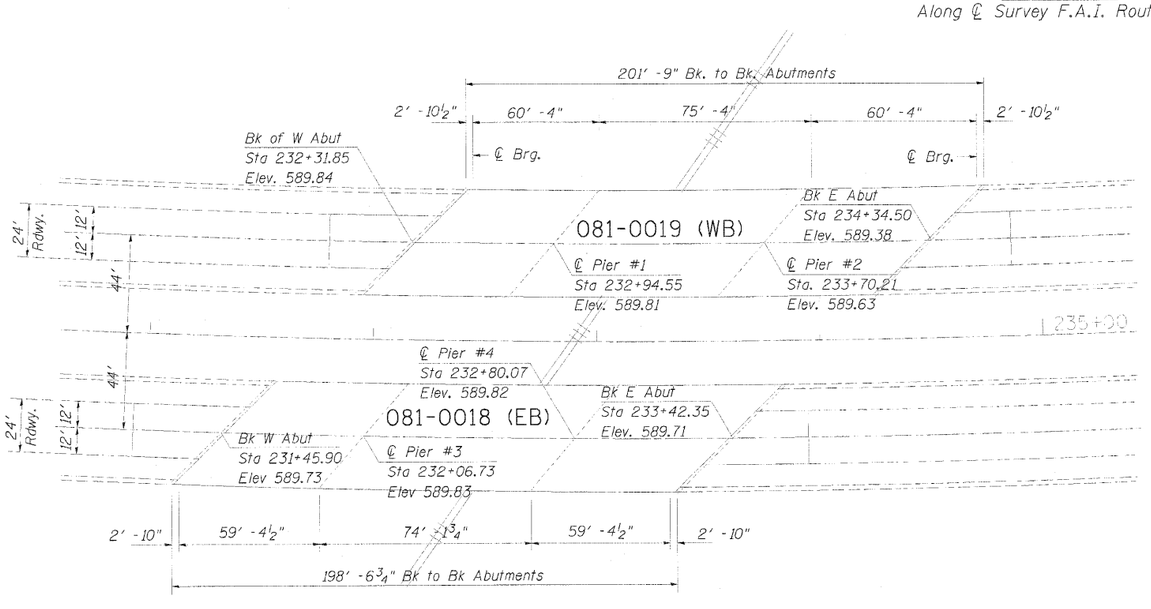

Plan

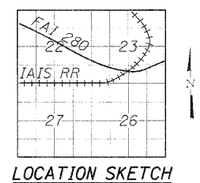

LOCATION SKETCH

GENERAL NOTES

Plan dimensions and details relative to existing plans are subject to nominal construction variations. The Contactor shall field verify existing dimensions and details affecting new construction and make necessary approved adjustments prior to construction or ordering of materials. Such variations shall not be cause for additional compensation for a change in scope of the work, however, the Contractor will be paid for the quantity actually furnished at the unit price bid for the work

Existing reinforcement if exposed shall be cleaned and incorporated into the new construction. Cost included with Deck Slab Repair.

GENERAL PLAN & ELEVATION
I-280 OVER IOWA INTERSTATE RAILROAD
FAI ROUTE 280
STA. 232+86.50
ROCK ISLAND COUNTY
STRUCTURE NUMBER 081-0019 (W.B.)

FILE NAME = D2S4815-hsnt-bridge-plan.dgn	USER NAME = Hanson, Phil	DESIGNED - DPA	REVISED -	STATE OF ILLINOIS DEPARTMENT OF TRANSPORTATION	DISTRICT 2 BRIDGE PATCHING GENERAL PLAN & ELEVATION 081-0018 & 081-0019	F.A.I. RTE.	SECTION	COUNTY	TOTAL SHEETS	SHEET NO.
MODEL NAME =	PLOT SCALE = 50.000' / in.	DRAWN - MWH	REVISED -			280	81-1(B-1,HB,HB-1,HB-2,VB,VB-1)R	ROCK ISLAND	503	124
MOTS	PLOT DATE = 07/23/2010	CHECKED - DPA	REVISED -					CONTRACT NO. 64815		
		DATE - 07/23/10	REVISED -		SCALE: NTS / SHEET NO. OF SHEETS / STA. TO STA.	FED. ROAD DIST. NO. 7	ILLINOIS	FED. AID PROJECT 7		

F.A.I.RT. 280 | MWH 07/29/10
SECTION | MWH 07/29/10
COUNTY | DPA 07/29/10

HANSON
Hanson Professional Services Inc.

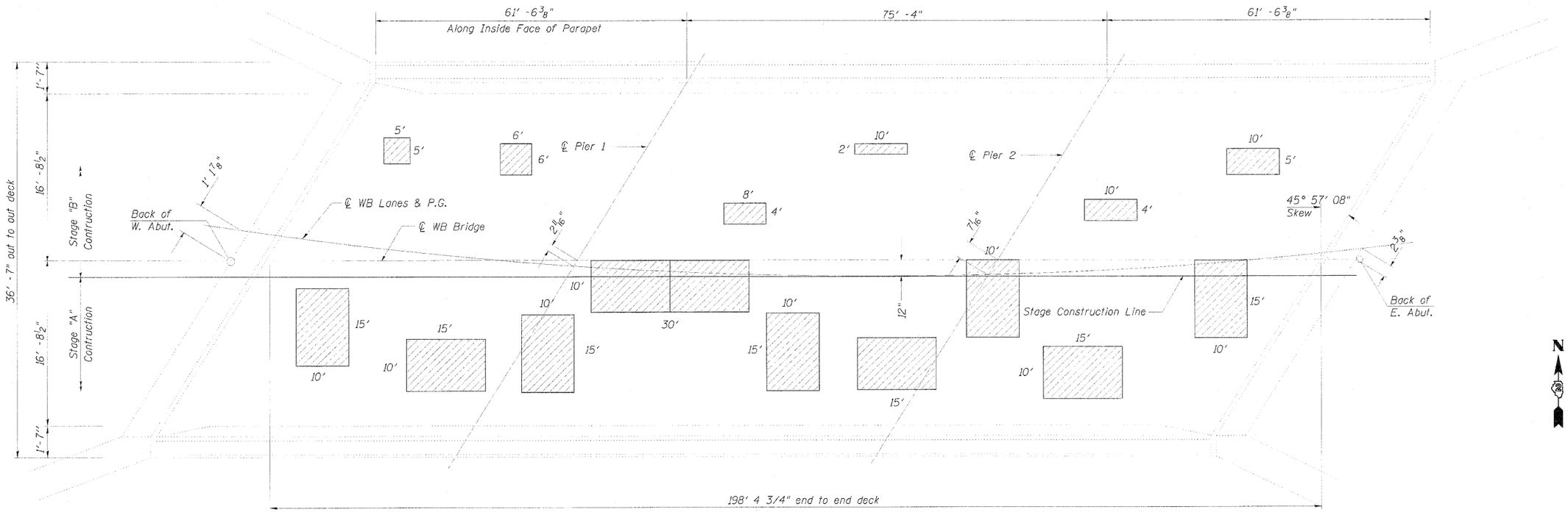

Legend

Potential Deck Slab Repair (Partial)

Date of Survey 10/2009

PLAN

Areas shown for repair are potential areas of deck slab repair. Actual locations and quantities to be determined in the field. Resident Engineer to contact District Bridge Office for assistance with locating patches.

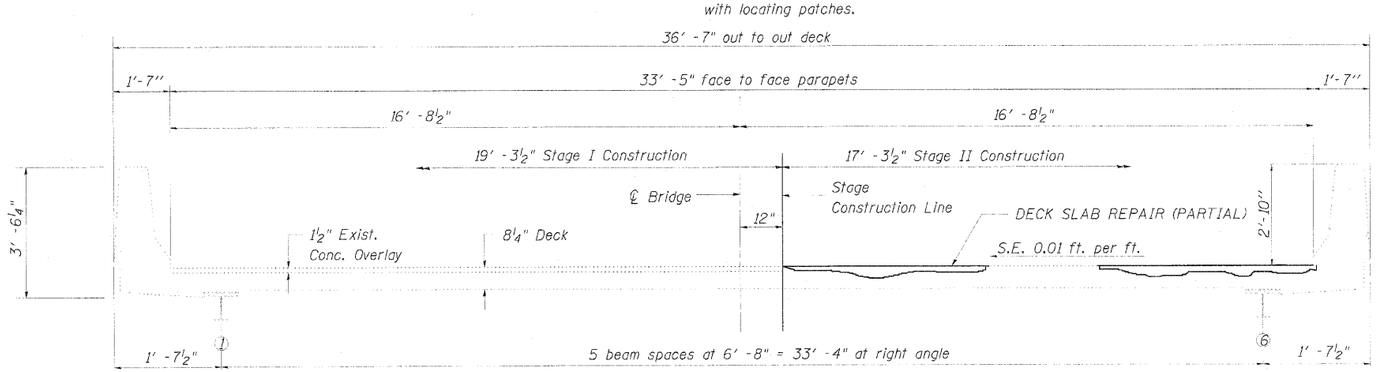

CROSS SECTION
(Looking East)

BILL OF MATERIAL
Westbound

DECK SLAB REPAIR (FULL DEPTH, TYPE I)	SQ YD	26
DECK SLAB REPAIR (FULL DEPTH, TYPE II)	SQ YD	14
DECK SLAB REPAIR (PARTIAL)	SQ YD	128

SUPERSTRUCTURE
WEST BOUND LANES
STRUCTURE NO. 081-0019 (W.B.)
FAI ROUTE 280
Rock Island County
Sta. 232+86.50

FILE NAME = 0284818 sht-bmpatcndgn	USER NAME = Hussa0241	DESIGNED - DPA	REVISED -
MODEL NAME =	PLOT SCALE = 50.0238' / in.	DRAWN - MWH	REVISED -
PLOT =	PLOT DATE = 07/22/2010	CHECKED - DPA	REVISED -
		DATE - 07/23/10	REVISED -

STATE OF ILLINOIS
DEPARTMENT OF TRANSPORTATION

DISTRICT 2 BRIDGE PATCHING
SUPERSTRUCTURE
081-0019

SCALE: NTS | SHEET NO. OF SHEETS | STA. TO STA.

F.A.I. RTE.	SECTION	COUNTY	TOTAL SHEETS	SHEET NO.
280	81-1(B-1,HB,HB-1,HB-2,VB,VB-1)R	ROCK ISLAND	503	125
		CONTRACT NO. 64815		

FED. ROAD DIST. NO. 7 | ILLINOIS | FED. AID PROJECT 7

HANSON
Hanson Professional Services Inc.

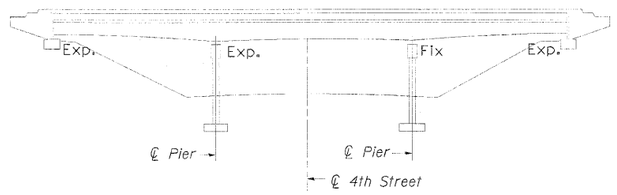

Elevation

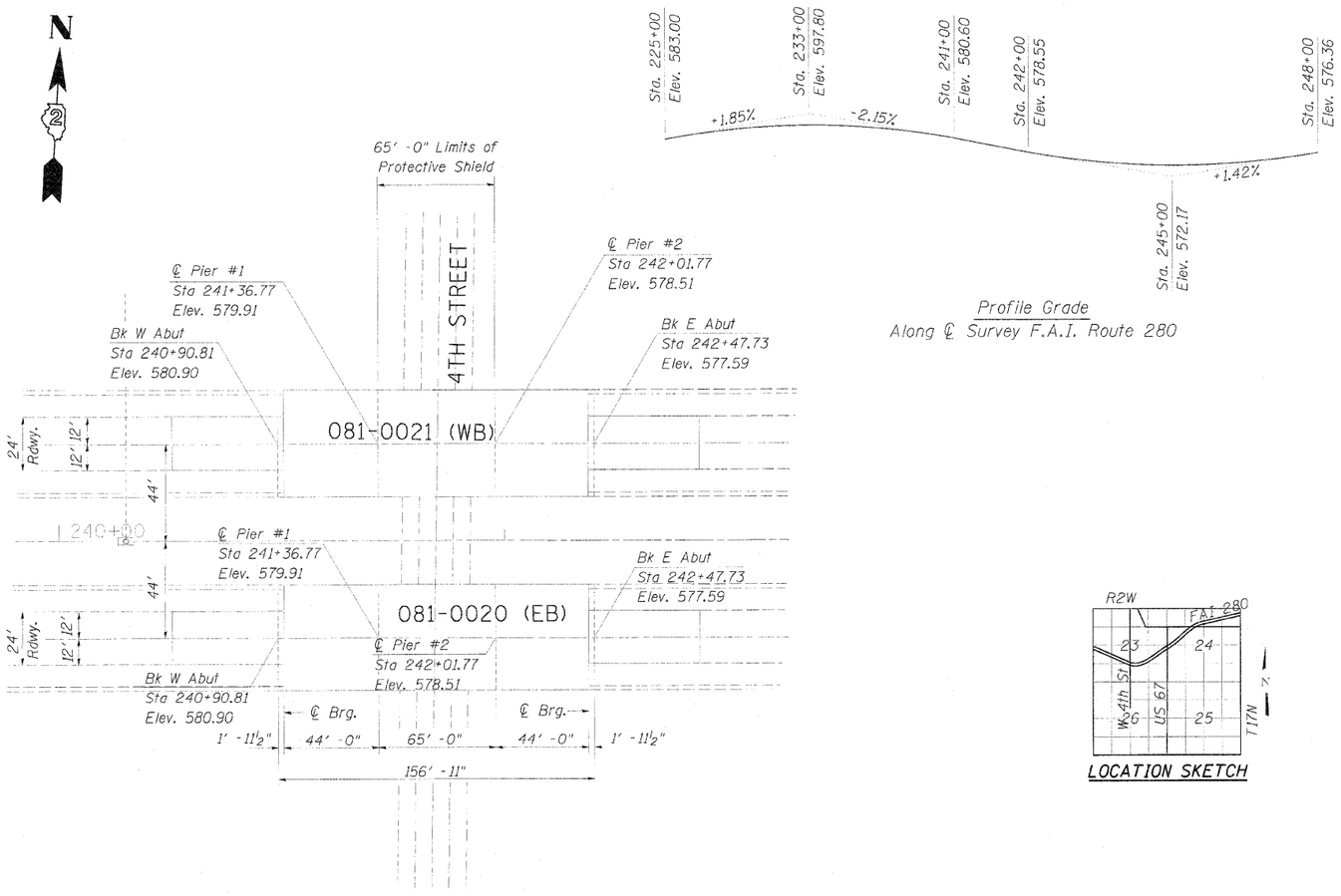

Plan

Profile Grade
Along ℄ Survey F.A.I. Route 280

GENERAL NOTES

Plan dimensions and details relative to existing plans are subject to nominal construction variations. The Contactor shall field verify existing dimensions and details affecting new construction and make necessary approved adjustments prior to construction or ordering of materials. Such variations shall not be cause for additional compensation for a change in scope of the work, however, the Contractor will be paid for the quantity actually furnished at the unit price bid for the work

Existing reinforcement if exposed shall be cleaned and incorporated into the new construction. Cost included with Deck Slab Repair.

LOCATION SKETCH

GENERAL PLAN & ELEVATION
I-280 OVER WEST 4th STREET
FAI ROUTE 280
STA. 241+69.27
ROCK ISLAND COUNTY
STRUCTURE NUMBER 081-0021 (W.B.)

FILE NAME = 0280481bridgeplan	USER NAME = Hanson, Will	DESIGNED - DPA	REVISED -
		DRAWN - MWH	REVISED -
MODEL NAME =	PLOT SCALE = 50.0000 ' / in.	CHECKED - DPA	REVISED -
NOTE	PLOT DATE = 07/23/2010	DATE - 07/23/10	REVISED -

STATE OF ILLINOIS
DEPARTMENT OF TRANSPORTATION

DISTRICT 2 BRIDGE PATCHING
GENERAL PLAN & ELEVATION
081-0020 & 081-0021

SCALE: NTS | SHEET NO. OF SHEETS | STA. TO STA.

F.A.I. RTE.	SECTION	COUNTY	TOTAL SHEETS	SHEET NO.
280	81-1IB-1,4B,HB-1,HB-2,VB,VB-1IR	ROCK ISLAND	503	126
		CONTRACT NO. 64815		

FED. ROAD DIST. NO. 7 ILLINOIS FED. AID PROJECT 7

APPROVED	MWH	07/23/10
CHECKED	MWH	07/23/10
DESIGNED	MWH	07/23/10

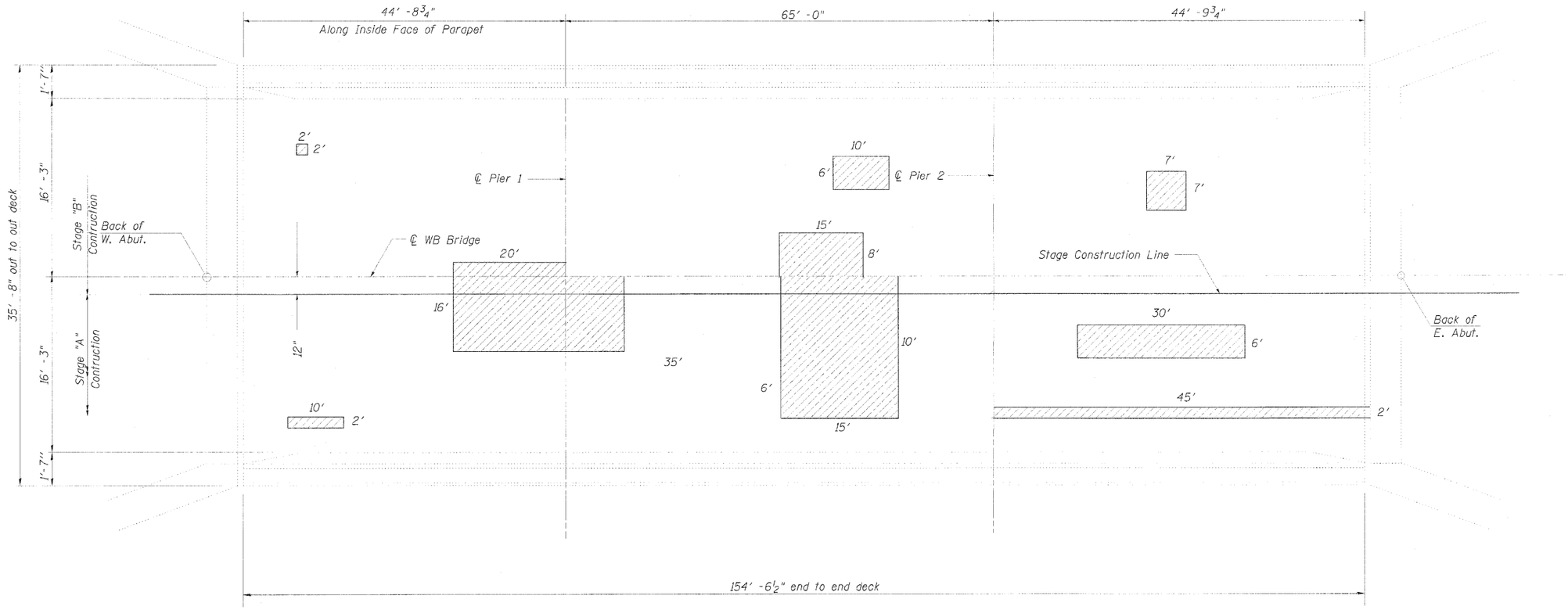

Legend

Potential Deck Slab Repair (Partial)

Date of Survey 10/2009

PLAN

Areas shown for repair are potential areas of deck slab repair. Actual locations and quantities to be determined in the field. Resident Engineer to contact District Bridge Office for assistance with locating patches.

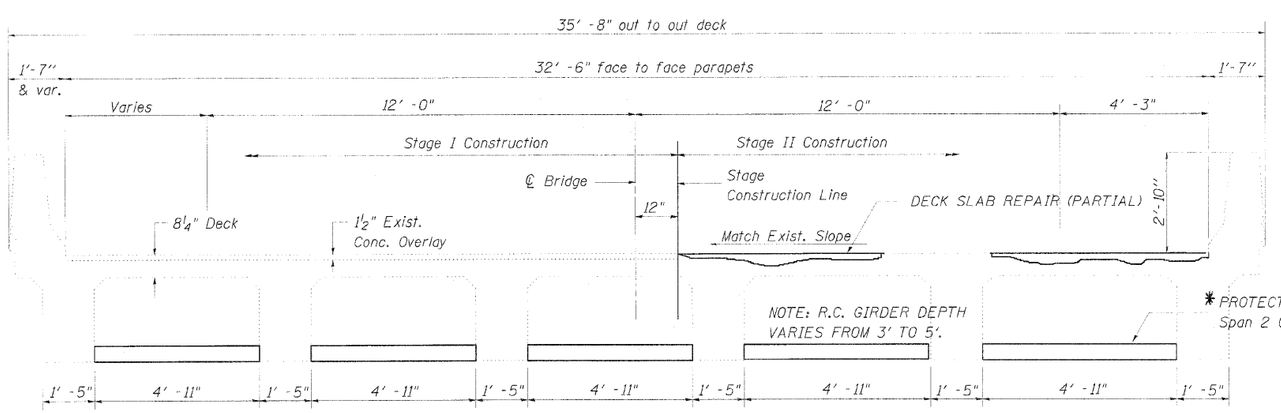

CROSS SECTION

(Looking East)

* Drilling into concrete T-girder's stem is not allowed.

BILL OF MATERIAL

Westbound

PROTECTIVE SHIELD	SQ YD	235
DECK SLAB REPAIR (FULL DEPTH, TYPE I)	SQ YD	21
DECK SLAB REPAIR (FULL DEPTH, TYPE II)	SQ YD	11
DECK SLAB REPAIR (PARTIAL)	SQ YD	129

SUPERSTRUCTURE
WEST BOUND LANES
STRUCTURE NO. 081-0021 (W.B.)
FAI ROUTE 280
Rock Island County
Sta. 241+69.27

HANSON
Hanson Professional Services Inc.

LAYOUT	MPH	07/23/10	
DESIGN	MWH	07/23/10	
REVIEW	DPA	07/23/10	

FILE NAME = D:\04815-sht-bridge-patch.dgn
MODEL NAME =
MDTS

USER NAME = [illegible]
PLOT SCALE = 50.0000 / in.
PLOT DATE = 07\22\2010

DESIGNED -	DPA	REVISED -	
DRAWN	MWH	REVISED -	
CHECKED	DPA	REVISED -	
DATE	07/23/10	REVISED -	

STATE OF ILLINOIS
DEPARTMENT OF TRANSPORTATION

DISTRICT 2 BRIDGE PATCHING
SUPERSTRUCTURE
081-0021

SCALE: NTS | SHEET NO. OF SHEETS | STA. TO STA.

F.A.I. RTE.	SECTION	COUNTY	TOTAL SHEETS	SHEET NO.
280	81-1HB-1,HB,HB-1,HB-2,VB,VB-1)R	ROCK ISLAND	503	127
		CONTRACT NO. 64815		

FED. ROAD DIST. NO. 7 | ILLINOIS | FED. AID PROJECT 7

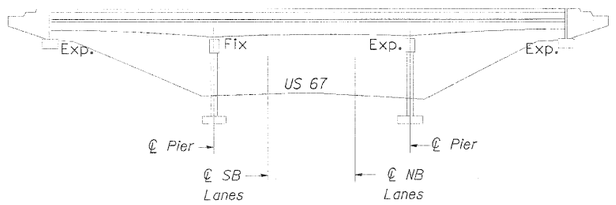

Elevation

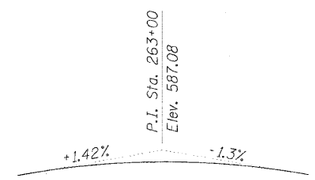

Profile Grade
Along ℄ Survey F.A.I. Route 280

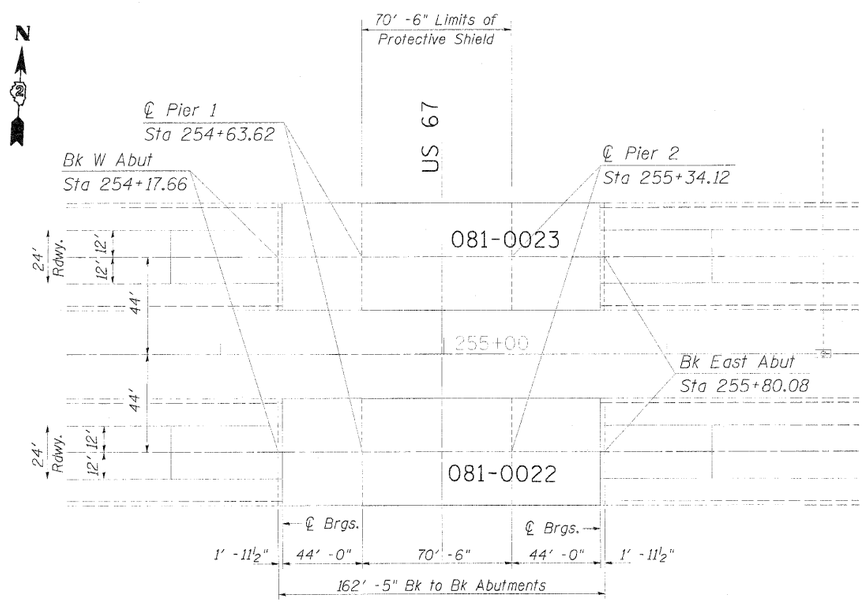

Plan

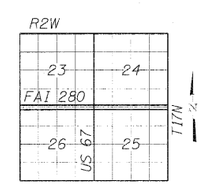

LOCATION SKETCH

GENERAL NOTES

Plan dimensions and details relative to existing plans are subject to nominal construction variations. The Contactor shall field verify existing dimensions and details affecting new construction and make necessary approved adjustments prior to construction or ordering of materials. Such variations shall not be cause for additional compensation for a change in scope of the work, however, the Contractor will be paid for the quantity actually furnished at the unit price bid for the work

Existing reinforcement if exposed shall be cleaned and incorporated into the new construction. Cost included with Deck Slab Repair.

GENERAL PLAN & ELEVATION
I-280 OVER US ROUTE 67
FAI ROUTE 280
STA. 254+98.87
ROCK ISLAND COUNTY
STRUCTURE NUMBER 081-0023 (W.B.)

HANSON
Hanson Professional Services Inc.

LAYOUT	MWH	07/26/10	
DRAWN	MWH	07/26/10	
DESIGNED	DPA	07/23/10	
CHECKED	DPA	07/23/10	

FILE NAME = D2548"Bridge Deck patching"	USER NAME = mwaw0841	DESIGNED - DPA	REVISED -
MODEL NAME =	PLOT SCALE = 32.0000 ' / in.	DRAWN - MWH	REVISED -
MDOT	PLOT DATE = 2010/22\2010	CHECKED - DPA	REVISED -
		DATE - 07/23/10	REVISED -

STATE OF ILLINOIS
DEPARTMENT OF TRANSPORTATION

DISTRICT 2 BRIDGE PATCHING
GENERAL PLAN & ELEVATION
081-0022 & 081-0023

SCALE: NTS | SHEET NO. OF SHEETS | STA. TO STA.

F.A.I. RTE.	SECTION	COUNTY	TOTAL SHEETS	SHEET NO.
280	81-1,HB-1,HB,HB-1,HB-2,VB,VB-1,R	ROCK ISLAND	503	128
		CONTRACT NO. 64815		

FED. ROAD DIST. NO. 7 | ILLINOIS FED. AID PROJECT 7

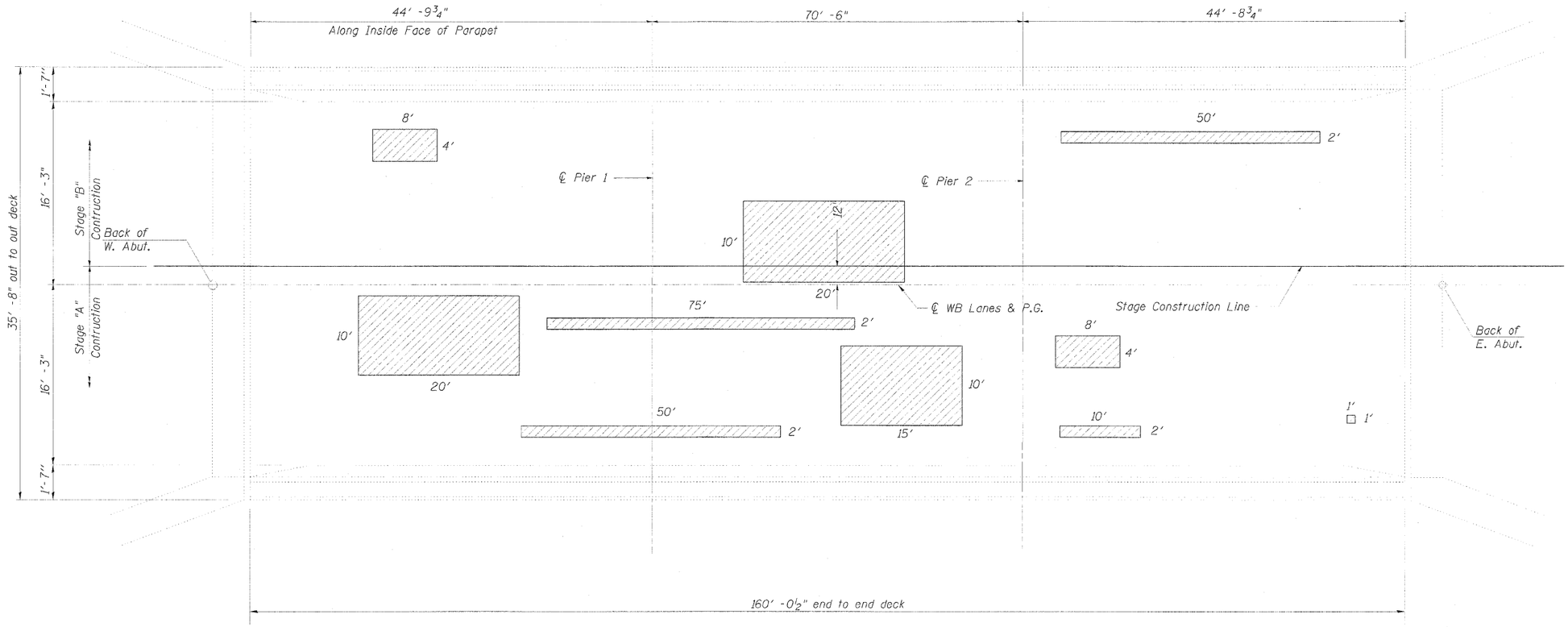

Legend

Potential Deck Slab Repair (Partial)

Date of Survey 10/2009

PLAN

Areas shown for repair are potential areas of deck slab repair. Actual locations and quantities to be determined in the field. Resident Engineer to contact District Bridge Office for assistance with locating patches.

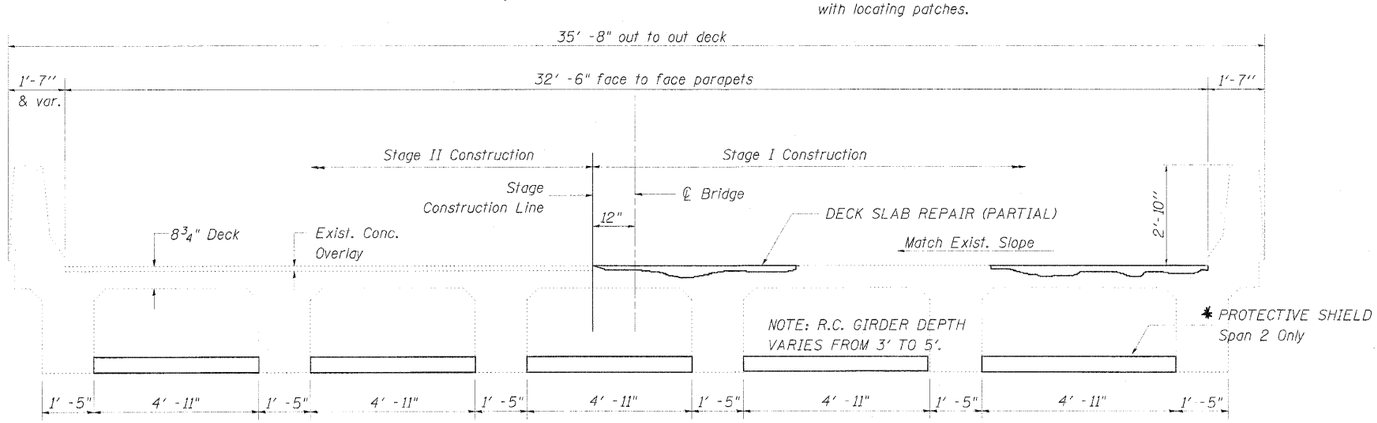

CROSS SECTION
Looking West

✱ Drilling into concrete T-girder's stem is not allowed.

BILL OF MATERIAL
Westbound

PROTECTIVE SHIELD	SQ YD	253
DECK SLAB REPAIR (FULL DEPTH, TYPE I)	SQ YD	23
DECK SLAB REPAIR (FULL DEPTH, TYPE II)	SQ YD	10
DECK SLAB REPAIR (PARTIAL)	SQ YD	110

SUPERSTRUCTURE
WEST BOUND LANES
STRUCTURE NO. 081-0023 (W.B.)
FAI ROUTE 280
Rock Island County
Sta. 254+98.87

FILE NAME = D264815-sht-bridgepatch.dgn	USER NAME = Hansu8241	DESIGNED DPA	REVISED -
		DRAWN - MWH	REVISED -
MODEL NAME =	PLOT SCALE = 50.0000 ' / in.	CHECKED - DPA	REVISED -
NOTE	PLOT DATE = 07/22/2010	DATE - 07/23/10	REVISED -

STATE OF ILLINOIS
DEPARTMENT OF TRANSPORTATION

DISTRICT 2 BRIDGE PATCHING
SUPERSTRUCTURE
081-0023

SCALE: NTS | SHEET NO. OF SHEETS | STA. TO STA.

F.A.I. RTE.	SECTION	COUNTY	TOTAL SHEETS	SHEET NO.
280	81-1,1B-1,HB,HB-1,HB-2,VB,VB-1,R	ROCK ISLAND	503	129

CONTRACT NO. 64815

FED. ROAD DIST. NO. 7 | ILLINOIS | FED. AID PROJECT 7

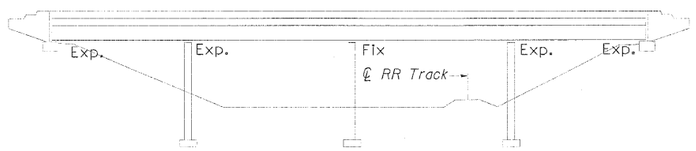

Elevation

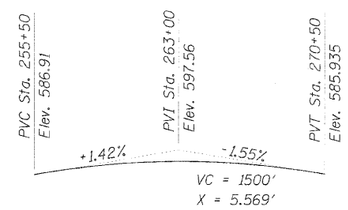

Profile Grade
Along ℄ Survey F.A.I. Route 280

GENERAL NOTES

Plan dimensions and details relative to existing plans are subject to nominal construction variations. The Contactor shall field verify existing dimensions and details affecting new construction and make necessary approved adjustments prior to construction or ordering of materials. Such variations shall not be cause for additional compensation for a change in scope of the work, however, the Contractor will be paid for the quantity actually furnished at the unit price bid for the work

Existing reinforcement if exposed shall be cleaned and incorporated into the new construction. Cost included with Deck Slab Repair.

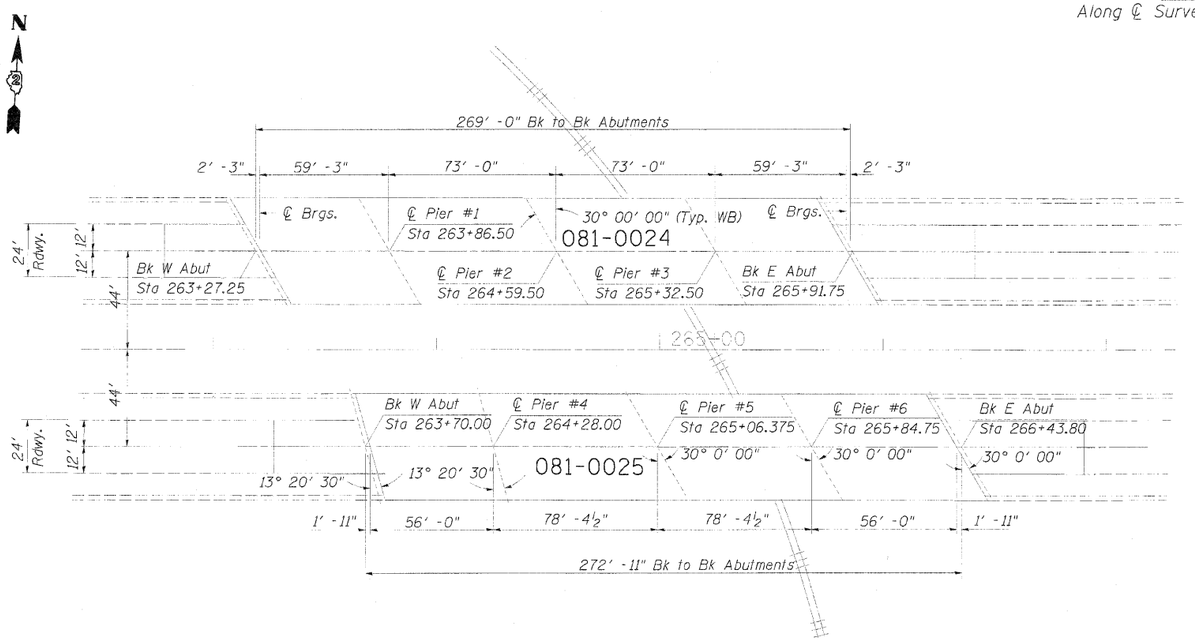

Plan

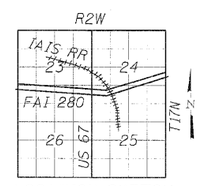

LOCATION SKETCH

GENERAL PLAN & ELEVATION
I-280 OVER IAIS RAILROAD
FAI ROUTE 280
STA. 264+83.02
ROCK ISLAND COUNTY
STRUCTURE NUMBER 081-0024 (W.B.)

HANSON
Hanson Professional Services Inc.

LAYOUT	MWH	07/23/10
DESIGN	MWH	07/23/10
REVIEW	DPA	07/23/10

FILE NAME = 1264815-sht-bridgepatchlayo	USER NAME = tlowe282411	DESIGNED - DPA	REVISED -
MODEL NAME =		DRAWN - MWH	REVISED -
MOD =	PLOT SCALE = 50.0000 / in.	CHECKED - DPA	REVISED -
	PLOT DATE = 07/23/2010	DATE - 07/23/10	REVISED -

STATE OF ILLINOIS
DEPARTMENT OF TRANSPORTATION

DISTRICT 2 BRIDGE PATCHING
GENERAL PLAN & ELEVATION
081-0024 & 081-0025

SCALE: NTS | SHEET NO. OF SHEETS | STA. TO STA.

F.A.I. RTE.	SECTION	COUNTY	TOTAL SHEETS	SHEET
280	91-1(B-1,HB,HB-1,HB-2,VB,VB-1)R	ROCK ISLAND	503	130

CONTRACT NO. 64815

FED. ROAD DIST. NO. 7 | ILLINOIS | FED. AID PROJECT 7

HANSON
Hanson Professional Services Inc.

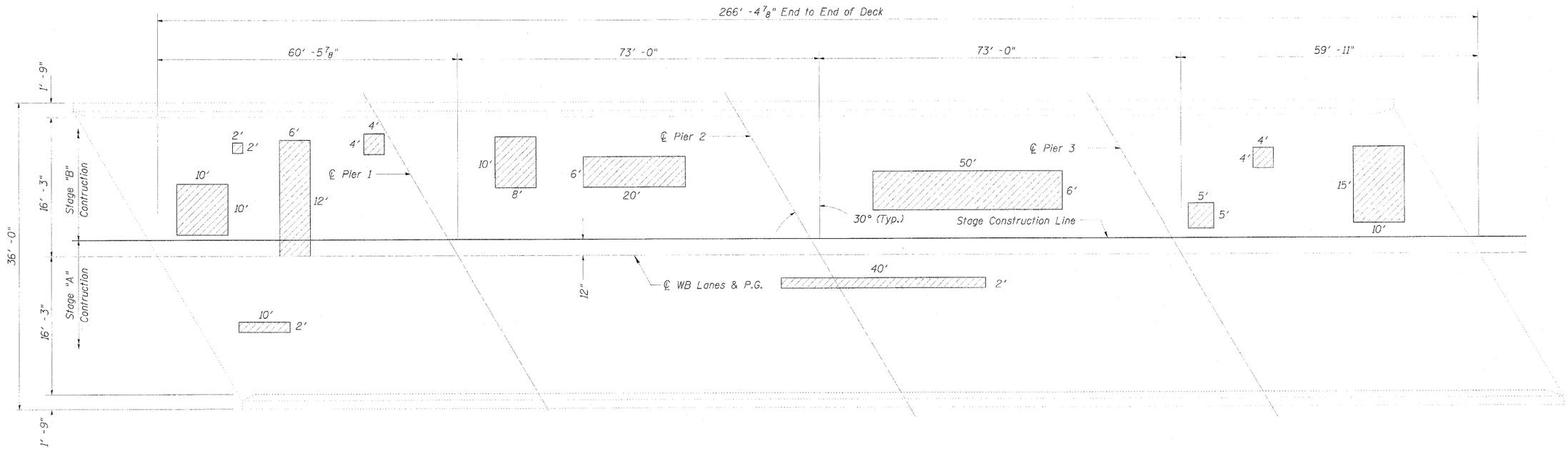

PLAN

Areas shown for repair are potential areas of deck slab repair.
Actual locations and quantities to be determined in the field.
Resident Engineer to contact District Bridge Office for assistance with locating patches.

Legend

Potential Deck Slab Repair (Partial)

Date of Survey 10/2009

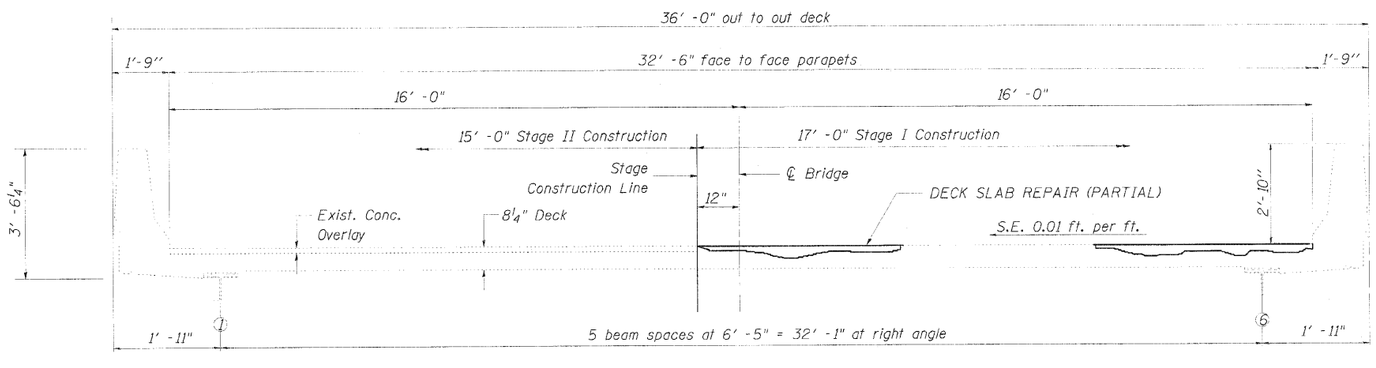

CROSS SECTION

(Looking East)

BILL OF MATERIAL

Westbound

DECK SLAB REPAIR (FULL DEPTH, TYPE I)	SQ YD	35
DECK SLAB REPAIR (FULL DEPTH, TYPE II)	SQ YD	19
DECK SLAB REPAIR (PARTIAL)	SQ YD	110

SUPERSTRUCTURE
WEST BOUND LANES
STRUCTURE NO. 081-0024 (W.B.)
FAI ROUTE 280
Rock Island County
Sta. 264+83.02

LAYOUT	MWH	07/26/10	FILE NAME =	USER NAME = Hussa0841	DESIGNED - DPA	REVISED -	STATE OF ILLINOIS DEPARTMENT OF TRANSPORTATION	DISTRICT 2 BRIDGE PATCHING SUPERSTRUCTURE 081-0025	F.A.I. RTE.	SECTION	COUNTY	TOTAL SHEETS	SHEET NO.
COMPUT	MWH	07/26/10	D2348.5-pmt-br-patch.dgn		DRAWN - MWH	REVISED -			280	81-1KB-1,HB,HB-1,HB-2,VB,VB-1R	ROCK ISLAND	503	131
REVISED	DPA	07/23/10	MODEL NAME =	PLOT SCALE = 30.0000 ' / in.	CHECKED - DPA	REVISED -		SCALE: NTS SHEET NO. OF SHEETS STA. TO STA.			CONTRACT NO. 64815		
			MOT10	PLOT DATE = 07\22\2010	DATE - 07/23/10	REVISED -			FED. ROAD DIST. NO. 7	ILLINOIS	FED. AID PROJECT 7		

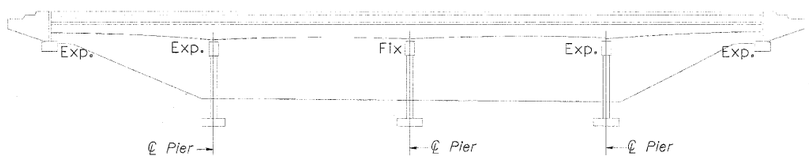

Elevation

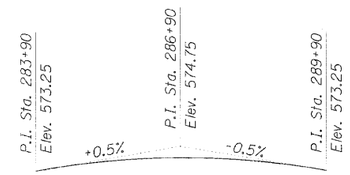

Profile Grade
Along ℄ Survey F.A.I. Route 280

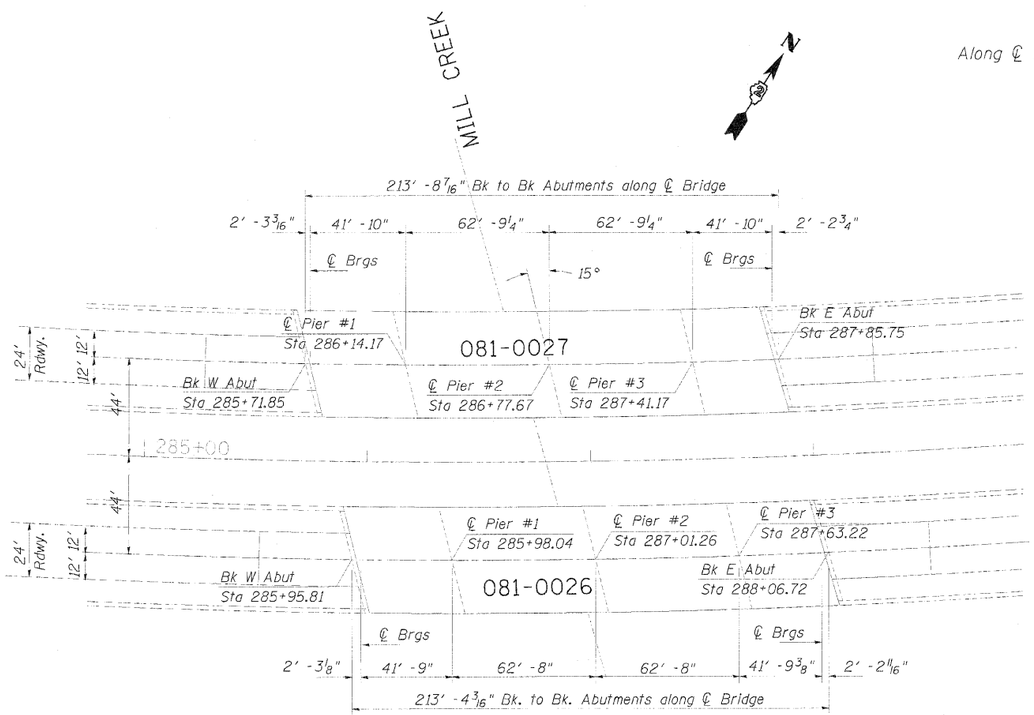

Plan

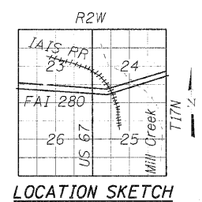

LOCATION SKETCH

GENERAL NOTES

Plan dimensions and details relative to existing plans are subject to nominal construction variations. The Coniactor shall field verify existing dimensions and details affecting new construction and make necessary approved adjustments prior to construction or ordering of materials. Such variations shall not be cause for additional compensation for a change in scope of the work, however, the Contractor will be paid for the quantity actually furnished at the unit price bid for the work

Existing reinforcement if exposed shall be cleaned and incorporated into the new construction. Cost included with Deck Slab Repair.

GENERAL PLAN & ELEVATION
I-280 OVER MILL CREEK
FAI ROUTE 280
STA. 286+90
ROCK ISLAND COUNTY
STRUCTURE NUMBER 081-0027 (W.B.)

HANSON
Hanson Professional Services Inc.

LAYOUT	MWH	07/26/10	
ISSUED	MWH	07/26/10	
REVISED	DPA	07/23/10	

FILE NAME = D254915-sht-hanson-sketch.dgn	USER NAME = Hussa20411	DESIGNED - DPA	REVISED -
MODEL NAME = KCTII	PLOT SCALE = 50.0000 ' / in.	DRAWN - MWH	REVISED -
	PLOT DATE = 7/23/2010	CHECKED - DPA	REVISED -
		DATE - 07/23/10	REVISED -

STATE OF ILLINOIS
DEPARTMENT OF TRANSPORTATION

DISTRICT 2 BRIDGE PATCHING
GENERAL PLAN & ELEVATION
081-0026 & 081-0027

SCALE: NTS | SHEET NO. OF SHEETS | STA. TO STA.

F.A.I. RTE.	SECTION	COUNTY	TOTAL SHEETS	SHEET NO.
280	81-1(B-1,HB,HB-1,HB-2,VB,VB-1)R	ROCK ISLAND	503	132

CONTRACT NO. 64815

FED. ROAD DIST. NO. 7 | ILLINOIS FED. AID PROJECT 7

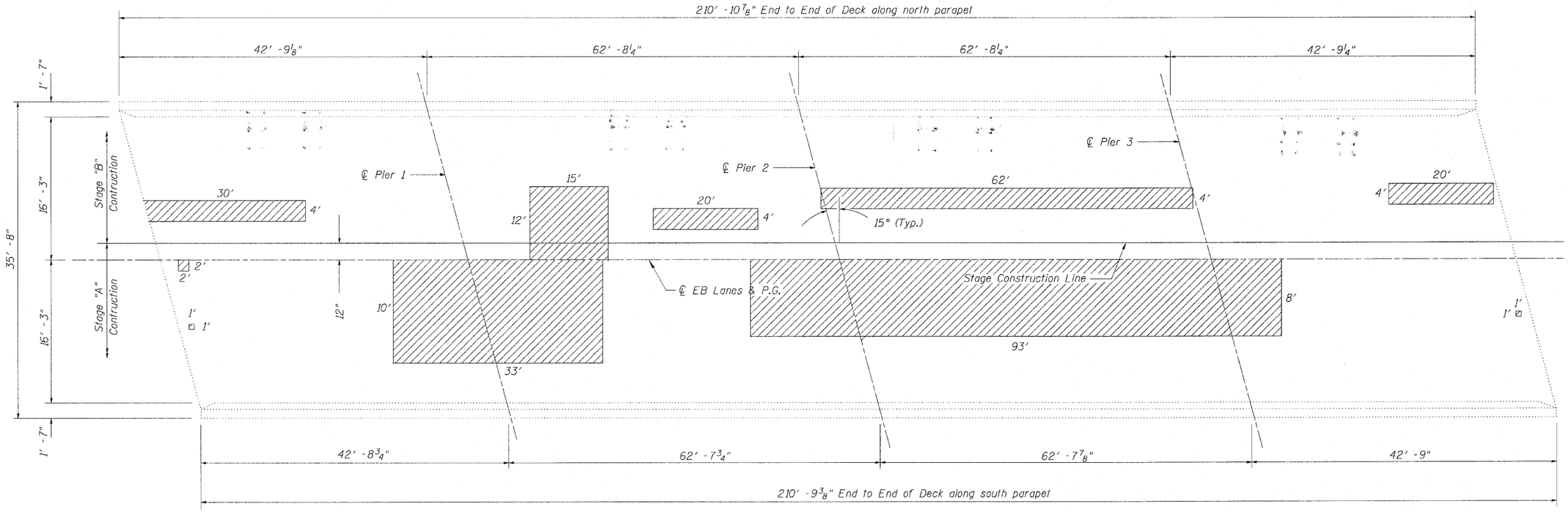

Legend

Potential Deck Slab Repair (Partial)

Date of Survey 10/2009

PLAN

Areas shown for repair are potential areas of deck slab repair.
Actual locations and quantities to be determined in the field.
Resident Engineer to contact District Bridge Office for assistance with locating patches.

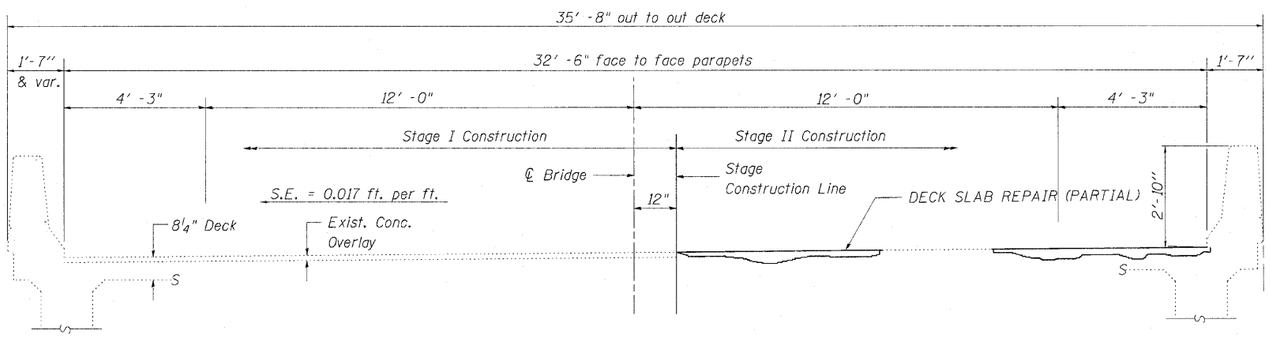

CROSS SECTION

(Looking East)

BILL OF MATERIAL

Westbound

DECK SLAB REPAIR (FULL DEPTH, TYPE I)	SQ YD	28
DECK SLAB REPAIR (FULL DEPTH, TYPE II)	SQ YD	15
DECK SLAB REPAIR (PARTIAL)	SQ YD	200

SUPERSTRUCTURE
WEST BOUND LANES
STRUCTURE NO. 081-0027 (W.B.)
FAI ROUTE 280
Rock Island County
Sta. 286+90

• 81-1(B-1, HB, HB-1, HB-2, VB, VB-1)R

FILE NAME = c:\pw_work\pwidot\condermanee\d0179717\p204502_br-patch-sht.dgn	USER NAME = condermanee	DESIGNED - ___	REVISED - ___	STATE OF ILLINOIS DEPARTMENT OF TRANSPORTATION	SUPERSTRUCTURE 081-0027	F.A.I. RTE. 280	SECTION *	COUNTY ROCK ISLAND	TOTAL SHEETS	SHEET NO. 133 A
	PLOT SCALE = 50.0000 ' / IN.	DRAWN - ___	REVISED - ___					CONTRACT NO. 64815		
	PLOT DATE = Tue Aug 31 10:00:42 2010	CHECKED - ___	REVISED - ___		SCALE: _____ SHEET NO. __ OF ___ SHEETS STA. _____ TO STA. _____			ILLINOIS FED. AID PROJECT		
		DATE - _____	REVISED - ___							

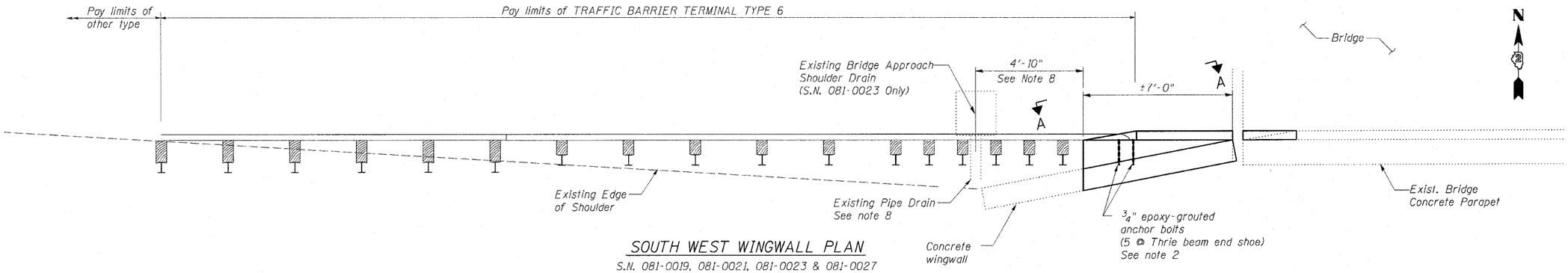

SOUTH WEST WINGWALL PLAN

S.N. 081-0019, 081-0021, 081-0023 & 081-0027

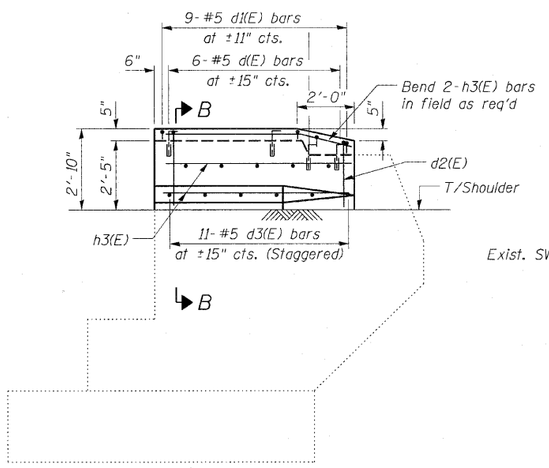

VIEW A-A

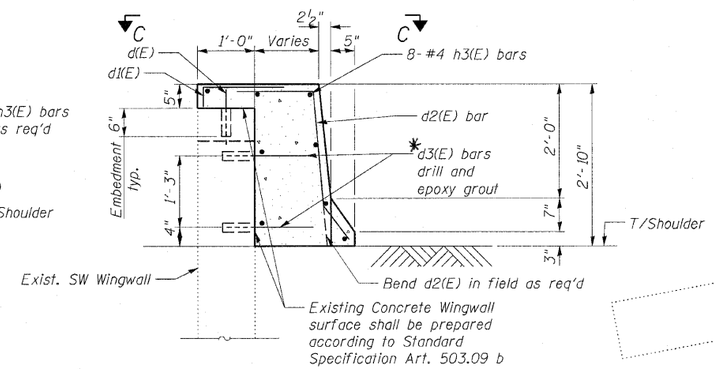

SECTION B-B

✱ Drilling and epoxy grouting to be done according to Art. 584 of the Standard Specs.

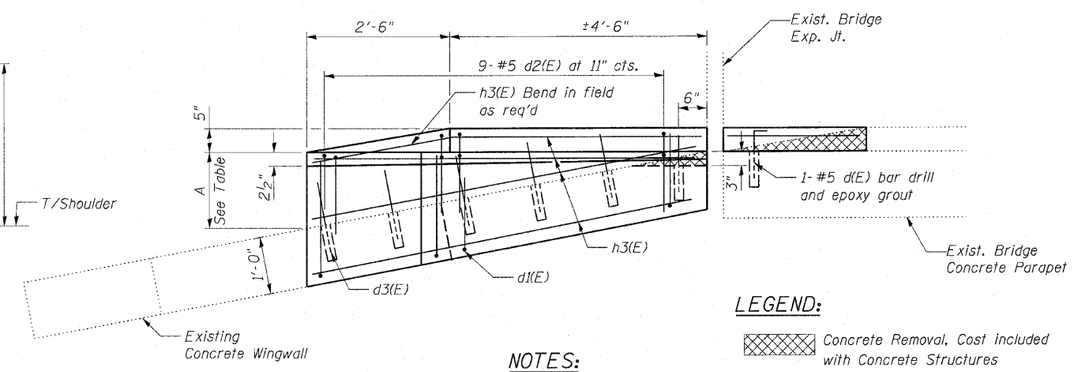

SECTION C-C

Verify dimensions in the field

S.N.	Dimension A
081-0019	1'-9"
081-0021	1'-9"
081-0023	1'-9"
081-0027	1'-8"

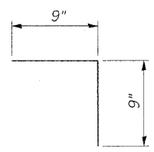

BAR d(E)

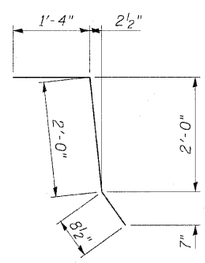

BAR d2(E)

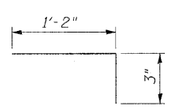

BAR d1(E)

BILL OF MATERIAL

Total for 4 Structures

Bar	Number	Size	Length	Shape
h3(E)	32	#4	6'-8"	
d(E)	28	#5	1'-6"	
d1(E)	36	#5	1'-5"	
d2(E)	36	#5	4'-0½"	
d3(E)	44	#5	1'-3"	
REINFORCEMENT BARS, EPOXY COATED			POUND	450
CONCRETE STRUCTURES			CU YD	3.7
PROTECTIVE COAT			SQ YD	17

LEGEND:

Concrete Removal. Cost included with Concrete Structures

NOTES:

1. Plan dimensions and details relative to existing plans are subject to nominal construction variations. The Contractor shall field verify existing dimensions and details affecting new construction and make necessary approved adjustments prior to construction or ordering of materials. Such variations shall not be cause for additional compensation for a change in scope of the work, however, the Contractor will be paid for the quantity actually furnished at the unit price bid for the work.
2. See Standard 631033-09 for other details and notes.
3. The cost of drilling and epoxy grouting of bars is included with **Reinforcement Bars, Epoxy Coated.**
4. Protective Coat shall be applied to all new concrete areas.
5. Reinforcement bars shall conform to the requirements of ASTM A 706 Gr 60. See Special Provisions.
6. Reinforcement bars designated (E) shall be epoxy coated.
7. Existing reinforcement shall be cleaned and incorporated into the new construction. Cost included with Concrete Structures.
8. For Structure S.N. 081-0023 only - Locate the pipe drain and to establish the end of new widened wingwall at ±4'-10" from ℄ of pipe to avoid conflict with the guardrail posts. Use extreme caution during post installation to prevent damage to the pipe.

* 81-1(B-1, HB, HB-1, HB-2, VB, VB-1)R

FILE NAME = c:\pw_work\pwidot\condermanee\d0179717\b284502_br-patch-sht.dgn	USER NAME = condermanee	DESIGNED - ---	REVISED - ---
		DRAWN - ---	REVISED - ---
	PLOT SCALE = 50.0000 ' / IN.	CHECKED - ---	REVISED - ---
	PLOT DATE = Tue Aug 31 10:00:34 2010	DATE - -------	REVISED - ---

STATE OF ILLINOIS
DEPARTMENT OF TRANSPORTATION

TRAFFIC BARRIER TERMINAL, TYPE 6 ATTACHMENT
081-0019, 081-0021, 081-0023, 081-0027

SCALE: ------- | SHEET NO. -- OF --- SHEETS | STA. ------- TO STA. -------

F.A.I. RTE.	SECTION	COUNTY	TOTAL SHEETS	SHEET NO.
280	*	ROCK ISLAND		133 B
		CONTRACT NO. 64815		
		ILLINOIS FED. AID PROJECT		

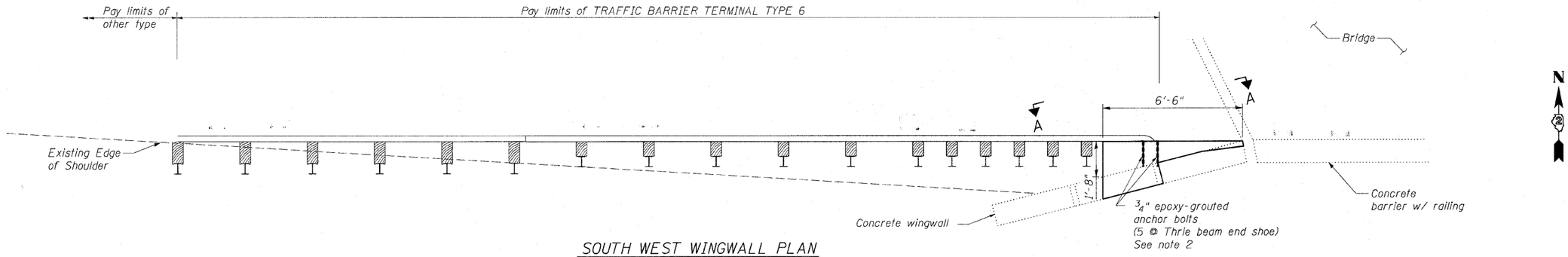

SOUTH WEST WINGWALL PLAN

S.N. 081-0025

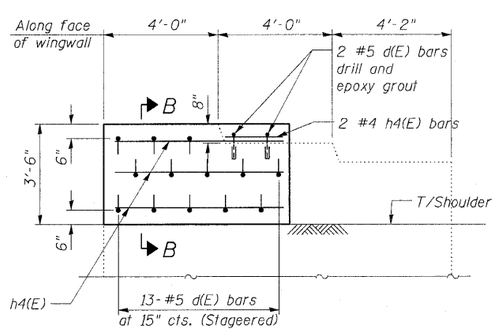

VIEW A-A

h5(E), v(E) & d4(E) rebars not shown for clarity

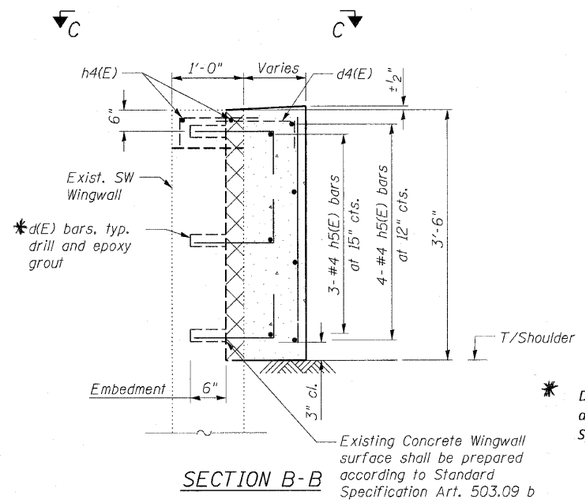

SECTION B-B

* Drilling and epoxy grouting to be done according to Art. 584 of the Standard Specs.

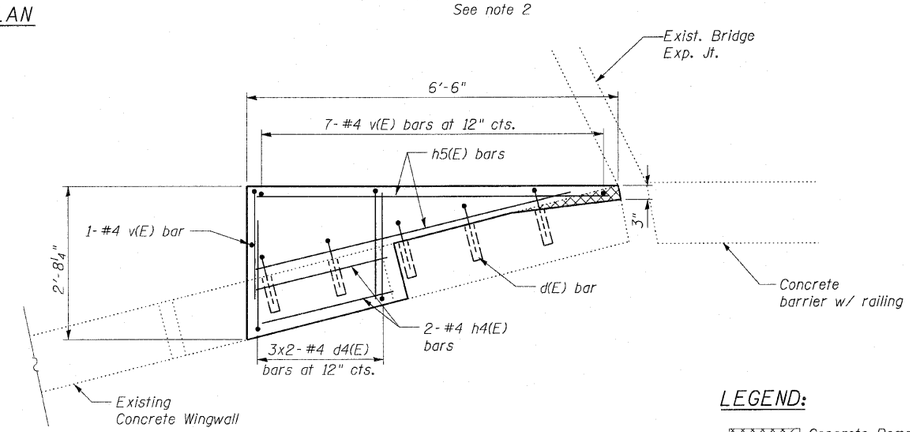

VIEW C-C

Verify dimensions in the field

LEGEND:

Concrete Removal, Cost included with Concrete Structures

NOTES:

1. Plan dimensions and details relative to existing plans are subject to nominal construction variations. The Contractor shall field verify existing dimensions and details affecting new construction and make necessary approved adjustments prior to construction or ordering of materials. Such variations shall not be cause for additional compensation for a change in scope of the work, however, the Contractor will be paid for the quantity actually furnished at the unit price bid for the work.
2. See Standard 631033-09 for other details and notes.
3. The cost of drilling and epoxy grouting of bars is included with **Reinforcement Bars, Epoxy Coated.**
4. Protective Coat shall be applied to all new concrete areas.
5. Reinforcement bars shall conform to the requirements of ASTM A 706 Gr 60. See Special Provisions.
6. Reinforcement bars designated (E) shall be epoxy coated.
7. Existing reinforcement shall be cleaned and incorporated into the new construction. Cost included with Concrete Structures.

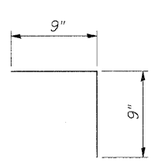

BAR d(E)

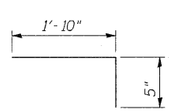

BAR d4(E)

BILL OF MATERIAL

Bar	Number	Size	Length	Shape
d(E)	15	#5	1'-6"	
d4(E)	6	#4	2'-3"	
h4(E)	2	#4	2'-5"	
h5(E)	7	#4	6'-2"	
v(E)	8	#4	3'-2"	

REINFORCEMENT BARS, EPOXY COATED	POUND	90
CONCRETE STRUCTURES	CU YD	1.2
PROTECTIVE COAT	SQ YD	4

* 81-1(B-1, HB, HB-1, HB-2, VB, VB-1)R

FILE NAME = c:\pw_work\pwidot\candermanee\d2179717\D204502_br-patch-sht.dgn	USER NAME = candermanee	DESIGNED - ---	REVISED - ---
		DRAWN - ---	REVISED - ---
	PLOT SCALE = 50.0000 ' / IN.	CHECKED - ---	REVISED - ---
	PLOT DATE = Tue Aug 31 10:02:27 2010	DATE - -------	REVISED - ---

STATE OF ILLINOIS
DEPARTMENT OF TRANSPORTATION

TRAFFIC BARRIER TERMINAL, TYPE 6 ATTACHMENT
081-0025

SCALE: ------- | SHEET NO. -- OF --- SHEETS | STA. ------- TO STA. -------

F.A.I. RTE.	SECTION	COUNTY	TOTAL SHEETS	SHEET NO.
280	*	ROCK ISLAND		133 C
		CONTRACT NO. 64815		
		ILLINOIS FED. AID PROJECT		

Bench Marks:
District 2 Network Monument, I-280 Sta. 117+51.27, 0.65' Rt., Elev. 565.81
District 2 Network Monument, I-280 Sta. 92+99.54, 0.82' Rt., Elev. 563.05

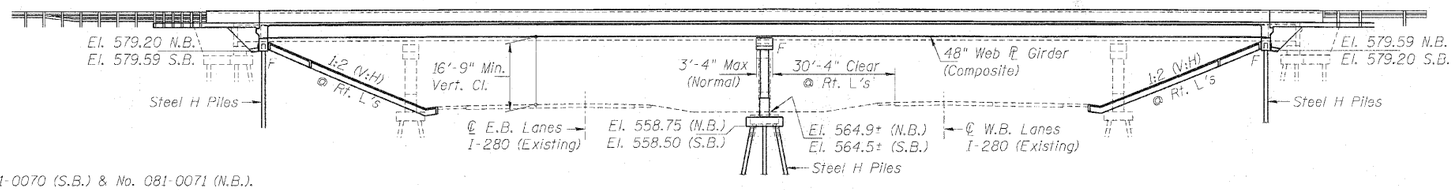

ELEVATION

Existing Structures: No. 081-0070 (S.B.) & No. 081-0071 (N.B.).
Built as F.A.I. 280, Section 81-1-HB at Sta. 105+00.00 in 1963.
R.C. deck replacement and repairs in 1988. Beam repair due to vehicle impact in 2000.
Superstructure consists of a 2 Span Plate Girder and 2 Spans Wide Flange with Plate Girder Fascias measuring 47'-8" out to out of deck and 300'-6" back to back of abutments. Substructure consists of cast-in-place reinforced concrete units. Abutments are supported on concrete piles, piers supported on timber piles.

Traffic shall be maintained at all times utilizing stage construction.

Signs attached to bridges shall be salvaged and re-used.
See Roadway MOT plans.

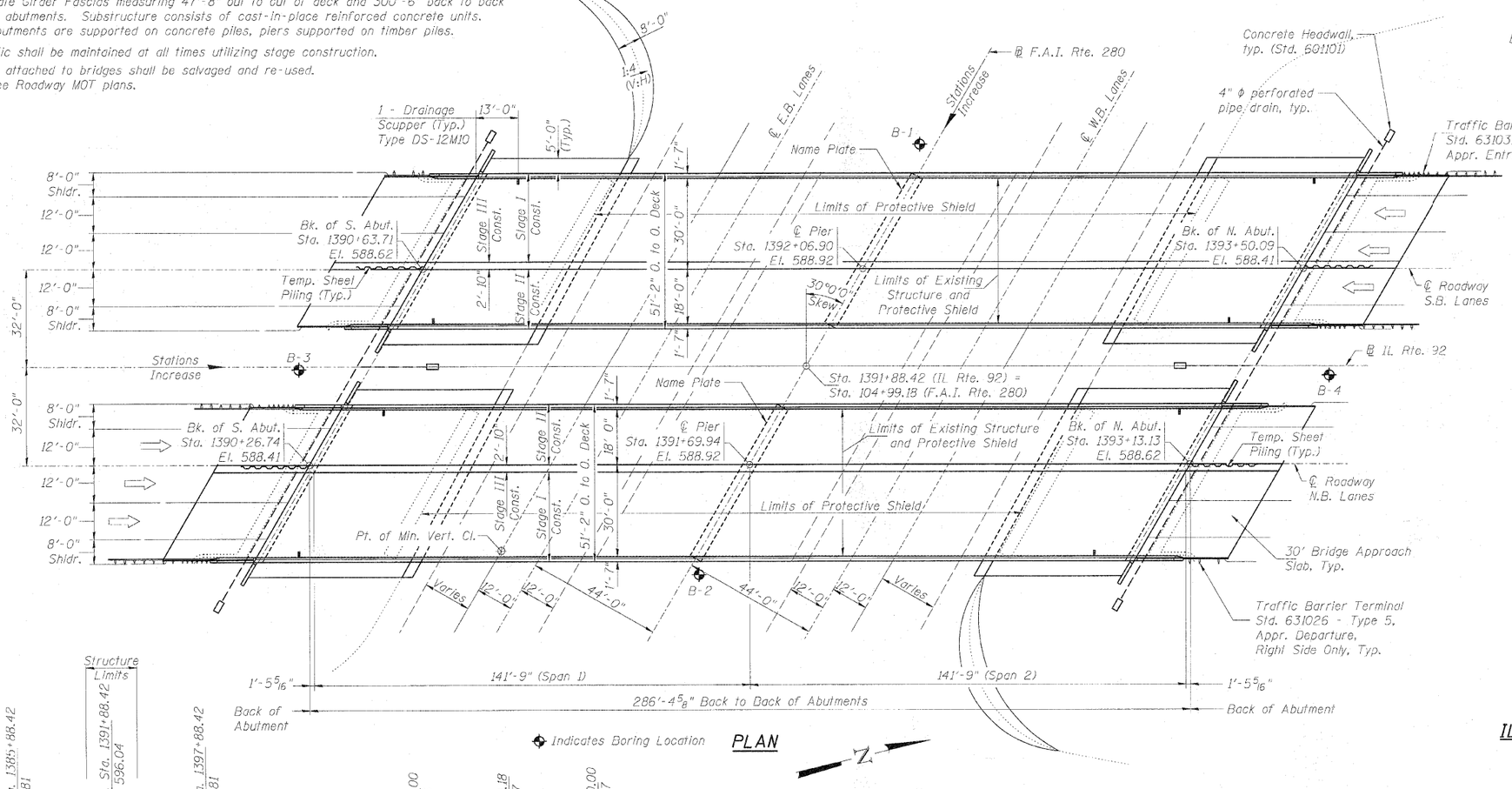

◆ Indicates Boring Location

PLAN

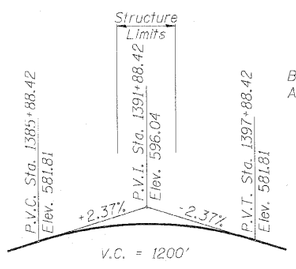

PROFILE GRADE

IL Route 92 - Along ℄ N.B. & S.B. Lanes

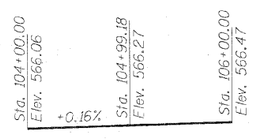

PROFILE GRADE

Existing F.A.I. Route 280 - Along ℄ E.B. & W.B. Lanes

DESIGN SPECIFICATIONS

2002 AASHTO Standard Specifications for Highway Bridges, 17th Edition

DESIGN STRESSES

FIELD UNITS

f'c = 3,500 psi
fy = 60,000 psi (Reinforcement)
fy = 50,000 psi (Struct. Steel) (M270 Grade 50)
fy = 36,000 psi (Struct. Steel) (M270 Grade 36)

LOADING HS20-44

Allow 50#/sq. ft. for future wearing surface.

SEISMIC DATA

Seismic Performance Category (SPC) = A
Bedrock Acceleration Coefficient (A) = 0.034
Site Coefficient (S) = 1.0

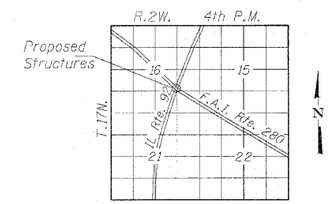

LOCATION SKETCH

FRANCIS L. NAUMAN
081-004900
STATE OF ILLINOIS
LICENSED STRUCTURAL ENGINEER

DATE SIGNED 7/21/2010
LIC. EXP. DATE : 11/30/2010

APPROVED
FOR STRUCTURAL ADEQUACY ONLY
Ralph E. Anderson (TDD)
ENGINEER OF BRIDGES AND STRUCTURES

GENERAL PLAN
IL ROUTE 92 OVER F.A.I. ROUTE 280
F.A.I. 280 SECTION 81-1(HB)R
ROCK ISLAND COUNTY
STA. 104+99.18
STRUCTURE NUMBERS 081-0188 (S.B.) & 081-0189 (N.B.)

PROFESSIONAL DESIGN FIRM LICENSE #184-001084

HANSON
Hanson Professional Services Inc.

JOB NO. 05R1532A
DATE 07/23/10
SHEET NO. 1
50 SHEETS

F.A.I. RTE.	SECTION	COUNTY	TOTAL SHEETS	SHEET NO.
280	81-1(HB)R	Rock Island	503	134

CONTRACT NO. 64815
ILLINOIS | FED. AID PROJECT

07/22/2010
c:\pwidot_wrk\vda_rsd_deleted\ed3638\P0280-6486-00_GP&E.dgn

LAYOUT	JKS/FLN	06/05/10
DRAWN	MGM/JDM	07/21/10
REVIEWED	JKS/FLN	07/21/10

INDEX OF SHEETS

STATION 104+62.23
BUILT 201_ BY
STATE OF ILLINOIS
F.A.I. 280 SEC. 81-1(HB)R
LOADING HS20
STR. NO. 081-0188

NAME PLATE

See Std. 515001
Locate Name Plate on Pier as indicated on Sheet 42 of 50.

STATION 105+36.13
BUILT 201_ BY
STATE OF ILLINOIS
F.A.I. 280 SEC. 81-1(HB)R
LOADING HS20
STR. NO. 081-0189

NAME PLATE

See Std. 515001
Locate Name Plate on Pier as indicated on Sheet 40 of 50.

TOTAL BILL OF MATERIAL

ITEM	UNIT	SUPER	SUB	TOTAL
Porous Granular Embankment, Special	Cu. Yd.	——	520	520
Removal of Existing Structures No. 3	Each	2	——	2
Protective Shield	Sq. Yd.	2078	——	2078
Structure Excavation	Cu. Yd.	——	499	499
Concrete Structures	Cu. Yd.	——	451.0	451.0
Concrete Superstructure	Cu. Yd.	1022.0	324.8	1346.8
Bridge Deck Grooving	Sq. Yd.	3547	——	3547
Concrete Encasement	Cu. Yd.	——	10.0	10.0
Protective Coat	Sq. Yd.	4367	——	4367
Stud Shear Connectors	Each	8568	——	8568
Reinforcement Bars, Epoxy Coated	Pound	276,640	80,130	356,770
Bar Splicers	Each	3752	362	4114
Slope Wall 4 Inch	Sq. Yd.	——	1394	1394
Furnishing Steel Piles HP 12x53	Foot	——	4496	4496
Driving Piles	Foot	——	4496	4496
Test Pile Steel HP 12x53	Each	——	6	6
Temporary Sheet Piling	Sq. Ft.	——	2700	2700
Name Plates	Each	2	——	2
Anchor Bolts 1"	Each	——	56	56
Anchor Bolts 1½"	Each	——	28	28
Geocomposite Wall Drain	Sq. Yd.	——	270	270
Pipe Underdrains for Structures 4"	Foot	——	440	440
Drainage Scuppers, DS-12M10	Each	8	——	8
Furnishing and Erecting Structural Steel Bridge No. 6	L. Sum	1	——	1
Instrumented Piles	L. Sum	——	1	1

GENERAL NOTES

1. Fasteners shall be AASHTO M164 Type 1, mechanically galvanized bolts. Bolts $\frac{7}{8}$ in. ϕ. holes $\frac{15}{16}$ in. ϕ. unless otherwise noted.
2. Calculated weight of Structural Steel = 638,000 lbs (AASHTO M270 Grade 50) (NB)
   5,790 lbs (AASHTO M270 Grade 36) (NB)
   638,000 lbs (AASHTO M270 Grade 50) (SB)
   5,790 lbs (AASHTO M270 Grade 36) (SB)
3. No field welding is permitted except as specified in the contract documents.
4. Reinforcement bars shall conform to the requirements of ASTM A 706 Gr 60. See Special Provisions.
5. Reinforcement bars designated (E) shall be epoxy coated.
6. If the Contractor elects to use cantilever forming brackets on the exterior beams or girders, the brackets shall be placed at the same locations as required for the hardwood blocks in Article 503.06(b) of the Standard Specifications. If additional cantilever forming brackets are required, hardwood blocking shall be wedged between the exterior and first interior beam at each of these additional bracket locations.
7. Bearing seat surfaces shall be constructed or adjusted to the designated elevations within a tolerance of $\frac{1}{8}$ inch (0.01 ft.). Adjustment shall be made either by grinding the surface or by shimming the bearings.
8. The existing structural steel coating contains lead. The Contractor shall take appropriate precautions to deal with the presence of lead on this project.
9. **The Organic Zinc Rich Primer / Epoxy / Urethane Paint System shall be used for painting of new structural steel except where otherwise noted. The entire system shall be shop applied, with the exception of the exterior surfaces and the bottom of the bottom flange of fascia beams, masked off connection surfaces, field installed fasteners and damaged areas shall be touched up and finish coated in the field. The color of the final finish coat for all interior steel surfaces shall be Gray, Munsell No. 5B 7/1. The color of the final finish coat for the exterior and the bottom of the bottom flange of fascia beams shall be Blue, Munsell No. 10B 3/6. See Special Provision for "Cleaning and Painting New Metal Structures."**
10. The maximum pay length of Protective Shield shall extend from the inside face of Pier 1 and Pier 4 (northernmost piers) to the inside face of Pier 3 and Pier 6 (southernmost piers) for each of the existing northbound and southbound bridges. The maximum pay width of Protective Shield shall be equal to the overall deck width of each of the existing northbound and southbound bridges.
11. During Stage I removal, the existing abutments shall be removed to within 12 inches of the Profile Grade Line. The removal of the existing abutments shall be parallel to the Profile Grade Line.
12. During Stage I removal, the existing piers shall be removed to within 6 inches of the Profile Grade Line. The removal of the existing piers shall be parallel to the Profile Grade Line.
13. The existing timber piles supporting the existing bridge approach pavements shall be cut off at least 24 inches below the bottom of the new bridge approach slab and footing.

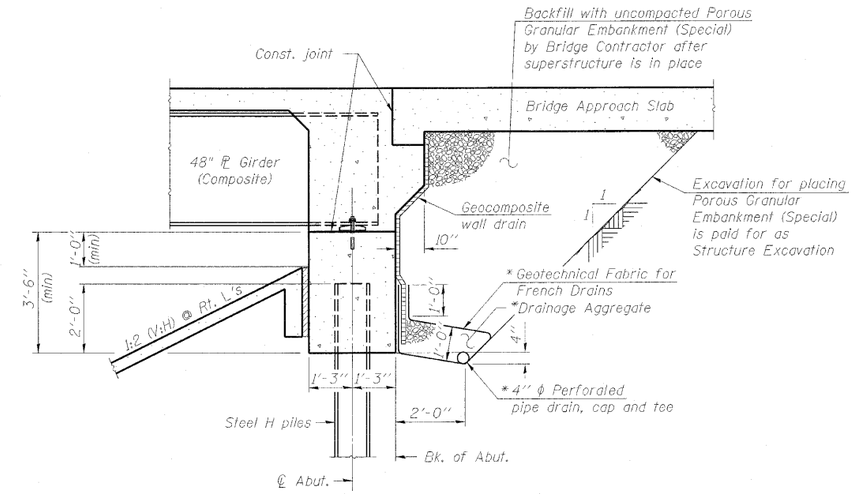

SECTION THRU INTEGRAL ABUTMENT

(Horiz. dim. @ Rt. L's)

* Included in the cost of Pipe Underdrains for Structures.

Note:
All drainage system components shall extend to 2'-0" from the end of each wingwall except an outlet pipe shall extend until intersection with the side slopes. The pipes shall drain into concrete headwalls. (See Article 601.05 of the Standard Specifications and Highway Standard 601101).

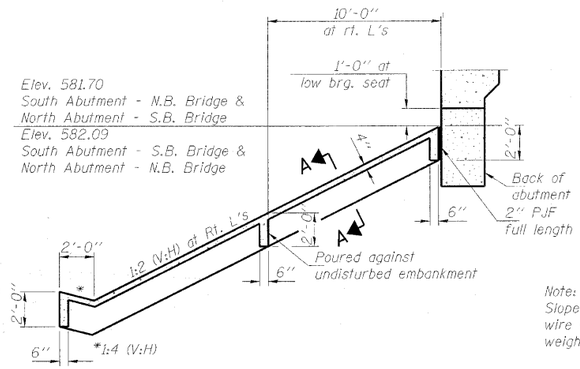

SECTION THRU CONCRETE SLOPEWALL

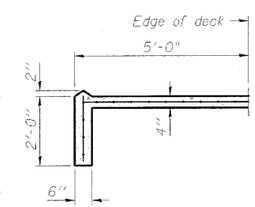

SECTION A-A

Note:
Slope wall shall be reinforced with welded wire fabric, 6 in. x 6 in. - W4.0 x W4.0, weighing 58 lbs. per 100 sq. ft.

GENERAL DATA

STRUCTURE NUMBERS 081-0188 (S.B.) & 081-0189 (N.B.)

PROFESSIONAL DESIGN FIRM LICENSE #184-001084

HANSON
Hanson Professional Services Inc.

JOB NO.	SHEET NO.	F.A.I. RTE.	SECTION	COUNTY	TOTAL SHEETS	SHEET NO.
05R1532A	SHEET NO. 2	280	81-1(HB)R	Rock Island	503	135
DATE 05/21/10	50 SHEETS			CONTRACT NO. 64815		
			ILLINOIS	FED. AID PROJECT		

LAYOUT	JRB/KLN	04/05/10
DRAWN	MCW/JDM	07/21/10
REVIEWED	JRB/KLN	07/21/10

09/29/2009
c:\pwworking\d0392\d0392d0189\64815-002-gen01.dgn

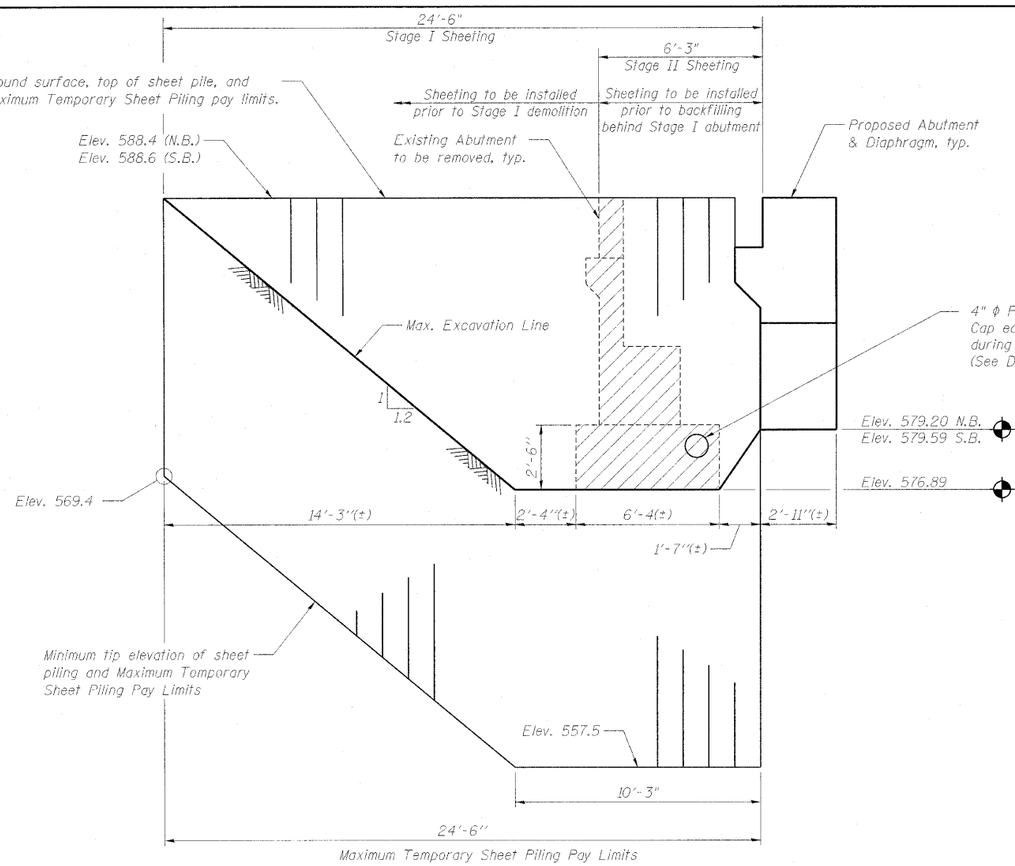

TEMPORARY SHEET PILING AT SOUTH ABUTMENTS

Minimum Section Modulus of Temporary Sheet Piling = 27.1 $in^3/ft.$
All Dimensions given parallel to centerline of roadway

If the Contractor chooses to alter the temporary cantilevered sheet piling design requirements shown on the plan, a design submittal including plan details and calculation will be required for review an acceptance by the Engineer.

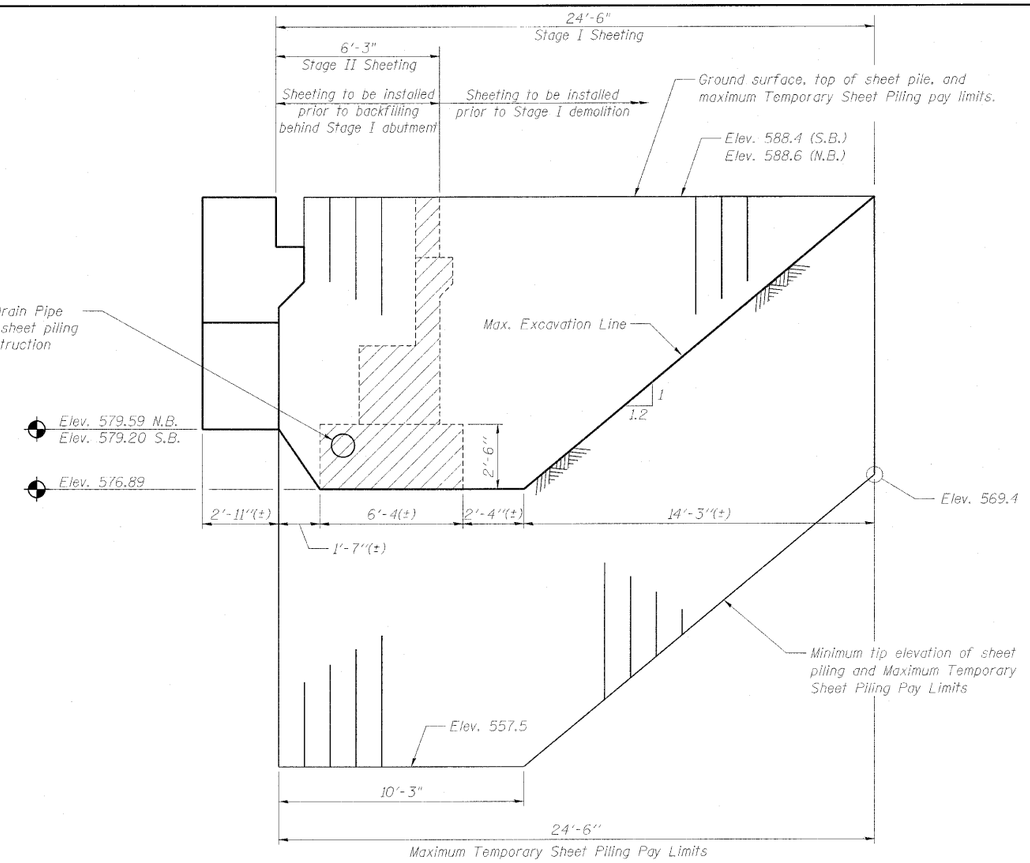

TEMPORARY SHEET PILING AT NORTH ABUTMENTS

Minimum Section Modulus of Temporary Sheet Piling = 27.1 $in^3/ft.$
All Dimensions given parallel to centerline of roadway

If the Contractor chooses to alter the temporary cantilevered sheet piling design requirements shown on the plan, a design submittal including plan details and calculation will be required for review an acceptance by the Engineer.

Note:
Maximum Pay Limits for Porous Granular Embankment, Special and Structural Excavation are shown on Sheet 2 of 50.

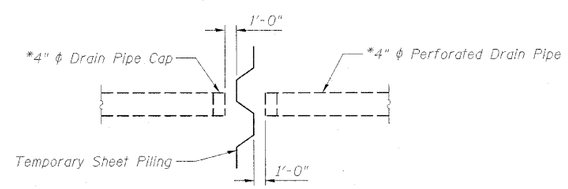

DRAIN PIPE DETAIL AT SHEET PILING

*Included in the cost of Pipe Underdrains for Structures.

TEMPORARY SHEET PILING
STRUCTURE NUMBERS 081-0188 (S.B.) & 081-0189 (N.B.)

PROFESSIONAL DESIGN FIRM LICENSE #184-001084

HANSON
Hanson Professional Services Inc.

JOB NO.	SHEET NO.	F.A.I. RTE.	SECTION	COUNTY	TOTAL SHEETS	SHEET NO.
05R1532A	3	280	81-1(HB)R	Rock Island	503	136
DATE 05/21/10	50 SHEETS			CONTRACT NO. 64815		
				ILLINOIS FED. AID PROJECT		

LAYOUT	JKR/FLN	04/05/10
DRAWN	NGM/BDM	07/21/10
REVIEWED	JKR/FLN	07/21/10

09.3PL200
c:\pwidot\projects\d0_not_delete\tmp\5692\D5D585 64815-003-Temp_SH_Piling.dgn

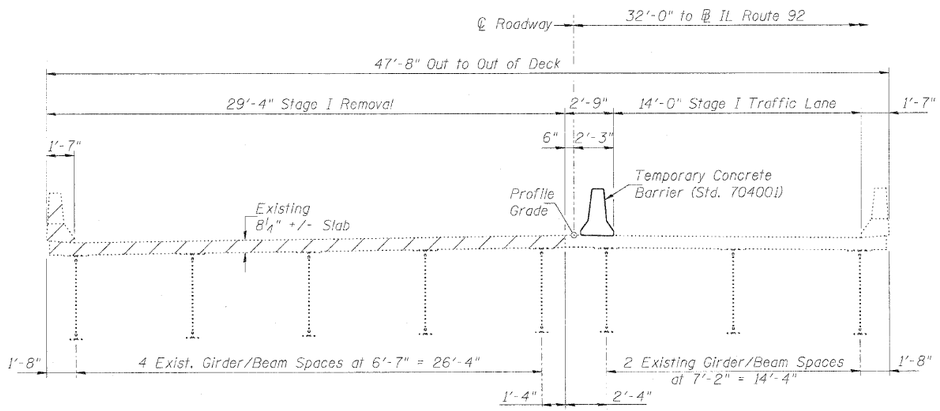

STAGE I REMOVAL

Looking South at North Bound Lanes
Looking North at South Bound Lanes

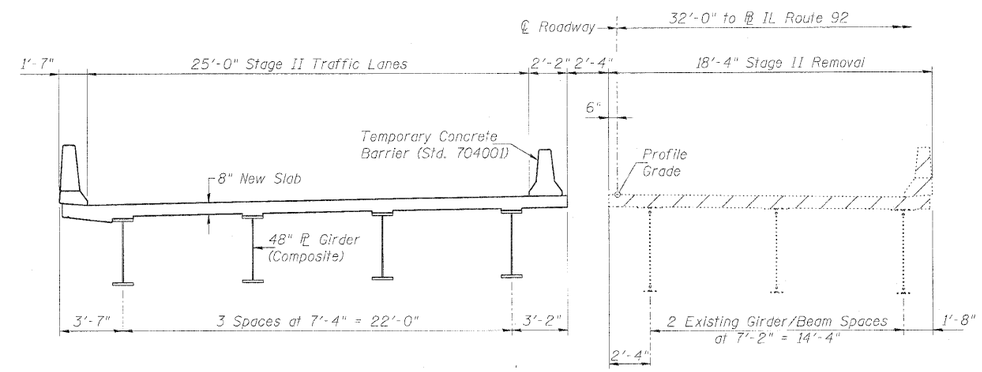

STAGE II REMOVAL

Looking South at North Bound Lanes
Looking North at South Bound Lanes

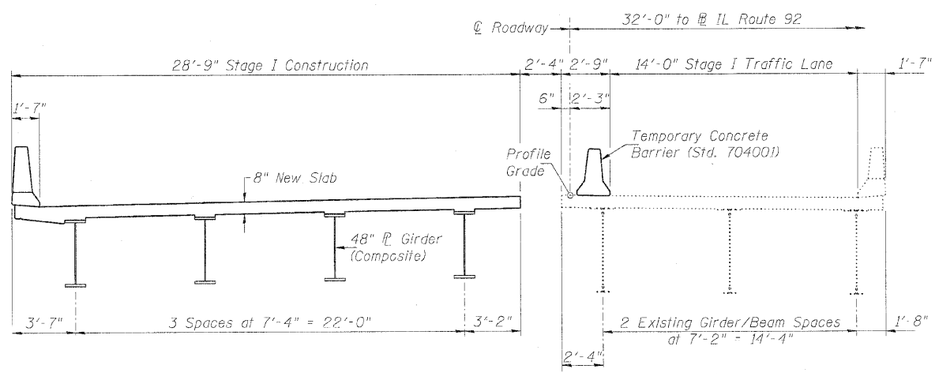

STAGE I CONSTRUCTION

Looking South at North Bound Lanes
Looking North at South Bound Lanes

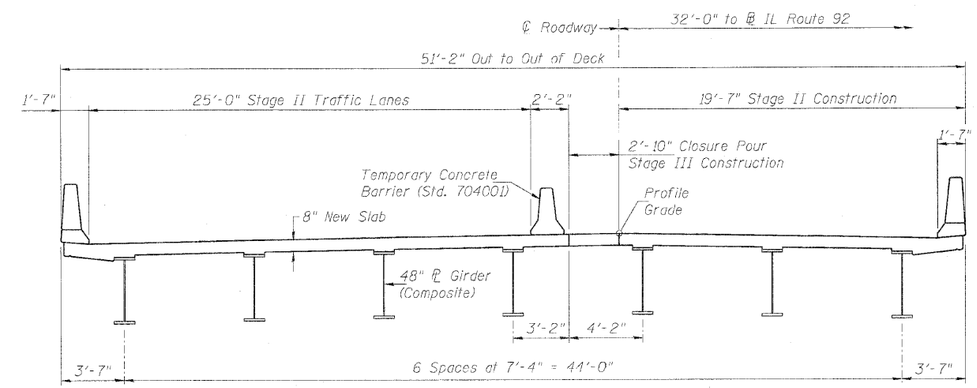

STAGES II & III CONSTRUCTION

Looking South at North Bound Lanes
Looking North at South Bound Lanes

Note:
Limits of Stage removal for the substructure are identified in General Note 11 and 12 on Sheet 2 of 50.

STAGE CONSTRUCTION DETAILS
STRUCTURE NUMBERS 081-0188 (S.B.) & 081-0189 (N.B.)

PROFESSIONAL DESIGN FIRM LICENSE #184-001084

HANSON
Hanson Professional Services Inc.

JOB NO.	SHEET NO. 4	F.A.I. RTE.	SECTION	COUNTY	TOTAL SHEETS	SHEET NO.
05R1532A	50 SHEETS	280	81-1(HB)R	Rock Island	503	137
DATE 07/23/10		CONTRACT NO. 64815				
		ILLINOIS FED. AID PROJECT				

LAYOUT	KRJ/FLN	04/05/10
DRAWN	MGM/DM	07/21/10
REVIEWED	KRJ/FLN	07/21/10

07/23/2010
c:\pwidas.work\do_not_delete\dms13532\D0205B-E-081-5-004-Stage_Const.dgn

When "A" is 3'-6" or less, the temporary concrete barrier shall be anchored to the new slab according to Detail I or Detail II. No anchorage is required when "A" is greater than 3'-6".

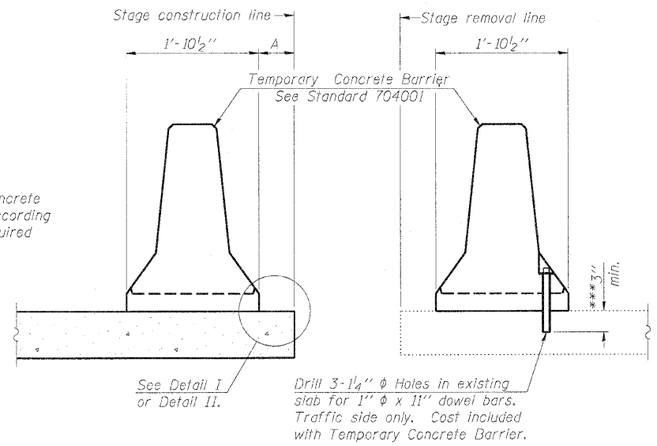

SECTIONS THRU SLAB

NOTES

Detail I - With Bar Splicer or Couplers:
Connect one (1) 1"x7"x11½" steel ℙ to the top layer of couplers with 2-⅝" ϕ bolts screwed to coupler at approximate ℄ of each barrier panel.

Detail II - With Extended Reinforcement Bars:
Connect one (1) 1"x7"x 11½" steel ℙ to the concrete slab or concrete wearing surface with 2-⅝" ϕ Expansion Anchors or cast in place inserts spaced between the top layer of reinforcement at approximate ℄ of each barrier panel.

Cost of anchorage is included with Temporary Concrete Barrier.

The 1" x 7" x 11½" plate shall not be removed until stage III construction forms and all reinforcement bars are in place and the concrete is ready to be placed.

*** Dimension shown is minimum required embedment into concrete. If hot-mix asphalt wearing surface is present, minimum embedment shall be in addition to wearing surface depth.

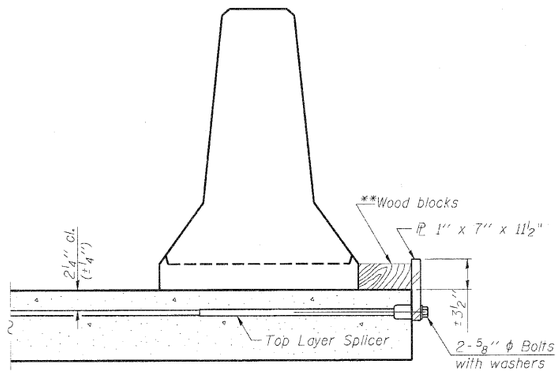

DETAIL I

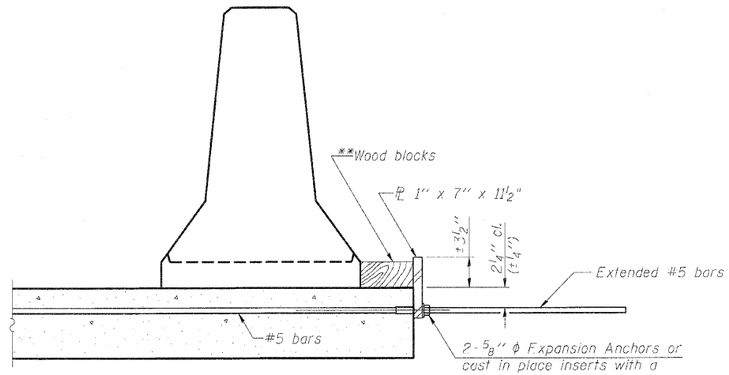

DETAIL II

** Wood blocks may be omitted when required to provide minimum stage traffic lane width. When the wood blocks are omitted, the concrete barrier shall be in direct contact with the steel retainer plate.

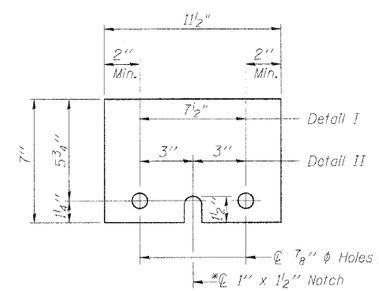

STEEL RETAINER ℙ 1" x 7" x 11½"

* Required only with Detail II

TEMPORARY CONCRETE BARRIER FOR STAGE CONSTRUCTION
STRUCTURE NUMBERS 081-0188 (S.B.) & 081-0189 (N.B.)

PROFFSSIONAL DESIGN FIRM LICENSE #184-001084

HANSON
Hanson Professional Services Inc.

JOB NO.	SHEET NO. 5	F.A.I. RTE.	SECTION	COUNTY	TOTAL SHEETS	SHEET NO.
05R1532A		280	81-1(HB)R	Rock Island	503	138
DATE 07/23/10	50 SHEETS			CONTRACT NO. 64815		
			ILLINOIS FED. AID PROJECT			

LAYOUT	KRJ/FLN	04/05/10
DRAWN	MGM/JDM	07/21/10
REVIEWED	KRJ/FLN	07/21/10

07/23/2010
c:\pwise_work\dot_rsi_data\sheet3692\081-0188-6-B15-005-TempConcBar.dgn

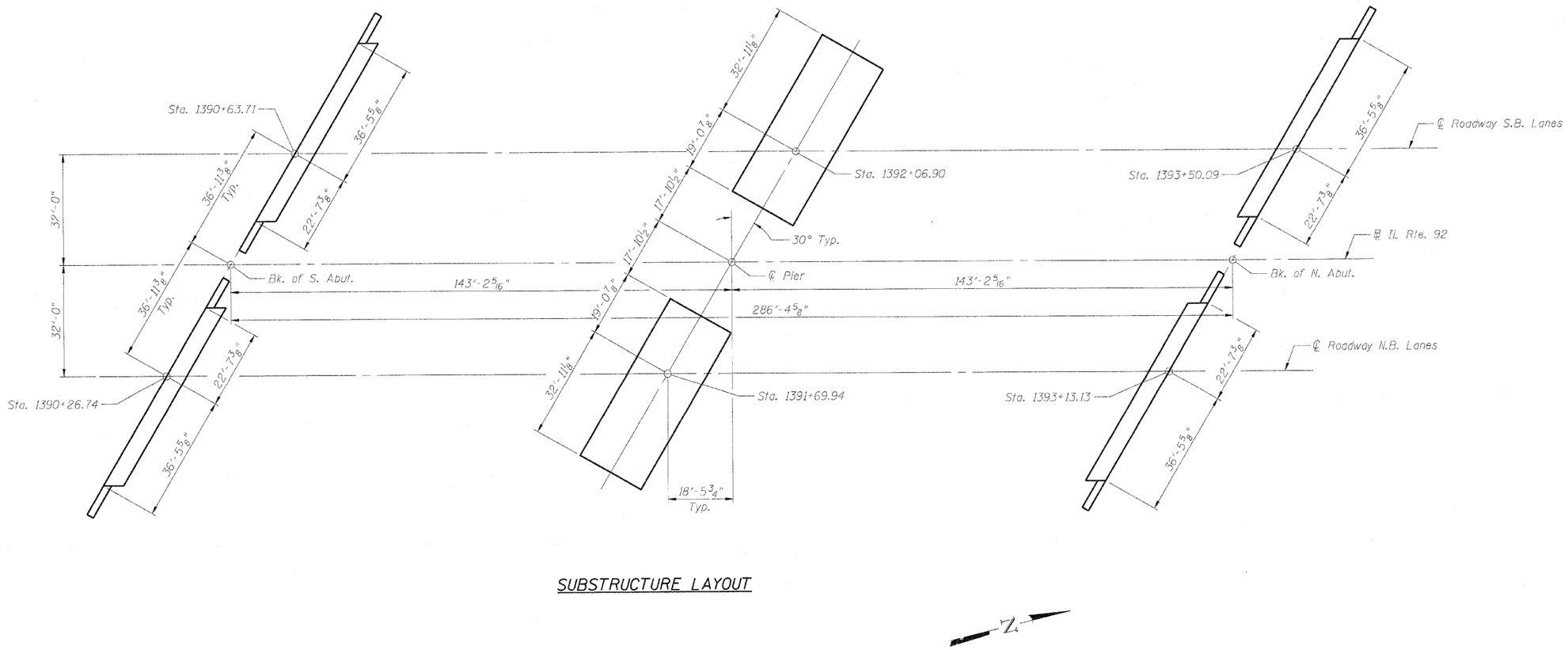

SUBSTRUCTURE LAYOUT

SUBSTRUCTURE LAYOUT
STRUCTURE NUMBERS 081-0188 (S.B.) & 081-0189 (N.B.)

PROFESSIONAL DESIGN FIRM LICENSE #184-001084

HANSON
Hanson Professional Services Inc.

JOB NO.	SHEET NO. 6
05R1532A	50 SHEETS
DATE 07/23/10	

F.A.I. RTE.	SECTION	COUNTY	TOTAL SHEETS	SHEET NO.
280	81-1(HB)R	Rock Island	503	139
		CONTRACT NO. 64815		
	ILLINOIS	FED. AID PROJECT		

LAYOUT	KR/FLN	04/05/10
DRAWN	MDM/BDM	07/21/10
REVIEWED	KR/FLN	07/21/10

07/23/2010
c:\pwidos_work\dot_rdi_joints\dist1592\C80\D168-64815-006 Sub_Layout.dgn

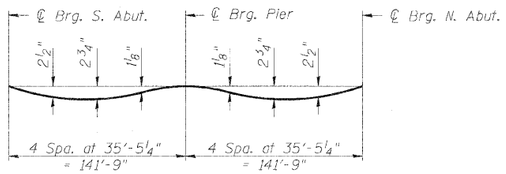

GIRDER DEAD LOAD DEFLECTION DIAGRAM

(Includes weight of concrete only.)

Note:
The above deflections are not to be used in the field if the engineer is working from the grade elevations adjusted for dead load deflections as shown on Sheets 8 thru 12 of 50.

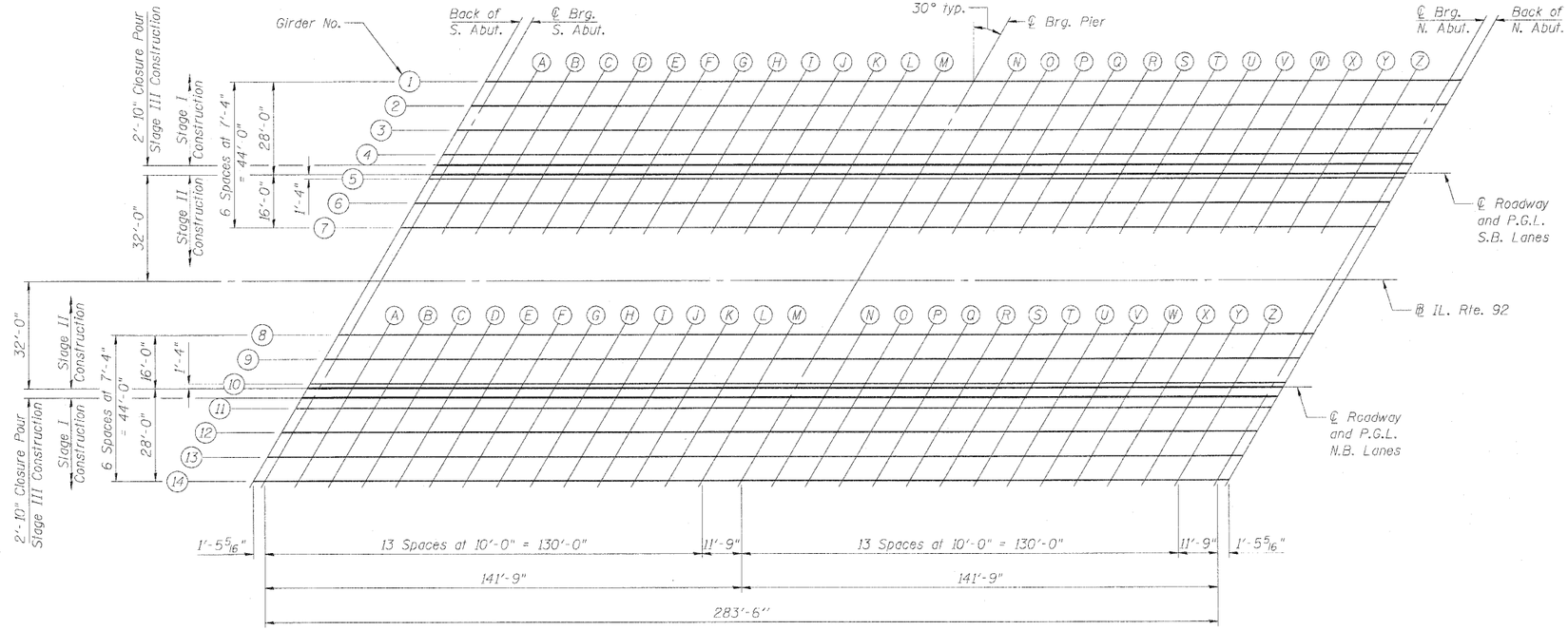

DIAGRAMMATIC PLAN

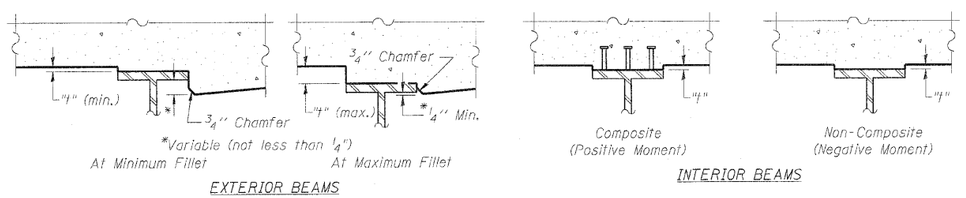

EXTERIOR BEAMS

INTERIOR BEAMS

To determine "t": After all structural steel has been erected, elevations of the top flanges of the beams shall be taken at intervals shown above. These elevations subtracted from the "Theoretical Grade Elevations Adjusted for Dead Load Deflection" shown on Sheets 8 thru 12 of 50, minus 8" slab thickness, equals the fillet heights "t" above top flange of beams.

FILLET HEIGHTS

Notes:
Offsets are to ℄ IL. Rte. 92.

Negative (-) offsets are offsets to the left of the ℄ while looking upstation.

TOP OF SLAB ELEVATIONS

STRUCTURE NUMBERS 081-0188 (S.B.) & 081-0189 (N.B.)

PROFESSIONAL DESIGN FIRM LICENSE #184-001084

HANSON
Hanson Professional Services Inc.

JOB NO.	SHEET NO.	F.A.I. RTE.	SECTION	COUNTY	TOTAL SHEETS	SHEET NO.
05R1532A	7	280	81-1(HB)R	Rock Island	503	140
DATE 07/23/10	50 SHEETS	CONTRACT NO. 64815				
		ILLINOIS FED. AID PROJECT				

07/22/2010
c:\pwtess\ucprf\cts_rsd_deleleiwu\365P0B0B-E4B5-007-T05_Jef.dgn

LAYOUT	KRV/F.N.	04/05/10
DRAWN	MCM/JDM	07/21/10
REVIEWED	KRV/F.N.	07/21/10

GIRDER 1

Location	Station	Offset	Theoretical Grade Elevations	Theo. Grade Elevations Adj. for D.L. Deflection
Bk. S. Abut.	1390+79.88	-60.00	588.18	588.18
CL Brg. S. Abut.	1390+81.32	-60.00	588.18	588.18
A	1390+91.32	-60.00	588.22	588.29
B	1391+01.32	-60.00	588.26	588.39
C	1391+11.32	-60.00	588.29	588.48
D	1391+21.32	-60.00	588.32	588.54
E	1391+31.32	-60.00	588.34	588.59
F	1391+41.32	-60.00	588.37	588.61
G	1391+51.32	-60.00	588.38	588.61
H	1391+61.32	-60.00	588.39	588.60
I	1391+71.32	-60.00	588.40	588.57
J	1391+81.32	-60.00	588.41	588.53
K	1391+91.32	-60.00	588.41	588.49
L	1392+01.32	-60.00	588.41	588.45
M	1392+11.32	-60.00	588.40	588.41
CL Brg. Pier	1392+23.07	-60.00	588.39	588.39
N	1392+33.07	-60.00	588.37	588.38
O	1392+43.07	-60.00	588.35	588.39
P	1392+53.07	-60.00	588.33	588.40
Q	1392+63.07	-60.00	588.30	588.41
R	1392+73.07	-60.00	588.27	588.42
S	1392+83.07	-60.00	588.23	588.43
T	1392+93.07	-60.00	588.19	588.42
U	1393+03.07	-60.00	588.15	588.39
V	1393+13.07	-60.00	588.10	588.35
W	1393+23.07	-60.00	588.05	588.28
X	1393+33.07	-60.00	588.00	588.19
Y	1393+43.07	-60.00	587.94	588.08
Z	1393+53.07	-60.00	587.87	587.96
CL Brg. N. Abut.	1393+64.82	-60.00	587.79	587.79
Bk. N. Abut.	1393+66.26	-60.00	587.78	587.78

GIRDER 2

Location	Station	Offset	Theoretical Grade Elevations	Theo. Grade Elevations Adj. for D.L. Deflection
Bk. S. Abut.	1390+75.64	-52.67	588.31	588.31
CL Brg. S. Abut.	1390+77.09	-52.67	588.32	588.32
A	1390+87.09	-52.67	588.36	588.43
B	1390+97.09	-52.67	588.40	588.53
C	1391+07.09	-52.67	588.43	588.62
D	1391+17.09	-52.67	588.46	588.69
E	1391+27.09	-52.67	588.49	588.73
F	1391+37.09	-52.67	588.51	588.76
G	1391+47.09	-52.67	588.53	588.76
H	1391+57.09	-52.67	588.54	588.74
I	1391+67.09	-52.67	588.55	588.72
J	1391+77.09	-52.67	588.56	588.68
K	1391+87.09	-52.67	588.56	588.64
L	1391+97.09	-52.67	588.56	588.60
M	1392+07.09	-52.67	588.56	588.57
CL Brg. Pier	1392+18.84	-52.67	588.54	588.54
N	1392+28.84	-52.67	588.53	588.54
O	1392+38.84	-52.67	588.51	588.55
P	1392+48.84	-52.67	588.49	588.56
Q	1392+58.84	-52.67	588.46	588.58
R	1392+68.84	-52.67	588.43	588.59
S	1392+78.84	-52.67	588.40	588.60
T	1392+88.84	-52.67	588.36	588.59
U	1392+98.84	-52.67	588.32	588.57
V	1393+08.84	-52.67	588.28	588.52
W	1393+18.84	-52.67	588.23	588.46
X	1393+28.84	-52.67	588.17	588.37
Y	1393+38.84	-52.67	588.12	588.26
Z	1393+48.84	-52.67	588.05	588.14
CL Brg. N. Abut.	1393+60.59	-52.67	587.98	587.98
Bk. N. Abut.	1393+62.03	-52.67	587.97	587.97

GIRDER 3

Location	Station	Offset	Theoretical Grade Elevations	Theo. Grade Elevations Adj. for D.L. Deflection
Bk. S. Abut.	1390+71.41	-45.33	588.44	588.44
CL Brg. S. Abut.	1390+72.85	-45.33	588.45	588.45
A	1390+82.85	-45.33	588.49	588.56
B	1390+92.85	-45.33	588.53	588.67
C	1391+02.85	-45.33	588.57	588.76
D	1391+12.85	-45.33	588.60	588.83
E	1391+22.85	-45.33	588.63	588.87
F	1391+32.85	-45.33	588.65	588.90
G	1391+42.85	-45.33	588.67	588.91
H	1391+52.85	-45.33	588.69	588.89
I	1391+62.85	-45.33	588.70	588.86
J	1391+72.85	-45.33	588.71	588.83
K	1391+82.85	-45.33	588.71	588.79
L	1391+92.85	-45.33	588.71	588.75
M	1392+02.85	-45.33	588.71	588.72
CL Brg. Pier	1392+14.60	-45.33	588.70	588.70
N	1392+24.60	-45.33	588.69	588.70
O	1392+34.60	-45.33	588.67	588.71
P	1392+44.60	-45.33	588.65	588.72
Q	1392+54.60	-45.33	588.63	588.74
R	1392+64.60	-45.33	588.60	588.76
S	1392+74.60	-45.33	588.57	588.76
T	1392+84.60	-45.33	588.53	588.76
U	1392+94.60	-45.33	588.49	588.74
V	1393+04.60	-45.33	588.45	588.69
W	1393+14.60	-45.33	588.40	588.63
X	1393+24.60	-45.33	588.35	588.54
Y	1393+34.60	-45.33	588.29	588.44
Z	1393+44.60	-45.33	588.23	588.32
CL Brg. N. Abut.	1393+56.35	-45.33	588.16	588.16
Bk. N. Abut.	1393+57.79	-45.33	588.15	588.15

GIRDER 4

Location	Station	Offset	Theoretical Grade Elevations	Theo. Grade Elevations Adj. for D.L. Deflection
Bk. S. Abut.	1390+67.17	-38.00	588.55	588.55
CL Brg. S. Abut.	1390+68.62	-38.00	588.55	588.55
A	1390+78.62	-38.00	588.60	588.67
B	1390+88.62	-38.00	588.64	588.77
C	1390+98.62	-38.00	588.68	588.86
D	1391+08.62	-38.00	588.71	588.93
E	1391+18.62	-38.00	588.74	588.98
F	1391+28.62	-38.00	588.77	589.01
G	1391+38.62	-38.00	588.79	589.02
H	1391+48.62	-38.00	588.80	589.01
I	1391+58.62	-38.00	588.82	588.98
J	1391+68.62	-38.00	588.83	588.95
K	1391+78.62	-38.00	588.83	588.91
L	1391+88.62	-38.00	588.84	588.88
M	1391+98.62	-38.00	588.83	588.85
CL Brg. Pier	1392+10.37	-38.00	588.83	588.83
N	1392+20.37	-38.00	588.82	588.83
O	1392+30.37	-38.00	588.80	588.84
P	1392+40.37	-38.00	588.78	588.85
Q	1392+50.37	-38.00	588.76	588.87
R	1392+60.37	-38.00	588.73	588.89
S	1392+70.37	-38.00	588.70	588.90
T	1392+80.37	-38.00	588.67	588.90
U	1392+90.37	-38.00	588.63	588.88
V	1393+00.37	-38.00	588.59	588.83
W	1393+10.37	-38.00	588.54	588.77
X	1393+20.37	-38.00	588.49	588.69
Y	1393+30.37	-38.00	588.44	588.58
Z	1393+40.37	-38.00	588.38	588.46
CL Brg. N. Abut.	1393+52.12	-38.00	588.31	588.31
Bk. N. Abut.	1393+53.56	-38.00	588.30	588.30

TOP OF SLAB ELEVATIONS

STRUCTURE NUMBERS 081-0188 (S.B.) & 081-0189 (N.B.)

PROFESSIONAL DESIGN FIRM LICENSE #184-001084

HANSON
Hanson Professional Services Inc.

JOB NO.	SHEET NO. 8	F.A.I. RTE.	SECTION	COUNTY	TOTAL SHEETS	SHEET NO.
05R1532A		280	81-1(HB)R	Rock Island	503	141
DATE 07/23/10	50 SHEETS	CONTRACT NO. 64815				
		ILLINOIS	FED. AID PROJECT			

LAYOUT	JKV/FLN	01/05/10
DRAWN	NGW/JDM	01/27/10
REVIEWED	JKV/FLN	01/27/10

07/23/2010
d:\pwidot\workfdb_dot_dist\projects\5692\082088-64815-008TOS_2sht1.dgn

SB STAGE I CONSTRUCTION JOINT

Location	Station	Offset	Theoretical Grade Elevations	Theo. Grade Elevations Adj. for D.L. Deflection
Bk. S. Abut.	1390+65.35	-34.83	588.59	588.59
CL Brg. S. Abut.	1390+66.79	-34.83	588.59	588.59
A	1390+76.79	-34.83	588.64	588.71
B	1390+86.79	-34.83	588.68	588.82
C	1390+96.79	-34.83	588.72	588.91
D	1391+06.79	-34.83	588.75	588.98
E	1391+16.79	-34.83	588.78	589.03
F	1391+26.79	-34.83	588.81	589.06
G	1391+36.79	-34.83	588.83	589.06
H	1391+46.79	-34.83	588.85	589.05
I	1391+56.79	-34.83	588.87	589.03
J	1391+66.79	-34.83	588.88	589.00
K	1391+76.79	-34.83	588.88	588.96
L	1391+86.79	-34.83	588.89	588.93
M	1391+96.79	-34.83	588.88	588.90
CL Brg. Pier	1392+08.54	-34.83	588.88	588.88
N	1392+18.54	-34.83	588.87	588.88
O	1392+28.54	-34.83	588.85	588.89
P	1392+38.54	-34.83	588.84	588.91
Q	1392+48.54	-34.83	588.81	588.93
R	1392+58.54	34.83	588.79	588.94
S	1392+68.54	-34.83	588.76	588.95
T	1392+78.54	-34.83	588.73	588.95
U	1392+88.54	-34.83	588.69	588.93
V	1392+98.54	-34.83	588.65	588.89
W	1393+08.54	-34.83	588.60	588.83
X	1393+18.54	-34.83	588.55	588.75
Y	1393+28.54	-34.83	588.50	588.64
Z	1393+38.54	-34.83	588.44	588.52
CL Brg. N. Abut.	1393+50.29	-34.83	588.37	588.37
Bk. N. Abut.	1393+51.73	-34.83	588.36	588.36

S.B. CENTERLINE ROADWAY, P.G.L. & STAGE II CONSTRUCTION JOINT

Location	Station	Offset	Theoretical Grade Elevations	Theo. Grade Elevations Adj. for D.L. Deflection
Bk. S. Abut.	1390+63.71	-32.00	588.62	588.62
CL Brg. S. Abut.	1390+65.15	-32.00	588.63	588.63
A	1390+75.15	-32.00	588.68	588.75
B	1390+85.15	-32.00	588.72	588.85
C	1390+95.15	-32.00	588.76	588.94
D	1391+05.15	-32.00	588.79	589.02
E	1391+15.15	-32.00	588.82	589.07
F	1391+25.15	-32.00	588.85	589.10
G	1391+35.15	-32.00	588.87	589.11
H	1391+45.15	-32.00	588.89	589.10
I	1391+55.15	-32.00	588.91	589.07
J	1391+65.15	-32.00	588.92	589.04
K	1391+75.15	-32.00	588.93	589.00
L	1391+85.15	-32.00	588.93	588.97
M	1391+95.15	-32.00	588.93	588.94
CL Brg. Pier	1392+06.90	-32.00	588.92	588.92
N	1392+16.90	-32.00	588.91	588.92
O	1392+26.90	-32.00	588.90	588.94
P	1392+36.90	-32.00	588.88	588.95
Q	1392+46.90	-32.00	588.86	588.97
R	1392+56.90	-32.00	588.84	588.99
S	1392+66.90	-32.00	588.81	589.00
T	1392+76.90	-32.00	588.78	589.00
U	1392+86.90	-32.00	588.74	588.98
V	1392+96.90	-32.00	588.70	588.94
W	1393+06.90	-32.00	588.65	588.88
X	1393+16.90	-32.00	588.60	588.80
Y	1393+26.90	-32.00	588.55	588.70
Z	1393+36.90	-32.00	588.49	588.58
CL Brg. N. Abut.	1393+48.65	-32.00	588.42	588.42
Bk. N. Abut.	1393+50.10	-32.00	588.41	588.41

GIRDER 5

Location	Station	Offset	Theoretical Grade Elevations	Theo. Grade Elevations Adj. for D.L. Deflection
Bk. S. Abut.	1390+62.94	-30.67	588.60	588.60
CL Brg. S. Abut.	1390+64.38	-30.67	588.61	588.61
A	1390+74.38	-30.67	588.65	588.72
B	1390+84.38	-30.67	588.70	588.83
C	1390+94.38	-30.67	588.73	588.92
D	1391+04.38	-30.67	588.77	588.99
E	1391+14.38	-30.67	588.80	589.05
F	1391+24.38	-30.67	588.83	589.07
G	1391+34.38	-30.67	588.85	589.08
H	1391+44.38	-30.67	588.87	589.07
I	1391+54.38	-30.67	588.89	589.05
J	1391+64.38	-30.67	588.90	589.02
K	1391+74.38	-30.67	588.91	588.98
L	1391+84.38	-30.67	588.91	588.95
M	1391+94.38	-30.67	588.91	588.92
CL Brg. Pier	1392+06.13	-30.67	588.90	588.90
N	1392+16.13	-30.67	588.89	588.90
O	1392+26.13	-30.67	588.88	588.92
P	1392+36.13	-30.67	588.86	588.93
Q	1392+46.13	-30.67	588.84	588.96
R	1392+56.13	-30.67	588.82	588.97
S	1392+66.13	-30.67	588.79	588.99
T	1392+76.13	-30.67	588.76	588.98
U	1392+86.13	-30.67	588.72	588.96
V	1392+96.13	-30.67	588.68	588.93
W	1393+06.13	-30.67	588.64	588.86
X	1393+16.13	-30.67	588.59	588.78
Y	1393+26.13	-30.67	588.53	588.68
Z	1393+36.13	-30.67	588.48	588.56
CL Brg. N. Abut.	1393+47.88	-30.67	588.41	588.41
Bk. N. Abut.	1393+49.33	-30.67	588.40	588.40

GIRDER 6

Location	Station	Offset	Theoretical Grade Elevations	Theo. Grade Elevations Adj. for D.L. Deflection
Bk. S. Abut.	1390+58.71	-23.33	588.46	588.46
CL Brg. S. Abut.	1390+60.15	-23.33	588.47	588.47
A	1390+70.15	-23.33	588.52	588.59
B	1390+80.15	-23.33	588.56	588.70
C	1390+90.15	-23.33	588.60	588.79
D	1391+00.15	-23.33	588.64	588.86
E	1391+10.15	-23.33	588.67	588.92
F	1391+20.15	-23.33	588.70	588.95
G	1391+30.15	-23.33	588.73	588.96
H	1391+40.15	-23.33	588.75	588.95
I	1391+50.15	-23.33	588.77	588.93
J	1391+60.15	-23.33	588.78	588.90
K	1391+70.15	-23.33	588.79	588.87
L	1391+80.15	-23.33	588.79	588.83
M	1391+90.15	-23.33	588.79	588.81
CL Brg. Pier	1392+01.90	-23.33	588.79	588.79
N	1392+11.90	-23.33	588.78	588.79
O	1392+21.90	-23.33	588.77	588.81
P	1392+31.90	-23.33	588.76	588.83
Q	1392+41.90	-23.33	588.74	588.85
R	1392+51.90	-23.33	588.71	588.87
S	1392+61.90	-23.33	588.69	588.88
T	1392+71.90	-23.33	588.66	588.88
U	1392+81.90	-23.33	588.62	588.87
V	1392+91.90	-23.33	588.58	588.83
W	1393+01.90	-23.33	588.54	588.77
X	1393+11.90	-23.33	588.49	588.69
Y	1393+21.90	-23.33	588.44	588.59
Z	1393+31.90	-23.33	588.39	588.47
CL Brg. N. Abut.	1393+43.65	-23.33	588.32	588.32
Bk. N. Abut.	1393+45.09	-23.33	588.31	588.31

TOP OF SLAB ELEVATIONS
STRUCTURE NUMBERS 081-0188 (S.B.) & 081-0189 (N.B.)

PROFESSIONAL DESIGN FIRM LICENSE #184-001084

HANSON
Hanson Professional Services Inc.

JOB NO.	SHEET NO.	F.A.I. RTE.	SECTION	COUNTY	TOTAL SHEETS	SHEET NO.
05R1532A	SHEET NO. 9	280	81-1(HB)R	Rock Island	503	142
DATE 07/23/10	50 SHEETS	CONTRACT NO. 64815				
		ILLINOIS FED. AID PROJECT				

LAYOUT KRG/TLN 04/16/10
DRAWN MGM/JSM 07/21/10
REVIEWED KRG/TLN 07/21/10

07/22/2010
c:\pwidgs\workfolds\ost_deleteme\d1359210810868-6485-009-TOS_3of5.dgn

GIRDER 7

Location	Station	Offset	Theoretical Grade Elevations	Theo. Grade Elevations Adj. for D.L. Deflection
Bk. S. Abut.	1390+54.47	-16.00	588.30	588.30
CL Brg. S. Abut.	1390+55.92	-16.00	588.31	588.31
A	1390+65.92	-16.00	588.36	588.43
B	1390+75.92	-16.00	588.41	588.54
C	1390+85.92	-16.00	588.45	588.64
D	1390+95.92	-16.00	588.49	588.71
E	1391+05.92	-16.00	588.52	588.77
F	1391+15.92	-16.00	588.56	588.80
G	1391+25.92	-16.00	588.58	588.81
H	1391+35.92	-16.00	588.60	588.81
I	1391+45.92	-16.00	588.62	588.79
J	1391+55.92	-16.00	588.64	588.76
K	1391+65.92	-16.00	588.65	588.73
L	1391+75.92	-16.00	588.66	588.70
M	1391+85.92	-16.00	588.66	588.67
CL Brg. Pier	1391+97.67	-16.00	588.66	588.66
N	1392+07.67	-16.00	588.65	588.66
O	1392+17.67	-16.00	588.64	588.68
P	1392+27.67	-16.00	588.63	588.70
Q	1392+37.67	-16.00	588.61	588.72
R	1392+47.67	-16.00	588.59	588.75
S	1392+57.67	-16.00	588.56	588.76
T	1392+67.67	-16.00	588.54	588.76
U	1392+77.67	-16.00	588.50	588.75
V	1392+87.67	-16.00	588.46	588.71
W	1392+97.67	-16.00	588.42	588.65
X	1393+07.67	-16.00	588.38	588.57
Y	1393+17.67	-16.00	588.33	588.47
Z	1393+27.67	-16.00	588.28	588.36
CL Brg. N. Abut.	1393+39.42	-16.00	588.21	588.21
Bk. N. Abut.	1393+40.86	16.00	588.20	588.20

GIRDER 8

Location	Station	Offset	Theoretical Grade Elevations	Theo. Grade Elevations Adj. for D.L. Deflection
Bk. S. Abut.	1390+35.98	16.00	588.20	588.20
CL Brg. S. Abut.	1390+37.42	16.00	588.21	588.21
A	1390+47.42	16.00	588.27	588.34
B	1390+57.42	16.00	588.32	588.45
C	1390+67.42	16.00	588.37	588.56
D	1390+77.42	16.00	588.42	588.64
E	1390+87.42	16.00	588.46	588.70
F	1390+97.42	16.00	588.50	588.74
G	1391+07.42	16.00	588.53	588.76
H	1391+17.42	16.00	588.56	588.76
I	1391+27.42	16.00	588.59	588.75
J	1391+37.42	16.00	588.61	588.73
K	1391+47.42	16.00	588.63	588.70
L	1391+57.42	16.00	588.64	588.68
M	1391+67.42	16.00	588.65	588.66
CL Brg. Pier	1391+79.17	16.00	588.66	588.66
N	1391+89.17	16.00	588.66	588.67
O	1391+99.17	16.00	588.66	588.69
P	1392+09.17	16.00	588.65	588.72
Q	1392+19.17	16.00	588.64	588.75
R	1392+29.17	16.00	588.63	588.78
S	1392+39.17	16.00	588.61	588.80
T	1392+49.17	16.00	588.59	588.81
U	1392+59.17	16.00	588.56	588.80
V	1392+69.17	16.00	588.53	588.78
W	1392+79.17	16.00	588.50	588.73
X	1392+89.17	16.00	588.46	588.65
Y	1392+99.17	16.00	588.42	588.56
Z	1393+09.17	16.00	588.37	588.45
CL Brg. N. Abut.	1393+20.92	16.00	588.31	588.31
Bk. N. Abut.	1393+22.36	16.00	588.30	588.30

GIRDER 9

Location	Station	Offset	Theoretical Grade Elevations	Theo. Grade Elevations Adj. for D.L. Deflection
Bk. S. Abut.	1390+31.74	23.33	588.31	588.31
CL Brg. S. Abut.	1390+33.19	23.33	588.32	588.32
A	1390+43.19	23.33	588.38	588.45
B	1390+53.19	23.33	588.43	588.57
C	1390+63.19	23.33	588.48	588.67
D	1390+73.19	23.33	588.53	588.76
E	1390+83.19	23.33	588.58	588.82
F	1390+93.19	23.33	588.62	588.86
G	1391+03.19	23.33	588.65	588.88
H	1391+13.19	23.33	588.68	588.89
I	1391+23.19	23.33	588.71	588.87
J	1391+33.19	23.33	588.73	588.85
K	1391+43.19	23.33	588.75	588.83
L	1391+53.19	23.33	588.77	588.81
M	1391+63.19	23.33	588.78	588.80
CL Brg. Pier	1391+74.94	23.33	588.79	588.79
N	1391+84.94	23.33	588.79	588.80
O	1391+94.94	23.33	588.79	588.83
P	1392+04.94	23.33	588.79	588.86
Q	1392+14.94	23.33	588.78	588.89
R	1392+24.94	23.33	588.77	588.92
S	1392+34.94	23.33	588.75	588.95
T	1392+44.94	23.33	588.73	588.96
U	1392+54.94	23.33	588.71	588.95
V	1392+64.94	23.33	588.68	588.92
W	1392+74.94	23.33	588.65	588.88
X	1392+84.94	23.33	588.61	588.80
Y	1392+94.94	23.33	588.57	588.72
Z	1393+04.94	23.33	588.53	588.61
Cl. Brg. N. Abut.	1393+16.69	23.33	588.47	588.47
Bk. N. Abut.	1393+18.13	23.33	588.46	588.46

GIRDER 10

Location	Station	Offset	Theoretical Grade Elevations	Theo. Grade Elevations Adj. for D.L. Deflection
Bk. S. Abut.	1390+27.51	30.67	588.40	588.40
CL Brg. S. Abut.	1390+28.95	30.67	588.41	588.41
A	1390+38.95	30.67	588.47	588.54
B	1390+48.95	30.67	588.53	588.66
C	1390+58.95	30.67	588.58	588.76
D	1390+68.95	30.67	588.63	588.85
E	1390+78.95	30.67	588.67	588.92
F	1390+88.95	30.67	588.71	588.96
G	1390+98.95	30.67	588.75	588.98
H	1391+08.95	30.67	588.78	588.99
I	1391+18.95	30.67	588.81	588.98
J	1391+28.95	30.67	588.84	588.96
K	1391+38.95	30.67	588.86	588.94
L	1391+48.95	30.67	588.88	588.92
M	1391+58.95	30.67	588.89	588.91
CL Brg. Pier	1391+70.70	30.67	588.90	588.90
N	1391+80.70	30.67	588.91	588.92
O	1391+90.70	30.67	588.91	588.94
P	1392+00.70	30.67	588.91	588.98
Q	1392+10.70	30.67	588.90	589.01
R	1392+20.70	30.67	588.89	589.04
S	1392+30.70	30.67	588.87	589.07
T	1392+40.70	30.67	588.86	589.08
U	1392+50.70	30.67	588.83	589.08
V	1392+60.70	30.67	588.81	589.05
W	1392+70.70	30.67	588.78	589.00
X	1392+80.70	30.67	588.74	588.94
Y	1392+90.70	30.67	588.70	588.85
Z	1393+00.70	30.67	588.66	588.74
CL Brg. N. Abut.	1393+12.45	30.67	588.61	588.61
Bk. N. Abut.	1393+13.90	30.67	588.60	588.60

PROFESSIONAL DESIGN FIRM LICENSE #184-001084

HANSON
Hanson Professional Services Inc.

JOB NO. 05R1532A
DATE 07/23/10
SHEET NO. 10
50 SHEETS

TOP OF SLAB ELEVATIONS
STRUCTURE NUMBERS 081-0188 (S.B.) & 081-0189 (N.B.)

F.A.I. RTE.	SECTION	COUNTY	TOTAL SHEETS	SHEET NO.
280	81-1(HB)R	Rock Island	503	143

CONTRACT NO. 64815

ILLINOIS FED. AID PROJECT

LAYOUT	JKB/FLN	04/05/10
DRAWN	MGM/JDM	07/21/10
REVIEWED	JKB/FLN	07/21/10

07/22/2010
c:\pwidot_workdir\dot_rsd_delete\rsd1532R\081G189-64815-001T05_RAFT.dgn

N.B. CENTERLINE ROADWAY, P.G.L. & STAGE II CONSTRUCTION JOINT

Location	Station	Offset	Theoretical Grade Elevations	Theo. Grade Elevations Adj. for D.L. Deflection
Bk. S. Abut.	1390+26.74	32.00	588.41	588.41
CL Brg. S. Abut.	1390+28.18	32.00	588.42	588.42
A	1390+38.18	32.00	588.48	588.55
B	1390+48.18	32.00	588.54	588.68
C	1390+58.18	32.00	588.60	588.78
D	1390+68.18	32.00	588.64	588.87
E	1390+78.18	32.00	588.69	588.93
F	1390+88.18	32.00	588.73	588.98
G	1390+98.18	32.00	588.77	589.00
H	1391+08.18	32.00	588.80	589.01
I	1391+18.18	32.00	588.83	589.00
J	1391+28.18	32.00	588.86	588.98
K	1391+38.18	32.00	588.88	588.96
L	1391+48.18	32.00	588.90	588.94
M	1391+58.18	32.00	588.91	588.93
CL Brg. Pier	1391+69.93	32.00	588.92	588.92
N	1391+79.93	32.00	588.93	588.94
O	1391+89.93	32.00	588.93	588.97
P	1391+99.93	32.00	588.93	589.00
Q	1392+09.93	32.00	588.92	589.03
R	1392+19.93	32.00	588.91	589.07
S	1392+29.93	32.00	588.90	589.09
T	1392+39.93	32.00	588.88	589.10
U	1392+49.93	32.00	588.86	589.10
V	1392+59.93	32.00	588.83	589.07
W	1392+69.93	32.00	588.80	589.03
X	1392+79.93	32.00	588.76	588.96
Y	1392+89.93	32.00	588.73	588.87
Z	1392+99.93	32.00	588.68	588.77
CL Brg. N. Abut.	1393+11.68	32.00	588.63	588.63
Bk. N. Abut.	1393+13.13	32.00	588.62	588.62

N.B. STAGE I CONSTRUCTION JOINT

Location	Station	Offset	Theoretical Grade Elevations	Theo. Grade Elevations Adj. for D.L. Deflection
Bk. S. Abut.	1390+25.10	34.83	588.36	588.36
CL Brg. S. Abut.	1390+26.55	34.83	588.37	588.37
A	1390+36.55	34.83	588.43	588.50
B	1390+46.55	34.83	588.49	588.62
C	1390+56.55	34.83	588.54	588.73
D	1390+66.55	34.83	588.59	588.82
E	1390+76.55	34.83	588.64	588.88
F	1390+86.55	34.83	588.68	588.93
G	1390+96.55	34.83	588.72	588.95
H	1391+06.55	34.83	588.75	588.96
I	1391+16.55	34.83	588.78	588.95
J	1391+26.55	34.83	588.81	588.93
K	1391+36.55	34.83	588.83	588.91
L	1391+46.55	34.83	588.85	588.89
M	1391+56.55	34.83	588.87	588.88
CL Brg. Pier	1391+68.30	34.83	588.88	588.88
N	1391+78.30	34.83	588.88	588.89
O	1391+88.30	34.83	588.89	588.92
P	1391+98.30	34.83	588.88	588.95
Q	1392+08.30	34.83	588.88	588.99
R	1392+18.30	34.83	588.87	589.02
S	1392+28.30	34.83	588.85	589.05
T	1392+38.30	34.83	588.84	589.06
U	1392+48.30	34.83	588.81	589.06
V	1392+58.30	34.83	588.79	589.03
W	1392+68.30	34.83	588.76	588.99
X	1392+78.30	34.83	588.73	588.92
Y	1392+88.30	34.83	588.69	588.83
Z	1392+98.30	34.83	588.65	588.73
CL Brg. N. Abut.	1393+10.05	34.83	588.59	588.59
Bk. N. Abut.	1393+11.49	34.83	588.59	588.59

GIRDER 11

Location	Station	Offset	Theoretical Grade Elevations	Theo. Grade Elevations Adj. for D.L. Deflection
Bk. S. Abut.	1390+23.28	38.00	588.30	588.30
CL Brg. S. Abut.	1390+24.72	38.00	588.31	588.31
A	1390+34.72	38.00	588.37	588.44
B	1390+44.72	38.00	588.43	588.56
C	1390+54.72	38.00	588.48	588.67
D	1390+64.72	38.00	588.53	588.76
E	1390+74.72	38.00	588.58	588.83
F	1390+84.72	38.00	588.62	588.87
G	1390+94.72	38.00	588.66	588.89
H	1391+04.72	38.00	588.70	588.90
I	1391+14.72	38.00	588.73	588.89
J	1391+24.72	38.00	588.76	588.88
K	1391+34.72	38.00	588.78	588.86
L	1391+44.72	38.00	588.80	588.84
M	1391+54.72	38.00	588.81	588.83
CL Brg. Pier	1391+66.47	38.00	588.83	588.83
N	1391+76.47	38.00	588.83	588.84
O	1391+86.47	38.00	588.84	588.87
P	1391+96.47	38.00	588.83	588.91
Q	1392+06.47	38.00	588.83	588.94
R	1392+16.47	38.00	588.82	588.98
S	1392+26.47	38.00	588.81	589.00
T	1392+36.47	38.00	588.79	589.02
U	1392+46.47	38.00	588.77	589.01
V	1392+56.47	38.00	588.74	588.99
W	1392+66.47	38.00	588.72	588.94
X	1392+76.47	38.00	588.68	588.88
Y	1392+86.47	38.00	588.65	588.79
Z	1392+96.47	38.00	588.61	588.69
CL Brg. N. Abut.	1393+08.22	38.00	588.55	588.55
Bk. N. Abut.	1393+09.66	38.00	588.55	588.55

GIRDER 12

Location	Station	Offset	Theoretical Grade Elevations	Theo. Grade Elevations Adj. for D.L. Deflection
Bk. S. Abut.	1390+19.04	45.33	588.15	588.15
CL Brg. S. Abut.	1390+20.49	45.33	588.16	588.16
A	1390+30.49	45.33	588.22	588.29
B	1390+40.49	45.33	588.28	588.42
C	1390+50.49	45.33	588.34	588.53
D	1390+60.49	45.33	588.39	588.62
E	1390+70.49	45.33	588.44	588.68
F	1390+80.49	45.33	588.48	588.73
G	1390+90.49	45.33	588.53	588.76
H	1391+00.49	45.33	588.56	588.76
I	1391+10.49	45.33	588.59	588.76
J	1391+20.49	45.33	588.62	588.74
K	1391+30.49	45.33	588.65	588.73
L	1391+40.49	45.33	588.67	588.71
M	1391+50.49	45.33	588.69	588.70
CL Brg. Pier	1391+62.24	45.33	588.70	588.70
N	1391+72.24	45.33	588.71	588.72
O	1391+82.24	45.33	588.71	588.75
P	1391+92.24	45.33	588.71	588.78
Q	1392+02.24	45.33	588.71	588.82
R	1392+12.24	45.33	588.70	588.86
S	1392+22.24	45.33	588.69	588.89
T	1392+32.24	45.33	588.68	588.90
U	1392+42.24	45.33	588.66	588.90
V	1392+52.24	45.33	588.63	588.88
W	1392+62.24	45.33	588.61	588.84
X	1392+72.24	45.33	588.58	588.77
Y	1392+82.24	45.33	588.54	588.69
Z	1392+92.24	45.33	588.50	588.58
CL Brg. N. Abut.	1393+03.99	45.33	588.45	588.45
Bk. N. Abut.	1393+05.43	45.33	588.44	588.44

TOP OF SLAB ELEVATIONS
STRUCTURE NUMBERS 081-0188 (S.B.) & 081-0189 (N.B.)

PROFESSIONAL DESIGN FIRM LICENSE #184-001084

HANSON
Hanson Professional Services Inc.

JOB NO.	SHEET NO. 11	F.A.I. RTE.	SECTION	COUNTY	TOTAL SHEETS	SHEET NO.
05R1532A		280	81-1(HB)R	Rock Island	503	144
DATE 07/23/10	50 SHEETS	CONTRACT NO. 64815				
		ILLINOIS FED. AID PROJECT				

LAYOUT	JKG/FLN	04/05/10
DRAWN	MCM/JDM	07/21/10
REVIEWED	JKG/FLN	07/21/10

07/22/2010
c:\pwidot_workareas_hpi_data\jkg\3582\D3582D188-E4815-SH-T05_SlaBsign

GIRDER 13

Location	Station	Offset	Theoretical Grade Elevations	Theo. Grade Elevations Adj. for D.L. Deflection
Bk. S. Abut.	1390+14.81	52.67	587.97	587.97
CL Brg. S. Abut.	1390+16.25	52.67	587.98	587.98
A	1390+26.25	52.67	588.04	588.11
B	1390+36.25	52.67	588.10	588.24
C	1390+46.25	52.67	588.16	588.35
D	1390+56.25	52.67	588.22	588.44
E	1390+66.25	52.67	588.27	588.51
F	1390+76.25	52.67	588.31	588.56
G	1390+86.25	52.67	588.36	588.59
H	1390+96.25	52.67	588.39	588.60
I	1391+06.25	52.67	588.43	588.59
J	1391+16.25	52.67	588.46	588.58
K	1391+26.25	52.67	588.49	588.56
L	1391+36.25	52.67	588.51	588.55
M	1391+46.25	52.67	588.53	588.54
CL Brg. Pier	1391+58.00	52.67	588.54	588.54
N	1391+68.00	52.67	588.55	588.56
O	1391+78.00	52.67	588.56	588.60
P	1391+88.00	52.67	588.56	588.63
Q	1391+98.00	52.67	588.56	588.67
R	1392+08.00	52.67	588.55	588.71
S	1392+18.00	52.67	588.54	588.74
T	1392+28.00	52.67	588.53	588.76
U	1392+38.00	52.67	588.51	588.76
V	1392+48.00	52.67	588.49	588.74
W	1392+58.00	52.67	588.47	588.70
X	1392+68.00	52.67	588.44	588.63
Y	1392+78.00	52.67	588.40	588.55
Z	1392+88.00	52.67	588.37	588.45
CL Brg. N. Abut.	1392+99.75	52.67	588.32	588.32
Bk. N. Abut.	1393+01.19	52.67	588.31	588.31

GIRDER 14

Location	Station	Offset	Theoretical Grade Elevations	Theo. Grade Elevations Adj. for D.L. Deflection
Bk. S. Abut.	1390+10.57	60.00	587.78	587.78
CL Brg. S. Abut.	1390+12.02	60.00	587.79	587.79
A	1390+22.02	60.00	587.86	587.93
B	1390+32.02	60.00	587.93	588.06
C	1390+42.02	60.00	587.99	588.17
D	1390+52.02	60.00	588.04	588.27
E	1390+62.02	60.00	588.09	588.34
F	1390+72.02	60.00	588.14	588.39
G	1390+82.02	60.00	588.19	588.42
H	1390+92.02	60.00	588.23	588.43
I	1391+02.02	60.00	588.26	588.42
J	1391+12.02	60.00	588.29	588.41
K	1391+22.02	60.00	588.32	588.40
L	1391+32.02	60.00	588.35	588.39
M	1391+42.02	60.00	588.37	588.38
CL Brg. Pier	1391+53.77	60.00	588.39	588.39
N	1391+63.77	60.00	588.40	588.41
O	1391+73.77	60.00	588.40	588.44
P	1391+83.77	60.00	588.41	588.48
Q	1391+93.77	60.00	588.41	588.52
R	1392+03.77	60.00	588.40	588.56
S	1392+13.77	60.00	588.40	588.59
T	1392+23.77	60.00	588.38	588.61
U	1392+33.77	60.00	588.37	588.61
V	1392+43.77	60.00	588.35	588.59
W	1392+53.77	60.00	588.32	588.55
X	1392+63.77	60.00	588.30	588.49
Y	1392+73.77	60.00	588.27	588.41
Z	1392+83.77	60.00	588.23	588.31
CL Brg. N. Abut.	1392+95.52	60.00	588.18	588.18
Bk. N. Abut.	1392+96.96	60.00	588.18	588.18

PROFESSIONAL DESIGN FIRM LICENSE #184-001084

HANSON
Hanson Professional Services Inc.

JOB NO. 05R1532A
DATE 07/23/10
SHEET NO. 12
50 SHEETS

TOP OF SLAB ELEVATIONS
STRUCTURE NUMBERS 081-0188 (S.B.) & 081-0189 (N.B.)

F.A.I. RTE.	SECTION	COUNTY	TOTAL SHEETS	SHEET NO.
280	81-1(HB)R	Rock Island	503	145

CONTRACT NO. 64815

ILLINOIS FED. AID PROJECT

LAYOUT	JKR/F.N.	04/05/10
DRAWN	MGM/JDM	07/21/10
REVIEWED	JKR/F.N.	07/21/10

07/22/2010
c:\pwidot\workjob_dot_deletevault\65820\D0188 64815 02-T05_Ed1.dgn

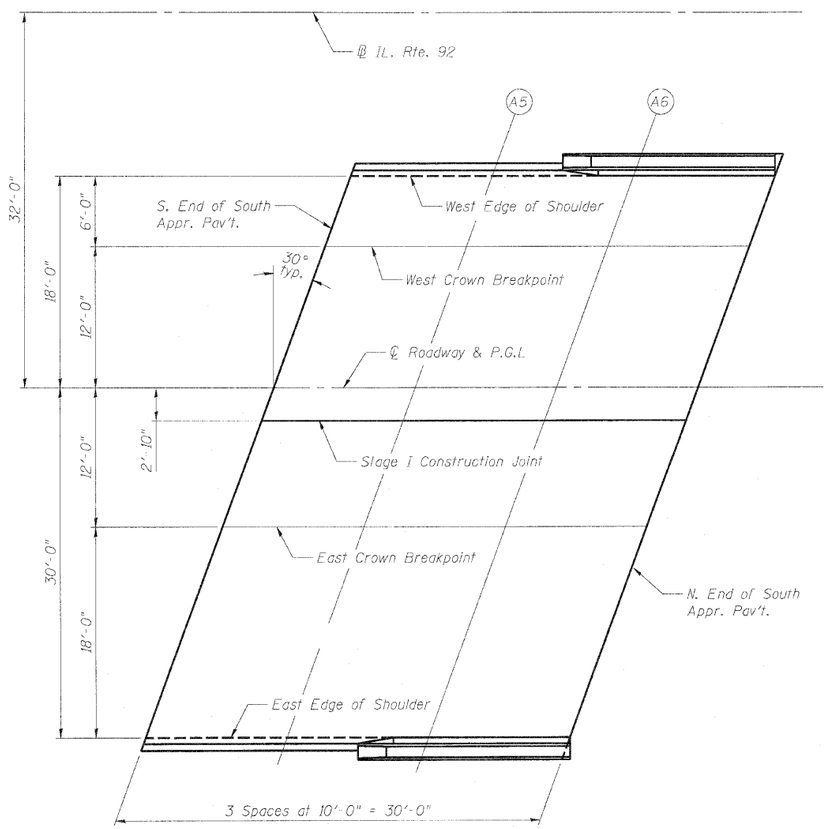

PLAN

South Approach (N.B.)

N

Notes:
Offsets are to ℄ IL. Rte. 92.

Negative (-) offsets are offsets to the left of the ℄ while looking upstation.

WEST EDGE OF SHOULDER

Location	Station	Offset	Theoretical Grade Elevations
S. End South Appr. Pav't.	1390+07.13	14.00	587.97
A5	1390+17.13	14.00	588.04
A6	1390+27.13	14.00	588.10
N. End South Appr. Pav't.	1390+37.13	14.00	588.17

STAGE I CONSTRUCTION JOINT

Location	Station	Offset	Theoretical Grade Elevations
S. End South Appr. Pav't.	1389+95.10	34.83	588.15
A5	1390+05.10	34.83	588.22
A6	1390+15.10	34.83	588.29
N. End South Appr. Pav't.	1390+25.10	34.83	588.36

WEST CROWN BREAKPOINT

Location	Station	Offset	Theoretical Grade Elevations
S. End South Appr. Pav't.	1390+03.67	20.00	588.07
A5	1390+13.67	20.00	588.14
A6	1390+23.67	20.00	588.21
N. End South Appr. Pav't.	1390+33.67	20.00	588.27

EAST CROWN BREAKPOINT

Location	Station	Offset	Theoretical Grade Elevations
S. End South Appr. Pav't.	1389+89.81	44.00	587.96
A5	1389+99.81	44.00	588.04
A6	1390+09.81	44.00	588.11
N. End South Appr. Pav't.	1390+19.81	44.00	588.18

CL ROADWAY & P.G.L.

Location	Station	Offset	Theoretical Grade Elevations
S. End South Appr. Pav't.	1389+96.74	32.00	588.20
A5	1390+06.74	32.00	588.28
A6	1390+16.74	32.00	588.35
N. End South Appr. Pav't.	1390+26.74	32.00	588.41

EAST EDGE OF SHOULDER

Location	Station	Offset	Theoretical Grade Elevations
S. End South Appr. Pav't.	1389+79.42	62.00	587.50
A5	1389+89.42	62.00	587.59
A6	1389+99.42	62.00	587.66
N. End South Appr. Pav't.	1390+09.42	62.00	587.73

TOP OF APPROACH SLAB ELEVATIONS
SOUTH APPROACH - N.B.
STRUCTURE NUMBERS 081-0188 (S.B.) & 081-0189 (N.B.)

PROFESSIONAL DESIGN FIRM LICENSE #184-001084

HANSON
Hanson Professional Services Inc.

JOB NO.	SHEET NO. 13	F.A.I. RTE.	SECTION	COUNTY	TOTAL SHEETS	SHEET NO.
05R1532A	50 SHEETS	280	81-1(HB)R	Rock Island	503	146
DATE 07/23/10		CONTRACT NO. 64815				
		ILLINOIS FED. AID PROJECT				

LAYOUT	JRY/FLN	04/05/10
DRAWN	WDM/JDM	07/21/10
REVIEWED	JRY/FLN	07/21/10

07/22/2010
c:\pwGw_work\ds_not_deleted\d5552\D0\D089-E4815-01-TOS_S_App_NB.dgn

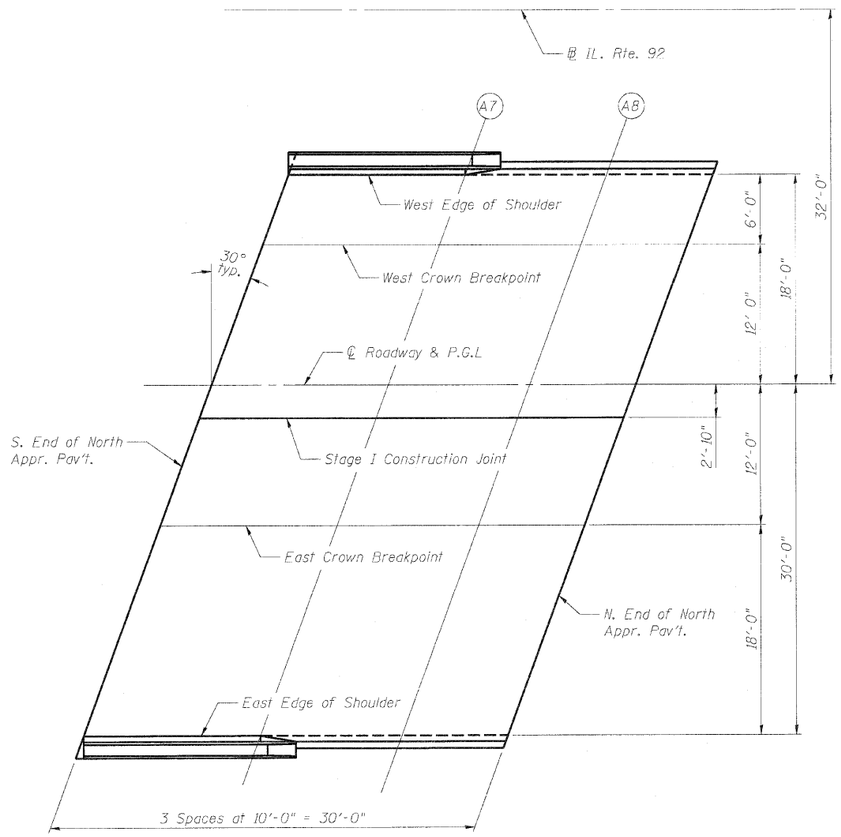

PLAN

North Approach (N.B.)

N

Notes:
Offsets are to ℄ IL. Rte. 92.

Negative (-) offsets are offsets to the left of the ℄ while looking upstation.

WEST EDGE OF SHOULDER

Location	Station	Offset	Theoretical Grade Elevations
S. End North Appr. Pav't.	1393+23.52	14.00	588.26
A7	1393+33.52	14.00	588.20
A8	1393+43.52	14.00	588.14
N. End North Appr. Pav't.	1393+53.52	14.00	588.08

STAGE I CONSTRUCTION JOINT

Location	Station	Offset	Theoretical Grade Elevations
S. End North Appr. Pav't.	1393+11.49	34.83	588.59
A7	1393+21.49	34.83	588.54
A8	1393+31.49	34.83	588.48
N. End North Appr. Pav't.	1393+41.49	34.83	588.42

WEST CROWN BREAKPOINT

Location	Station	Offset	Theoretical Grade Elevations
S. End North Appr. Pav't.	1393+20.05	20.00	588.40
A7	1393+30.05	20.00	588.35
A8	1393+40.05	20.00	588.29
N. End North Appr. Pav't.	1393+50.05	20.00	588.23

EAST CROWN BREAKPOINT

Location	Station	Offset	Theoretical Grade Elevations
S. End North Appr. Pav't.	1393+06.20	44.00	588.47
A7	1393+16.20	44.00	588.42
A8	1393+26.20	44.00	588.37
N. End North Appr. Pav't.	1393+36.20	44.00	588.31

CL ROADWAY & P.G.L.

Location	Station	Offset	Theoretical Grade Elevations
S. End North Appr. Pav't.	1393+13.13	32.00	588.62
A7	1393+23.13	32.00	588.57
A8	1393+33.13	32.00	588.52
N. End North Appr. Pav't.	1393+43.13	32.00	588.46

EAST EDGE OF SHOULDER

Location	Station	Offset	Theoretical Grade Elevations
S. End North Appr. Pav't.	1392+95.80	62.00	588.14
A7	1393+05.80	62.00	588.10
A8	1393+15.80	62.00	588.05
N. End North Appr. Pav't.	1393+25.80	62.00	587.99

TOP OF APPROACH SLAB ELEVATIONS
NORTH APPROACH - N.B.
STRUCTURE NUMBERS 081-0188 (S.B.) & 081-0189 (N.B.)

PROFESSIONAL DESIGN FIRM LICENSE #184-001084

HANSON
Hanson Professional Services Inc.

JOB NO.	SHEET NO. 14	F.A.I. RTE.	SECTION	COUNTY	TOTAL SHEETS	SHEET NO.
05R1532A	50 SHEETS	280	81-1(HB)R	Rock Island	503	147
DATE 07/23/10		CONTRACT NO. 64815				
		ILLINOIS FED. AID PROJECT				

LAYOUT	KGV/F.N.	04/05/10
DRAWN	MDW/JDM	07/21/10
REVIEWED	KGV/F.N.	07/21/10

07/23/2010
c:\pwidot\workspace\ndot_delete\dgn\3592\D081088-64815-04TOS_JL_App_NB.dgn

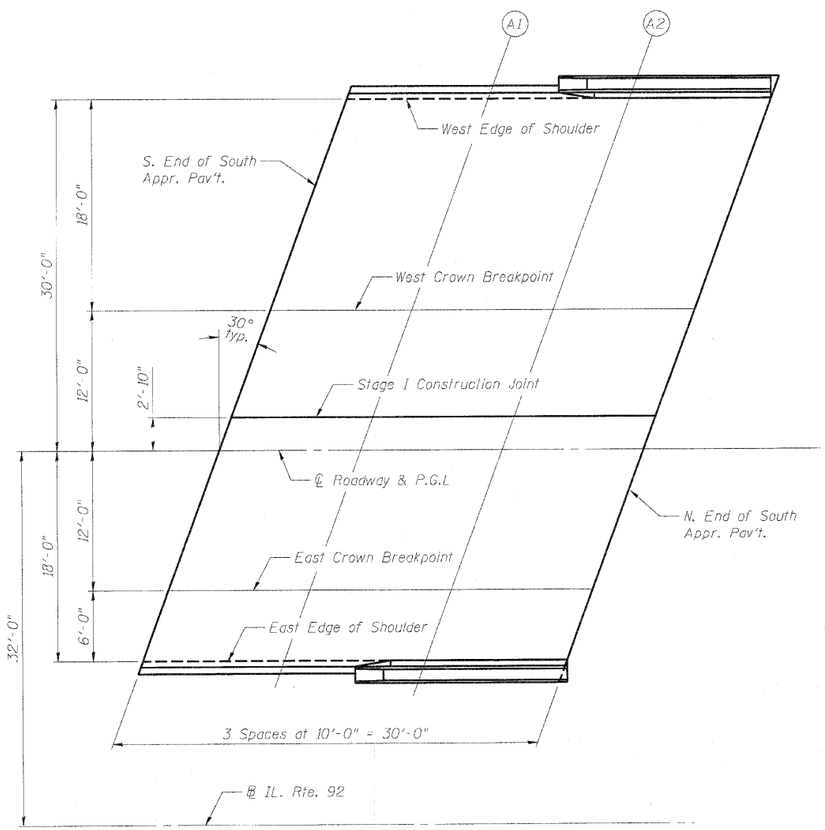

PLAN

South Approach (S.B.)

N

Notes:
Offsets are to ℄ IL. Rte. 92.

Negative (-) offsets are offsets to the left of the ℄ while looking upstation.

WEST EDGE OF SHOULDER

Location	Station	Offset	Theoretical Grade Elevations
S. End South Appr. Pav't.	1390+51.03	-62.00	587.99
A1	1390+61.03	-62.00	588.05
A2	1390+71.03	62.00	588.10
N. End South Appr. Pav't.	1390+81.03	-62.00	588.14

CL ROADWAY & P.G.L.

Location	Station	Offset	Theoretical Grade Elevations
S. End South Appr. Pav't.	1390+33.71	-32.00	588.46
A1	1390+43.71	-32.00	588.52
A2	1390+53.71	-32.00	588.57
N. End South Appr. Pav't.	1390+63.71	-32.00	588.62

WEST CROWN BREAKPOINT

Location	Station	Offset	Theoretical Grade Elevations
S. End South Appr. Pav't.	1390+40.64	-44.00	588.31
A1	1390+50.64	-44.00	588.37
A2	1390+60.64	-44.00	588.42
N. End South Appr. Pav't.	1390+70.64	-44.00	588.47

EAST CROWN BREAKPOINT

Location	Station	Offset	Theoretical Grade Elevations
S. End South Appr. Pav't.	1390+26.78	-20.00	588.23
A1	1390+36.78	-20.00	588.29
A2	1390+46.78	-20.00	588.35
N. End South Appr. Pav't.	1390+56.78	-20.00	588.40

STAGE I CONSTRUCTION JOINT

Location	Station	Offset	Theoretical Grade Elevations
S. End South Appr. Pav't.	1390+35.35	-34.83	588.42
A1	1390+45.35	-34.83	588.48
A2	1390+55.35	-34.83	588.54
N. End South Appr. Pav't.	1390+65.35	-34.83	588.59

EAST EDGE OF SHOULDER

Location	Station	Offset	Theoretical Grade Elevations
S. End South Appr. Pav't.	1390+23.32	-14.00	588.08
A1	1390+33.32	-14.00	588.14
A2	1390+43.32	-14.00	588.20
N. End South Appr. Pav't.	1390+53.32	-14.00	588.26

TOP OF APPROACH SLAB ELEVATIONS
SOUTH APPROACH - S.B.
STRUCTURE NUMBERS 081-0188 (S.B.) & 081-0189 (N.B.)

PROFESSIONAL DESIGN FIRM LICENSE #184-001084

HANSON
Hanson Professional Services Inc.

JOB NO. 05R1532A
DATE 07/23/10

SHEET NO. 15
50 SHEETS

F.A.I. RTE.	SECTION	COUNTY	TOTAL SHEETS	SHEET NO.
280	81-1(HB)R	Rock Island	503	148

CONTRACT NO. 64815

ILLINOIS FED. AID PROJECT

LAYOUT	JCR/F.L.N.	04/05/10
DRAWN	WGM/JDN	07/21/10
REVIEWED	JCR/F.L.N.	07/21/10

07/23/2010
c:\pwidot.workareas_net_dot\dot\jlnd\56592\D81089\64815-05-T05_S_App_S3.dgn

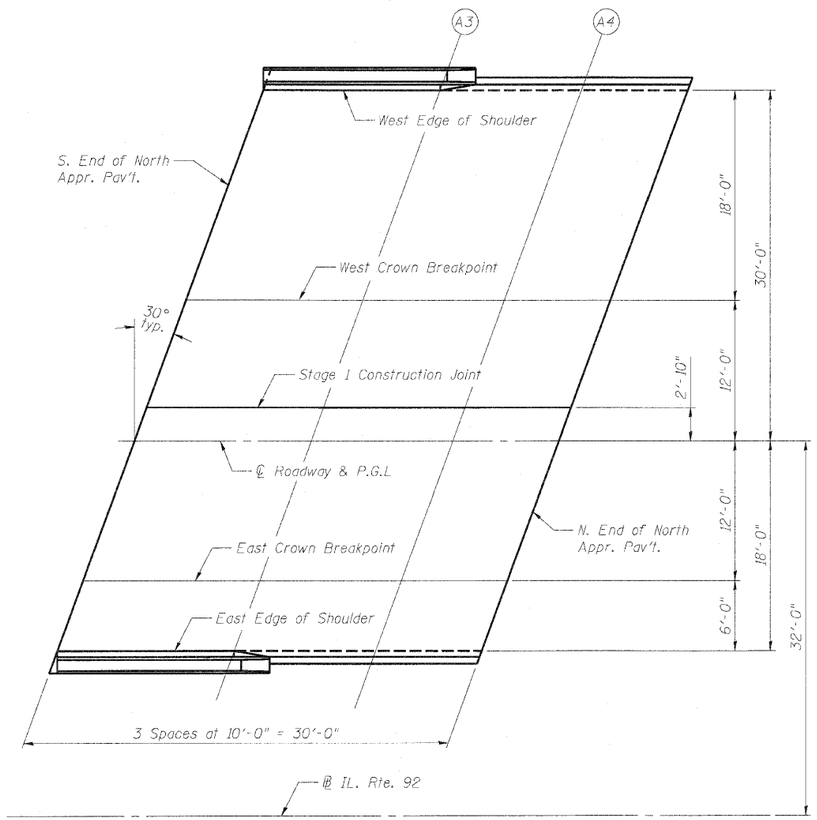

PLAN

North Approach (S.B.)

N

Notes:
Offsets are to ℄ IL. Rte. 92.

Negative (-) offsets are offsets to the left of the ℄ while looking upstation.

WEST EDGE OF SHOULDER

Location	Station	Offset	Theoretical Grade Elevations
S. End North Appr. Pav't.	1393+67.42	-62.00	587.73
A3	1393+77.42	-62.00	587.66
A4	1393+87.42	-62.00	587.59
N. End North Appr. Pav't.	1393+97.42	-62.00	587.50

CL ROADWAY & P.G.L.

Location	Station	Offset	Theoretical Grade Elevations
S. End North Appr. Pav't.	1393+50.10	-32.00	588.41
A3	1393+60.10	-32.00	588.35
A4	1393+70.10	-32.00	588.28
N. End North Appr. Pav't.	1393+80.10	-32.00	588.20

WEST CROWN BREAKPOINT

Location	Station	Offset	Theoretical Grade Elevations
S. End North Appr. Pav't.	1393+57.02	-44.00	588.18
A3	1393+67.02	-44.00	588.11
A4	1393+77.02	-44.00	588.04
N. End North Appr. Pav't.	1393+87.02	-44.00	587.96

EAST CROWN BREAKPOINT

Location	Station	Offset	Theoretical Grade Elevations
S. End North Appr. Pav't.	1393+43.17	-20.00	588.27
A3	1393+53.17	-20.00	588.21
A4	1393+63.17	-20.00	588.14
N. End North Appr. Pav't.	1393+73.17	-20.00	588.07

STAGE I CONSTRUCTION JOINT

Location	Station	Offset	Theoretical Grade Elevations
S. End North Appr. Pav't.	1393+51.73	-34.83	588.36
A3	1393+61.73	-34.83	588.29
A4	1393+71.73	-34.83	588.22
N. End North Appr. Pav't.	1393+81.73	-34.83	588.15

EAST EDGE OF SHOULDER

Location	Station	Offset	Theoretical Grade Elevations
S. End North Appr. Pav't.	1393+39.70	-14.00	588.17
A3	1393+49.70	-14.00	588.10
A4	1393+59.70	-14.00	588.04
N. End North Appr. Pav't.	1393+69.70	-14.00	587.97

TOP OF APPROACH SLAB ELEVATIONS
NORTH APPROACH - S.B.
STRUCTURE NUMBERS 081-0188 (S.B.) & 081-0189 (N.B.)

PROFESSIONAL DESIGN FIRM LICENSE #184-001084

HANSON
Hanson Professional Services Inc.

JOB NO.	SHEET NO.	F.A.I. RTE.	SECTION	COUNTY	TOTAL SHEETS	SHEET NO.
05R1532A	16	280	81-1(HB)R	Rock Island	503	149
DATE 07/23/10	50 SHEETS			CONTRACT NO. 64815		
			ILLINOIS FED. AID PROJECT			

LAYOUT	JKR/FLN	04/05/10
DRAWN	MGM/JDM	07/21/10
REVIEWED	JKR/FLN	07/21/10

07/22/2010
c:\pwidot\workloc_pdf\d0\dhd\hdhd\R1532\D80189-64815-DR-TOS_N App. SBridge

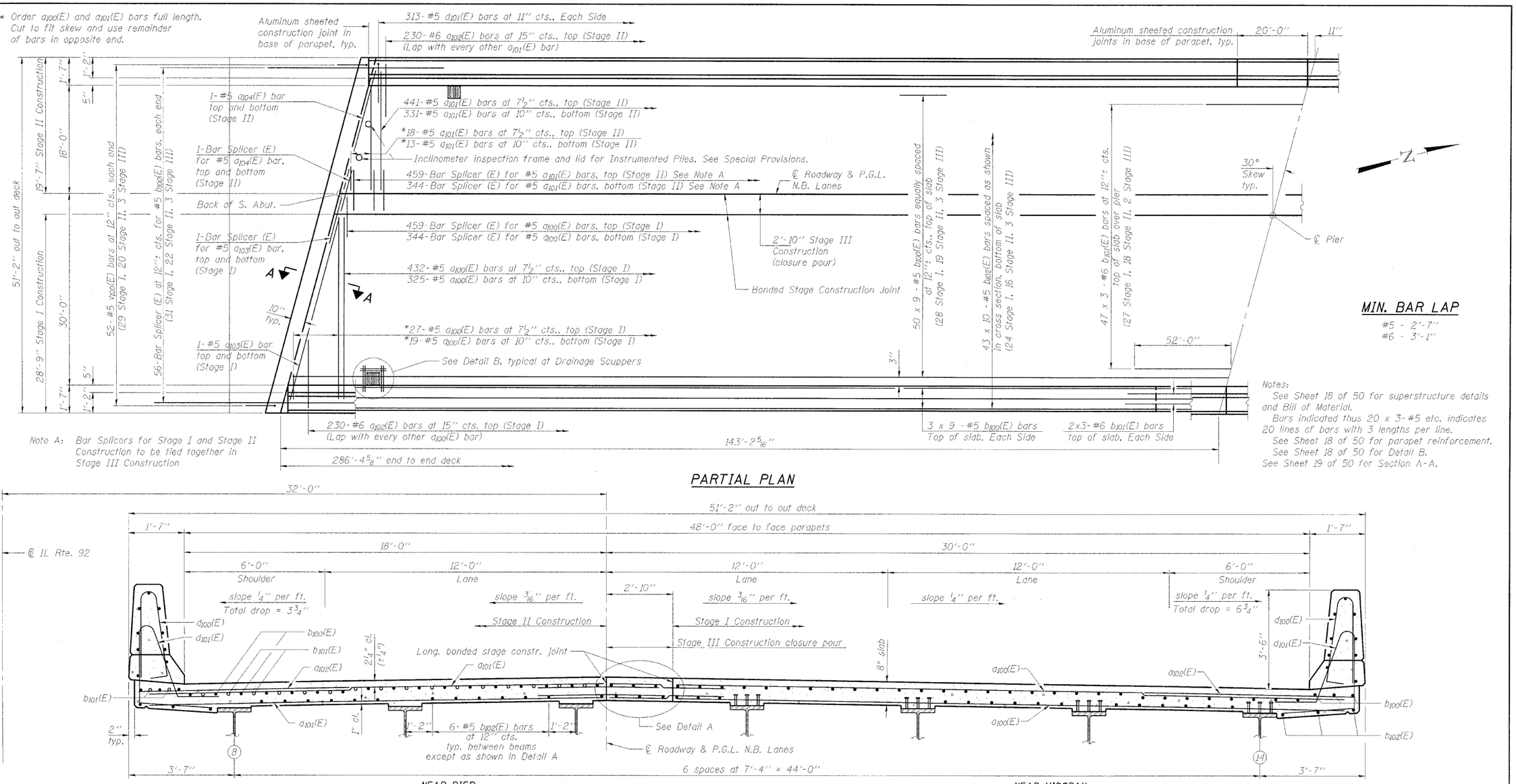

PARTIAL PLAN

CROSS SECTION
(Looking North at North Bound Lanes)

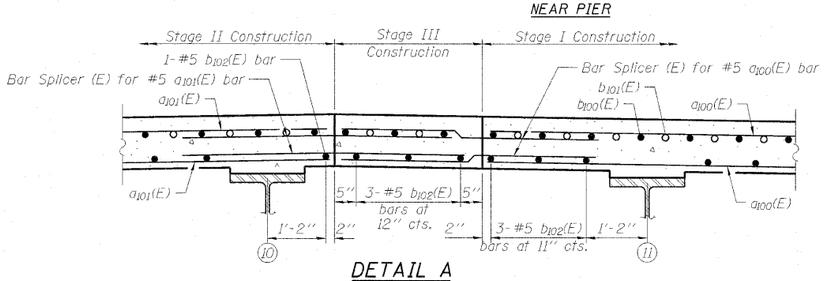

DETAIL A

PROFESSIONAL DESIGN FIRM LICENSE #184-001084

HANSON
Hanson Professional Services Inc.

JOB NO. 05R1532A
DATE 05/21/10
SHEET NO. 17
50 SHEETS

SUPERSTRUCTURE - N.B.

STRUCTURE NUMBERS 081-0188 (S.B.) & 081-0189 (N.B.)

F.A.I. RTE.	SECTION	COUNTY	TOTAL SHEETS	SHEET NO.
280	81-1(HB)R	Rock Island	503	150
		CONTRACT NO. 64815		
	ILLINOIS	FED. AID PROJECT		

LAYOUT	JKR/FEN	01/05/10
DRAWN	MGM/JEN	01/22/10
REVIEWED	JKR/FEN	01/21/10

09-29-2010
c:\pw-kw.wrr\kds_rd_dl\kdhq\hq\05R2QGB\05R1532-F\B15-07-Super Str_NB.dgn

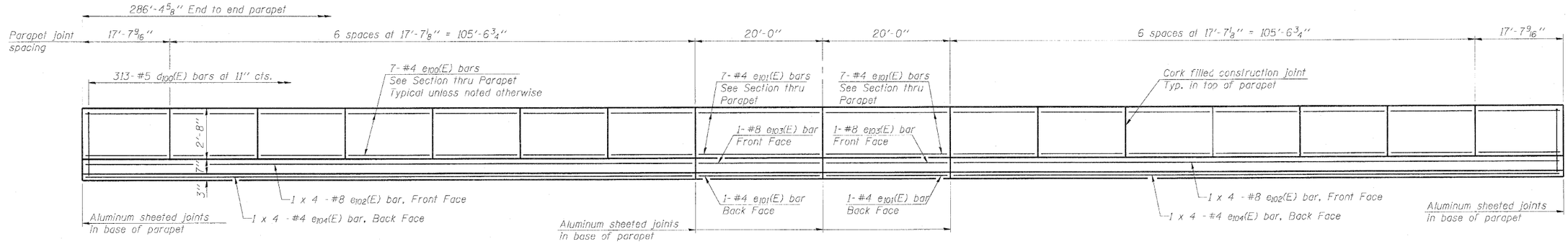

INSIDE ELEVATION OF PARAPET

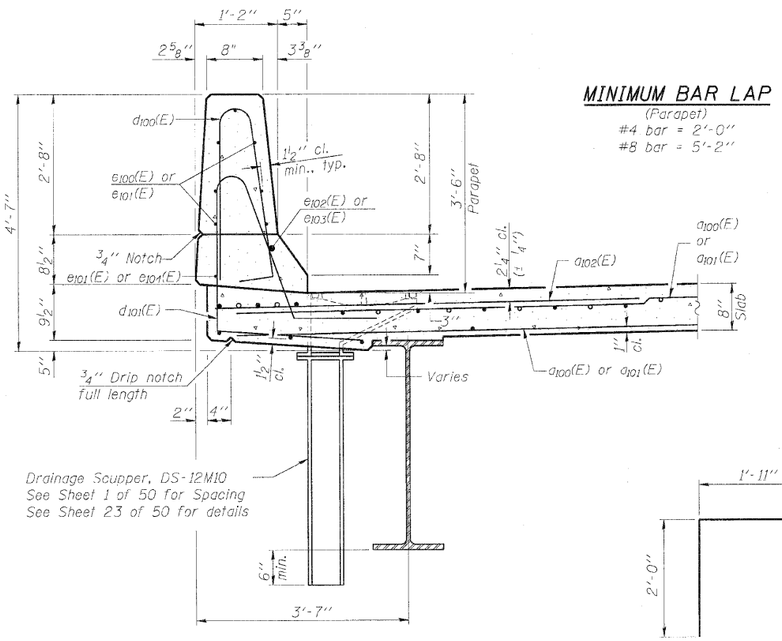

MINIMUM BAR LAP

(Parapet)
#4 bar = 2'-0"
#8 bar = 5'-2"

SECTION THRU PARAPET

Floor drains shall be located clear of all diaphragms

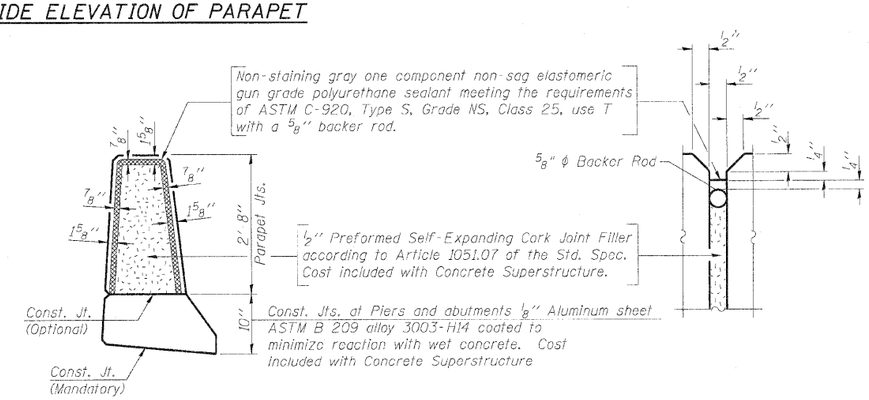

PARAPET JOINT DETAILS

SUPERSTRUCTURE BILL OF MATERIAL

Bar	No.	Size	Length	Shape
a100(E)	803	#5	28'-4"	
a101(E)	803	#5	19'-2"	
a102(E)	460	#6	6'-6"	
a103(E)	4	#5	32'-8"	
a104(E)	4	#5	22'-1"	
a110(E)	24	#5	4'-0"	
b100(E)	504	#5	34'-3"	
b101(E)	153	#6	37'-0"	
b102(E)	430	#5	31'-3"	
d100(E)	626	#5	6'-10"	
d101(E)	626	#5	7'-11"	
e100(E)	196	#4	17'-3"	
e101(E)	32	#4	19'-8"	
e102(E)	16	#8	34'-9"	
e103(E)	4	#8	19'-8"	
e104(E)	16	#4	32'-6"	
m100(E)	10	#6	32'-10"	
m101(E)	10	#6	22'-3"	
m102(E)	12	#6	9'-11"	
m103(E)	12	#6	11'-10"	
m104(E)	4	#6	10'-9"	
m105(E)	4	#6	3'-9"	
m106(E)	10	#6	8'-1"	
m107(E)	2	#6	3'-3"	
m108(E)	2	#6	4'-5"	
s100(E)	96	#5	6'-10"	
s101(E)	86	#4	12'-10"	
v100(E)	104	#5	3'-11"	
Reinforcement Bars, Epoxy Coated			Pound	102,770
Concrete Superstructure			Cu. Yds.	511.0

Bars indicated thus 1 x 4 -#5 etc. indicates 1 line of bars with 4 lengths per line.

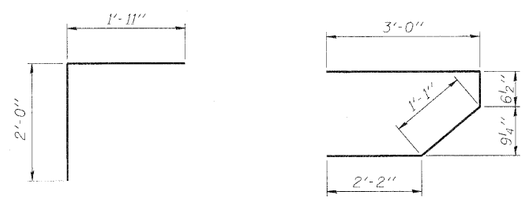

BAR v100(E)

BAR s100(E)

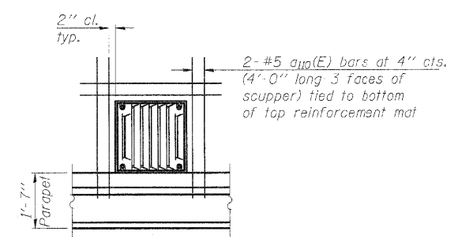

DETAIL B

Note:
Cut longitudinal reinforcement to clear drainage scuppers.

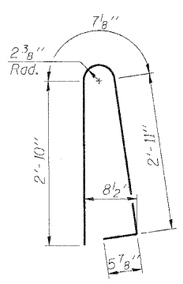

BAR d100(E)

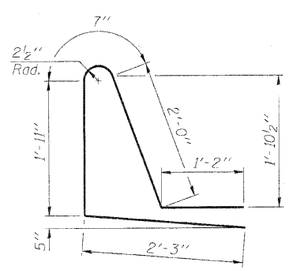

BAR d101(E)

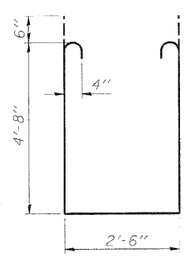

BAR s101(E)

SUPERSTRUCTURE DETAILS - N.B.

STRUCTURE NUMBERS 081-0188 (S.B.) & 081-0189 (N.B.)

PROFESSIONAL DESIGN FIRM LICENSE #184-001084

HANSON
Hanson Professional Services Inc.

JOB NO.	SHEET NO.	F.A.I. RTE.	SECTION	COUNTY	TOTAL SHEETS	SHEET NO.
05R1532A	18	280	81-1(HB)R	Rock Island	503	151
DATE 07/23/10	50 SHEETS			CONTRACT NO. 64815		
				ILLINOIS FED. AID PROJECT		

LAYOUT	KRJ/F.N.	04/05/10
DRAWN	MGM/JDN	07/21/10
REVIEWED	KSR/F.N.	07/21/10

07/23/2010
c:\pwidos.work\db_rot_de\de\dmd7692\D80188-E4B15-DB-SuperStr_Det_NB.dgn

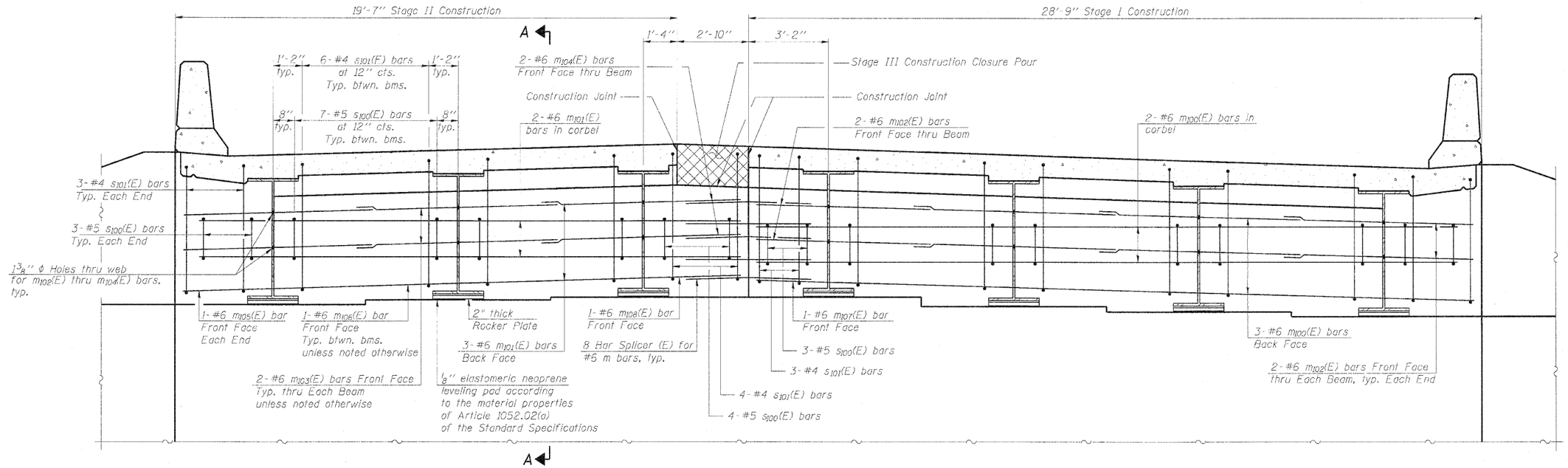

DIAPHRAGM ELEVATION AT ABUTMENT

(Looking North at North Abutment) (South Abutment similar)
Dimensions at right angles to ℄ Roadway

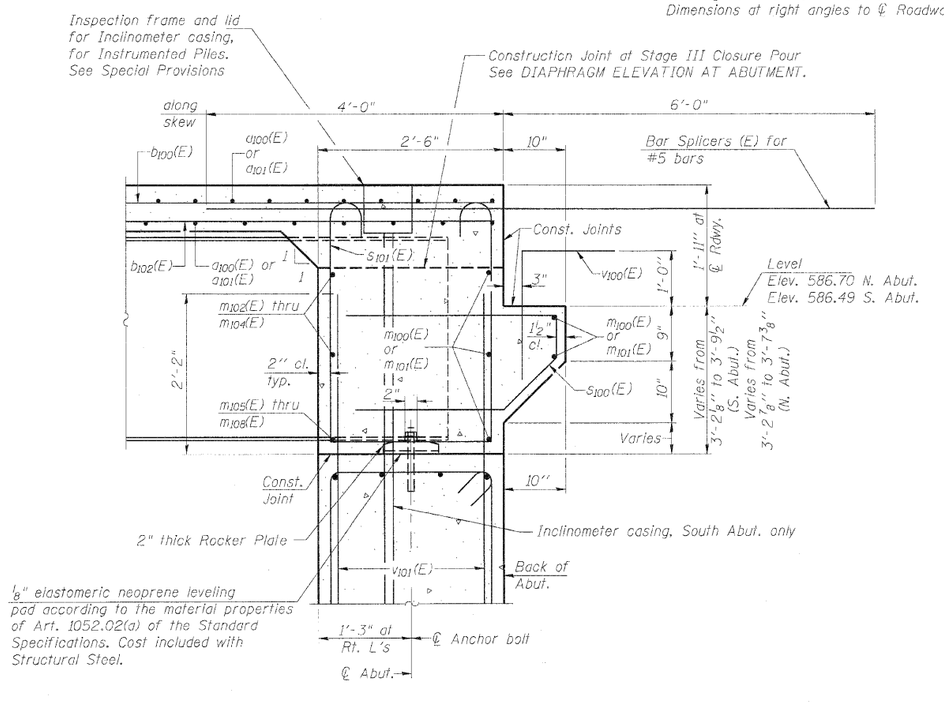

SECTION A-A

Dimensions at right angles to abutment, except as shown.

Notes:

Reinforcement bars in diaphragm are billed with superstructure on Sheet 18 of 50.

Concrete in diaphragm is included with Concrete Superstructure on Sheet 18 of 50.

For details of bars $s_{100}(E)$ & $s_{101}(E)$ see Sheet 18 of 50.

The $s_{100}(E)$ & $s_{101}(E)$ bars shall be placed parallel to the beams. Spacing for these bars shall be at right angles to the beams.

MIN. BAR LAP

#6 bar = 3'-4"

PROFESSIONAL DESIGN FIRM LICENSE #184-001084

HANSON
Hanson Professional Services Inc.

JOB NO. 05R1532A
DATE 07/23/10
SHEET NO. 19
50 SHEETS

F.A.I. RTE.	SECTION	COUNTY	TOTAL SHEETS	SHEET NO.
280	81-1(HB)R	Rock Island	503	152

CONTRACT NO. 64815

ILLINOIS | FED. AID PROJECT

INTEGRAL ABUTMENT DIAPHRAGM DETAILS - N.B.
STRUCTURE NUMBERS 081-0188 (S.B.) & 081-0189 (N.B.)

LAYOUT	AKR/FEN	04/05/10
DRAWN	MGM/JDN	07/21/10
REVIEWED	JKG/FEN	07/21/10

07/23/2010
c:\pwidm\workdb\rdt_detailed\mf382\081188-6-B16-D19-Diaph_Det_NB.dgn

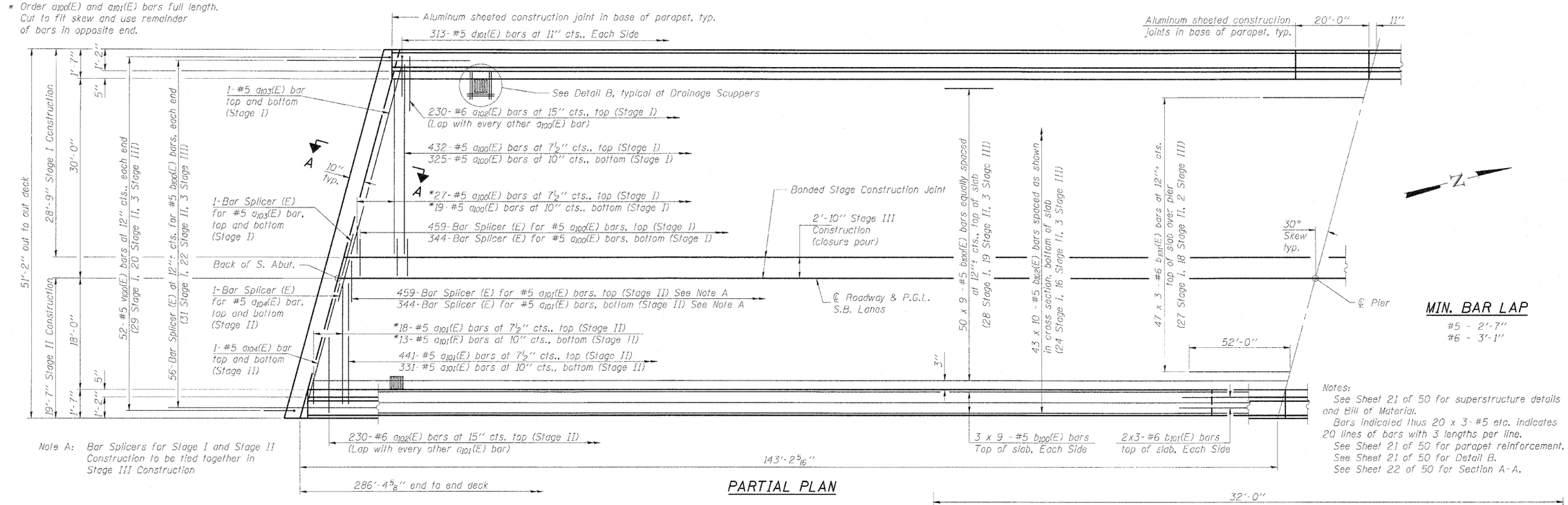

PROFESSIONAL DESIGN FIRM LICENSE #184-001084

HANSON
Hanson Professional Services Inc.

JOB NO. 05R1532A
DATE 07/23/10
SHEET NO. 20
50 SHEETS

SUPERSTRUCTURE - S.B.
STRUCTURE NUMBERS 081-0188 (S.B.) & 081-0189 (N.B.)

F.A.I. RTE.	SECTION	COUNTY	TOTAL SHEETS	SHEET NO.
280	81-1(HB)R	Rock Island	503	153

CONTRACT NO. 64815

ILLINOIS FED. AID PROJECT

LAYOUT	KRJ/FLN	04/05/10
DRAWN	MGM/JDN	07/21/10
REVIEWED	JKG/FLN	07/21/10

07/23/2010
c:\pwidot\workfolder\d0581532\design\Structure\Superstructure\S1.dgn

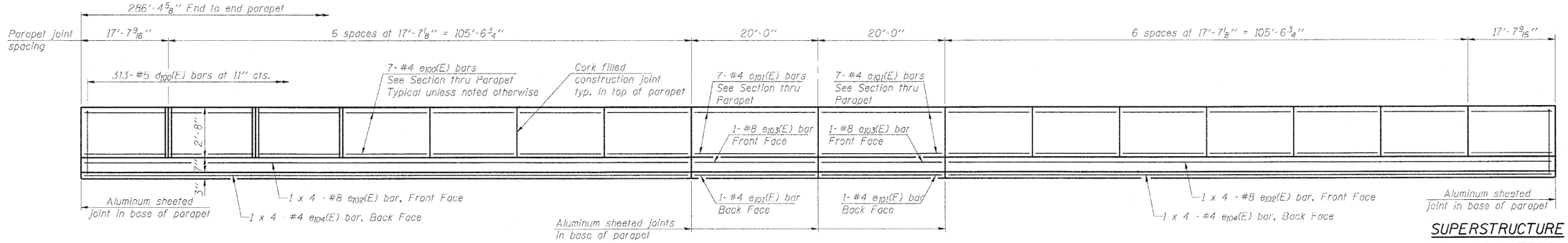

INSIDE ELEVATION OF PARAPET

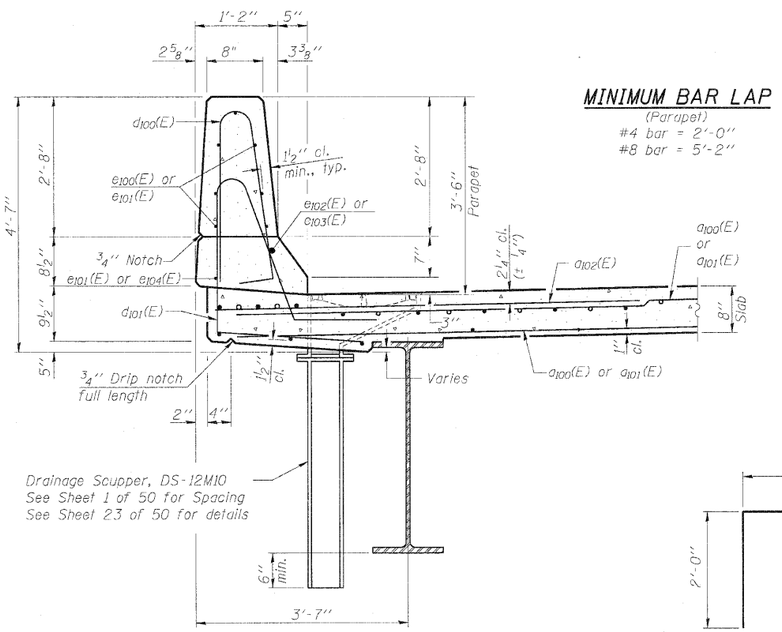

MINIMUM BAR LAP

(Parapet)
#4 bar = 2'-0"
#8 bar = 5'-2"

SECTION THRU PARAPET

Floor drains shall be located clear of all diaphragms

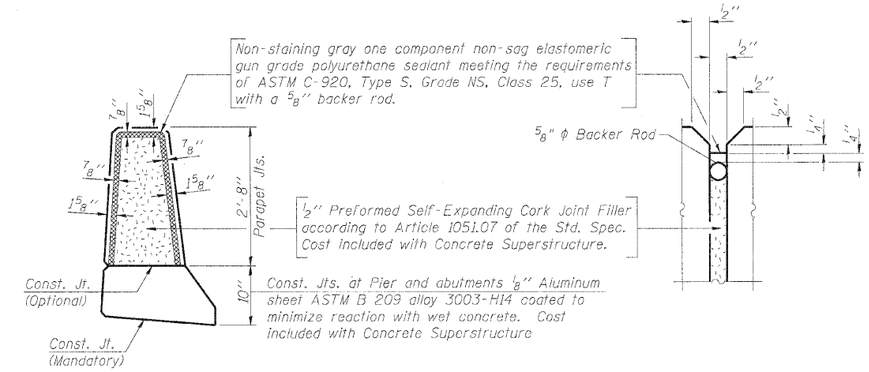

PARAPET JOINT DETAILS

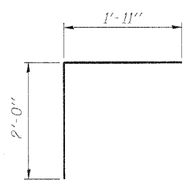

BAR v100(E)

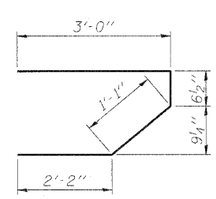

BAR s100(E)

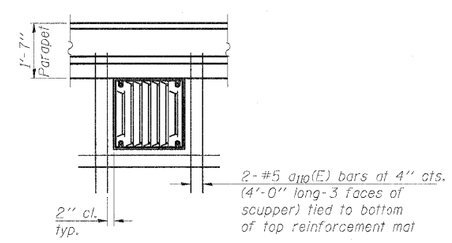

DETAIL B

Note:
Cut longitudinal reinforcement to clear drainage scuppers.

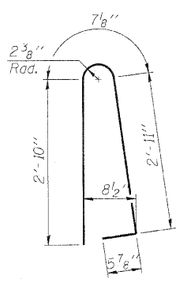

BAR d100(E)

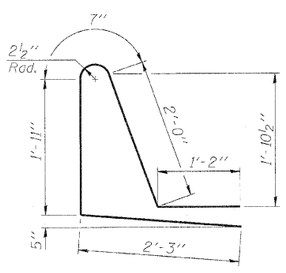

BAR d101(E)

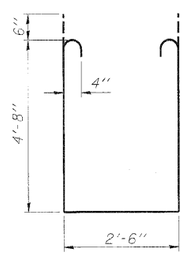

BAR s101(E)

SUPERSTRUCTURE BILL OF MATERIAL

Bar	No.	Size	Length	Shape
a100(E)	803	#5	28'-4"	
a101(E)	803	#5	19'-2"	
a102(E)	460	#6	6'-6"	
a103(E)	4	#5	32'-8"	
a104(E)	4	#5	22'-1"	
a110(E)	24	#5	4'-0"	
b100(E)	504	#5	34'-3"	
b101(E)	153	#6	37'-0"	
b102(E)	430	#5	31'-3"	
d100(E)	626	#5	6'-10"	
d101(E)	626	#5	7'-11"	
e100(E)	196	#4	17'-3"	
e101(E)	32	#4	19'-8"	
e102(E)	16	#8	34'-9"	
e103(E)	4	#8	19'-8"	
e104(E)	16	#4	32'-6"	
m100(E)	10	#6	32'-10"	
m101(E)	10	#6	22'-3"	
m102(E)	12	#6	9'-11"	
m103(E)	12	#6	11'-10"	
m104(E)	4	#6	10'-9"	
m105(E)	4	#6	3'-9"	
m106(E)	10	#6	8'-1"	
m107(E)	2	#6	3'-3"	
m108(E)	2	#6	4'-5"	
s100(E)	96	#5	6'-10"	
s101(E)	86	#4	12'-10"	
v100(E)	104	#5	3'-11"	
Reinforcement Bars, Epoxy Coated			Pound	102,770
Concrete Superstructure			Cu. Yds.	511.0

Bars indicated thus 1 x 4-#5 etc. indicates 1 line of bars with 4 lengths per line.

SUPERSTRUCTURE DETAILS - S.B.
STRUCTURE NUMBERS 081-0188 (S.B.) & 081-0189 (N.B.)

PROFESSIONAL DESIGN FIRM LICENSE #184-001084

HANSON
Hanson Professional Services Inc.

JOB NO. 05R1532A
DATE 07/23/10
SHEET NO. 21
50 SHEETS

F.A.I. RTE.	SECTION	COUNTY	TOTAL SHEETS	SHEET NO.
280	81-1(HB)R	Rock Island	503	154
		CONTRACT NO. 64815		
	ILLINOIS	FED. AID PROJECT		

LAYOUT	MBF/FIN	04/05/10
DRAWN	MSW/JBN	07/21/10
REVIEWED	JKR/FIN	07/21/10

07/23/2010
c:\pwidot\work\cds_cd_delete\mdl3638\D818648-648-5-023-Super Str_Dtl_SB.dgn

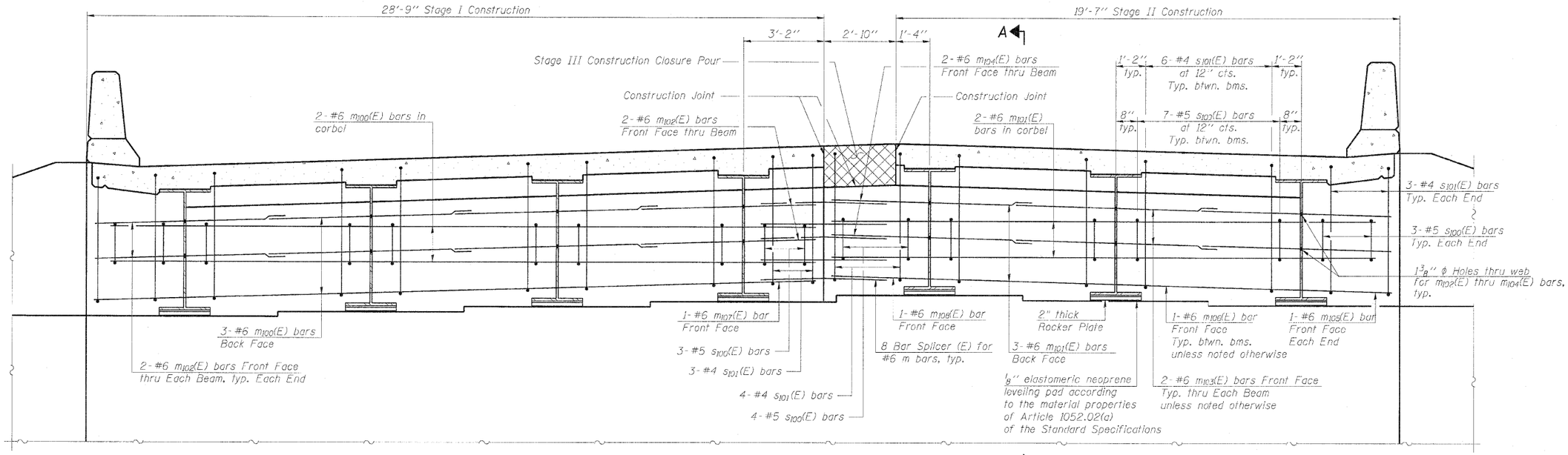

DIAPHRAGM ELEVATION AT ABUTMENT

(Looking North at North Abutment) (South Abutment similar)
Dimensions at right angles to ℄ Roadway

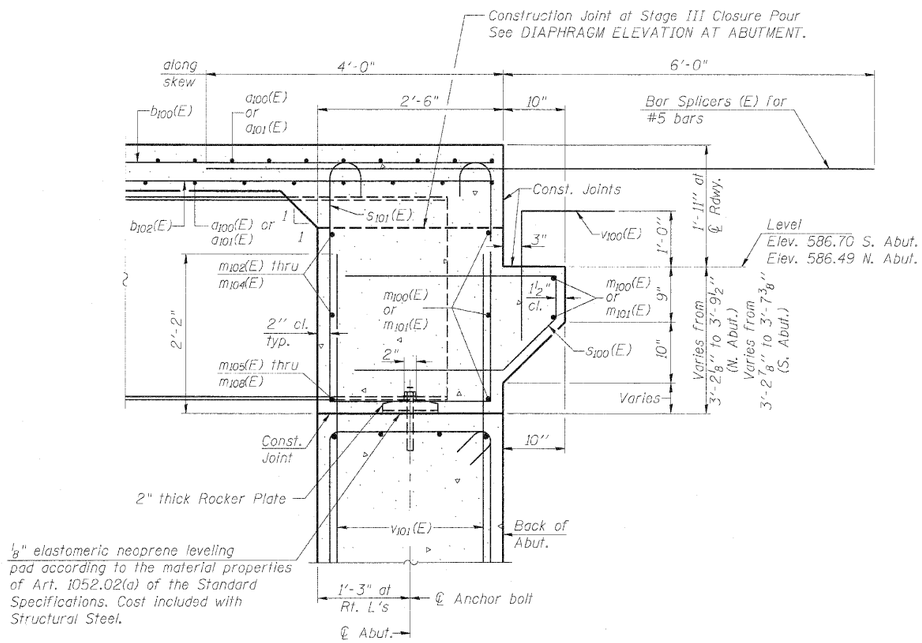

SECTION A-A

Dimensions at right angles to abutment, except as shown.

Notes:

Reinforcement bars in diaphragm are billed with superstructure on Sheet 21 of 50.

Concrete in diaphragm is included with Concrete Superstructure on Sheet 21 of 50.

For details of bars s100(E) & s101(E) see Sheet 21 of 50.

The s100(E) & s101(E) bars shall be placed parallel to the beams. Spacing for these bars shall be at right angles to the beams.

MIN. BAR LAP

#6 bar - 3'-4"

INTEGRAL ABUTMENT DIAPHRAGM DETAILS - S.B.

STRUCTURE NUMBERS 081-0188 (S.B.) & 081-0189 (N.B.)

PROFESSIONAL DESIGN FIRM LICENSE #184-001084

HANSON
Hanson Professional Services Inc.

JOB NO.	SHEET NO.	F.A.I. RTE.	SECTION	COUNTY	TOTAL SHEETS	SHEET NO.
05R1532A	22	280	81-1(HB)R	Rock Island	503	155
DATE 07/23/10	50 SHEETS			CONTRACT NO. 64815		
			ILLINOIS FED. AID PROJECT			

LAYOUT	JKG/FLN	04/05/10
DRAWN	MCW/JDM	07/21/10
REVIEWED	JKG/FLN	07/21/10

09:22:20:00
c:\pwidss_workdir\d_dgns\dms13693\D81088\64815-D22-Diaph-Det_SbAbm

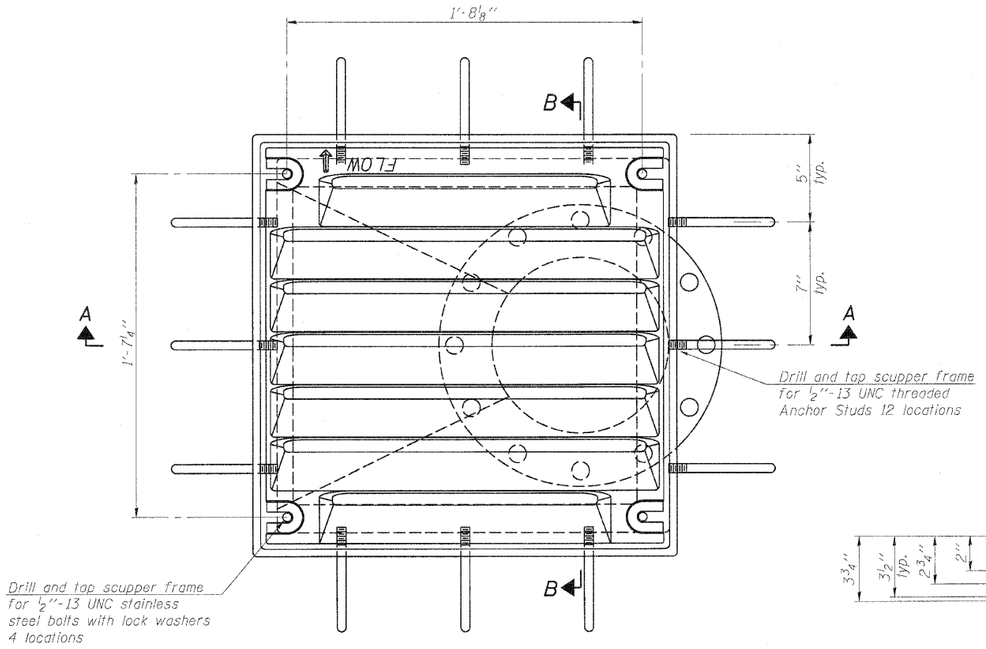

PLAN

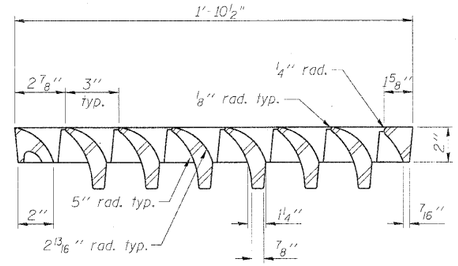

VANE GRATE DETAIL

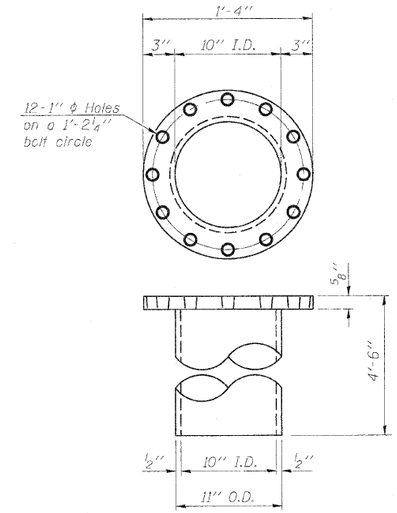

DOWNSPOUT

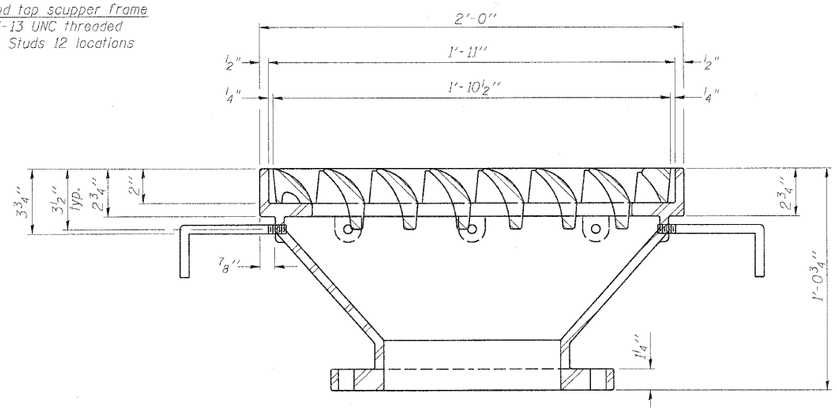

SECTION B-B

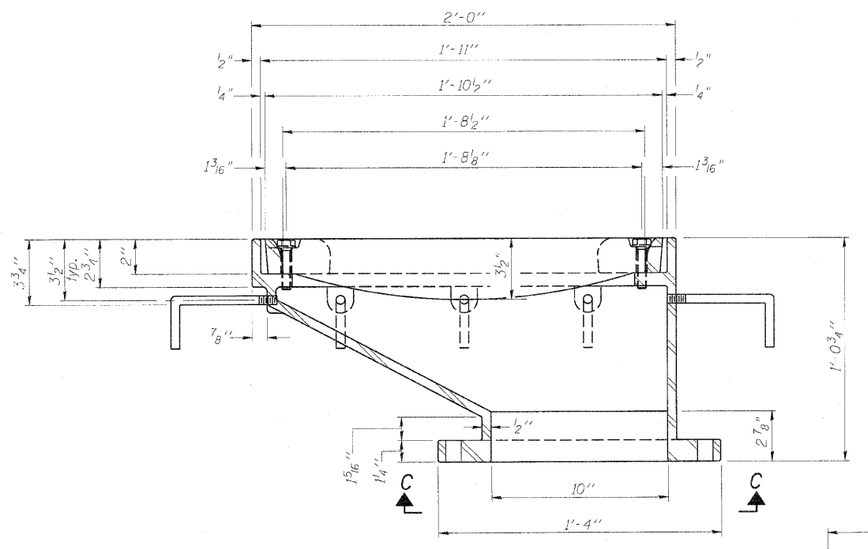

SECTION A-A

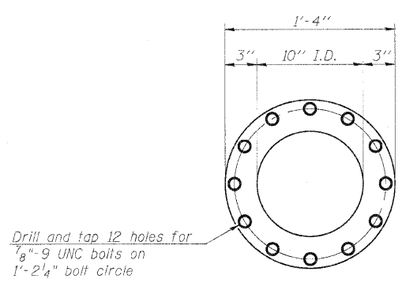

VIEW C-C

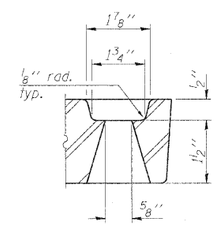

GRATE BOLT HOLE DETAIL

Notes:

All cast iron parts shall be gray iron conforming to the requirements of AASHTO M 105, Class 35B.

Bolts, anchor studs, washers and nuts shall conform to the requirements of ASTM A 307 and shall be galvanized according to AASHTO M 232.

All castings shall conform to the requirements of AASHTO M 306.

Downspouts located on the exterior side of a painted steel fascia beam shall be painted with the finish coat specified for the exterior side of the fascia beam.

As an alternate, bolts, anchor studs, washers and nuts may be stainless steel according to Article 1006.29(d) of the Standard Specifications.

Structural steel weldments of equal sections and of the same configuration may be substituted for the cast iron scupper frame. Fillet or full penetration welds shall be used for the weldments. Details shall be submitted to the Engineer for approval. Structural steel weldments shall not be substituted for the cast iron scupper grate. Structural steel frames and downspouts shall be galvanized according to AASHTO M111.

The Contractor shall take appropriate measures to assure that Protective Coat is not applied to the scupper.

Cost of the Grate, Frame, Downspout, Anchor Studs, Bolts, Washers and Nuts including complete installation of the scupper shall be paid for at the contract unit price each for Drainage Scupper, DS-12M10.

Alternate fiberglass downspout conforming to ASTM D 2996 with a short-time rupture strength hoop tensile stress of 30,000 psi min. may be used in lieu of the cast iron or steel equivalent.

BILL OF MATERIAL

ITEM	UNIT	QUANTITY
Drainage Scupper, DS-12M10	Each	8

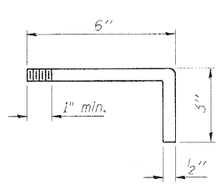

ANCHOR STUD DETAIL

DRAINAGE SCUPPERS, DS-12M10

STRUCTURE NUMBERS 081-0188 (S.B.) & 081-0189 (N.B.)

PROFESSIONAL DESIGN FIRM LICENSE #184-001084

HANSON

Hanson Professional Services Inc.

JOB NO.		F.A.I. RTE.	SECTION	COUNTY	TOTAL SHEETS	SHEET NO.
05R1532A	SHEET NO. 23	280	81-1(HB)R	Rock Island	503	156
DATE 07/23/10	50 SHEETS			CONTRACT NO. 64815		
			ILLINOIS	FED. AID PROJECT		

DS-12M10 11-1-09

LAYOUT	JKN/TLN	04/05/10
DRAWN	MGM/JDM	07/21/10
REVIEWED	JKN/TLN	07/21/10

07/22/2010

c:\pwidse.work\ds_not_deleted\usj\5528\DS8088-6685-023-Drainscupr.

Notes:
See Sheet 25 of 50 for Sections C-C & D-D and View E-E.
$a_{105}(E)$ thru $a_{108}(E)$ bar spacings measured along ℄ Rdwy.

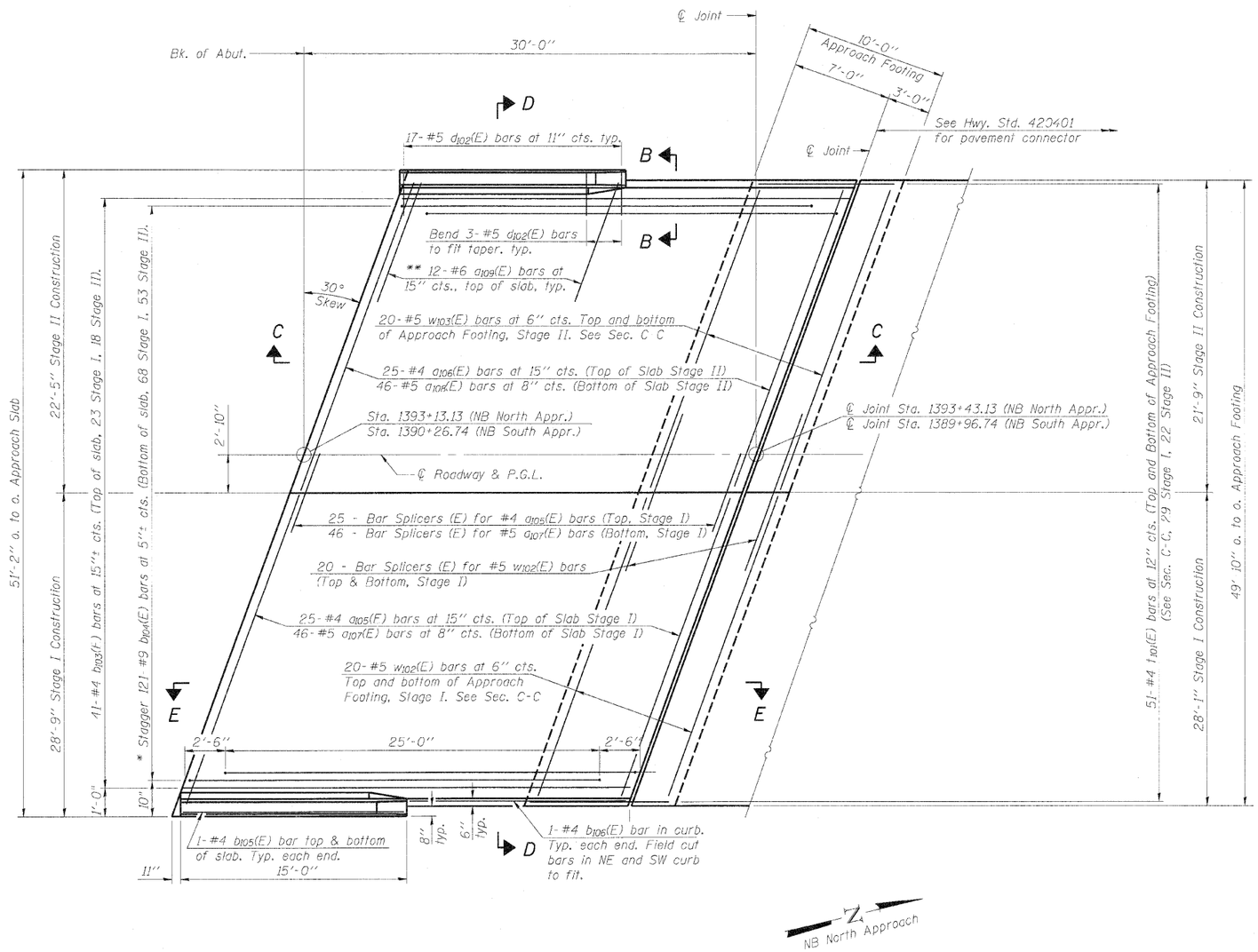

PLAN

(NB North Approach Shown, NB South Approach similar)

* Tilt #9 $b_{104}(E)$ bars as required to maintain clearance.
** Space between $a_{105}(E)$ or $a_{106}(E)$ bars, typ. each parapet.

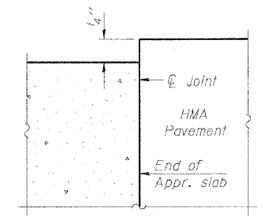

FLEXIBLE PAVEMENT

DETAIL A

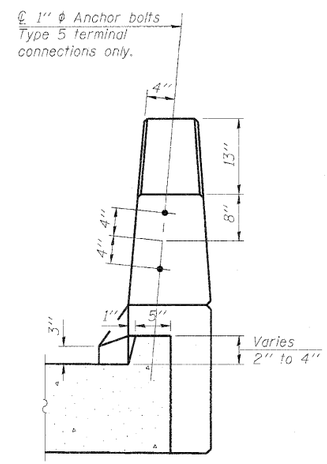

VIEW B-B

BRIDGE APPROACH SLAB DETAILS - N.B.
STRUCTURE NUMBERS 081-0188 (S.B.) & 081-0189 (N.B.)

PROFESSIONAL DESIGN FIRM LICENSE #184-001084

HANSON
Hanson Professional Services Inc.

JOB NO.	SHEET NO.	F.A.I. RTE.	SECTION	COUNTY	TOTAL SHEETS	SHEET NO.
05R1532A	SHEET NO. 24	280	81-1(HB)R	Rock Island	503	157
DATE 07/23/10	50 SHEETS			CONTRACT NO. 64815		
			ILLINOIS	FED. AID PROJECT		

LAYOUT	JKR/FLN	04/05/10
DRAWN	NCM/JDM	07/21/10
REVIEWED	JKU/FLN	07/21/10

07/23/2010
c:\pwidot_work\dot_rdl_development\35252\C80185-E4815-024-Appr_Slab-NB.dgn

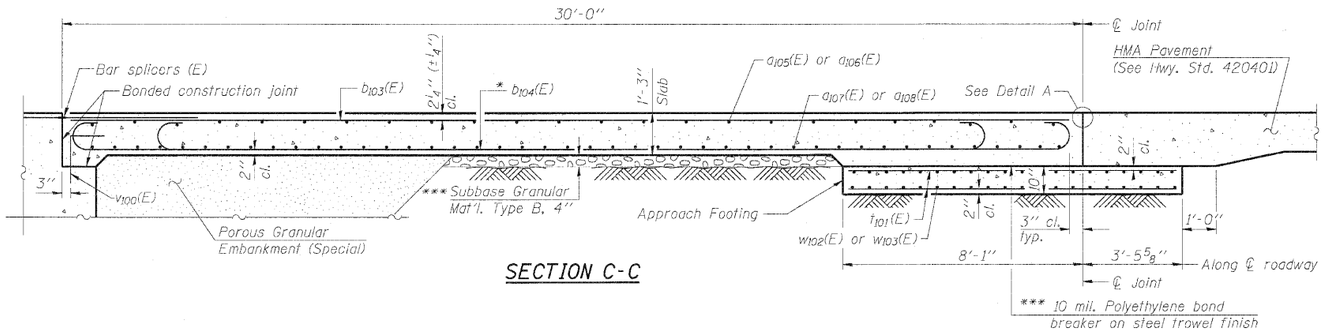

SECTION C-C

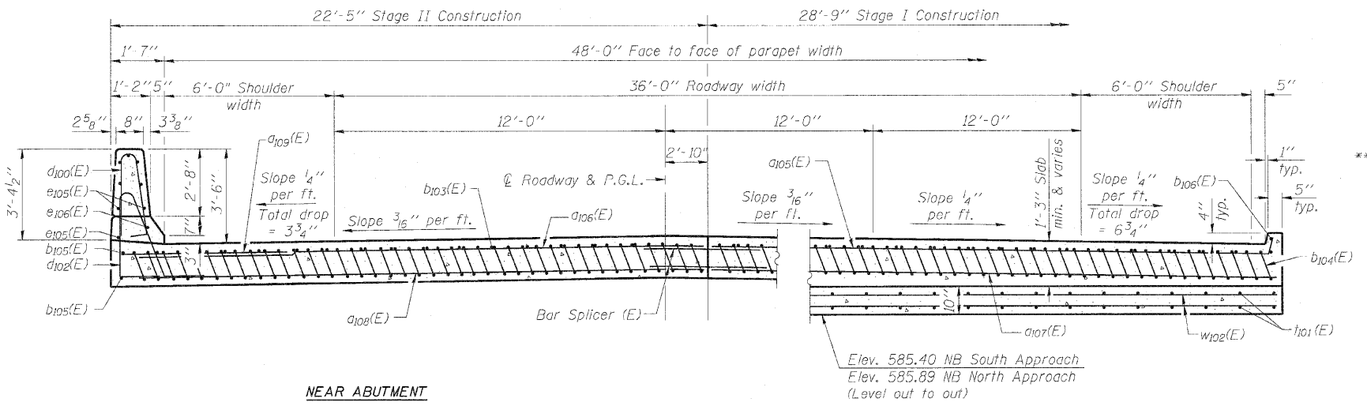

NEAR ABUTMENT

SECTION D-D

(See Plan for dimensions not shown)

AT APPROACH FOOTING

Notes:

See Sheet 24 of 50 for Detail A and View B-B.
Approach slab and parapet concrete shall be paid for as Concrete Superstructure.
Approach footing concrete shall be paid for as Concrete Structures.
Reinforcement shall be paid for as Reinforcement Bars, Epoxy Coated.
For v_{100}(E) bar details, see Sheet 18 of 50.
The approach footing maximum applied service bearing pressure (Qmax) = 2.0 ksf.
For bar splicer details, see Sheet 44 of 50.
Cost of excavation for approach footing included with Concrete Structures.
For Porous Granular Embankment (Special) and drainage treatment details, see Sheet 2 of 50.
For additional parapet details, see Sheet 18 of 50.

* Tilt #9 b_{104}(E) bars as required to maintain clearance.

*** Cost included with Concrete Superstructure.

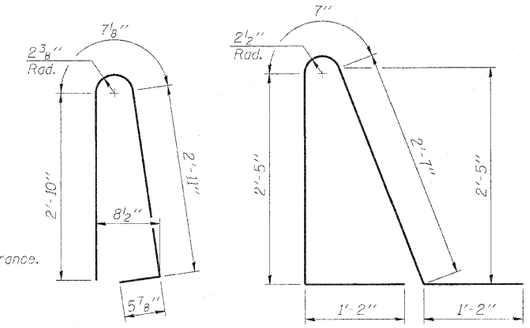

BAR d_{100}(E)

BAR d_{102}(E)

TWO APPROACHES
BILL OF MATERIAL

Bar	No.	Size	Length	Shape
a_{105}(E)	50	#4	32'-3"	
a_{106}(E)	50	#4	24'-11"	
a_{107}(E)	92	#5	32'-0"	
a_{108}(E)	92	#5	24'-8"	
a_{109}(E)	48	#6	6'-6"	
b_{103}(E)	82	#4	29'-8"	
b_{104}(E)	242	#9	29'-9"	
b_{105}(E)	8	#4	14'-8"	
b_{106}(E)	4	#4	15'-1"	
d_{100}(E)	68	#5	6'-10"	
d_{102}(E)	68	#5	7'-11"	
e_{105}(E)	32	#4	14'-8"	
e_{106}(E)	4	#8	14'-8"	
t_{101}(E)	204	#4	11'-2"	
w_{102}(E)	80	#5	32'-0"	
w_{103}(E)	80	#5	24'-8"	
Concrete Superstructure			Cu. Yd.	162.4
Concrete Structures			Cu. Yd.	35.6
Reinforcement Bars, Epoxy Coated			Pound	41,800

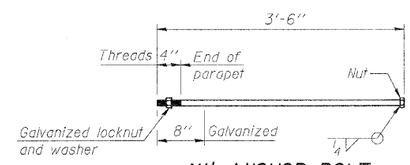

1"ϕ ANCHOR BOLT

(Cost included with Concrete Superstructure)

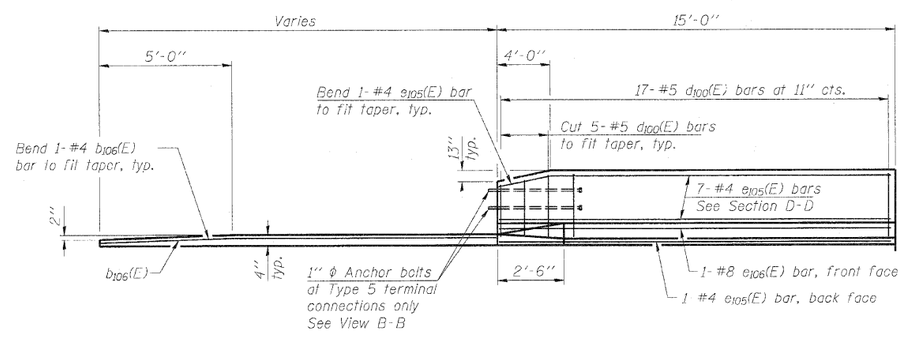

VIEW E-E

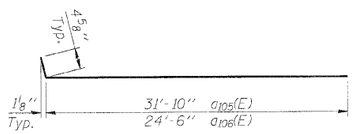

BAR a_{105}(E) & BAR a_{106}(E)

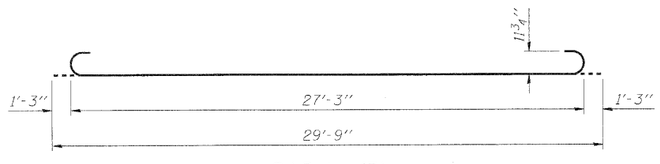

BAR b_{104}(E)

BRIDGE APPROACH SLAB DETAILS - N.B.
STRUCTURE NUMBERS 081-0188 (S.B.) & 081-0189 (N.B.)

PROFESSIONAL DESIGN FIRM LICENSE #184-001084

HANSON
Hanson Professional Services Inc.

JOB NO.	SHEET NO.	F.A.I. RTE.	SECTION	COUNTY	TOTAL SHEETS	SHEET NO.
05R1532A	SHEET NO. 25	280	81-1(HB)R	Rock Island	503	158
DATE 07/23/10	50 SHEETS			CONTRACT NO. 64815		
			ILLINOIS	FED. AID PROJECT		

07/22/2010
c:\pwidot\workfile\ not deleted\cmes\5092\05R1532B-64815-C25_Appr_Slab-NB-2.dgn

LAYOUT	J.KRAFCIK	04/05/10
DRAWN	M.DAVIDSON	07/22/10
REVIEWED	J.KRAFCIK	07/21/10

Notes:
See Sheet 27 of 50 for Sections C-C & D-D and View E-E.
$a_{105}(F)$ thru $a_{108}(E)$ bar spacings measured along ℄ Rdwy.

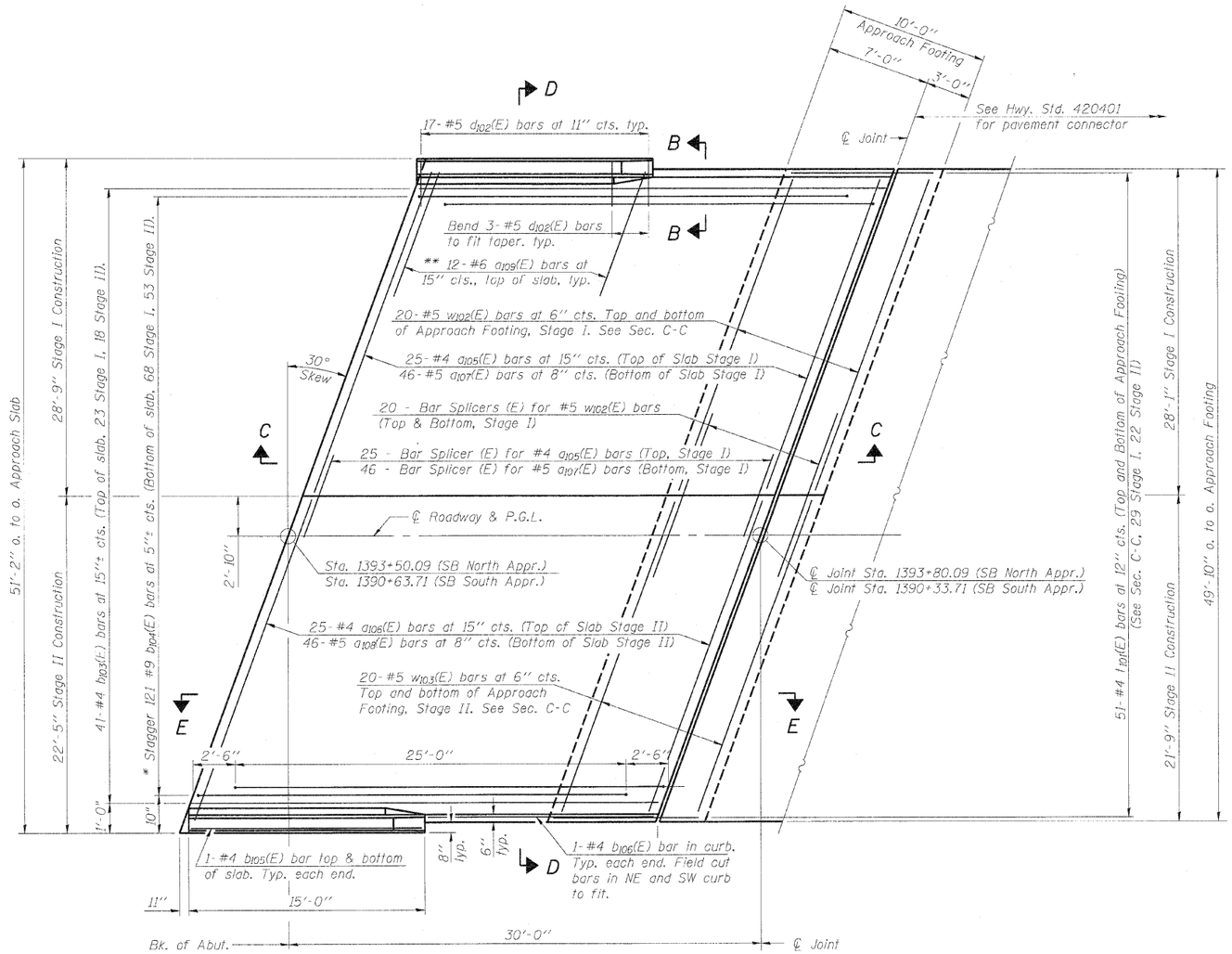

PLAN

(SB North Approach Shown, SB South Approach similar)

* Tilt #9 $b_{104}(E)$ bars as required to maintain clearance.
** Space between $a_{105}(E)$ or $a_{106}(E)$ bars, typ. each parapet.

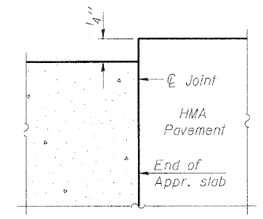

FLEXIBLE PAVEMENT

DETAIL A

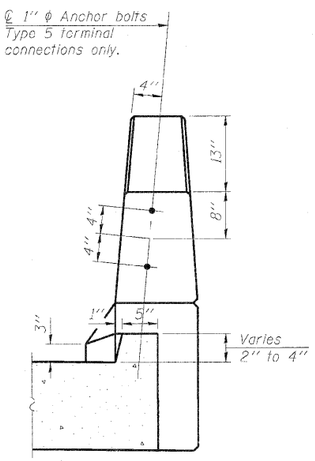

VIEW B-B

BRIDGE APPROACH SLAB DETAILS - S.B.
STRUCTURE NUMBERS 081-0188 (S.B.) & 081-0189 (N.B.)

PROFESSIONAL DESIGN FIRM LICENSE #184-001084

HANSON
Hanson Professional Services Inc.

JOB NO.	SHEET NO. 26	F.A.I. RTE.	SECTION	COUNTY	TOTAL SHEETS	SHEET NO.
05R1532A		280	81-1(HB)R	Rock Island	503	159
DATE 07/23/10	50 SHEETS	CONTRACT NO. 64815				
		ILLINOIS FED. AID PROJECT				

LAYOUT	JKR/TLN	07/05/10
DRAWN	MGM/JDM	07/21/10
REVIEWED	JKR/TLN	07/21/10

07/22/2010
c:\pwworks_not_delete\mnd365\D0180288-E465-026-Appr_Slab-SBsign

Notes:
See Sheet 26 of 50 for Detail A and View B-B.
Approach slab and parapet concrete shall be paid for as Concrete Superstructure.
Approach footing concrete shall be paid for as Concrete Structures.
Reinforcement shall be paid for as Reinforcement Bars, Epoxy Coated.
For $v_{100}(E)$ bar details, see Sheet 21 of 50.
The approach footing maximum applied service bearing pressure (Qmax) = 2.0 ksf.
For bar splicer details, see Sheet 44 of 50.
Cost of excavation for approach footing included with Concrete Structures.
For Porous Granular Embankment (Special) and drainage treatment details, see Sheet 2 of 50.
For additional parapet details, see Sheet 21 of 50.

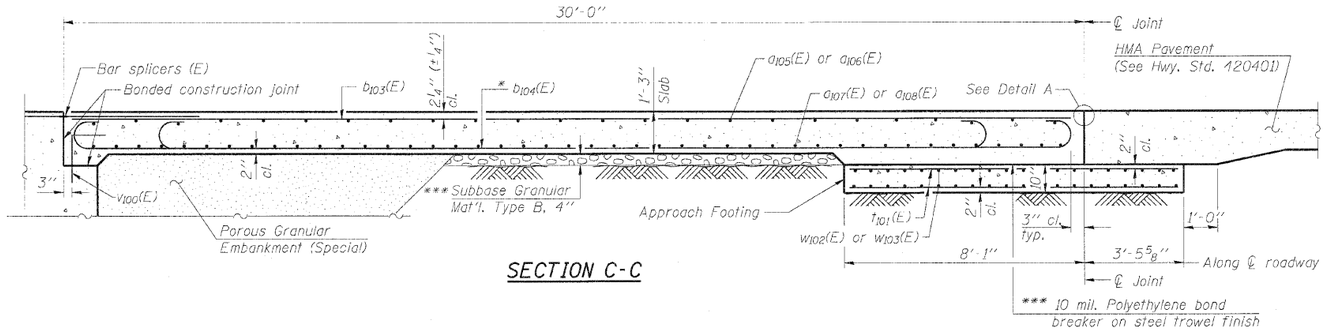

SECTION C-C

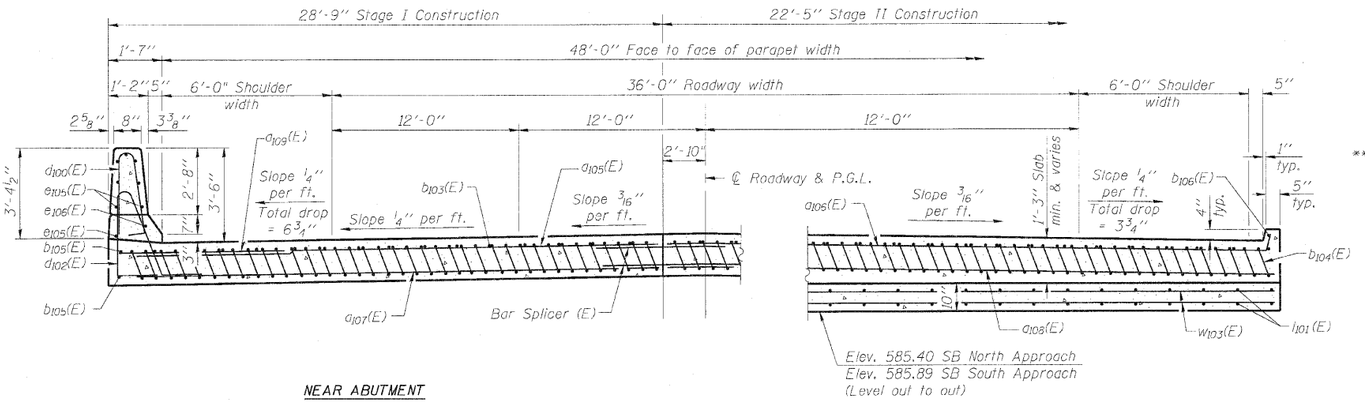

NEAR ABUTMENT

SECTION D-D
(See Plan for dimensions not shown)

AT APPROACH FOOTING

* Tilt #9 $b_{104}(E)$ bars as required to maintain clearance.

*** Cost included with Concrete Superstructure.

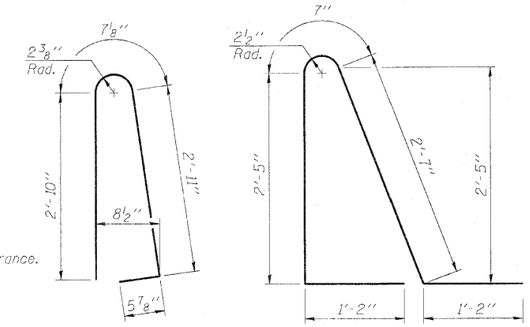

BAR $d_{100}(E)$

BAR $d_{102}(E)$

TWO APPROACHES
BILL OF MATERIAL

Bar	No.	Size	Length	Shape
$a_{105}(E)$	50	#4	32'-3"	
$a_{106}(E)$	50	#4	24'-11"	
$a_{107}(E)$	92	#5	32'-0"	
$a_{108}(E)$	92	#5	24'-8"	
$a_{109}(E)$	48	#6	6'-6"	
$b_{103}(E)$	82	#4	29'-8"	
$b_{104}(E)$	242	#9	29'-9"	
$b_{105}(E)$	8	#4	14'-8"	
$b_{106}(E)$	4	#4	15'-1"	
$d_{100}(E)$	68	#5	6'-10"	
$d_{102}(E)$	68	#5	7'-11"	
$e_{105}(E)$	32	#4	14'-8"	
$e_{106}(E)$	4	#8	14'-8"	
$t_{101}(E)$	204	#4	11'-2"	
$w_{102}(E)$	80	#5	32'-0"	
$w_{103}(E)$	80	#5	24'-8"	
Concrete Superstructure			Cu. Yd.	162.4
Concrete Structures			Cu. Yd.	35.6
Reinforcement Bars, Epoxy Coated			Pound	41,800

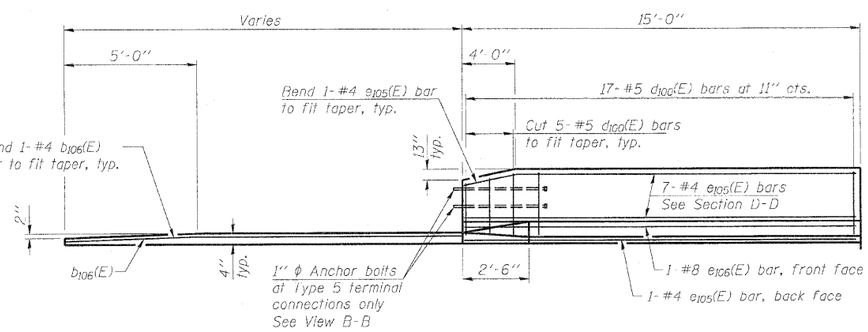

VIEW E-E

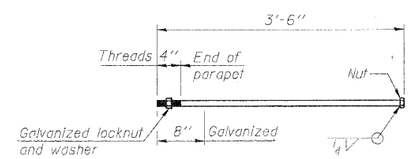

1"ϕ ANCHOR BOLT
(Cost included with Concrete Superstructure)

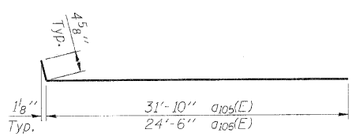

BAR $a_{105}(E)$ & BAR $a_{106}(E)$

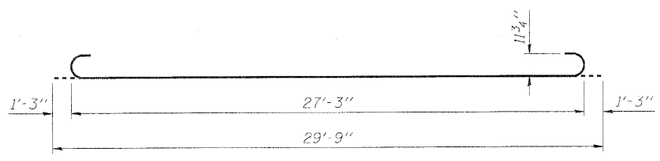

BAR $b_{104}(E)$

BRIDGE APPROACH SLAB DETAILS - S.B.
STRUCTURE NUMBERS 081-0188 (S.B.) & 081-0189 (N.B.)

PROFFSSIONAL DESIGN FIRM LICENSE #184-001084

HANSON
Hanson Professional Services Inc.

JOB NO.	SHEET NO. 27	F.A.I. RTE.	SECTION	COUNTY	TOTAL SHEETS	SHEET NO.
05R1532A		280	81-1(HB)R	Rock Island	503	160
DATE 07/23/10	50 SHEETS			CONTRACT NO. 64815		
				ILLINOIS FED. AID PROJECT		

LAYOUT	JKR/FLN	04/05/10
DRAWN	MDM/JDM	07/21/10
REVIEWED	JKR/FLN	07/21/10

07/22/2010
c:\pwidse...work\dts_not_deleted\d1532R\081083-6-6815-027-Appr_Slab-SB-2.dgn

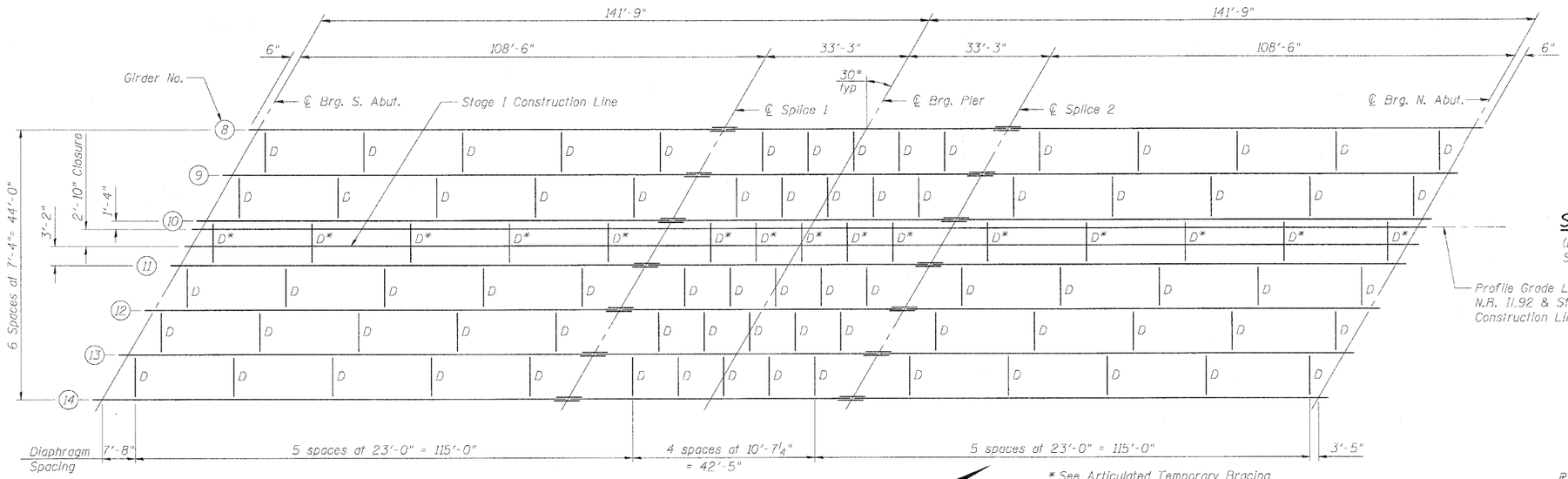

* See Articulated Temporary Bracing Detail on Sheet 30 of 30.

FRAMING PLAN

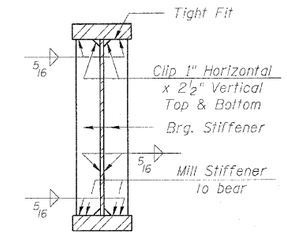

SECTION THRU BEARING STIFFENER

(Bearing Stiffeners at abutments and pier)
See Girder Elevation for dimensions of bearing stiffeners

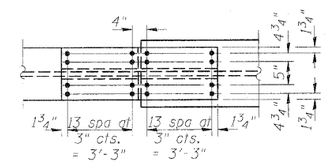

TOP FLANGE

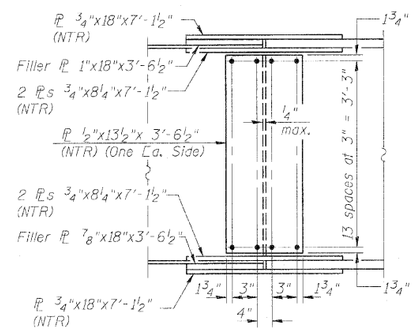

WEB

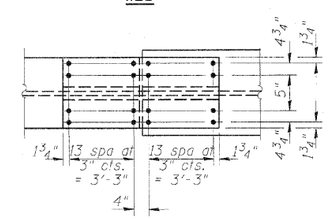

BOTTOM FLANGE

SPLICE #1 & #2 DETAIL

Splice #1 Looking West
Splice #2 Looking East

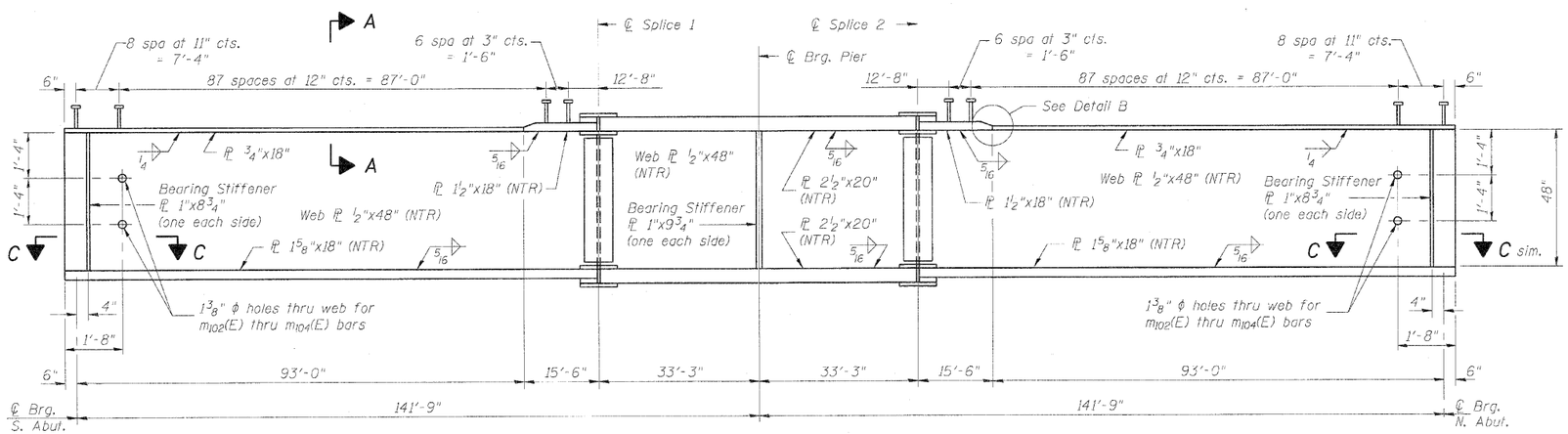

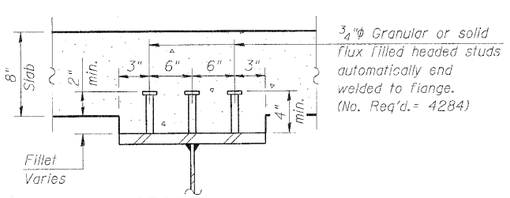

SECTION A-A

GIRDER ELEVATION

(Looking West)

Notes:

All beams and splice plates, except filler plates, shall be AASHTO M270 Grade 50.

All diaphragms shall be installed as steel is erected and secured with erection pins and bolts except as otherwise noted. Individual diaphragms at supports may be temporarily disconnected to install bearing anchor rods.

Load carrying components designated "NTR" shall conform to the requirements of Notch Toughness, Zone 2.

See Sheet 30 of 50 for Diaphragm.

See Sheet 30 of 50 for Section C-C.

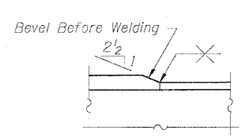

DETAIL B

PROFESSIONAL DESIGN FIRM LICENSE #184-001084

HANSON
Hanson Professional Services Inc.

STRUCTURAL STEEL - N.B.
STRUCTURE NUMBERS 081-0188 (S.B.) & 081-0189 (N.B.)

JOB NO.		F.A.I. RTE.	SECTION	COUNTY	TOTAL SHEETS	SHEET NO.
05R1532A	SHEET NO. 28	280	81-1(HB)R	Rock Island	503	161
DATE 07/23/10	50 SHEETS			CONTRACT NO. 64815		
			ILLINOIS FED. AID PROJECT			

LAYOUT	KEVIN	04/05/10
DRAWN	KEVIN, DM	07/21/10
REVIEWED	KEVIN	07/21/10

07/22/2010
c:\pwidot\workdir_net_deleted\HSPC\081088 & 081-0189 Str Sht_NB.dgn

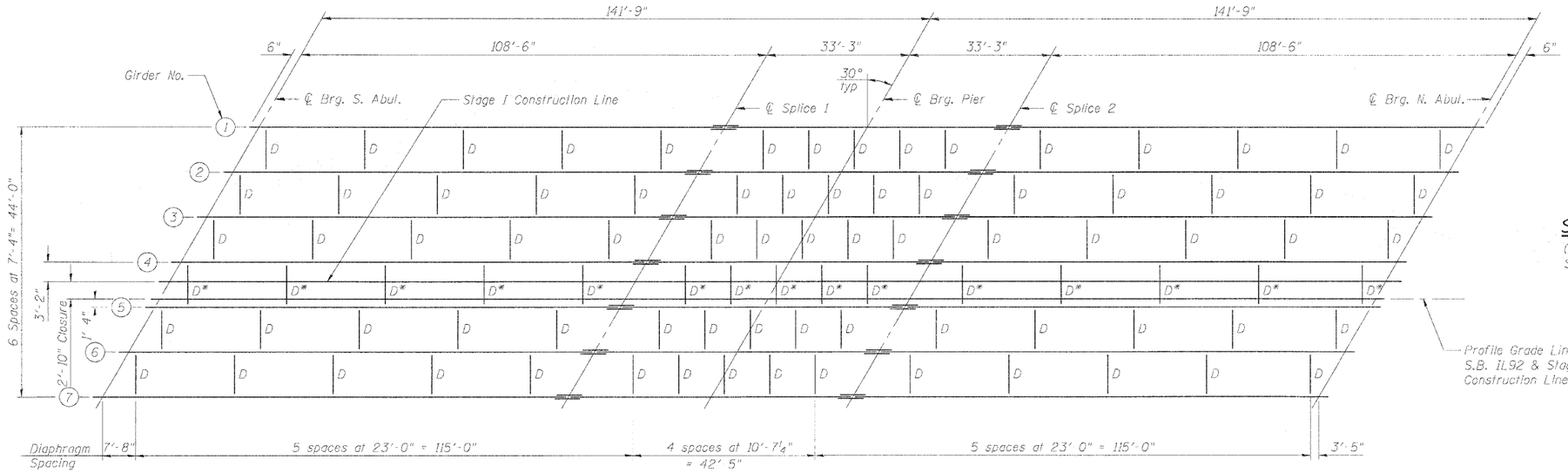

FRAMING PLAN

* See Articulated Temporary Bracing Detail on Sheet 30 of 30.

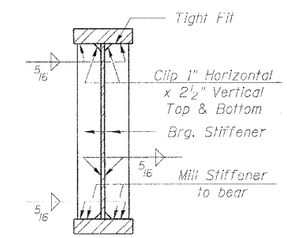

SECTION THRU BEARING STIFFENER

(Bearing Stiffeners at abutments and pier)
See Girder Elevation for dimensions of bearing stiffeners

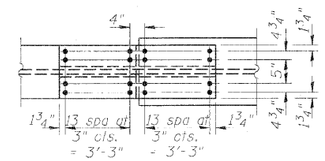

TOP FLANGE

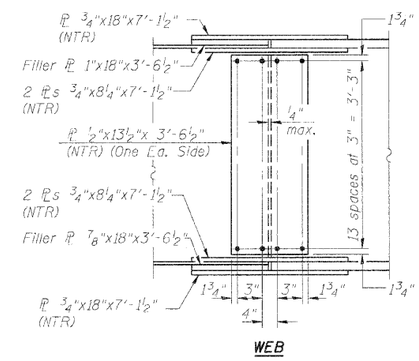

WEB

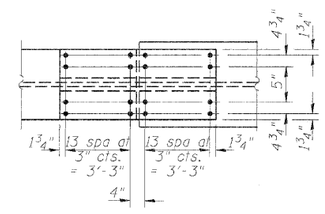

BOTTOM FLANGE

SPLICE #1 & #2 DETAIL

Splice #1 Looking West
Splice #2 Looking East

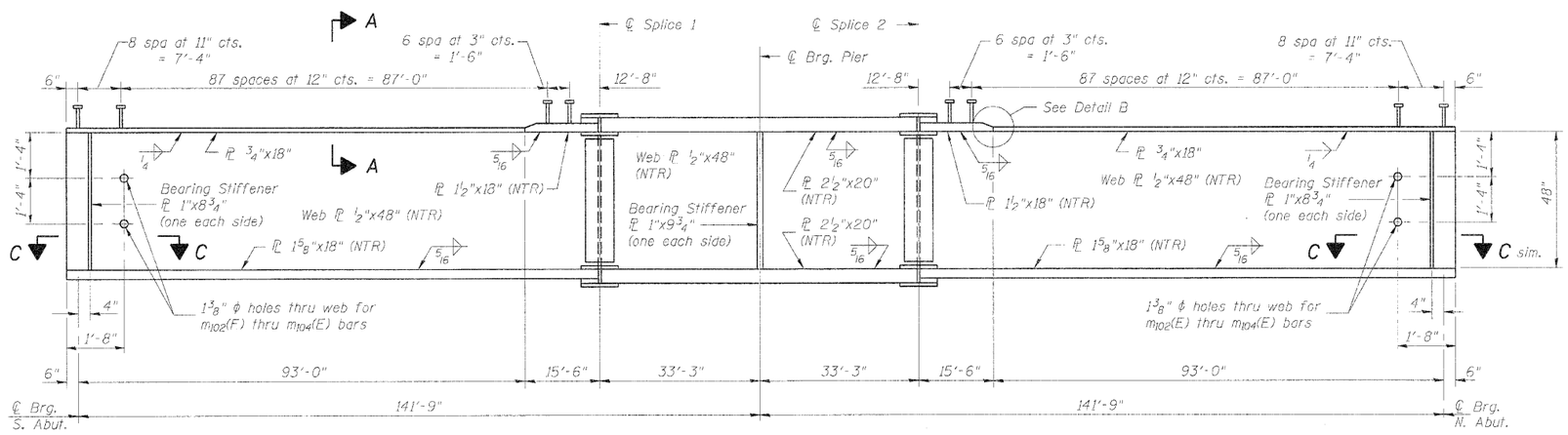

GIRDER ELEVATION

(Looking West)

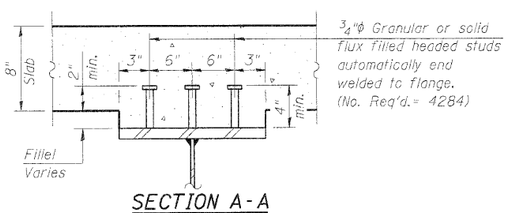

SECTION A-A

Notes:

All beams and splice plates, except filler plates, shall be AASHTO M270 Grade 50.

All diaphragms shall be installed as steel is erected and secured with erection pins and bolts except as otherwise noted. Individual diaphragms at supports may be temporarily disconnected to install bearing anchor rods.

Load carrying components designated "NTR" shall conform to the requirements of Notch Toughness, Zone 2.

See Sheet 30 of 50 for Diaphragm.

See Sheet 30 of 50 for Section C-C.

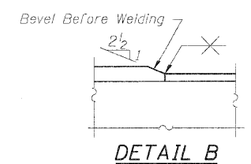

DETAIL B

PROFESSIONAL DESIGN FIRM LICENSE #184-001084

HANSON
Hanson Professional Services Inc.

JOB NO. 05R1532A	SHEET NO. 29	F.A.I. RTE.	SECTION	COUNTY	TOTAL SHEETS / SHEET NO.
DATE 07/23/10	50 SHEETS	280	81-1(HB)R	Rock Island	503 / 162
				CONTRACT NO. 64815	
			ILLINOIS	FED. AID PROJECT	

STRUCTURAL STEEL - S.B.
STRUCTURE NUMBERS 081-0188 (S.B.) & 081-0189 (N.B.)

LAYOUT	KR/FLN	06/05/10
DRAWN	WCM/JDM	07/21/10
REVISED	KJV/LAN	07/21/10

07/23/2010
c:\pwworking\dot_ildot\dot0188\D1532A\D1532A_SH29.dgn

TOP OF WEB ELEVATIONS (For fabrication only)

	Girder 1	Girder 2	Girder 3	Girder 4	Girder 5	Girder 6	Girder 7	Girder 8	Girder 9	Girder 10	Girder 11	Girder 12	Girder 13	Girder 14
℄ Brg. S. Abut.	587.39	587.53	587.66	587.76	587.81	587.68	587.52	587.42	587.53	587.62	587.52	587.37	587.18	587.00
℄ Splice 1	587.49	587.64	587.79	587.91	587.99	587.87	587.73	587.70	587.83	587.94	587.86	587.73	587.56	587.40
℄ Pier	587.44	587.60	587.76	587.89	587.96	587.85	587.72	587.72	587.85	587.96	587.89	587.76	587.60	587.44
℄ Splice 2	587.40	587.56	587.73	587.86	587.94	587.83	587.70	587.73	587.87	587.99	587.91	587.79	587.64	587.49
℄ Brg. N. Abut.	587.00	587.18	587.37	587.52	587.62	587.53	587.42	587.52	587.68	587.81	587.76	587.66	587.53	587.39

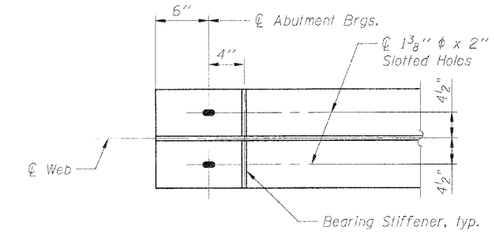

SECTION C-C

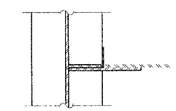

SECTION B-B

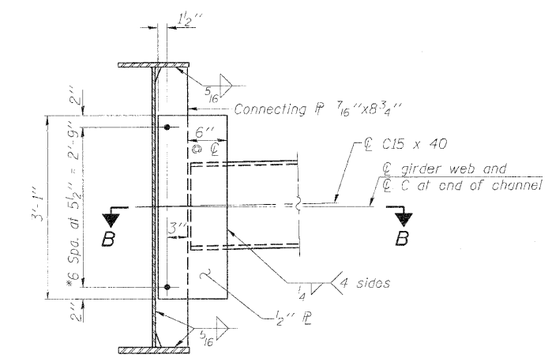

INTERIOR DIAPHRAGM D

(180 Required)

Note:
Two hardened washers required for each set of oversized holes.
* 3/4" ϕ HS bolts, 15/16" ϕ holes
Alternate channels C15x50 are permitted to facilitate material acquisition. Calculated weight of structural steel is based on C15x40 sections. The alternate, if utilized, shall be provided at no extra cost to the contract.

INTERIOR GIRDER MOMENT TABLE			
		0.4 Sp. 1 or 0.6 Sp. 2	Pier
I_s	(in^4)	28,286	68,416
$I_c(n)$	(in^4)	72,052	-
$I_c(3n)$	(in^4)	50,992	-
S_s	(in^3)	1437	2582
$S_c(n)$	(in^3)	1876	-
$S_c(3n)$	(in^3)	1733	-
Z	(in^3)	-	-
w	(k/')	1.11	1.77
Mw	('k)	1285	4921
sw	(k/')	0.49	-
$M_s w$	('k)	619	-
M_L	('k)	1240	1395
M_{IM}	('k)	232	262
$\frac{5}{3}[M_L + I]$	('k)	2454	2761
M_a	('k)	5704	9986
* M_u	('k)	8127	-
f_s w non-comp	(ksi)	10.73	22.87
f_s w (comp)	(ksi)	4.49	-
f_s $\frac{5}{3}[M_L + M_I]$	(ksi)	15.70	12.83
f_s (Overload)	(ksi)	30.92	35.70
** f_s (Total)	(ksi)	-	46.42
VR	(k)	65	-

* Compact section
** Braced non-compact and partially braced section

INTERIOR GIRDER REACTION TABLE			
		Abut.	Pier
R_w	(k)	78.7	296.2
R_L	(k)	48.9	92.9
R_I	(k)	9.2	17.4
R_{Total}	(k)	136.8	406.5

I_s, S_s: Non-composite moment of inertia and section modulus of the steel section used for computing f_s (Total and Overload) due to non-composite dead loads ($in.^4$ and $in.^3$).

$I_c(n)$, $S_c(n)$: Composite moment of inertia and section modulus of the steel and deck based upon the modular ratio, "n", used for computing f_s (Total and Overload) due to short-term composite live loads ($in.^4$ and $in.^3$).

$I_c(3n)$, $S_c(3n)$: Composite moment of inertia and section modulus of the steel and deck based upon 3 times the modular ratio, "3n", used for computing f_s (Total and Overload) due to long-term composite (superimposed) dead loads ($in.^4$ and $in.^3$).

Z: Plastic Section Modulus of the steel section in non-composite areas ($in.^3$).

w: Un-factored non-composite dead load (kips/ft.).

Mw: Un-factored moment due to non-composite dead load (kip ft.).

sw: Un-factored long-term composite (superimposed) dead load (kips/ft.)

$M_s w$: Un-factored moment due to long-term composite (superimposed) dead load (kip-ft.).

M_L: Un-factored live load moment (kip-ft.).

M_I: Un-factored moment due to impact (kip-ft.).

M_a: Factored design moment (kip-ft.).
$1.3\ [\ Mw + M_s w + \frac{5}{3}\ (M_L + M_I)]$

M_u: Compact composite moment capacity according to AASHTO LFD 10.50.1.1 or compact non-composite moment capacity according to AASHTO LFD 10.48.1 (kip-ft.).

f_s (Overload): Sum of stresses as computed from the moments below (ksi).
$Mw + M_s w + \frac{5}{3}\ (M_L + M_I)$

f_s (Total): Sum of stresses as computed from the moments below on non-compact section (ksi).
$1.3\ [Mw + M_s w + \frac{5}{3}\ (M_L + M_I)]$

VR: Maximum L + impact shear range within the composite portion of the span for stud shear connector design (kips).

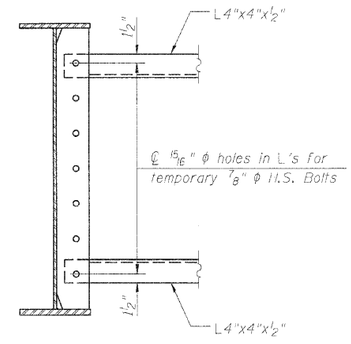

ARTICULATED TEMPORARY BRACING

Install bracing during Stage II steel erection. After Stage II deck pour, remove Articulated Temporary Bracing and replace with permanent bracing. Permanent bracing must be in place prior to Closure Pour. Cost incidental to F & E Structural Steel Bridge No. 6.

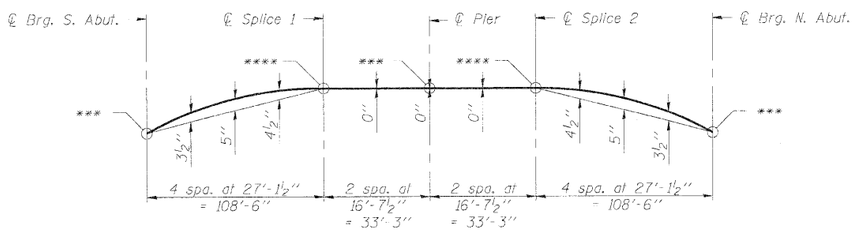

CAMBER DIAGRAM

*** See Table for Final Top of Web Elevation at abutment and piers.
**** Theoretical Top of Web Elevations before dead load deflections.

STRUCTURAL STEEL DETAILS
STRUCTURE NUMBERS 081-0188 (S.B.) & 081-0189 (N.B.)

PROFESSIONAL DESIGN FIRM LICENSE #184-001084

HANSON
Hanson Professional Services Inc.

JOB NO.	SHEET NO. 30	F.A.I. RTE.	SECTION	COUNTY	TOTAL SHEETS	SHEET NO.
05R1532A	50 SHEETS	280	81-1(HB)R	Rock Island	503	163
DATE 07/23/10		CONTRACT NO. 64815				
		ILLINOIS FED. AID PROJECT				

LAYOUT	JKR/FLN	04/05/10
DRAWN	MDW/JDM	07/21/10
REVIEWED	JKR/FLN	07/21/10

07-22-2010
c:\pwworking\d0\d1532\P0081884\R15-030-STR_S11_Det.dgn

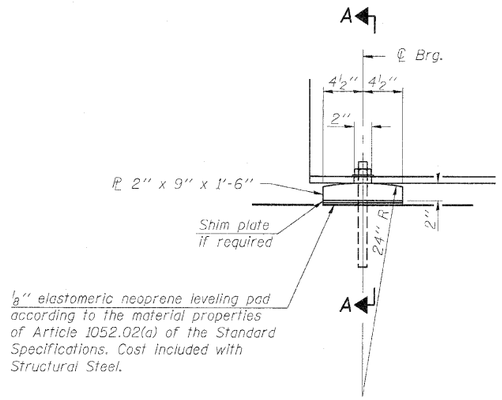

ELEVATION AT ABUTMENTS

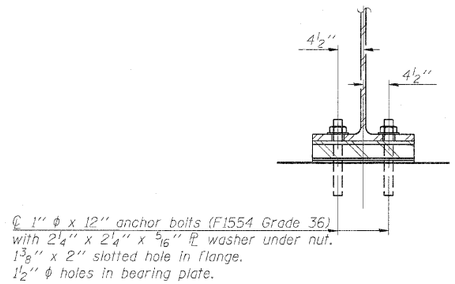

SECTION A-A

FIXED BEARING

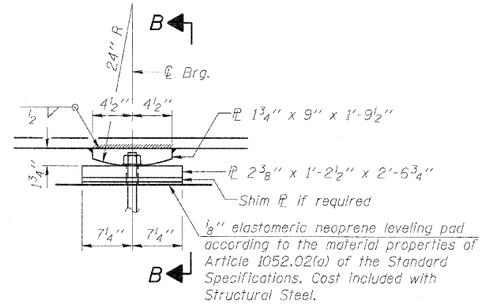

ELEVATION AT PIERS

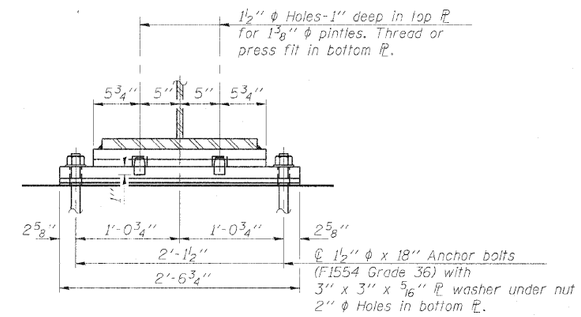

SECTION B-B

FIXED BEARING

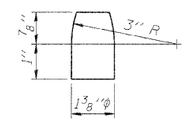

PINTLE

Notes:

Anchor bolts shall be ASTM F1554 all-thread (or an Engineer-approved alternate material) of the grade(s) and diameter(s) specified. ASTM A307 Grade C anchor bolts may be used in lieu of ASTM F1554 Grade 36 (Fy=36ksi). The corresponding specified grade of AASHTO M314 anchor bolts may be used in lieu of ASTM F1554.

Anchor bolts at fixed bearings may be either cast in place or installed in holes drilled after the supported member is in place.

Drilled and set anchor bolts shall be installed according to Article 521.06 of the Standard Specifications.

Contractor shall provide steel shim(s) as required beneath Girder 5 at South Abutment (Southbound Bridge) to result in an elevation difference between top of Girder 5 and top of Girder 4 of 5/8" (Girder 5 is higher) and Girder 10 at the North Abutment (Northbound Bridge) to result in an elevation difference between top of Girder 10 and Girder 11 of 5/8" (Girder 10 is higher). Total estimated shim height = 5/8". (Contractor to field verify). Shim plate(s) shall be the full dimension of the bottom bearing plate. Cost of shim(s) in included with Furnishing and Erecting Structrual Steel Bridge No. 6.

The structural steel plates of the Bearing Assembly shall conform to the requirements of AASHTO M 270 Grade 50.

Two ⅛ in. adjusting shims shall be provided for each bearing in addiion to all other plates or shims and placed as shown on bearing details.

BILL OF MATERIAL

Item	Unit	Total
Anchor Bolts, 1"	Each	56
Anchor Bolts, 1½"	Each	28

BEARING DETAILS

STRUCTURE NUMBERS 081-0188 (S.B.) & 081-0189 (N.B.)

PROFESSIONAL DESIGN FIRM LICENSE #184-001084

HANSON

Hanson Professional Services Inc.

JOB NO.	SHEET NO. 31	F.A.I. RTE.	SECTION	COUNTY	TOTAL SHEETS	SHEET NO.
05R1532A	50 SHEETS	280	81-1(HB)R	Rock Island	503	164
DATE 07/23/10		CONTRACT NO. 64815				
		ILLINOIS FED. AID PROJECT				

LAYOUT	JKU/FLN	06/05/10
DRAWN	MGU/JBM	07/21/10
REVIEWED	JKR/FLN	07/21/10

07/23/2010
c:\pwworking\ind_jobhelp\ind35\jobs\D8\D8-64815-03-bngplate15.dgn

Note: Pour steps monolithically with cap.

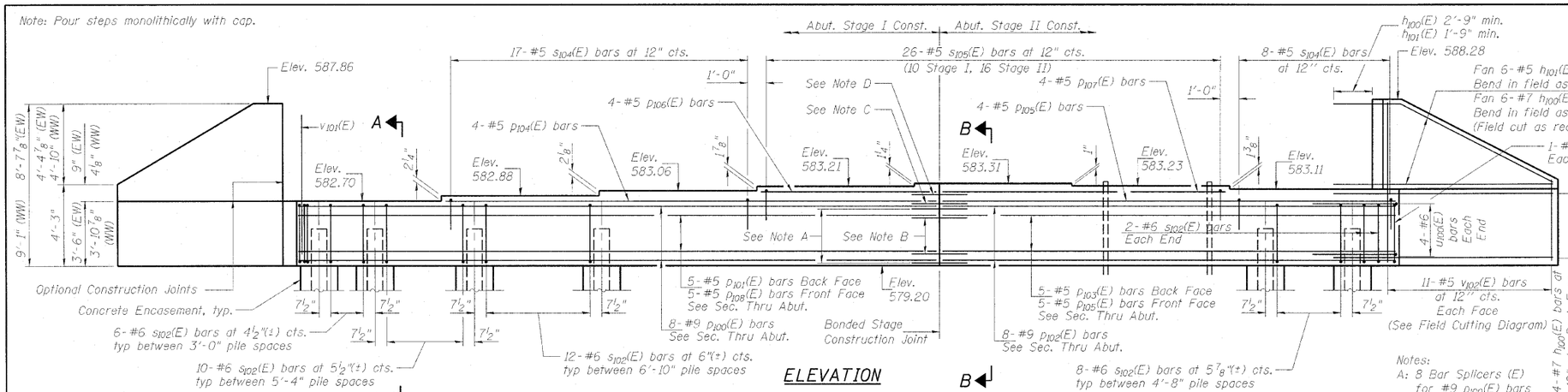

ELEVATION

Notes:
A: 8 Bar Splicers (E) for #9 p_{100}(E) bars
B: 5 Bar Splicers (E) for #5 p_{101}(E) bars
5 Bar Splicers (E) for #5 p_{108}(E) bars
C: 4 Bar Splicers (E) for #5 p_{104}(E) bars
D: 4 Bar Splicers (E) for #5 p_{106}(E) bars

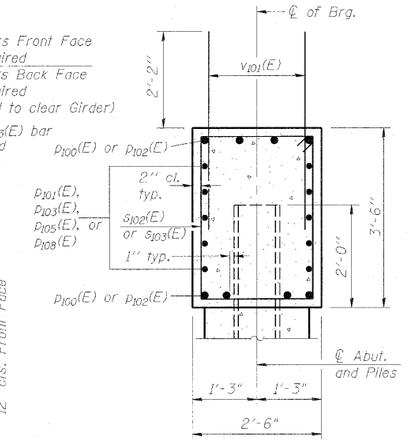

SECTION A-A
SEC. THRU ABUT.

(Dimensions at Right Angles)

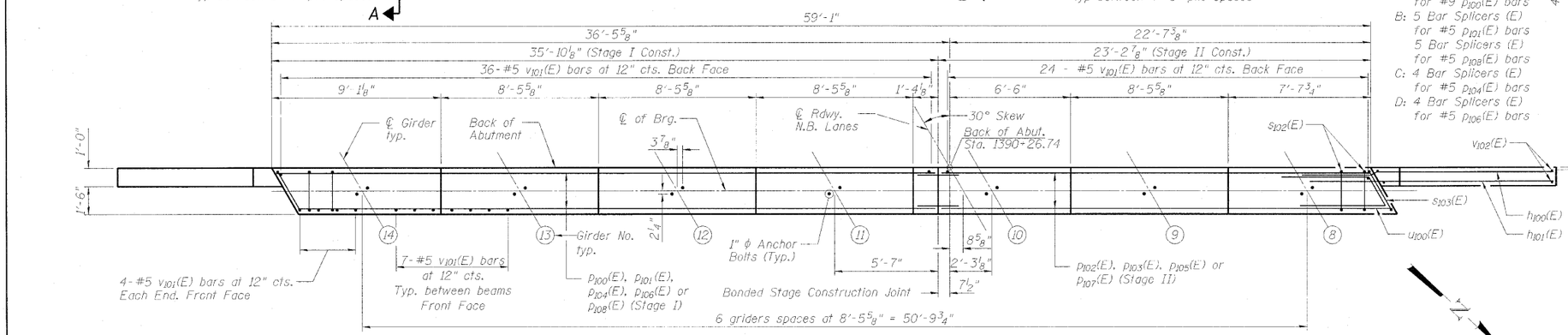

PLAN - TOP VIEW

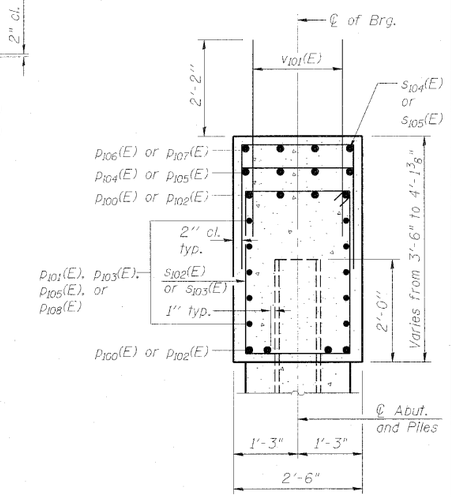

SECTION B-B
SEC. THRU ABUT.

(Dimensions at Right Angles)

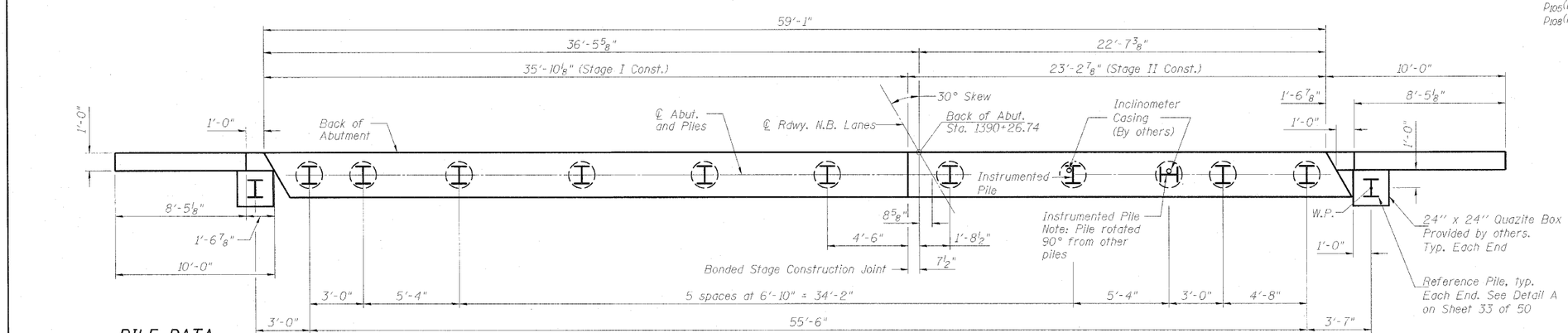

PLAN -PILE CAP

PILE DATA

Type: HP12x53
Nominal Required Bearing: 420K
Allowable Resistance Available: 140K
Est. Length: 58'
No. Production Piles: 10
No. Test Piles: 1
No. Reference Piles: 2

SOUTH ABUTMENT - N.B.
STRUCTURE NUMBERS 081-0188 (S.B.) & 081-0189 (N.B.)

PROFESSIONAL DESIGN FIRM LICENSE #184-001084

HANSON
Hanson Professional Services Inc.

JOB NO.	SHEET NO.	F.A.I. RTE.	SECTION	COUNTY	TOTAL SHEETS	SHEET NO.
05R1532A	32	280	81-1(HB)R	Rock Island	503	165
DATE 05/21/10	50 SHEETS	CONTRACT NO. 64815				
		ILLINOIS FED. AID PROJECT				

LAYOUT	JKR/TLN	04/05/10
DRAWN	MGM/JRM	07/21/10
REVIEWED	JKR/TLN	07/21/10

09-09-2010
c:\pwidot\workfiles\d09_04_jreeves\mos\5632\050\9285-6485-5325-5_Abut_JR5.dgn

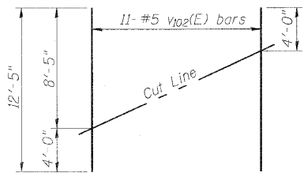

FIELD CUTTING DIAGRAM

Order v102(E) full length. Cut as shown and use remainder of bars in opposite face.

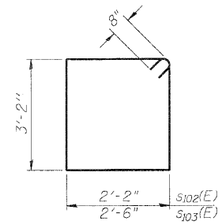

BARS s102(E) & s103(E)

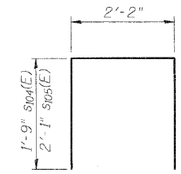

BARS s104(E) & s105(E)

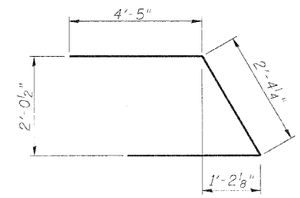

BAR u100(E)

BILL OF MATERIAL

	Bar	No.	Size	Length	Shape
*	h100(E)	20	#7	13'-9"	
*	h101(E)	20	#5	12'-9"	
*	p100(E)	8	#9	35'-5"	
	p101(E)	5	#5	35'-5"	
*	p102(E)	8	#9	24'-3"	
	p103(E)	5	#5	23'-0"	
	p104(E)	4	#5	26'-6"	
*	p105(E)	9	#5	24'-3"	
	p106(E)	4	#5	9'-7"	
	p107(E)	4	#5	15'-4"	
	p108(E)	5	#5	34'-2"	
	s102(E)	104	#6	12'-0"	
	s103(E)	2	#6	12'-8"	
	s104(E)	25	#5	5'-8"	
	s105(E)	26	#5	6'-4"	
	u100(E)	8	#6	11'-3"	
	v101(E)	110	#5	4'-4"	
	v102(E)	22	#5	12'-5"	
	Structure Excavation		Cu. Yd.	40	
	Concrete Structures		Cu. Yd.	26.2	
	Reinforcement Bars, Epoxy Coated		Pound	6,530	
	Furnishing Steel Piles HP12x53		Foot	696	
	Driving Piles		Foot	696	
	Test Pile Steel HP12x53		Each	1	
	Concrete Encasement		Cu. Yd.	2.5	

* Field cut bars as required to fit.
For details of Bar Splicers, see Sheet 44 of 50.
For details of piles and Concrete Encasement, see Sheet 45 of 50.

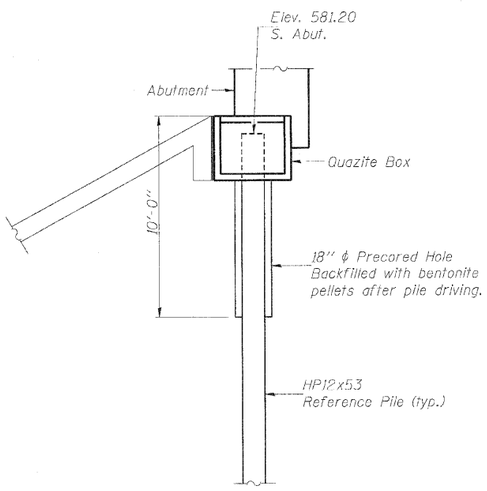

DETAIL A

See Special Provision for Instrumented Piles.

PROFESSIONAL DESIGN FIRM LICENSE #184-001084

HANSON
Hanson Professional Services Inc.

JOB NO. 05R1532A
DATE 07/23/10

SHEET NO. 33
50 SHEETS

SOUTH ABUTMENT DETAILS - N.B.
STRUCTURE NUMBERS 081-0188 (S.B.) & 081-0189 (N.B.)

F.A.I. RTE.	SECTION	COUNTY	TOTAL SHEETS	SHEET NO.
280	81-1(HB)R	Rock Island	503	166
		CONTRACT NO. 64815		
	ILLINOIS	FED. AID PROJECT		

LAYOUT JGK/FLN 04/05/10
DRAWN WCM/GM 07/21/10
REVIEWED JGK/FLN 07/21/10

07-23-2010
c:\pwidot\work\ab_not_deleted\dist\5639\R1532\081-0188-E-BRS-03.3-S_Abut_NB_Det.dgn

Note: Pour steps monolithically with cap.

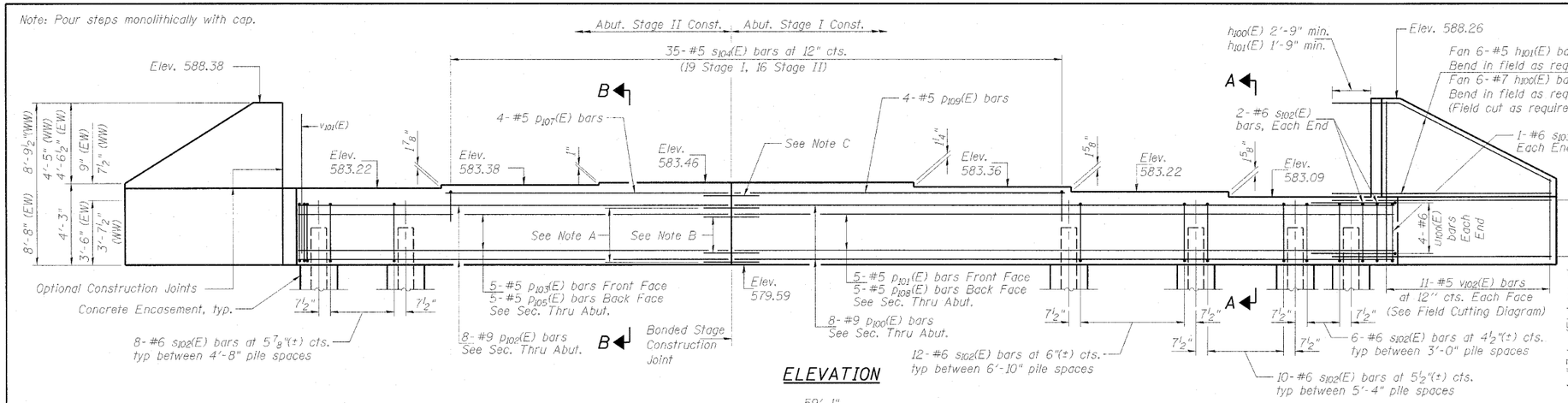

ELEVATION

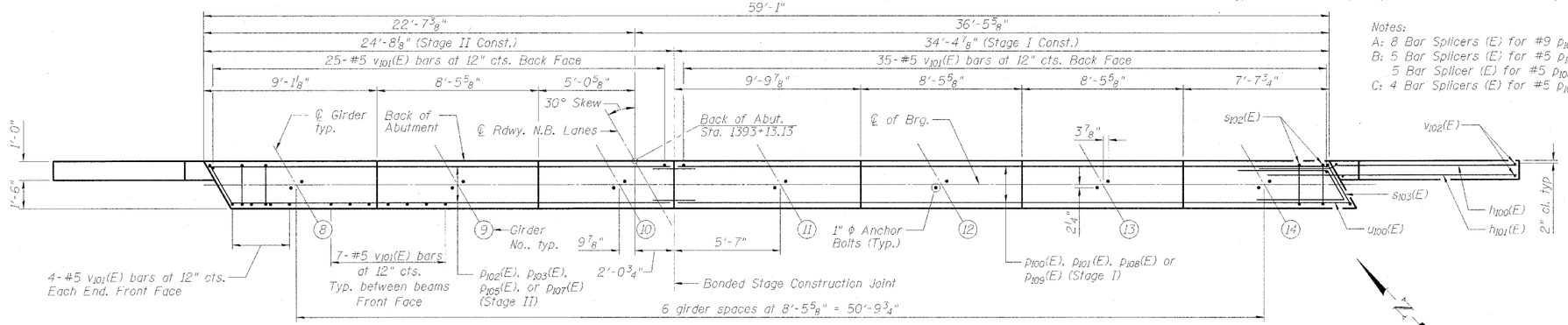

PLAN - TOP VIEW

Notes:
A: 8 Bar Splicers (E) for #9 p100(E) bars
B: 5 Bar Splicers (E) for #5 p101(E) bars and 5 Bar Splicer (E) for #5 p108(E) bars
C: 4 Bar Splicers (E) for #5 p109(E) bars

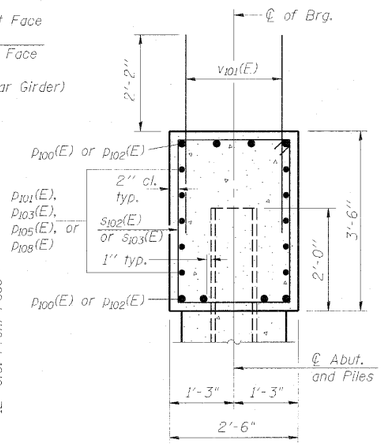

SECTION A-A
SEC. THRU ABUT.
(Dimensions at Right Angles)

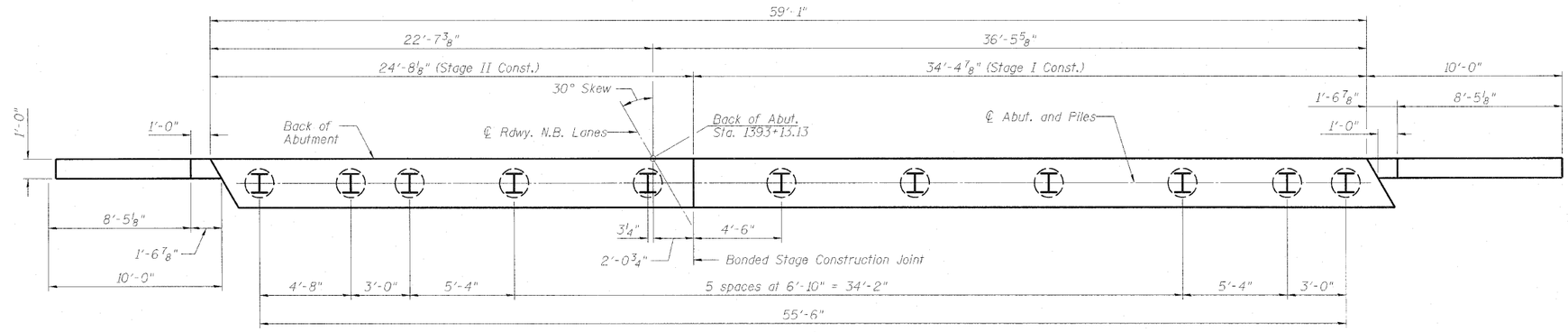

PLAN -PILE CAP

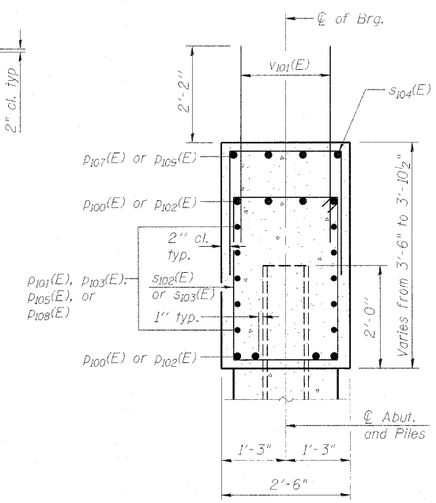

SECTION B-B
SEC. THRU ABUT.
(Dimensions at Right Angles)

PILE DATA

Type: HP12x53
Nominal Required Bearing: 420K
Allowable Resistance Available: 140K
Est. Length: 52'
No. Production Piles: 10
No. Test Piles: 1

NORTH ABUTMENT - N.B.
STRUCTURE NUMBERS 081-0188 (S.B.) & 081-0189 (N.B.)

PROFESSIONAL DESIGN FIRM LICENSE #184-001084

HANSON
Hanson Professional Services Inc.

JOB NO. 05R1532A
DATE 05/21/10
SHEET NO. 34
50 SHEETS

F.A.I. RTE.	SECTION	COUNTY	TOTAL SHEETS	SHEET NO.
280	81-1(HB)R	Rock Island	503	167
		CONTRACT NO. 64815		
		ILLINOIS FED. AID PROJECT		

LAYOUT	JRO/FLN	04/06/10
DRAWN	KCW/JDM	07/21/10
REVIEWED	JRO/FLN	07/21/10

09-29-2010
c:\pwworking\kcw_nd_landfill\d0766815\03H-N_Abut_N10.dgn

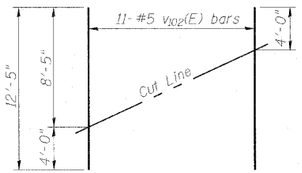

FIELD CUTTING DIAGRAM

Order $v_{102}(E)$ full length. Cut as shown and use remainder of bars in opposite face.

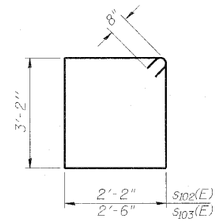

BARS $s_{102}(E)$ & $s_{103}(E)$

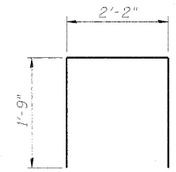

BAR $s_{104}(E)$

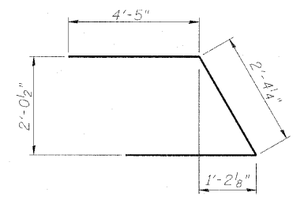

BAR $u_{100}(E)$

BILL OF MATERIAL

	Bar	No.	Size	Length	Shape
*	$h_{100}(E)$	20	#7	13'-9"	
*	$h_{101}(E)$	20	#5	12'-9"	
*	$p_{100}(E)$	8	#9	35'-5"	
	$p_{101}(E)$	5	#5	35'-5"	
*	$p_{102}(E)$	8	#9	24'-3"	
	$p_{103}(E)$	5	#5	23'-0"	
	$p_{105}(E)$	5	#5	24'-3"	
	$p_{107}(E)$	4	#5	15'-4"	
	$p_{108}(E)$	5	#5	34'-2"	
	$p_{109}(E)$	4	#5	18'-0"	
	$s_{102}(E)$	104	#6	12'-0"	
	$s_{103}(E)$	2	#6	12'-8"	
	$s_{104}(E)$	35	#5	5'-8"	
	$u_{100}(E)$	8	#6	11'-3"	
	$v_{101}(E)$	110	#5	4'-4"	
	$v_{102}(E)$	22	#5	12'-5"	
	Structure Excavation			Cu. Yd.	33
	Concrete Structures			Cu. Yd.	25.3
	Reinforcement Bars, Epoxy Coated			Pound	6,240
	Furnishing Steel Piles HP12x53			Foot	520
	Driving Piles			Foot	520
	Test Pile Steel HP12x53			Each	1
	Concrete Encasement			Cu. Yd.	2.5

* Field cut bars as required to fit.
For details of Bar Splicers, see Sheet 44 of 50.
For details of piles and Concrete Encasement, see Sheet 45 of 50.

PROFESSIONAL DESIGN FIRM LICENSE #184-001084

HANSON
Hanson Professional Services Inc.

JOB NO. 05R1532A
DATE 05/21/10

SHEET NO. 35
50 SHEETS

NORTH ABUTMENT DETAILS - N.B.
STRUCTURE NUMBERS 081-0188 (S.B.) & 081-0189 (N.B.)

F.A.I. RTE.	SECTION	COUNTY	TOTAL SHEETS	SHEET NO.
280	81-1(HB)R	Rock Island	503	168

CONTRACT NO. 64815

ILLINOIS FED. AID PROJECT

LAYOUT	REV. F.B.N.	04/05/10
DRAWN	P.W.M. / D.M.	07/21/10
REVIEWED	J.M.F. / H.N.	07/21/10

09-08-2010
G:\pw\pauwers\abu_cnt_abut\abfv\bridge\3692\09R0R\64815-035-H_Abut_NB_Det.dgn

Note: Pour steps monolithically with cap.

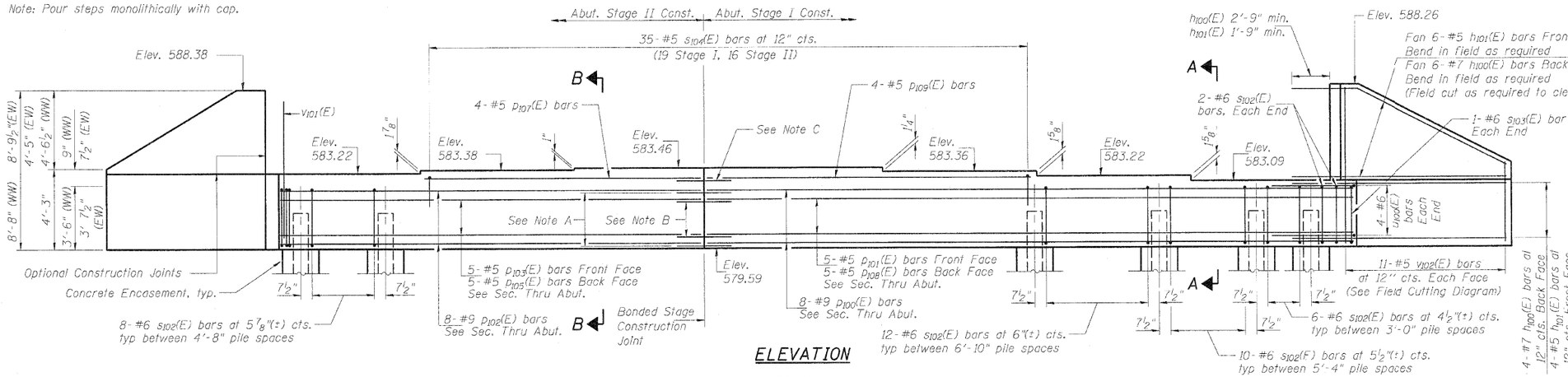

ELEVATION

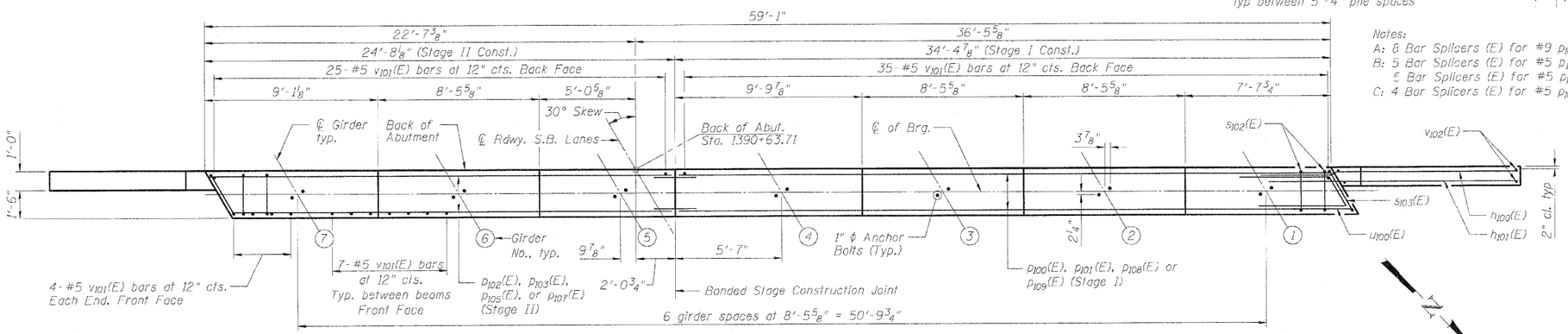

PLAN - TOP VIEW

Notes:
A: 8 Bar Splicers (E) for #9 p100(E) bars
B: 5 Bar Splicers (E) for #5 p101(E) bars and 5 Bar Splicers (E) for #5 p108(E) bars
C: 4 Bar Splicers (E) for #5 p109(E) bars

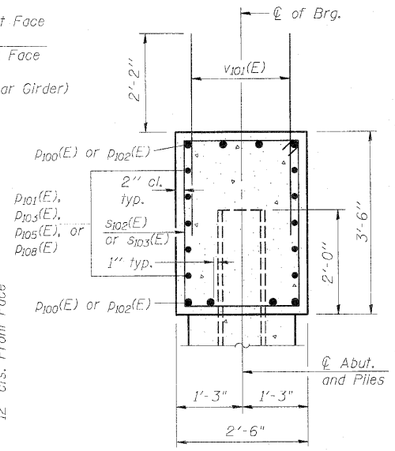

SECTION A-A
SEC. THRU ABUT.

(Dimensions at Right Angles)

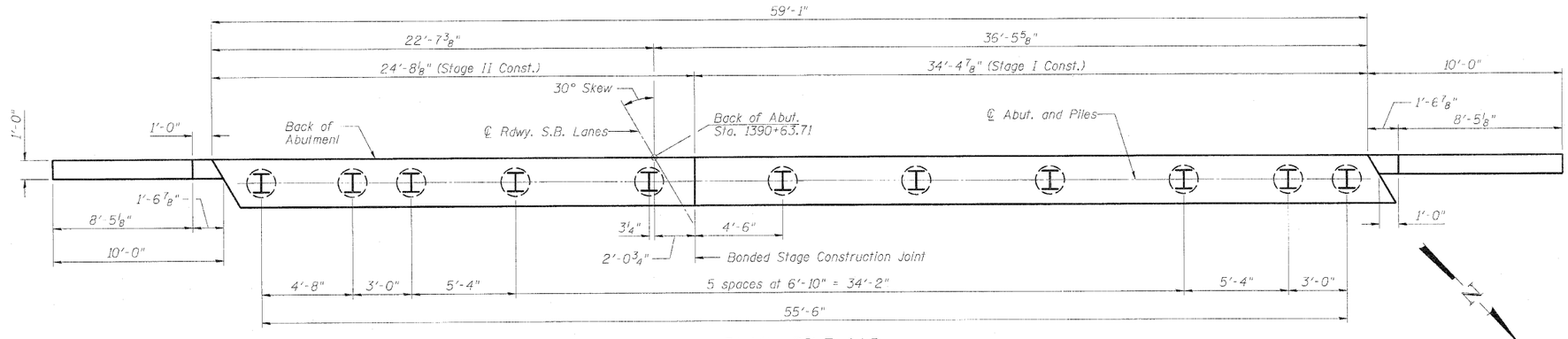

PLAN - PILE CAP

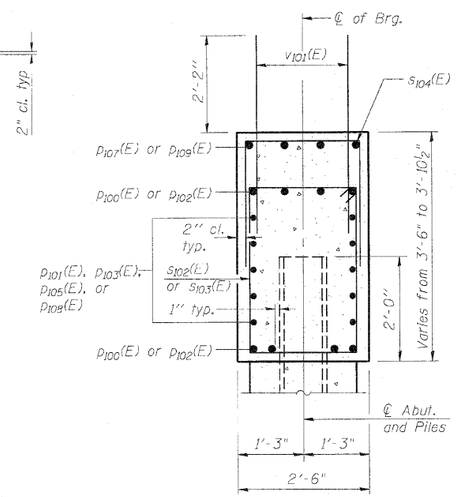

SECTION B-B
SEC. THRU ABUT.

(Dimensions at Right Angles)

PILE DATA

Type: HP12x53
Nominal Required Bearing: 420K
Allowable Resistance Available: 140K
Est. Length: 58'
No. Production Piles: 10
No. Test Piles: 1

SOUTH ABUTMENT - S.B.
STRUCTURE NUMBERS 081-0188 (S.B.) & 081-0189 (N.B.)

PROFESSIONAL DESIGN FIRM LICENSE #184-001084

HANSON
Hanson Professional Services Inc.

JOB NO.	SHEET NO.	F.A.I. RTE.	SECTION	COUNTY	TOTAL SHEETS	SHEET NO.
05R1532A	36	280	81-1(HB)R	Rock Island	503	169
DATE 07/23/10	50 SHEETS	CONTRACT NO. 64815				
		ILLINOIS FED. AID PROJECT				

LAYOUT	JKR/FLN	04/05/10
DRAWN	MCW/CJM	07/21/10
REVIEWED	JKR/FLN	07/21/10

07/21/2010
c:\pwtex.work\ds_rd_delete\dms36\82\C08\069-b1815-036-S_Abut_SB.dgn

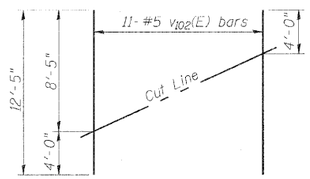

FIELD CUTTING DIAGRAM

Order $v_{102}(E)$ full length. Cut as shown and use remainder of bars in opposite face.

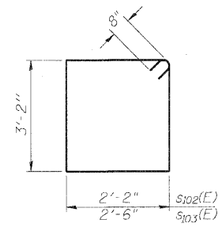

BARS $s_{102}(E)$ & $s_{103}(E)$

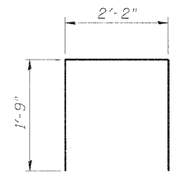

BAR $s_{104}(E)$

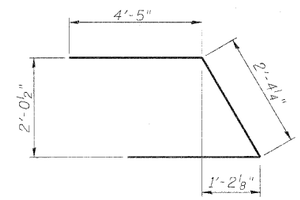

BAR $u_{100}(E)$

BILL OF MATERIAL

	Bar	No.	Size	Length	Shape
*	$h_{100}(E)$	20	#7	13'-9"	
*	$h_{101}(E)$	20	#5	12'-9"	
*	$p_{100}(E)$	8	#9	35'-5"	
	$p_{101}(E)$	5	#5	35'-5"	
*	$p_{102}(E)$	8	#9	24'-3"	
	$p_{103}(E)$	5	#5	23'-0"	
	$p_{105}(E)$	5	#5	24'-3"	
	$p_{107}(E)$	4	#5	15'-4"	
	$p_{108}(E)$	5	#5	34'-2"	
	$p_{109}(E)$	4	#5	18'-0"	
	$s_{102}(E)$	104	#6	12'-0"	
	$s_{103}(E)$	2	#6	12'-8"	
	$s_{104}(E)$	35	#5	5'-8"	
	$u_{100}(E)$	8	#6	11'-3"	
	$v_{101}(E)$	110	#5	4'-4"	
	$v_{102}(E)$	22	#5	12'-5"	
	Structure Excavation			Cu. Yd.	33
	Concrete Structures			Cu. Yd.	25.3
	Reinforcement Bars, Epoxy Coated			Pound	6,240
	Furnishing Steel Piles HP12x53			Foot	580
	Driving Piles			Foot	580
	Test Pile Steel HP12x53			Each	1
	Concrete Encasement			Cu. Yd.	2.5

* Field cut bars as required to fit.
For details of Bar Splicers, see Sheet 44 of 50.
For details of piles and Concrete Encasement, see Sheet 45 of 50.

PROFESSIONAL DESIGN FIRM LICENSE #184-001084

HANSON
Hanson Professional Services Inc.

JOB NO. 05R1532A
DATE 07/23/10

SHEET NO. 37
50 SHEETS

SOUTH ABUTMENT DETAILS - S.B.
STRUCTURE NUMBERS 081-0188 (S.B.) & 081-0189 (N.B.)

F.A.I. RTE.	SECTION	COUNTY	TOTAL SHEETS	SHEET NO.
280	81-1(HD)R	Rock Island	503	170

CONTRACT NO. 64815

ILLINOIS FED. AID PROJECT

LAYOUT KOV/TLN 04/05/10
DRAWN: NCW/JDM 07/21/10
REVIEWED: KRV/TLN 07/21/10

07/23/2010
c:\pwidot\workjob_jobfolder\5592\G80185 64815 03 S_Abut_SB_Det.dgn

Note: Pour steps monolithically with cap.

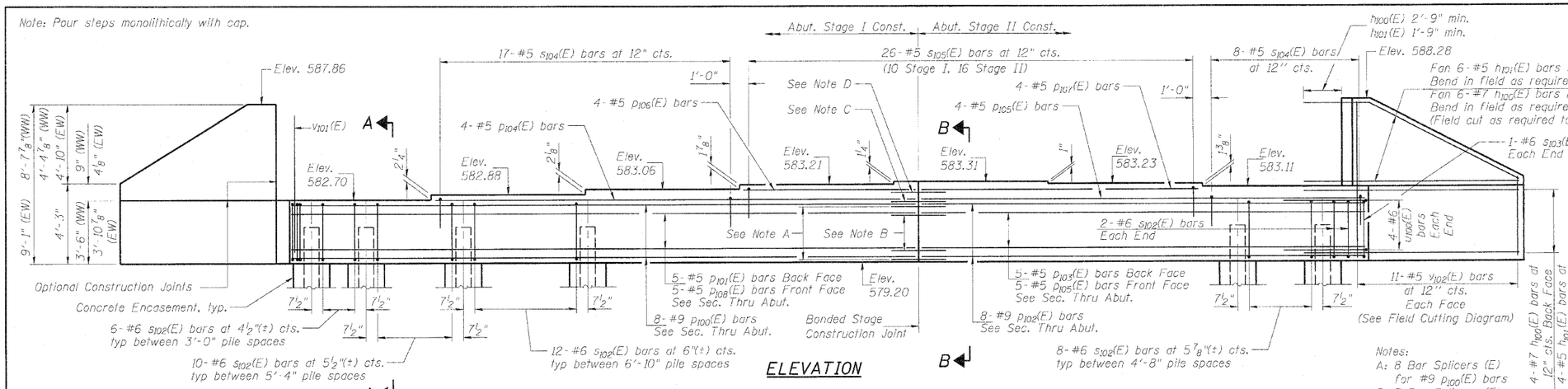

ELEVATION

Notes:

A: 8 Bar Splicers (E) for #9 p_{100}(E) bars

B: 5 Bar Splicers (E) for #5 p_{101}(E) bars and 5 Bar Splicers (E) for #5 p_{108}(E) bars

C: 4 Bar Splicers (E) for #5 p_{104}(E) bars

D: 4 Bar Splicers (E) for #5 p_{106}(E) bars

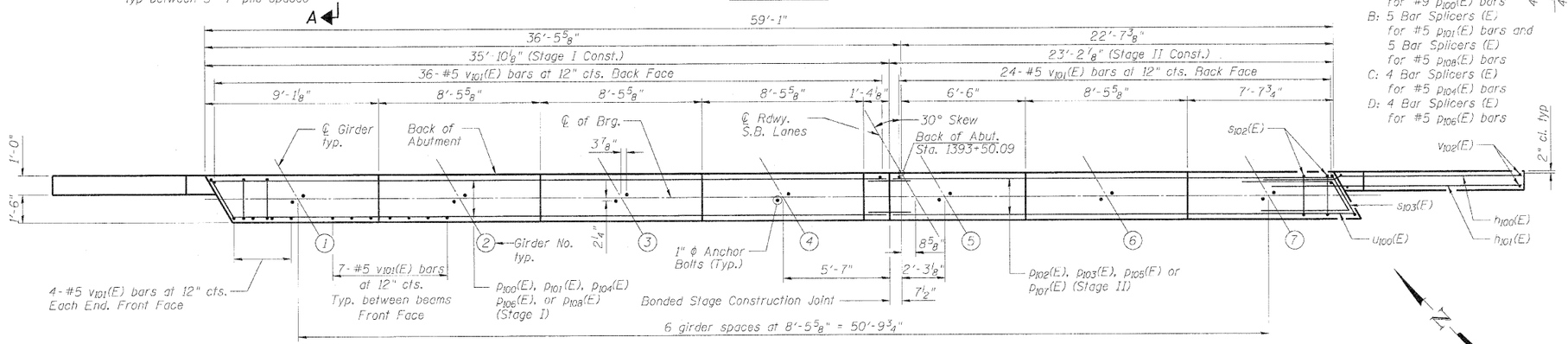

PLAN - TOP VIEW

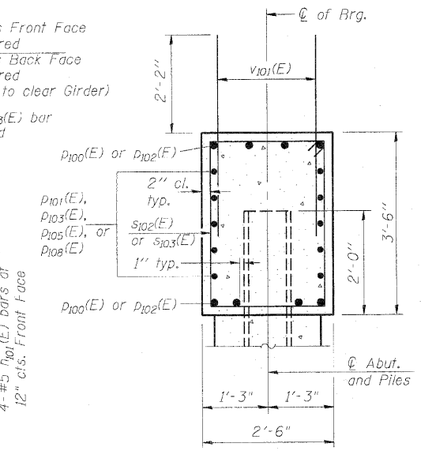

SECTION A-A
SEC. THRU ABUT.

(Dimensions at Right Angles)

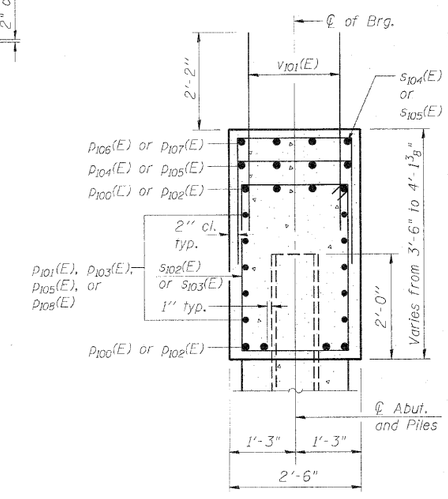

SECTION B-B
SEC. THRU ABUT.

(Dimensions at Right Angles)

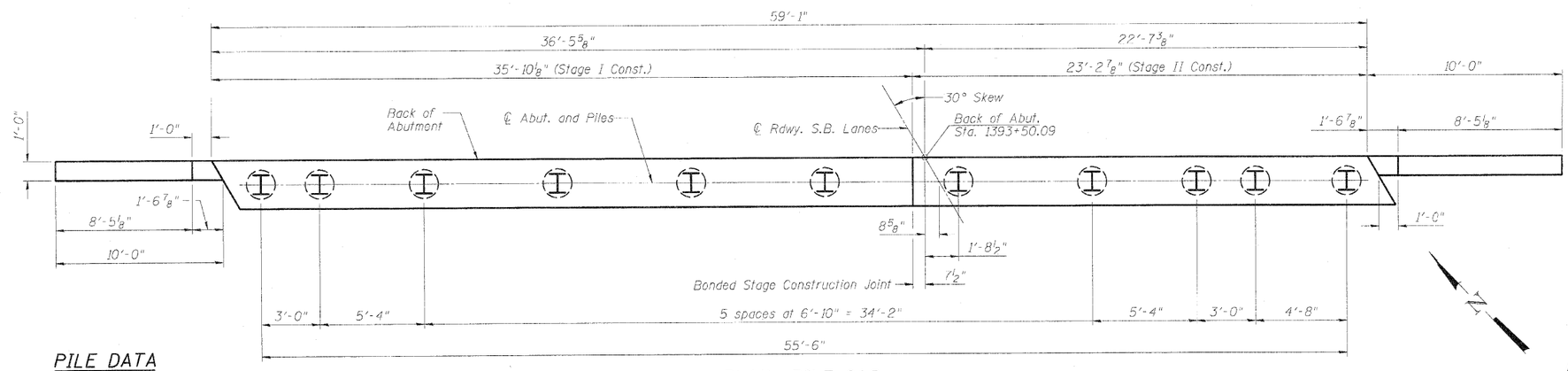

PLAN - PILE CAP

PILE DATA

Type: HP12x53
Nominal Required Bearing: 420K
Allowable Resistance Available: 140K
Est. Length: 51'
No. Production Piles: 10
No. Test Piles: 1

PROFESSIONAL DESIGN FIRM LICENSE #184-001084

HANSON
Hanson Professional Services Inc.

NORTH ABUTMENT - S.B.
STRUCTURE NUMBERS 081-0188 (S.B.) & 081-0189 (N.B.)

JOB NO.	SHEET NO.	F.A.I. RTE.	SECTION	COUNTY	TOTAL SHEETS	SHEET NO.
05R1532A	SHEET NO. 38	280	81-1(HB)R	Rock Island	503	171
DATE 07/23/10	50 SHEETS			CONTRACT NO. 64815		
			ILLINOIS	FED. AID PROJECT		

LAYOUT	KRF/ES	04/05/10
DRAWN	MDM/JBM	07/21/10
REVIEWED	KRF/ES	07/21/10

07-22-2010
c:\pwidos\work\dot_rst_davis\dist3\82PC081\081-64815-038-N_Abut_S3.dgn

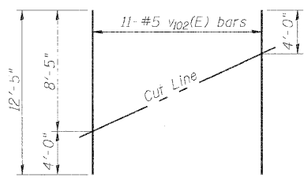

FIELD CUTTING DIAGRAM

Order v102(E) full length. Cut as shown and use remainder of bars in opposite face.

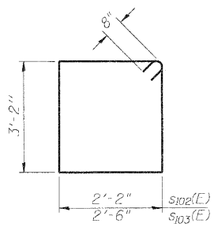

BARS s102(E) & s103(E)

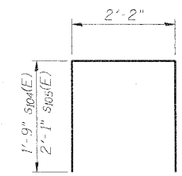

BARS s104(E) & s105(E)

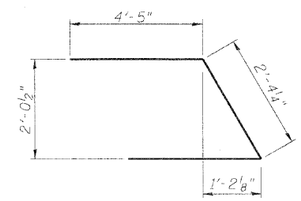

BAR u100(E)

BILL OF MATERIAL

	Bar	No.	Size	Length	Shape
*	h100(E)	20	#7	13'-9"	
*	h101(E)	20	#5	12'-9"	
*	p100(E)	8	#9	35'-5"	
	p101(E)	5	#5	35'-5"	
*	p102(E)	8	#9	24'-3"	
	p103(E)	5	#5	23'-0"	
	p104(E)	4	#5	26'-6"	
*	p105(E)	9	#5	24'-3"	
	p106(E)	4	#5	9'-7"	
	p107(E)	4	#5	15'-4"	
	p108(E)	5	#5	34'-2"	
	s102(E)	104	#6	12'-0"	
	s103(E)	2	#6	12'-8"	
	s104(E)	25	#5	5'-8"	
	s105(E)	26	#5	6'-4"	
	u100(E)	8	#6	11'-3"	
	v101(E)	110	#5	4'-4"	
	v102(E)	22	#5	12'-5"	

Structure Excavation	Cu. Yd.	40
Concrete Structures	Cu. Yd.	26.2
Reinforcement Bars, Epoxy Coated	Pound	6,530
Furnishing Steel Piles HP12x53	Foot	510
Driving Piles	Foot	510
Test Pile Steel HP12x53	Each	1
Concrete Encasement	Cu. Yd.	2.5

* Field cut bars as required to fit.
For details of Bar Splicers, see Sheet 44 of 50.
For details of piles and Concrete Encasement, see Sheet 45 of 50.

NORTH ABUTMENT DETAILS - S.B.

STRUCTURE NUMBERS 081-0188 (S.B.) & 081-0189 (N.B.)

PROFESSIONAL DESIGN FIRM LICENSE #184-001084

HANSON
Hanson Professional Services Inc.

JOB NO. 05R1532A
DATE 07/23/10

SHEET NO. 39
50 SHEETS

F.A.I. RTE.	SECTION	COUNTY	TOTAL SHEETS	SHEET NO.
280	81-1(HB)R	Rock Island	503	172

CONTRACT NO. 64815

ILLINOIS FED. AID PROJECT

LAYOUT	JKR/FIN	04/05/10
DRAWN	MCW/JDM	07/21/10
REVIEWED	JKR/FIN	07/21/10

07-22-2010
c:\pwidse.work\dis_net_ideleted\5592\D801189 6-6615-03-H_Abut_SB_Det.dgn

Notes:
Space reinforcement in cap to miss anchor bolts.
Pour steps monolithically with cap.
For details of piles, see Sheet 45 of 50.

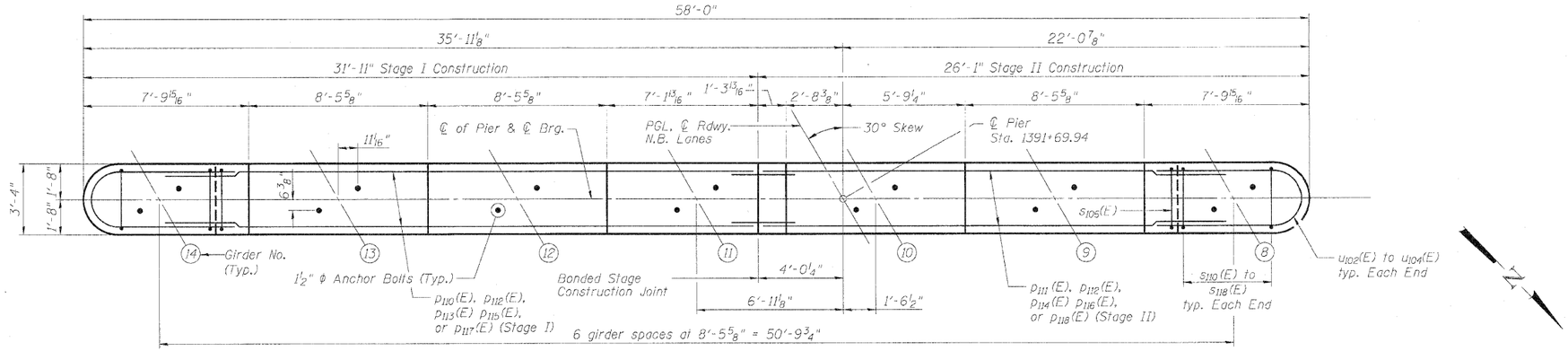

TOP PLAN

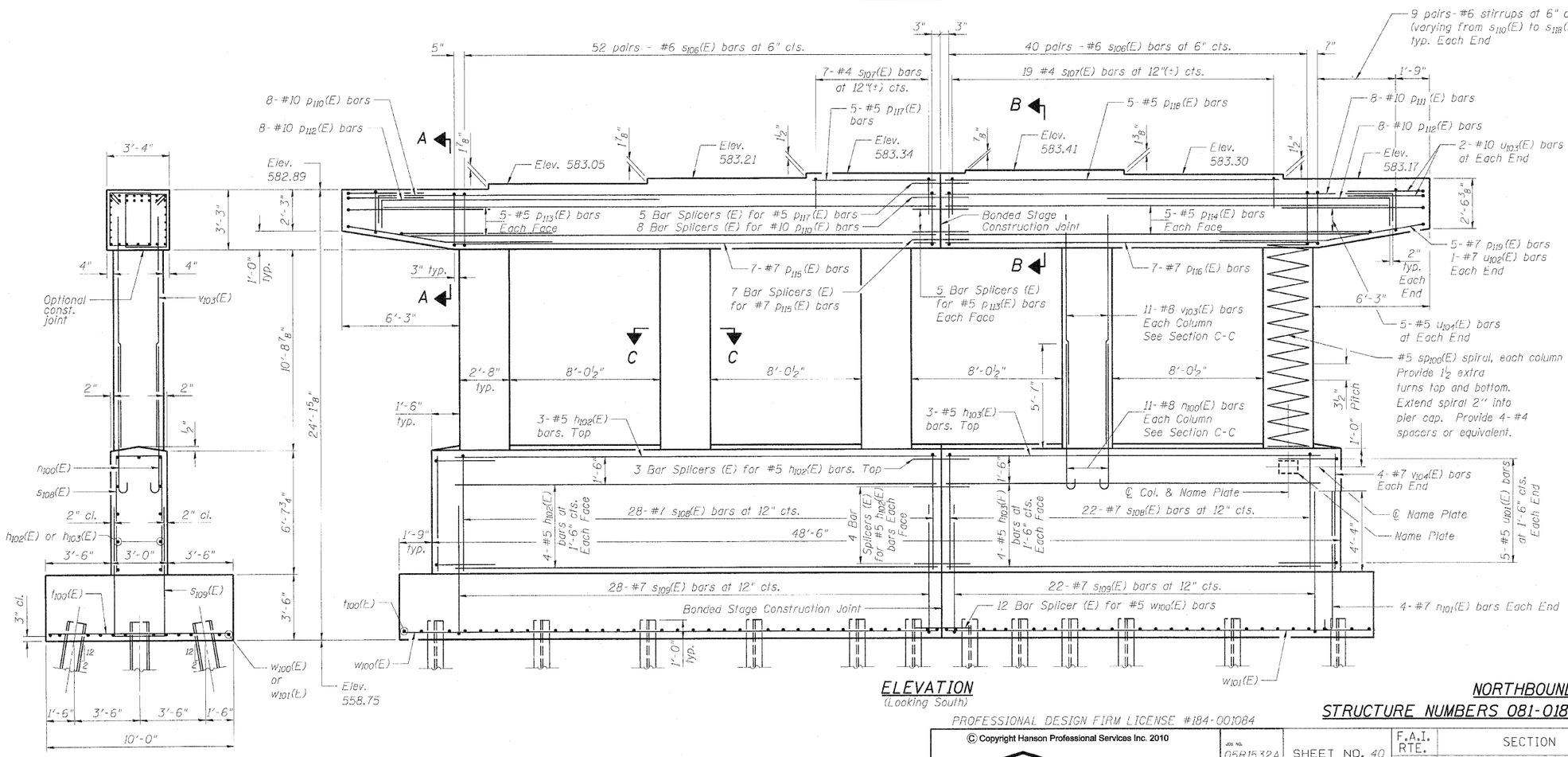

END VIEW

ELEVATION
(Looking South)

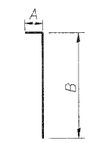

BARS p110(E)-p112(E)

Bar	A	B
p110(E)	1'-10"	30'-1"
p111(E)	1'-10"	24'-3"
p112(E)	1'-10"	15'-0"

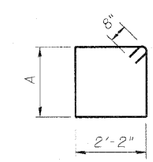

BARS s110(E)-s118(E)

Bar	A
s110(E)	2'-10"
s111(E)	2'-9"
s112(E)	2'-8"
s113(E)	2'-7 1/4"
s114(E)	2'-6 1/4"
s115(E)	2'-5 1/4"
s116(E)	2'-4 1/4"
s117(E)	2'-3 1/4"
s118(E)	2'-2 1/4"

NORTHBOUND PIER
STRUCTURE NUMBERS 081-0188 (S.B.) & 081-0189 (N.B.)

PROFESSIONAL DESIGN FIRM LICENSE #184-001084

HANSON
Hanson Professional Services Inc.

JOB NO. 05R1532A
DATE 07/23/10
SHEET NO. 40
50 SHEETS

F.A.I. RTE.	SECTION	COUNTY	TOTAL SHEETS	SHEET NO.
280	81-1(HB)R	Rock Island	503	173

CONTRACT NO. 64815
ILLINOIS FED. AID PROJECT

LAYOUT	JKR/TLN	04/05/10
DRAWN	MGM/TDM	07/21/10
REVIEWED	JKR/TLN	07/21/10

07/23/2010
cn04e1dgn.dgn rdb_dataset(s): 55S2N08R08-64815-040-HB_Pier.dgn

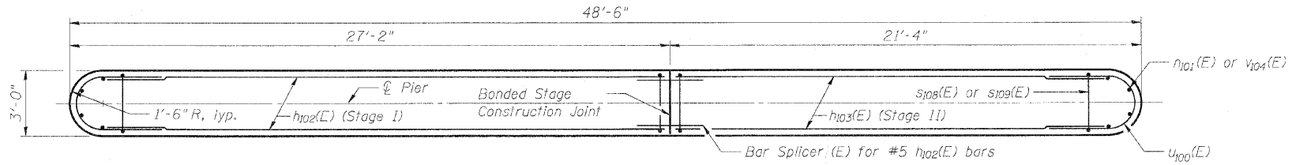

WALL REINFORCEMENT PLAN

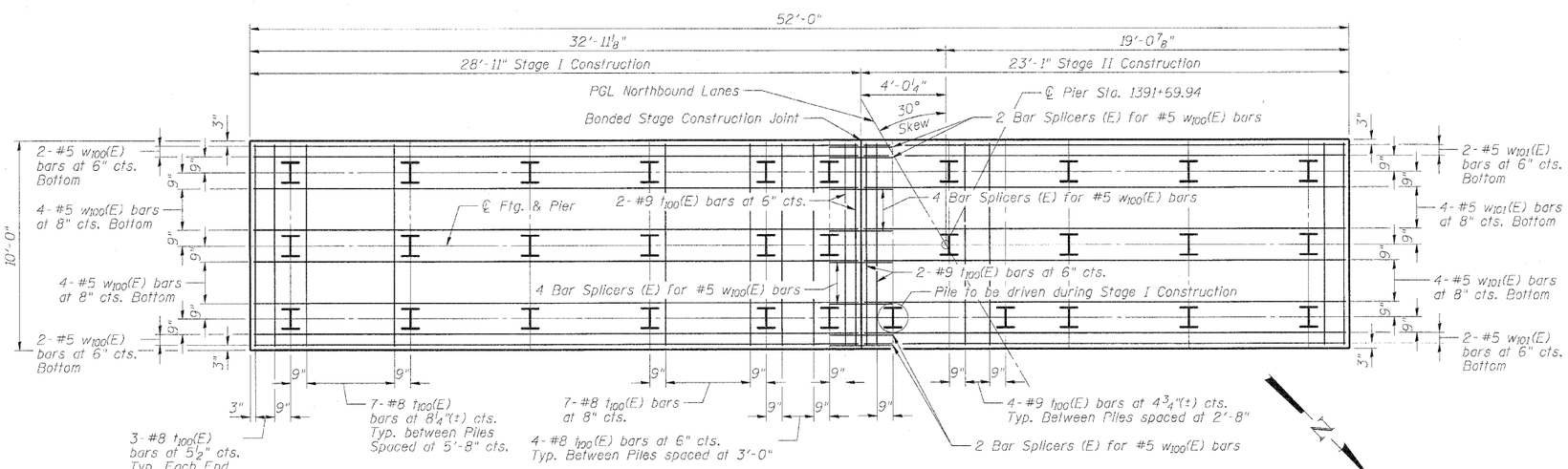

FOOTING REINFORCEMENT PLAN

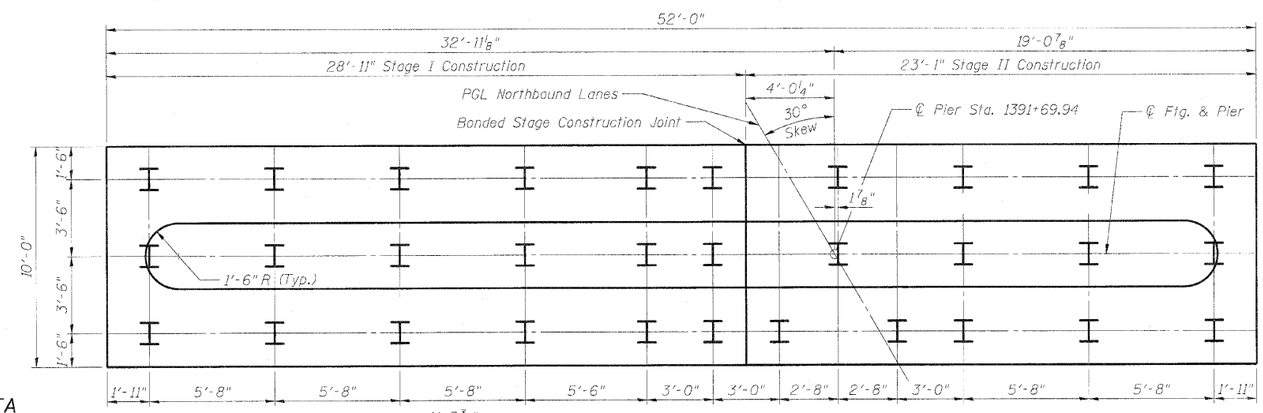

FOOTING PILE PLAN

PILE DATA

Type: HP 12x53
Nominal Required Bearing: 420 kips
Allowable Resistance Available: 140 kips
Est. Length: 36'
No. Production Piles: 30
No. Test Piles: 1

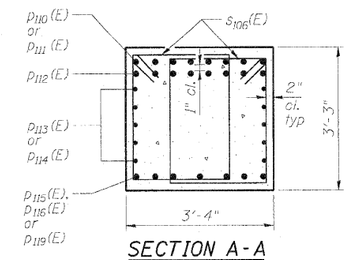

SECTION A-A

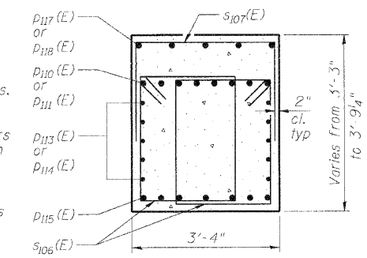

SECTION B-B

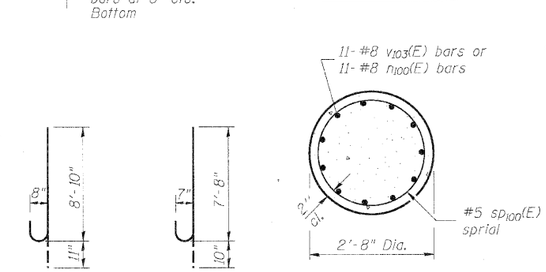

BAR $n_{100}(E)$ BAR $n_{101}(E)$ SECTION C-C

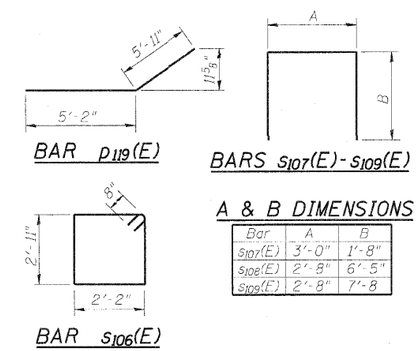

BAR $p_{119}(E)$ BARS $s_{107}(E)$-$s_{109}(E)$ BAR $s_{106}(E)$

A & B DIMENSIONS

Bar	A	B
$s_{107}(E)$	3'-0"	1'-8"
$s_{108}(E)$	2'-8"	6'-5"
$s_{109}(E)$	2'-8"	7'-8

BILL OF MATERIAL

Bar	No.	Size	Length	Shape
$h_{102}(E)$	11	#5	25'-6"	
$h_{103}(E)$	11	#5	19'-8"	
$n_{100}(E)$	55	#8	9'-9"	
$n_{101}(E)$	8	#7	8'-6"	
$p_{110}(E)$	8	#10	31'-11"	
$p_{111}(E)$	8	#10	26'-1"	
$p_{112}(E)$	16	#10	16'-10"	
* $p_{113}(E)$	10	#5	30'-1"	
* $p_{114}(E)$	10	#5	24'-3"	
$p_{115}(E)$	7	#7	25'-9"	
$p_{116}(E)$	7	#7	19'-11"	
$p_{117}(E)$	5	#5	6'-10"	
$p_{118}(E)$	5	#5	17'-11"	
* $p_{119}(E)$	10	#7	11'-1"	
$s_{106}(E)$	184	#6	11'-6"	
$s_{107}(E)$	26	#4	6'-4"	
$s_{108}(E)$	50	#7	15'-6"	
$s_{109}(E)$	50	#7	18'-0"	
$s_{110}(E)$	4	#6	11'-4"	
$s_{111}(E)$	4	#6	11'-2"	
$s_{112}(E)$	4	#6	11'-0"	
$s_{113}(E)$	4	#6	10'-11"	
$s_{114}(E)$	4	#6	10'-9"	
$s_{115}(E)$	4	#6	10'-7"	
$s_{116}(E)$	4	#6	10'-5"	
$s_{117}(E)$	4	#6	10'-3"	
$s_{118}(E)$	4	#6	10'-1"	
** $sp_{100}(E)$	5	#5	10'-11"	
$t_{100}(E)$	68	#8	9'-9"	
$u_{101}(E)$	10	#5	9'-10"	
$u_{102}(E)$	2	#7	23'-10"	
$u_{103}(E)$	4	#10	29'-2"	
$u_{104}(E)$	10	#5	11'-10"	
$v_{103}(E)$	55	#8	13'-8"	
$v_{104}(E)$	8	#7	6'-5"	
$w_{100}(E)$	12	#5	28'-8"	
$w_{101}(E)$	12	#5	22'-10"	
Structure Excavation		Cu. Yd.	177	
Concrete Structures		Cu. Yd.	138.6	
Reinforcement Bars, Epoxy Coated		Pound	21,010	
Furnishing Steel Piles, HP12x53		Foot	1080	
Driving Piles		Foot	1080	
Test Pile Steel, HP12x53		Each	1	

* Field cut bars as required to fit.
** Length is height of spiral.
For details of Bar Splicers, see Sheet 44 of 50.

NORTHBOUND PIER
STRUCTURE NUMBERS 081-0188 (S.B.) & 081-0189 (N.B.)

PROFESSIONAL DESIGN FIRM LICENSE #184-001084

HANSON
Hanson Professional Services Inc.

JOB NO. 05R1532A
DATE 07/23/10
SHEET NO. 41
50 SHEETS

F.A.I. RTE.	SECTION	COUNTY	TOTAL SHEETS	SHEET NO.
280	81-1(HB)R	Rock Island	503	174

CONTRACT NO. 64815
ILLINOIS FED. AID PROJECT

LAYOUT JKB/KLN 04/05/10
DRAWN MCM/GIM 07/27/10
REVIEWED JKB/KLN 07/27/10
CTX2SCI00
c:\pwidot\workdo_not_delete\mcm\3592\C80886-64815-041-NB_Pier_Design

Notes:
Space reinforcement in cap to miss anchor bolts.
Pour steps monolithically with cap.
For details of piles, see Sheet 45 of 50.

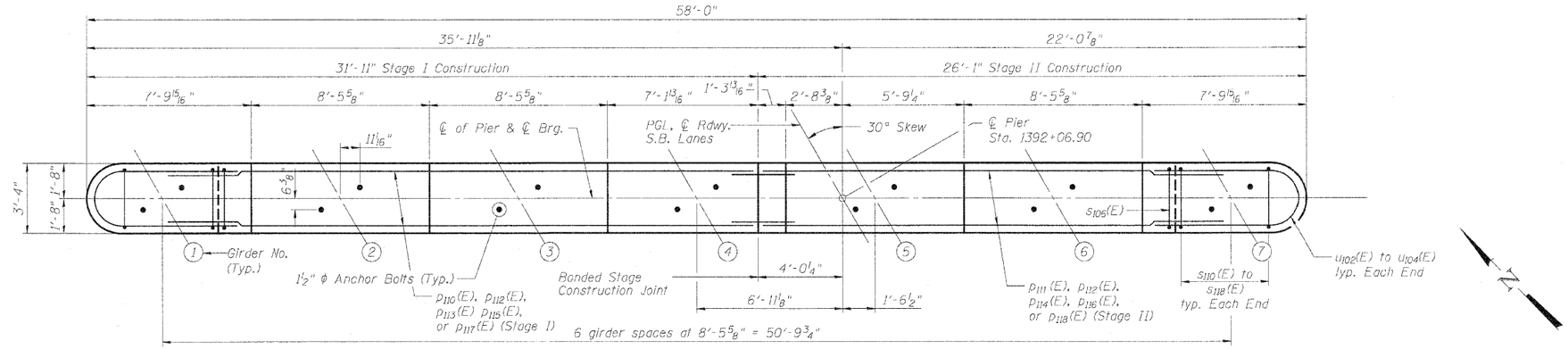

TOP PLAN

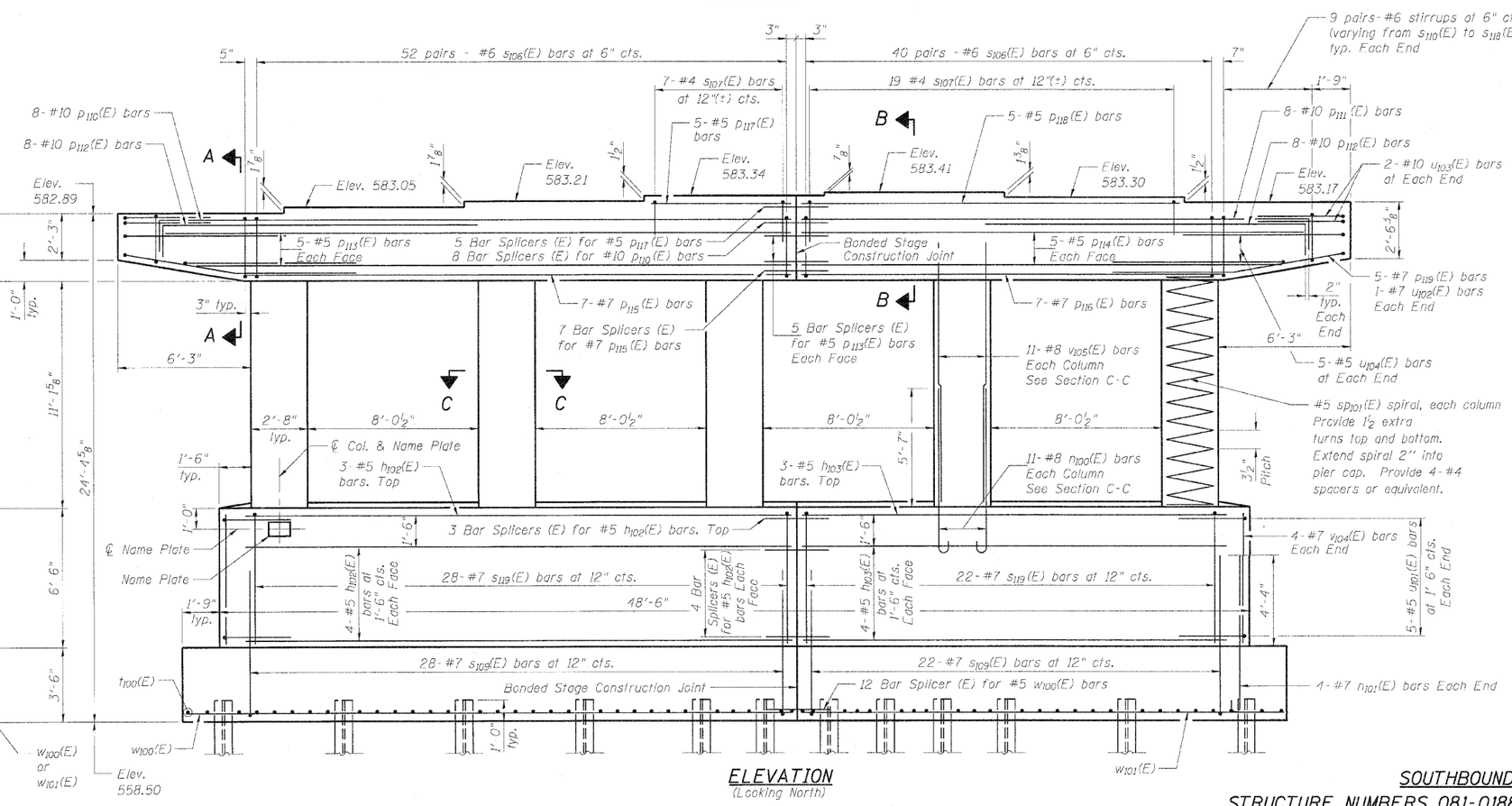

ELEVATION
(Looking North)

END VIEW

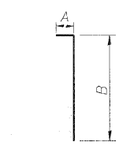

BARS p110(E)-p112(E)

Bar	A	B
p110(E)	1'-10"	30'-1"
p111(E)	1'-10"	24'-3"
p112(E)	1'-10"	15'-0"

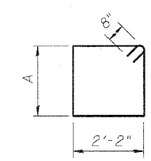

BARS s110(E)-s118(E)

Bar	A
s110(E)	2'-10"
s111(E)	2'-9"
s112(E)	2'-8"
s113(E)	2'-7 1/4"
s114(E)	2'-6 1/4"
s115(E)	2'-5 1/4"
s116(E)	2'-4 1/4"
s117(E)	2'-3 1/4"
s118(E)	2'-2 1/4"

SOUTHBOUND PIER
STRUCTURE NUMBERS 081-0188 (S.B.) & 081-0189 (N.B.)

PROFESSIONAL DESIGN FIRM LICENSE #184-001084

HANSON
Hanson Professional Services Inc.

JOB NO.	SHEET NO. 42	F.A.I. RTE.	SECTION	COUNTY	TOTAL SHEETS	SHEET NO.
05R1532A	50 SHEETS	280	81-1(HB)R	Rock Island	503	175
DATE 07/23/10				CONTRACT NO. 64B15		
				ILLINOIS FED. AID PROJECT		

LAYOUT	KRF/FLN	04/05/10
DRAWN	MCM/JDM	07/21/10
REVIEWED	KRF/FLN	07/21/10

07/22/2010
c:\pwidas_wrk\ida_nd_dgn\ents\5532\081088-64815-042-S13_Pier.dgn

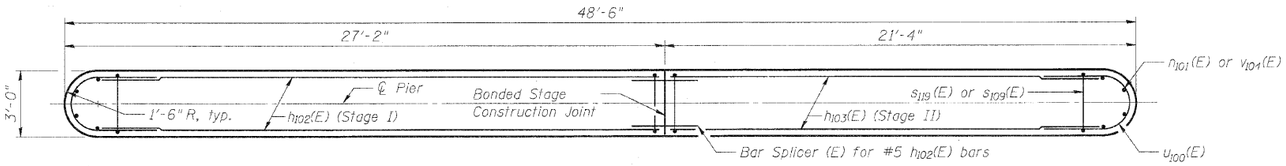

WALL REINFORCEMENT PLAN

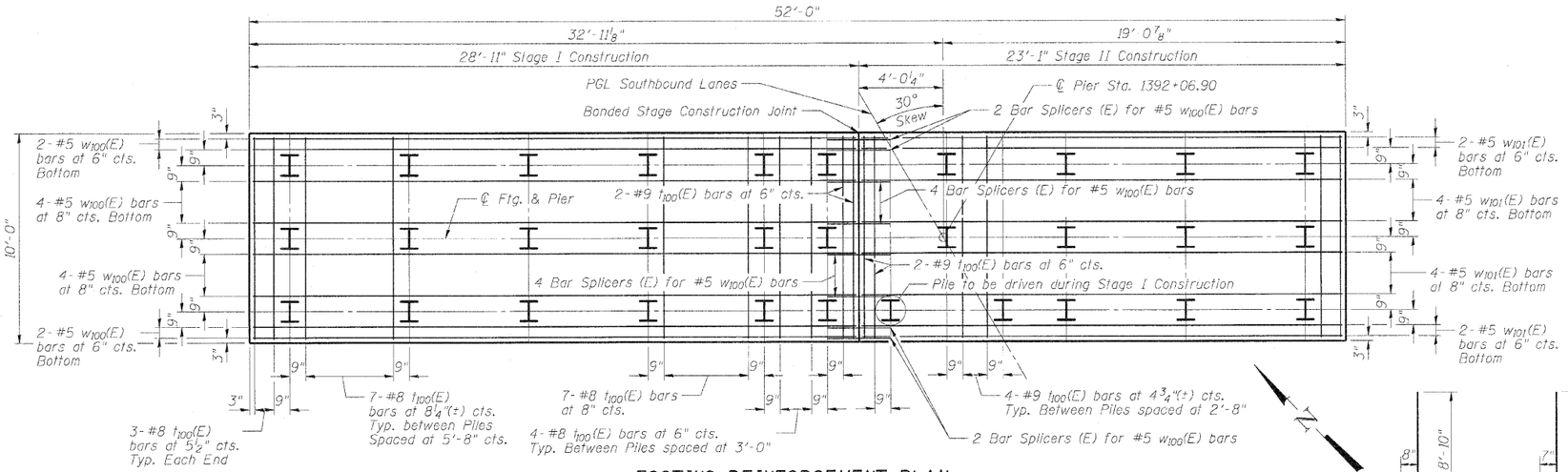

FOOTING REINFORCEMENT PLAN

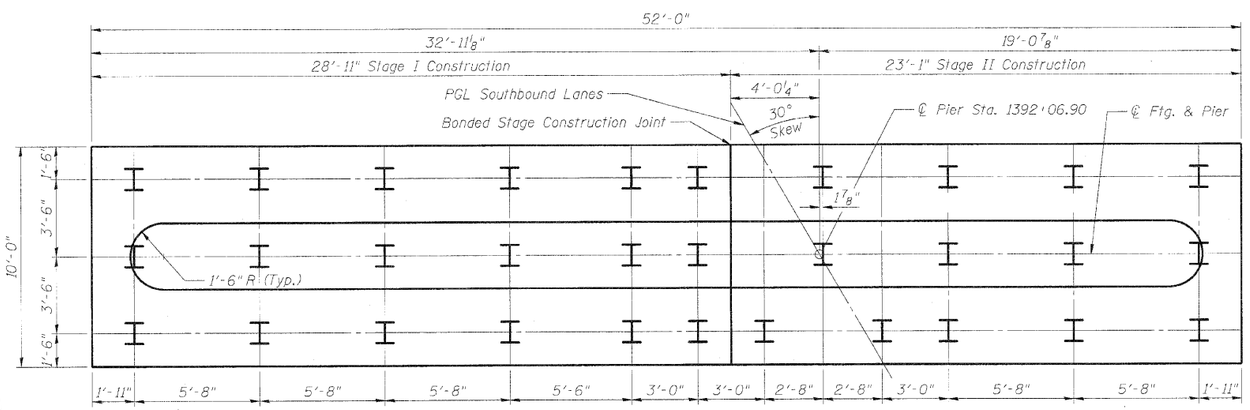

FOOTING PILE PLAN

PILE DATA

Type: HP 12x53
Nominal Required Bearing: 420 kips
Allowable Resistance Available: 140 kips
Est. Length: 37'
No. Production Piles: 30
No. Test Piles: 1

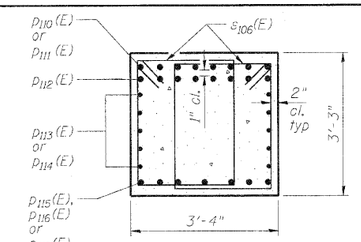

SECTION A-A

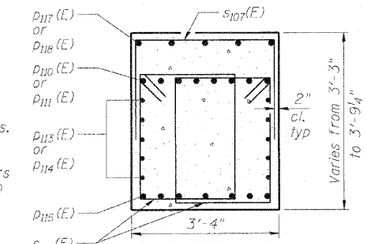

SECTION B-B

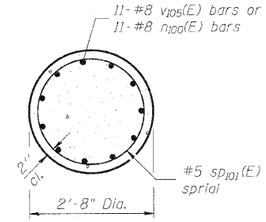

SECTION C-C

BAR n_{100}(E)

BAR n_{101}(E)

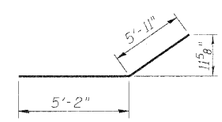

BAR p_{119}(E)

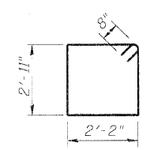

BAR s_{106}(E)

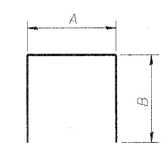

BARS s_{107}(E), s_{109}(E) and s_{119}(E)

A & B DIMENSIONS

Bar	A	B
s_{107}(E)	3'-0"	1'-8"
s_{109}(E)	2'-8"	7'-8"
s_{119}(E)	2'-8"	6'-3"

BILL OF MATERIAL

Bar	No.	Size	Length	Shape
h_{102}(E)	11	#5	25'-6"	
h_{103}(E)	11	#5	19'-8"	
n_{100}(E)	55	#8	9'-9"	
n_{101}(E)	8	#7	8'-6"	
p_{110}(E)	8	#10	31'-11"	
p_{111}(E)	8	#10	26'-1"	
p_{112}(E)	16	#10	15'-10"	
* p_{113}(E)	10	#5	30'-1"	
* p_{114}(E)	10	#5	24'-3"	
p_{115}(E)	7	#7	25'-9"	
p_{116}(E)	7	#7	19'-11"	
p_{117}(E)	5	#5	6'-10"	
p_{118}(E)	5	#5	17'-11"	
* p_{119}(E)	10	#7	11'-1"	
s_{106}(E)	184	#6	11'-6"	
s_{107}(E)	26	#4	6'-4"	
s_{109}(E)	50	#7	18'-0"	
s_{110}(E)	4	#6	11'-4"	
s_{111}(E)	4	#6	11'-2"	
s_{112}(E)	4	#6	11'-0"	
s_{113}(E)	4	#6	10'-11"	
s_{114}(E)	4	#6	10'-9"	
s_{115}(E)	4	#6	10'-7"	
s_{116}(E)	4	#6	10'-5"	
s_{117}(E)	4	#6	10'-3"	
s_{118}(E)	4	#6	10'-1"	
s_{119}(E)	50	#7	15'-2"	
** sp_{101}(E)	5	#5	11'-3"	
t_{100}(E)	68	#8	9'-9"	
u_{101}(E)	10	#5	9'-10"	
u_{102}(E)	2	#7	23'-10"	
u_{103}(E)	4	#10	29'-2"	
u_{104}(E)	10	#5	11'-10"	
v_{104}(E)	8	#7	6'-5"	
v_{105}(E)	55	#8	14'-1"	
w_{100}(E)	12	#5	28'-8"	
w_{101}(E)	12	#5	22'-10"	
Structure Excavation			Cu. Yd.	176
Concrete Structures			Cu. Yd.	138.2
Reinforcement Bars, Epoxy Coated			Pound	21,080
Furnishing Steel Piles, HP12x53			Foot	1110
Driving Piles			Foot	1110
Test Pile Steel, HP12x53			Each	1

* Field cut bars as required to fit.
** Length is height of spiral.
For details of Bar Splicers, see Sheet 44 of 50.

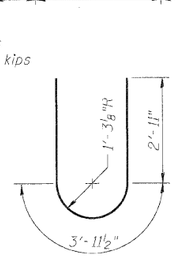

BAR u_{101}(E)

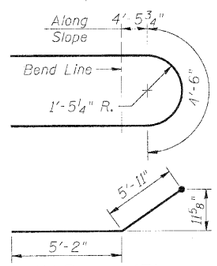

BAR u_{102}(E)

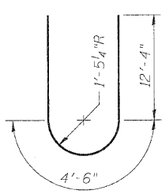

BAR u_{103}(E)

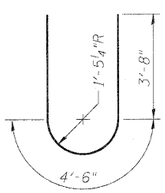

BAR u_{104}(E)

PROFESSIONAL DESIGN FIRM LICENSE #184-001084

HANSON
Hanson Professional Services Inc.

JOB NO. 05R1532A
DATE 07/23/10
SHEET NO. 43
50 SHEETS

SOUTHBOUND PIER
STRUCTURE NUMBERS 081-0188 (S.B.) & 081-0189 (N.B.)

F.A.I. RTE.	SECTION	COUNTY	TOTAL SHEETS	SHEET NO.
280	81-1(HB)R	Rock Island	503	176

CONTRACT NO. 64815
ILLINOIS FED. AID PROJECT

LAYOUT	REVIEWED	04/05/10
DRAWN	NCW/JDM	07/27/10
REVIEWED	JKB/FCN	07/27/10

07/27/2010
c:\pwidus_workspace\PWIDUS\D0605\E64815\D43-SB_Pier_Design

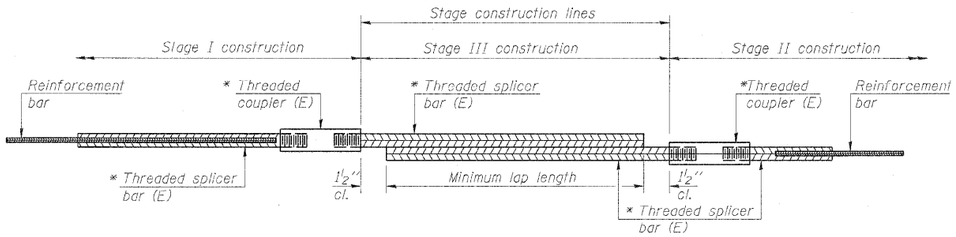

CLOSURE POUR BAR SPLICER ASSEMBLY

Minimum Lap Lengths				
Bar size to be spliced	Table 1	Table 2	Table 3	Table 4
3, 4	1'-5"	1'-11"	2'-1"	2'-4"
5	1'-9"	2'-5"	2'-7"	2'-11"
6	2'-1"	2'-11"	3'-1"	3'-6"
7	2'-9"	3'-10"	4'-2"	4'-8"
8	3'-8"	5'-1"	5'-5"	6'-2"
9	4'-7"	6'-5"	6'-10"	7'-9"

Table 1: Black bar, 0.8 Class C
Table 2: Black bar, Top bar lap, 0.8 Class C
Table 3: Epoxy bar, 0.8 Class C
Table 4: Epoxy bar, Top bar lap, 0.8 Class C

Threaded splicer bar length = min. lap length + 1½" + thread length

* Epoxy not required on Bar Splicer Assembly components used in conjunction with black bars.

Location	Bar size	No. assemblies required	Table for minimum lap length
NB Slab	#5	1614	Table 3
SB Slab	#5	1614	Table 3

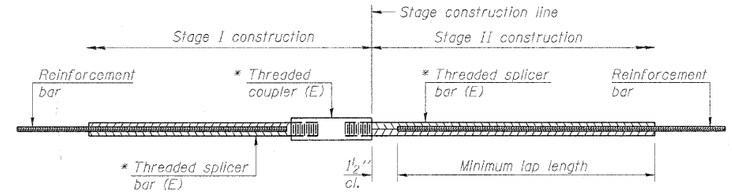

STANDARD BAR SPLICER ASSEMBLY

Minimum Lap Lengths						
Bar size to be spliced	Table 1	Table 2	Table 3	Table 4	Table 5	Table 6
3, 4	1'-5"	1'-11"	2'-1"	2'-4"	2'-7"	2'-11"
5	1'-9"	2'-5"	2'-7"	2'-11"	3'-3"	3'-8"
6	2'-1"	2'-11"	3'-1"	3'-6"	3'-10"	4'-5"
7	2'-9"	3'-10"	4'-2"	4'-8"	5'-2"	5'-10"
8	3'-8"	5'-1"	5'-5"	6'-2"	6'-9"	7'-8"
9	4'-7"	6'-5"	6'-10"	7'-9"	8'-7"	9'-8"
10	5'-10"	8'-1"	8'-8"	9'-10"	10'-10"	12'-4"

Table 1: Black bar, 0.8 Class C
Table 2: Black bar, Top bar lap, 0.8 Class C
Table 3: Epoxy bar, 0.8 Class C
Table 4: Epoxy bar, Top bar lap, 0.8 Class C
Table 5: Epoxy bar, 1.7 ld Class C
Table 6: Epoxy bar, Top bar lap, 1.7 ld Class C

Threaded splicer bar length = min. lap length + 1½" + thread length

* Epoxy not required on Bar Splicer Assembly components used in conjunction with black bars.

Location	Bar size	No. assemblies required	Table for minimum lap length
Abutment Diaphragms	#6	16	Table 4
Approach Slabs	#4	100	Table 3
Approach Slabs	#5	184	Table 3
Approach Footings	#5	160	Table 3
Abutment Caps	#9	32	Table 6
Abutment Caps	#5	64	Table 6
Piers	#10	16	Table 6
Piers	#7	14	Table 5
Piers	#5	76	Table 6

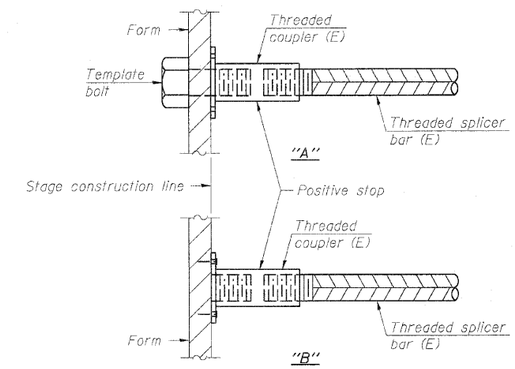

INSTALLATION AND SETTING METHODS

"A" : Set bar splicer assembly by means of a template bolt.
"B" : Set bar splicer assembly by nailing to wood forms or cementing to steel forms.
(E) : Indicates epoxy coating.

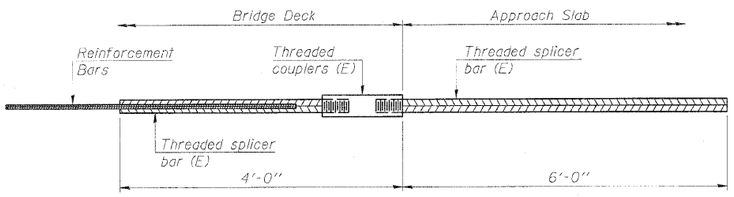

BAR SPLICER ASSEMBLY FOR #5 BAR ON INTEGRAL OR SEMI-INTEGRAL ABUTMENTS

No. required = 112 NB Bridge
112 SB Bridge

NOTES

Splicer bars shall be deformed with threaded ends and have a minimum 60 ksi yield strength.

All reinforcement shall be lapped and tied to the splicer bars.

Bar splicer assemblies shall be epoxy coated according to the requirements for reinforcement bars. See Section 508 of the Standard Specifications.

See special provision for Mechanical Splicers.

See approved list of bar splicer assemblies and mechanical splicers for alternatives.

PROFESSIONAL DESIGN FIRM LICENSE #184-001084

HANSON
Hanson Professional Services Inc.

JOB NO. 05R1532A
DATE 07/23/10
SHEET NO. 44
50 SHEETS

BAR SPLICER DETAILS
STRUCTURE NUMBERS 081-0188 (S.B.) & 081-0189 (N.B.)

F.A.I. RTE.	SECTION	COUNTY	TOTAL SHEETS	SHEET NO.
280	81-1(HB)R	Rock Island	503	177
		CONTRACT NO. 64815		
		ILLINOIS FED. AID PROJECT		

LAYOUT	JKS/F.L.N	04/05/10
DRAWN	NCW/JDM	07/21/10
REVIEWED	JKS/F.L.N	07/21/10

07/22/2010
c:\pwidot\bp_wrk\Kdot_rd_bridge\dist_1999\D080189-6-R5-044-Bar_Splicer

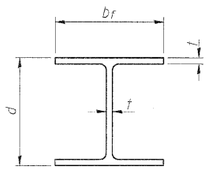

STEEL PILE TABLE

Designation	Depth d	Flange width b_f	Web and Flange thickness t	Encasement diameter A
HP 14x117	14 1/4"	14 7/8"	13/16"	30"
x102	14"	14 3/4"	11/16"	30"
x89	13 7/8"	14 3/4"	5/8"	30"
x73	13 5/8"	14 5/8"	1/2"	30"
HP 12x84	12 1/4"	12 1/4"	11/16"	24"
x74	12 1/8"	12 1/4"	5/8"	24"
x63	12"	12 1/8"	1/2"	24"
x53	11 3/4"	12"	7/16"	24"
HP 10x57	10"	10 1/4"	9/16"	24"
x42	9 3/4"	10 1/8"	7/16"	24"
HP 8x36	8"	8 1/8"	7/16"	18"

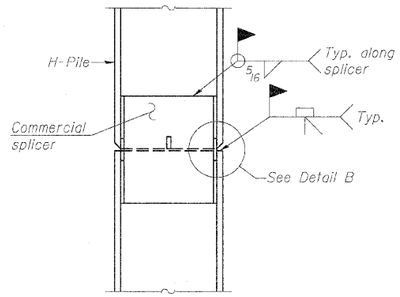

ELEVATION

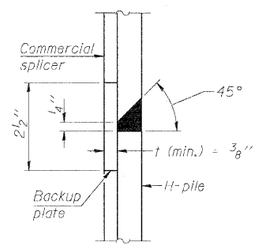

DETAIL "B"

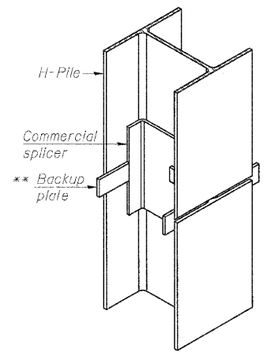

ISOMETRIC VIEW

WELDED COMMERCIAL SPLICE

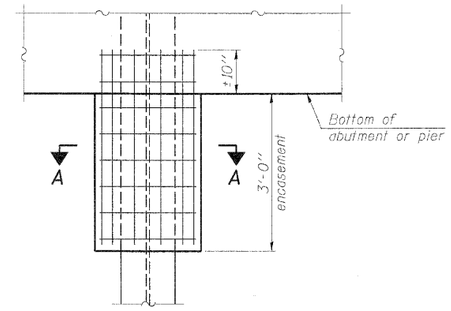

ELEVATION

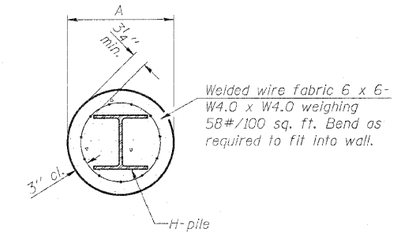

Note:
Forms for encasement may be omitted when soil conditions permit.

SECTION A-A

PILE ENCASEMENT

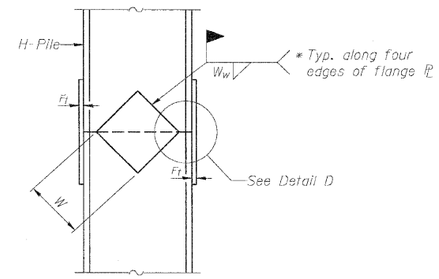

ELEVATION

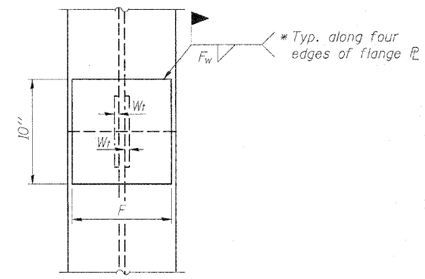

END VIEW

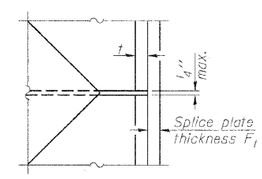

DETAIL D

Designation	F	F_t	F_w	W	W_t	W_w
HP 14x117	12 1/2"	1"	7/8"	7 3/4"	5/8"	1/2"
x102	12 1/2"	7/8"	3/4"	7 3/4"	5/8"	1/2"
x89	12 1/2"	3/4"	11/16"	7 3/4"	5/8"	1/2"
x73	12 1/2"	5/8"	9/16"	7 3/4"	5/8"	1/2"
HP 12x84	10"	7/8"	11/16"	6 1/2"	5/8"	1/2"
x74	10"	7/8"	11/16"	6 1/2"	5/8"	1/2"
x63	10"	5/8"	1/2"	6 1/2"	1/2"	3/8"
x53	10"	5/8"	1/2"	6 1/2"	1/2"	3/8"
HP 10x57	8"	3/4"	9/16"	5 1/4"	1/2"	3/8"
x42	8"	5/8"	9/16"	5 1/4"	1/2"	3/8"
HP 8x36	7"	5/8"	7/16"	4 1/4"	1/2"	3/8"

WELDED PLATE FIELD SPLICE

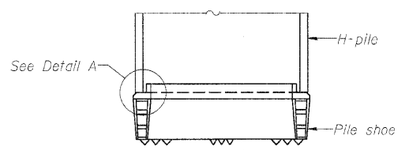

ELEVATION

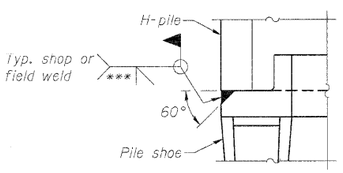

DETAIL A

H-PILE SHOE ATTACHMENT

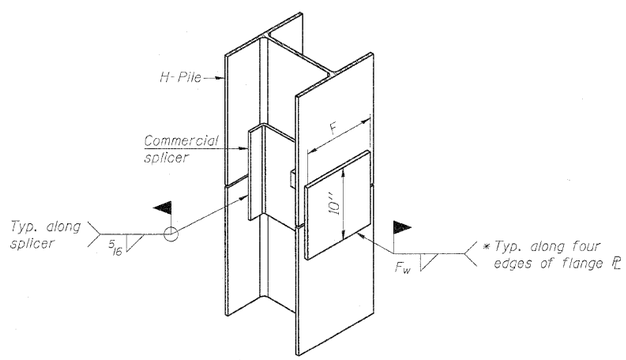

ISOMETRIC VIEW

WELDED COMMERCIAL SPLICE ALTERNATE

* Interrupt welds 1/4" from end of web and/or each flange.

** Remove portions of backup plates that extend outside the flanges.

*** Weld size per pile shoe manufacturer (5/16" min.).

Note:
The steel H-piles shall be according to AASHTO M270 Grade 50.

PROFESSIONAL DESIGN FIRM LICENSE #184-001084

HANSON
Hanson Professional Services Inc.

JOB NO. 05R1532A
DATE 07/23/10
SHEET NO. 45
50 SHEETS

F.A.I. RTE.	SECTION	COUNTY	TOTAL SHEETS	SHEET NO.
280	81-1(HR)R	Rock Island	503	178

CONTRACT NO. 64815
ILLINOIS FED. AID PROJECT

STEEL H-PILE - DETAILS
STRUCTURE NUMBERS 081-0188 (S.B.) & 081-0189 (N.B.)

F-HP 11-1-09

LAYOUT	KRF/FLN	07/05/10
DRAWN	MDM/ADM	07/21/10
REVIEWED	KRF/FLN	07/21/10

07/20/2010
c:\pwidot\workfolder\d05\0588\64815-045-SI_P1.dgn

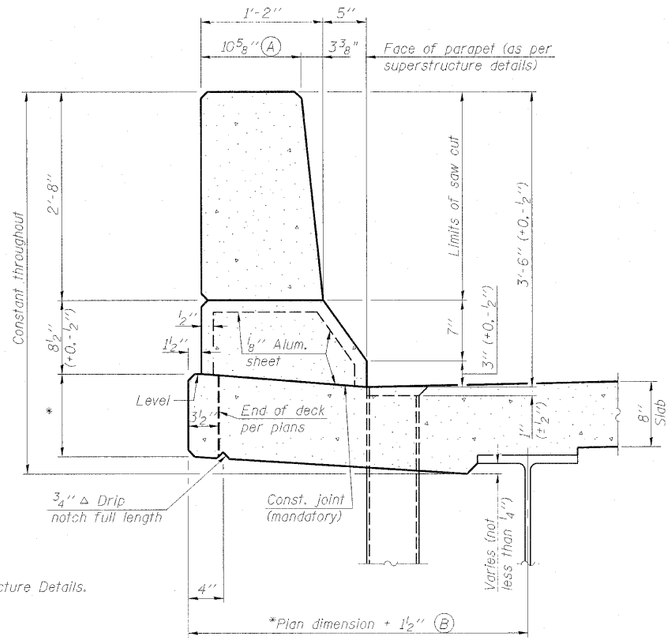

* See Superstructure Details.

SECTION
(Showing dimensions)

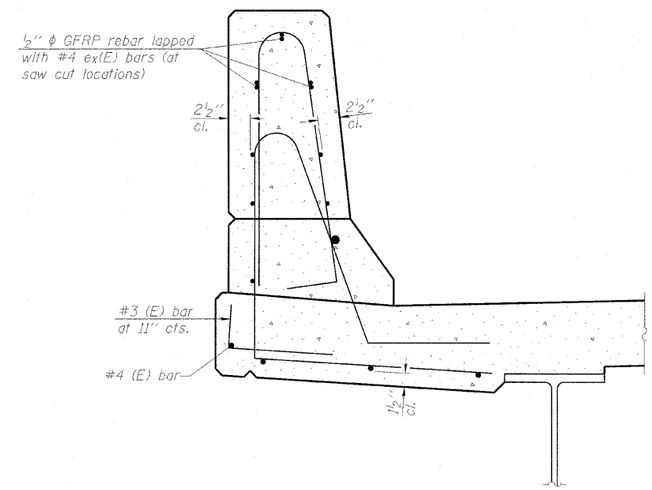

SECTION
(Showing reinforcement clearances for slip forming and additional reinforcement bars)

GENERAL NOTES

All dimensions shall remain the same as shown on superstructure details, except dimensions A and B which are to be revised as shown to provide additional clearance. Additional concrete needed to revise dimension A and B = 0.0191 cu. yds./ft. of parapet.

Place aluminum sheet in curb portion at and near piers. Full thickness saw cut at all joint locations in lieu of cork joint filler.

Steel superstructure shown. Other superstructure types similar.

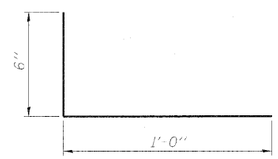

#3 (E) BAR

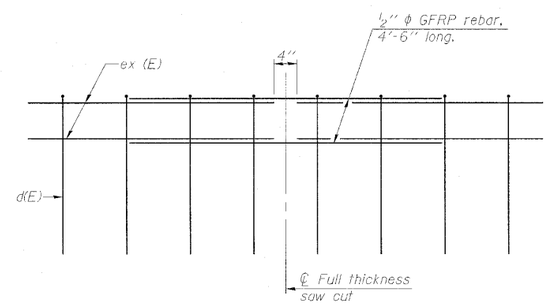

GFRP REBAR STIFFENING DETAIL
(Place as shown in parapet section at each parapet joint location.)

CONCRETE PARAPET SLIPFORMING OPTION
STRUCTURE NUMBERS 081-0188 (S.B.) & 081-0189 (N.B.)

PROFESSIONAL DESIGN FIRM LICENSE #184-001084

HANSON
Hanson Professional Services Inc.

JOB NO.	SHEET NO. 46	F.A.I. RTE.	SECTION	COUNTY	TOTAL SHEETS	SHEET NO.
05R1532A		280	81-1(HB)R	Rock Island	503	179
DATE 05/21/10	50 SHEETS			CONTRACT NO. 64815		
			ILLINOIS	FED. AID PROJECT		

LAYOUT	JRD/TLN	05/05/10
DRAWN	MJW/JDM	07/21/10
REVIEWED	JRD/TLN	07/21/10

09-28-2010
c:\pwidot.wsi\hdu_out_data\hdu\ms3532\D5\R83-F4815-D40-Parx_Slipform.dgn

Illinois Department of Transportation
Division of Highways
IDOT

SOIL BORING LOG

Page 1 of 2

Date 6/5/03

ROUTE FAI 280 DESCRIPTION P92-045-02 1.0 m. E. of Mississippi River - IL 92 over I-280 LOGGED BY C. Jenkins

SECTION 81 HB LOCATION Blackhawk Twp. - 16 SW, SE, SEC., TWP. 17N, RNG. 2W

COUNTY Rock Island DRILLING METHOD Hollow Stem Auger HAMMER TYPE B-53 Diedrich Automatic

STRUCT. NO. 081-0070, 71
Station 500+00

BORING NO. B-1
Station 499+63
Offset 73.00ft Rt CL of Median
Ground Surface Elev. 564.7 ft

Surface Water Elev. None ft
Stream Bed Elev. None ft

Groundwater Elev.:
First Encounter 551.7 ft ▼
Upon Completion Wash ft
After ___ Hrs. ___ ft

Description	Elev.	Depth (ft)	Blows (/6")	UCS Qu (tsf)	Moist (%)
MEDIUM brown SANDY LOAM				0.5 P	17
	561.70				
STIFF red/brown SILTY CLAY			3 3 3	1.3 B	24
	560.20	-5			
STIFF pink/brown CLAY			2 3 4	1.8 B	31
	557.20				
MEDIUM tan/brown SAND			1 3 7		
	555.20	-10			
MEDIUM tan SAND			5 4 6		
	552.70				
LOOSE tan medium grained SAND			1 3 4		
	550.20	-15			
Same as above			2 4 5		
	547.70				
MEDIUM tan medium grained SAND			6 5 7		
	545.20	-20			
Wash MEDIUM tan fine grained SAND			5 5 9		
	542.70				
MEDIUM tan fine grained SAND			3 4 7		
	540.20	-25			
Wash Same as above			2 4 7		
	537.70				
MEDIUM tan SAND & GRAVEL			4 4 6		
	535.20	-30			
Wash MEDIUM tan coarse grained SAND			2 7 12		
	532.70				
	530.20	-35			
Wash MEDIUM tan SANDY GRAVEL			5 7 13		
	527.70				
	525.20	-40			

The Unconfined Compressive Strength (UCS) Failure Mode is indicated by (B-Bulge, S-Shear, P-Penetrometer)
The SPT (N value) is the sum of the last two blow values in each sampling zone (AASHTO T206)

BBS, from 137 (Rev. 8-99)

Illinois Department of Transportation
Division of Highways
IDOT

SOIL BORING LOG

Page 2 of 2

Date 6/5/03

ROUTE FAI 280 DESCRIPTION P92-045-02 1.0 m. E. of Mississippi River - IL 92 over I-280 LOGGED BY C. Jenkins

SECTION 81 HB LOCATION Blackhawk Twp. - 16 SW, SE, SEC., TWP. 17N, RNG. 2W

COUNTY Rock Island DRILLING METHOD Hollow Stem Auger HAMMER TYPE B-53 Diedrich Automatic

STRUCT. NO. 081-0070, 71
Station 500+00

BORING NO. B-1
Station 499+63
Offset 73.00ft Rt CL of Median
Ground Surface Elev. 564.7 ft

Surface Water Elev. None ft
Stream Bed Elev. None ft

Groundwater Elev.:
First Encounter 551.7 ft ▼
Upon Completion Wash ft
After ___ Hrs. ___ ft

Description	Elev.	Depth (ft)	Blows (/6")	UCS Qu (tsf)	Moist (%)
Wash VERY DENSE tan SANDY GRAVEL			100/8" PEN		
	522.70				
End of Boring					
		-45			
		-50			
		-55			
		-60			

The Unconfined Compressive Strength (UCS) Failure Mode is indicated by (B-Bulge, S-Shear, P-Penetrometer)
The SPT (N value) is the sum of the last two blow values in each sampling zone (AASHTO T206)

BBS, from 137 (Rev. 8-99)

PROFESSIONAL DESIGN FIRM LICENSE #184-001084

HANSON
Hanson Professional Services Inc.

JOB NO. 05R1532A
DATE 07/23/10

SHEET NO. 47
50 SHEETS

BORING LOGS
STRUCTURE NUMBERS 081-0188 (S.B.) & 081-0189 (N.B.)

F.A.I. RTE.	SECTION	COUNTY	TOTAL SHEETS	SHEET NO.
280	81-1(HB)R	Rock Island	503	180

CONTRACT NO. 64815

ILLINOIS FED. AID PROJECT

LAYOUT	JKB/F.N.	04/06/10
DRAWN	MCM/JDM	07/21/10
REVIEWED	JKB/F.N.	07/21/10

07/23/2010
c:\pwf\ps_wrk\vlo_rot_delete\rotd3592\d80188-64815-047-Boring_1.dgn

Illinois Department of Transportation
Division of Highways
IDOT

SOIL BORING LOG

Page 1 of 2

Date 6/12/05

ROUTE FAI 280 DESCRIPTION P92-045-02 1.0 m. E. of Mississippi River - IL 92 over I-280 LOGGED BY C. Jenkins

SECTION 81 HB LOCATION Blackhawk Twp. - 18 SW, SE, SEC. , TWP. 17N, RNG. 2W

COUNTY Rock Island DRILLING METHOD Hollow Stem Auger HAMMER TYPE B-53 Diedrich Automatic

STRUCT. NO.
Station

BORING NO. B-2
Station 500+35
Offset 68.00ft Lt CL
Ground Surface Elev. 585.4 ft

Surface Water Elev. None ft
Stream Bed Elev. None ft

Groundwater Elev.:
First Encounter 547.9 ft ▼
Upon Completion Wash ft
After ___ Hrs. ___ ft

Description	Elev.	DEPTH (ft)	BLOWS (/6")	UCS Qu (tsf)	MOIST (%)
MEDIUM brown SANDY LOAM	562.90			0.8 P	11
VERY STIFF brown SILTY CLAY with SAND lenses	560.90		5 5 6	2.3 B	17
LOOSE brown fine SAND	558.90	-5	3 4 5		
VERY LOOSE brown fine SAND	555.90		0 1 1		
VERY STIFF brown SILTY CLAY with SAND lenses	553.40	-10	1 3 5	2.5 B	25
MEDIUM brown coarse grained SAND	551.40		4 8 5		
Same as above	548.90	-15	4 8 9		
LOOSE brown fine grained SAND	546.40	-20	4 5 1		
Wash MEDIUM tan/brown coarse grained SAND	543.90		7 6 6		
LOOSE tan/brown coarse grained SAND	541.40		2 2 5		
Same as above	538.90	-25	2 4 5		
	536.40				
Wash MEDIUM tan coarse grained SAND	533.90	-30	4 4 12		
	531.40				
Wash Medium	528.90	-35	5 7 12		
	526.40	-40			

The Unconfined Compressive Strength (UCS) Failure Mode is indicated by (B-Bulge, S-Shear, P-Penetrometer)
The SPT (N value) is the sum of the last two blow values in each sampling zone (AASHTO T206)

BBS, from 137 (Rev. 8-99)

Illinois Department of Transportation
Division of Highways
IDOT

SOIL BORING LOG

Page 2 of 2

Date 6/12/05

ROUTE FAI 280 DESCRIPTION P92-045-02 1.0 m. E. of Mississippi River - IL 92 over I-280 LOGGED BY C. Jenkins

SECTION 81 HB LOCATION Blackhawk Twp. - 16 SW, SE, SEC. , TWP. 17N, RNG. 2W

COUNTY Rock Island DRILLING METHOD Hollow Stem Auger HAMMER TYPE B-53 Diedrich Automatic

STRUCT. NO.
Station

BORING NO. B-2
Station 500+35
Offset 68.00ft Lt CL
Ground Surface Elev. 585.4 ft

Surface Water Elev. None ft
Stream Bed Elev. None ft

Groundwater Elev.:
First Encounter 547.9 ft ▼
Upon Completion Wash ft
After ___ Hrs. ___ ft

Description	Elev.	DEPTH (ft)	BLOWS (/6")	UCS Qu (tsf)	MOIST (%)
Wash VERY DENSE brown SANDY GRAVEL with LIMESTONE fragments	523.90		28 40 60		
Wash Same as above	521.40		35 39 38		
Wash Same as above	518.90	-45	42 52 26		
End of Boring		-50			
		-55			
		-60			

The Unconfined Compressive Strength (UCS) Failure Mode is indicated by (B-Bulge, S-Shear, P-Penetrometer)
The SPT (N value) is the sum of the last two blow values in each sampling zone (AASHTO T206)

BBS, from 137 (Rev. 8-99)

BORING LOGS
STRUCTURE NUMBERS 081-0188 (S.B.) & 081-0189 (N.B.)

PROFESSIONAL DESIGN FIRM LICENSE #184-001084

HANSON
Hanson Professional Services Inc.

JOB NO. 05R1532A
DATE 07/23/10
SHEET NO. 48
50 SHEETS

F.A.I. RTE.	SECTION	COUNTY	TOTAL SHEETS	SHEET NO.
280	81-1(HB)R	Rock Island	503	181
		CONTRACT NO. 64815		
		ILLINOIS FED. AID PROJECT		

LAYOUT	JKD/FLN	04/05/10
DRAWN	KGM/JDM	07/21/10
REVIEWED	JKD/FLN	07/21/10

07/23/2010
c:\pwidgs_work\kda_nd_ildot\dms15595\D0589-64815-048-Boring_2.dgn

Illinois Department of Transportation
Division of Highways
IDOT

SOIL BORING LOG

Page 1 of 2

Date 6/16/03

ROUTE FAI 280 DESCRIPTION P92-045-02 1.0 m. E. of Mississippi River - IL 92 over I-280 LOGGED BY C. Jenkins

SECTION 81 HB LOCATION Blackhawk Twp. - 16 SW, SE, SEC. , TWP. 17N, RNG. 2W

COUNTY Rock Island DRILLING METHOD Hollow Stem Auger HAMMER TYPE B-53 Diedrich Automatic

STRUCT. NO.
Station

BORING NO. B-3
Station 501+65
Offset 1.00ft Lt Ctr of Median
Ground Surface Elev. 588.0 ft

Surface Water Elev. None ft
Stream Bed Elev. None ft

Groundwater Elev.:
First Encounter 550.0 ft ▼
Upon Completion Wash ft
After ___ Hrs. ___ ft

Description	Elev.	DEPTH (ft)	BLOWS (/6")	UCS Qu (tsf)	MOIST (%)
MEDIUM brown SANDY LOAM				0.6 P	13
	585.00				
VERY STIFF black SANDY LOAM			7 9 11	2.9 S	11
	583.50	-0			
MEDIUM black SANDY LOAM			2 3 4	0.8 S	15
	581.00				
MEDIUM black SANDY LOAM with SAND lenses			2 5 4	0.7 S	12
	578.50	-10			
MEDIUM black SILTY LOAM with SAND lenses			2 5 6	0.5 S	21
	575.50				
LOOSE dirty gray/black SAND			2 2 4		
	573.50	-15			
MEDIUM gray fine to medium grained SAND			2 6 7		
	571.00				
MEDIUM tan medium grained SAND			7 6 5		
	568.50	-20			
STIFF tan SANDY LOAM			2 6 7	1.6 S	13
	566.00				
VERY STIFF gray/green CLAY with SAND lenses			4 6 7	2.5 S	27
	563.50	-25			
MEDIUM gray SILTY LOAM with ORGANICS			3 2 4	0.5 P	24
	561.00				
STIFF black SILTY LOAM			1 3 8	1.4 P	18
	558.00	-30			
LOOSE tan fine grained SAND			2 3 4		
	556.00				
Same as above			1 2 4		
	553.50	-35			
MEDIUM tan medium to coarse grained SAND			2 5 10		
	551.00				
LOOSE tan coarse grained SAND			2 4 5		
	548.50	-40			

The Unconfined Compressive Strength (UCS) Failure Mode is indicated by (B-Bulge, S-Shear, P-Penetrometer)
The SPT (N value) is the sum of the last two blow values in each sampling zone (AASHTO T206)

BBS, from 137 (Rev. 8-99)

Illinois Department of Transportation
Division of Highways
IDOT

SOIL BORING LOG

Page 2 of 2

Date 6/16/03

ROUTE FAI 280 DESCRIPTION P92-045-02 1.0 m. E. of Mississippi River - IL 92 over I-280 LOGGED BY C. Jenkins

SECTION 81 HB LOCATION Blackhawk Twp. - 16 SW, SE, SEC. , TWP. 17N, RNG. 2W

COUNTY Rock Island DRILLING METHOD Hollow Stem Auger HAMMER TYPE B-53 Diedrich Automatic

STRUCT. NO.
Station

BORING NO. B-3
Station 501+65
Offset 1.00ft Lt Ctr of Median
Ground Surface Elev. 588.0 ft

Surface Water Elev. None ft
Stream Bed Elev. None ft

Groundwater Elev.:
First Encounter 550.0 ft ▼
Upon Completion Wash ft
After ___ Hrs. ___ ft

Description	Elev.	DEPTH (ft)	BLOWS (/6")	UCS Qu (tsf)	MOIST (%)
LOOSE tan coarse grained SAND			1 2 5		
	546.00				
Begin Wash MEDIUM tan SANDY GRAVEL			7 9 12		
	543.50	-45			
Wash Same as above			4 9 9		
	541.00				
	538.50	-50			
Wash Same as above			3 4 6		
	536.00				
	533.50	-55			
MEDIUM tan SANDY GRAVEL			15 15 15		
	531.00				
	528.50	-60			
Wash MEDIUM tan coarse grained SAND			5 8 11		
	526.00				
	523.50	-65			
Wash VERY DENSE tan coarse SAND with LIMESTONE fragments			20 25 38		
	521.00				
Wash VERY DENSE tan well-cemented SANDY GRAVEL			25 50/11" PEN		
	518.50	-70			
VERY DENSE tan well-cemented SANDY GRAVEL			47 37 27		
	516.00				
End of Boring					
		-75			
		-80			

The Unconfined Compressive Strength (UCS) Failure Mode is indicated by (B-Bulge, S-Shear, P-Penetrometer)
The SPT (N value) is the sum of the last two blow values in each sampling zone (AASHTO T206)

BBS, from 137 (Rev. 8-99)

BORING LOGS
STRUCTURE NUMBERS 081-0188 (S.B.) & 081-0189 (N.B.)

PROFESSIONAL DESIGN FIRM LICENSE #184-001084

HANSON
Hanson Professional Services Inc.

JOB NO.	SHEET NO. 49	F.A.I. RTE.	SECTION	COUNTY	TOTAL SHEETS	SHEET NO.
05R1532A	50 SHEETS	280	81-1(HB)R	Rock Island	503	182
DATE 07/23/10		CONTRACT NO. 64815				
		ILLINOIS FED. AID PROJECT				

LAYOUT KRAVTLN 04/05/10
DRAWN MCM/JIM 07/21/10
REVIEWED KRAVTLN 07/21/10

07/22/2010
c:\pwidot\workdo_not_delete\msd3692\G80089-64815-049-Boring_3.dgn

Illinois Department of Transportation
Division of Highways
IDOT

SOIL BORING LOG

Page 1 of 2

Date 6/23/03

ROUTE FAI 280 DESCRIPTION P92-045-02 1.0 m. E. of Mississippi River - IL 92 over I-280 LOGGED BY C. Jenkins

SECTION 81 HB LOCATION Blackhawk Twp. - 18 SW, SE, SEC., TWP. 17N, RNG. 2W

COUNTY Rock Island DRILLING METHOD Hollow Stem Auger HAMMER TYPE B-53 Diedrich Automatic

STRUCT. NO.
Station

BORING NO. B-4
Station 498+30
Offset 3.00ft Lt Ctr of Median
Ground Surface Elev. * 99.0 ft

Surface Water Elev. None ft
Stream Bed Elev. None ft

Groundwater Elev.:
First Encounter 61.0 ft ▼
Upon Completion Wash ft
After ___ Hrs. ___ ft

Description	Elev.	DEPTH (ft)	BLOWS (/6")	UCS Qu (tsf)	MOIST (%)
STIFF brown SANDY LOAM	99.00		3 5 7	1.5 P	7
STIFF black SILTY LOAM with SAND lenses	96.00		3 7 10	1.8 S	13
MEDIUM black SILTY LOAM with SAND lenses	94.50	-5	2 2 5	0.7 S	16
VERY STIFF black SILTY CLAY with SAND lenses	92.00		4 5 6	2.1 S	17
MEDIUM tan fine grained SAND	89.00	-10	2 4 7		
MEDIUM tan fine grained dirty SAND	87.00		2 3 9		
STIFF black SANDY LOAM	84.00	-15	5 11 11	1.6 S	11
VERY STIFF brown SANDY LOAM	82.00		8 10 10	2.5 S	11
	79.50	-20			
VERY STIFF brown SANDY LOAM with SAND lenses	77.00		8 12 6	2.5 S	13
VERY STIFF gray SILTY LOAM	74.50	-25	6 9 12	2.5 S	12
VERY STIFF gray/black SILTY CLAY with SAND Lenses	71.50		6 8 13	3.7 B	18
LOOSE brown fine dirty SAND	69.00	-30	1 1 4		
STIFF pink CLAY	66.50		1 3 5	2.0 B	44
MEDIUM tan fine grained SAND	64.50	-35	0 8 11		
MEDIUM tan fine SAND	62.00		4 7 10		
MEDIUM tan medium grained SAND with some GRAVEL	59.50	-40	2 4 8		

The Unconfined Compressive Strength (UCS) Failure Mode is indicated by (B-Bulge, S-Shear, P-Penetrometer)
The SPT (N value) is the sum of the last two blow values in each sampling zone (AASHTO T206)

BBS, from 137 (Rev. 8-99)

* Elevation 99.0 on Soil Boring Log for Boring B-4 corresponds to Elevation 586.8 in the field.

Illinois Department of Transportation
Division of Highways
IDOT

SOIL BORING LOG

Page 2 of 2

Date 5/23/03

ROUTE FAI 280 DESCRIPTION P92-045-02 1.0 m. E. of Mississippi River - IL 92 over I-280 LOGGED BY C. Jenkins

SECTION 81 HB LOCATION Blackhawk Twp. - 18 SW, SE, SEC., TWP. 17N, RNG. 2W

COUNTY Rock Island DRILLING METHOD Hollow Stem Auger HAMMER TYPE B-53 Diedrich Automatic

STRUCT. NO.
Station

BORING NO. B-4
Station 498+30
Offset 3.00ft Lt Ctr of Median
Ground Surface Elev. 99.0 ft

Surface Water Elev. None ft
Stream Bed Elev. None ft

Groundwater Elev.:
First Encounter 61.0 ft ▼
Upon Completion Wash ft
After ___ Hrs. ___ ft

Description	Elev.	DEPTH (ft)	BLOWS (/6")	UCS Qu (tsf)	MOIST (%)
MEDIUM tan medium grained SAND	57.00		3 5 9		
Begin Wash MEDIUM tan SANDY GRAVEL	54.50	-45	7 13 17		
MEDIUM tan SANDY GRAVEL	52.00		5 6 6		
	49.50	-50			
MEDIUM tan SANDY GRAVEL	47.00		6 9 12		
	44.50	-55			
Wash DENSE tan SANDY GRAVEL	42.00		7 14 18		
	39.50	-60			
Wash VERY DENSE tan SANDY GRAVEL with LIMESTONE fragments	37.00		18 00/10" PEN		
Wash VERY DENSE tan/gray dirty SAND & GRAVEL	34.50	-65	38 52 00/11" PEN		
Wash VERY DENSE tan SANDY GRAVEL	32.00		38 00/11 1/2" PEN		
End of Boring		-70			
		-75			
		-80			

The Unconfined Compressive Strength (UCS) Failure Mode is indicated by (B-Bulge, S-Shear, P-Penetrometer)
The SPT (N value) is the sum of the last two blow values in each sampling zone (AASHTO T206)

BBS, from 137 (Rev. 8-99)

BORING LOGS
STRUCTURE NUMBERS 081-0188 (S.B.) & 081-0189 (N.B.)

PROFESSIONAL DESIGN FIRM LICENSE #184-001084

HANSON
Hanson Professional Services Inc.

JOB NO.	SHEET NO.	F.A.I. RTE.	SECTION	COUNTY	TOTAL SHEETS	SHEET NO.
05R1532A	50 SHEETS	280	81-1(HB)R	Rock Island	503	183
DATE 07/23/10				CONTRACT NO. 64815		
			ILLINOIS FED. AID PROJECT			

LAYOUT	JRB/FLN	06/09/10
DRAWN	WDM/JDM	07/21/10
REVIEWED	JRB/FLN	07/21/10

07/22/2010
c:\pwidot\workdir\dot_net_deploy\ed3692\d0189-b1815-000-Bor1rpt_1.dgn

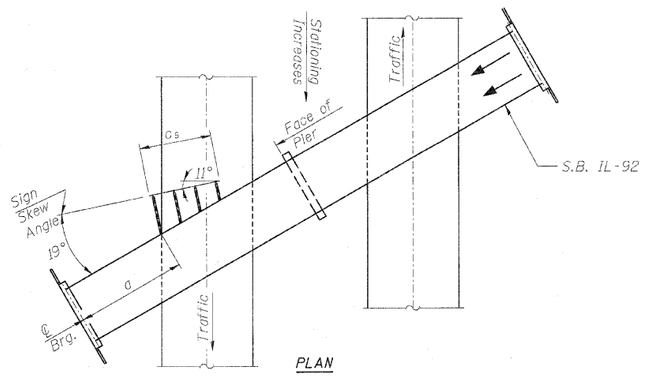

SIGN LAYOUT SKETCH (S.B. IL-92 LANES)

Note: Sign is skewed 11° off line perpendicular to ℄ S.B. lanes

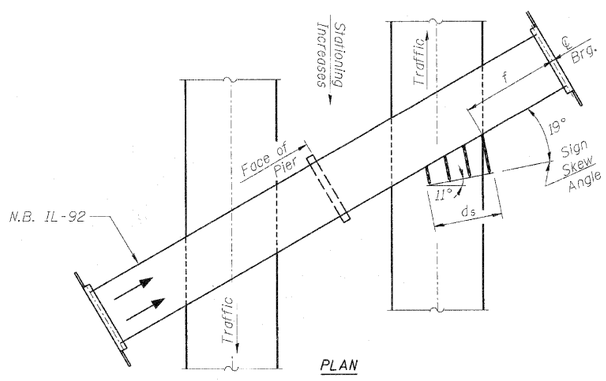

SIGN LAYOUT SKETCH (N.B. IL-92 LANES)

Note: Sign is skewed 11° off line perpendicular to ℄ N.B. lanes

Structure Number	Sign Skew Angle	Bridge Station	Bridge Structure Number	Contract Route Designation	a	c_s	d_s	f	g	ℓ min.	ℓ max.	k min.	k max.
2B081S092L	19°	1392+06.90	081-0188 (S.B.)	F.A.I. 280	76'-7"	19'-0"	X	X	5'-8"	1'-1¼"	6'-11½"	4'-1⅝"	9'-11⅞"
2B081S092R	19°	1391+69.94	081-0189 (N.B.)	F.A.I. 280	X	X	18'-0"	77'-1¼"	5'-4"	1'-2⅞"	6'-9"	4'-3¼"	9'-9⅜"

Dimensions a, f & g may vary as approved by the Engineer.

"a" and "f" are measured along ℄ of facia beam/girder to center of bracket.

c_s & d_s = sign width

GENERAL NOTES

SPECIFICATIONS:

DESIGN: AASHTO Standard Specifications for Structural Supports for Highway Signs, Luminaires and Traffic Signals. ("AASHTO Specifications")

CONSTRUCTION: Current (at time of letting) Illinois Department of Transportation Standard Specifications for Road and Bridge Construction, Supplemental Specifications and Special Provisions. ("Standard Specifications")

LOADING: 90 M.P.H. WIND VELOCITY

WALKWAY LOADING: Dead load plus 500 lbs. concentraied live load.

MINIMUM CLEARANCE: 3" greater than bridge members at all locations. (All Obstructions)

WELDING: All welds to be continuous unless otherwise shown. All welding to be done in accordance with current AWS D1.1 Structural Welding Code (Steel) and the Standard Specificiations.

MATERIALS: All Structural Steel Pipe shall be ASTM A53 Grade B with a minimum yield of 35,000 p.s.i., or A500 Grade B or C with a minimum yield of 46,000 p.s.i. If A500 pipe is substituted for A53, then the outside diameter shall be as detailed and wall thickness greater than or equal to A53.

All Structural Steel Plates and Shapes shall conform to AASHTO M270 Gr. 36, Gr. 50 (M183, M223 Gr. 50,).

HIGH STRENGTH BOLTS: All bolts, washers, nuts and locknuts shall satisfy the requirements of ASTM designation A307 unless noted as "H.S." which shall require AASHTO M164 (A325), ASTM A449, or approved alternate. All fasteners shall be hot dip galvanized per AASHTO M232 unless otherwise specified.

GALVANIZING: All Steel Grating, Plates, Shapes and Pipe shall be Hot Dip Galvanized after fabrication in accordance with AASHTO M111. Painting is not permitted.

ANCHOR RODS: All-threaded rod conforming to ASTM A307, ¾" ϕ x 12" long, each with one plate washer and locknut and be hot dip galvanized per AASHTO M232. They shall be either cast into the concrete or epoxy grouted in accordance with Section 584 of the Standard Specifications. Minimum embedment in concrete shall be 9".

TOTAL BILL OF MATERIAL

OVERHEAD SIGN STRUCTURE - BRIDGE MOUNTED	Foot	37
SIGN PANEL, TYPE 3	S.F.	352

BRIDGE MOUNT SIGN STRUCTURES
GENERAL PLAN AND NOTES
STRUCTURE NUMBERS 081-0188 (S.B.) & 081-0189 (N.B.)

PROFESSIONAL DESIGN FIRM LICENSE #184-001084

HANSON
Hanson Professional Services Inc.

JOB NO. 05R1532A
DATE 07/23/10
SHEET NO. 1
3 SHEETS

F.A.I. RTE.	SECTION	COUNTY	TOTAL SHEETS	SHEET NO.
280	81-1(HB)R	Rock Island	503	184

CONTRACT NO. 64815

ILLINOIS FED. AID PROJECT

LAYOUT	BMC	05/19/10
DRAWN	BMC	05/19/10
REVIEWED	SWK	05/25/10

07-22-2010
c:\pwidot.work\co_hpf_delta\proj\5082C001086-64815 C01-Sign_Structures.dgn

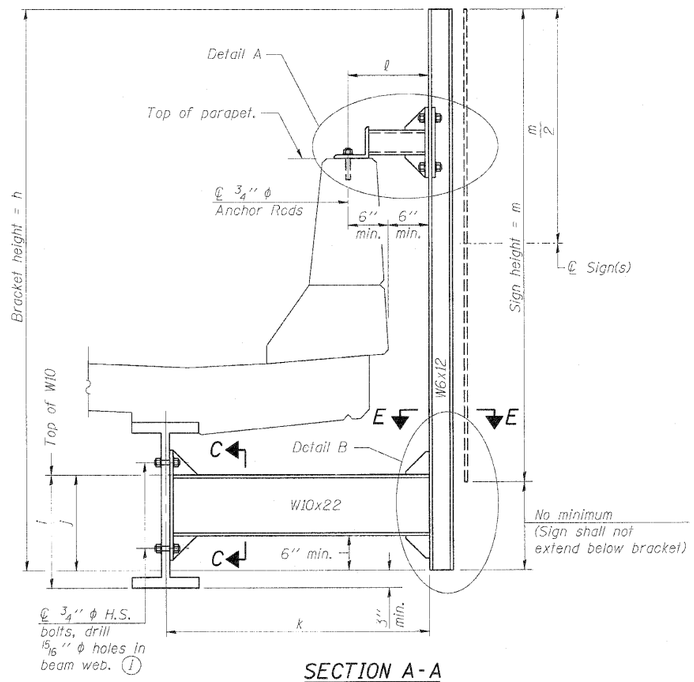

SECTION A-A

Details for mounting to steel beam or girder
There is no lights or walkways

Structure Number	Station	h	i	j	k max.	ℓ max.	m
	1392+06.90	9'-6"	2'-6 3/4"	2'-1 1/8"	9-11 7/8"	6'-11 1/2"	9'-6"
	1391+69.94	9'-6"	2'-6 3/4"	2'-1 1/8"	9'-9 3/8"	6'-9"	9'-6"

For Details A & B, Sections C-C, and E-E, see Sheet 3 of 3.

(1) Holes in new steel members may be drilled in the fabrication shop or in the field.

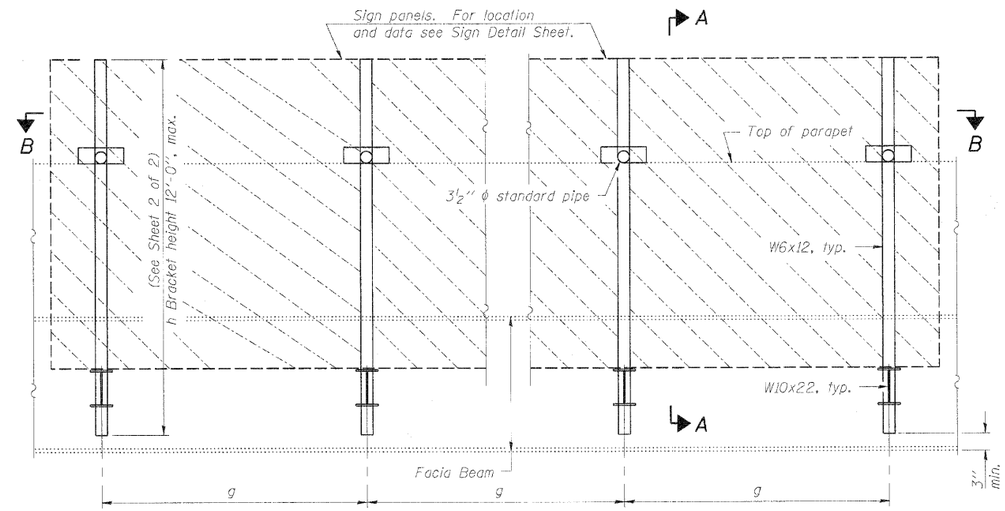

TYPICAL FRONT ELEVATION

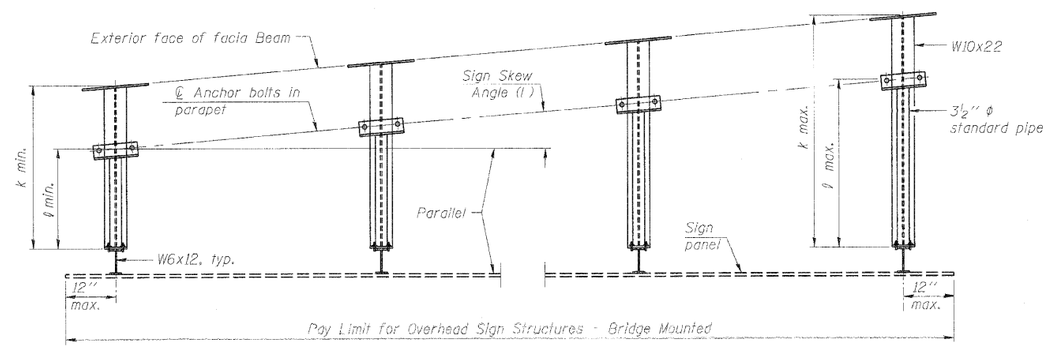

SECTION B-B

Notes:

Installations not within dimensional limits shown require special analysis for all components and must be submitted to the Bureau of Bridges and Structures for approval.

All holes in bridge beams or girders should be located in the middle half of the member. There shall be no holes drilled in the lower quarter of the member's depth. Proposed exceptions must be approved by the Bureau of Bridges and Structures.

The Engineer may adjust dimension "i" to meet the above condition and to keep the sign level.

BRIDGE MOUNT SIGN STRUCTURES
SECTION AND ELEVATION
STRUCTURE NUMBERS 081-0188 (S.B.) & 081-0189 (N.B.)

PROFESSIONAL DESIGN FIRM LICENSE #184-001084

HANSON
Hanson Professional Services Inc.

JOB NO. 05R1532A
DATE 07/23/10
SHEET NO. 2
3 SHEETS

F.A.I. RTE.	SECTION	COUNTY	TOTAL SHEETS	SHEET NO.
280	81-1(HB)R	Rock Island	503	185

CONTRACT NO. 64815

ILLINOIS FED. AID PROJECT

LAYOUT	SWC	05/19/10
DRAWN	SWC	05/19/10
REVIEWED	SMK	05/25/10

07/23/2010
c:\wsdot_ws\Vars_not_deleted\dms13592\GB1089-64815-002-Sign_Structures.dgn

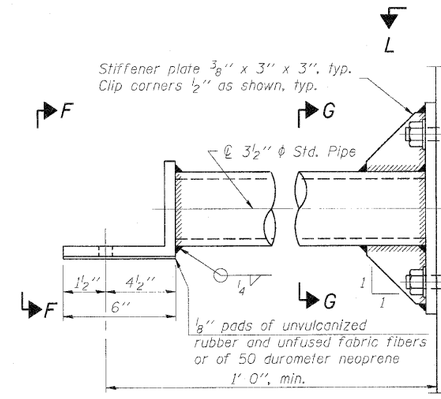

DETAIL A

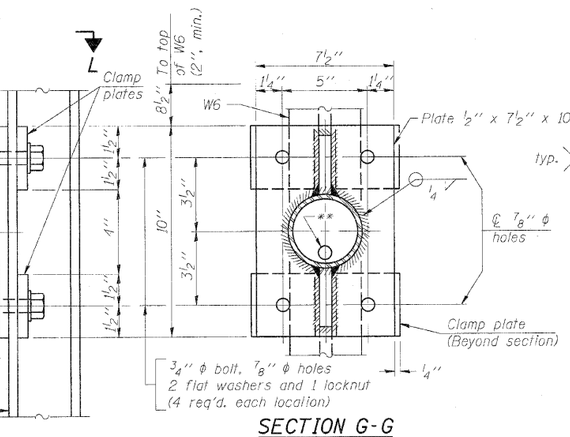

SECTION G-G

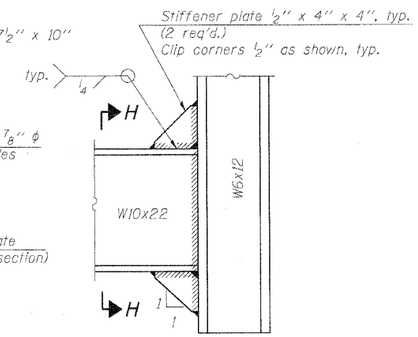

DETAIL B - WELDED W10x22 TO W6x12 CONNECTION

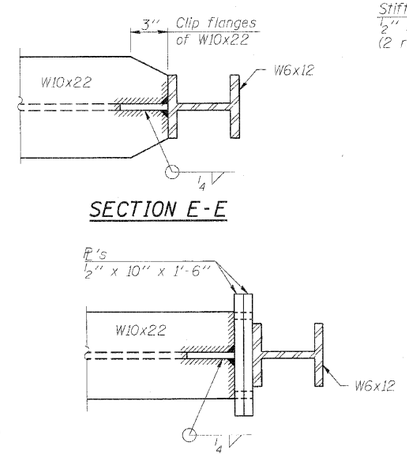

SECTION E-E

SECTION K-K

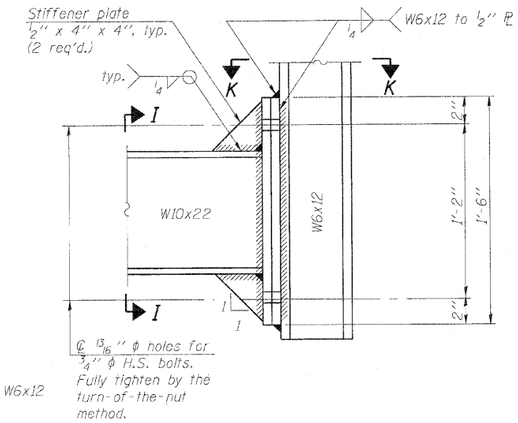

DETAIL B - ALTERNATE BOLTED W10x22 TO W6x12 CONNECTION

Alternate may be substituted by contractor to facilitate construction or galvanizing, especially on long struts for skewed bridges.

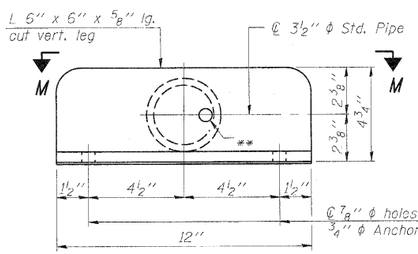

VIEW F-F

** 13/16" ϕ holes for galvanizing. After galvanizing, install 7/8" ϕ A307 hot-dip galvanized bolt to close hole in angle. (No bolt required in 1/2" plate.)

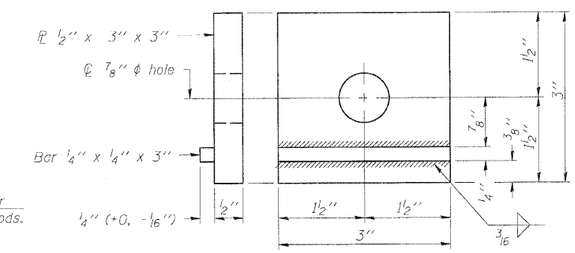

CLAMP PLATE DETAILS

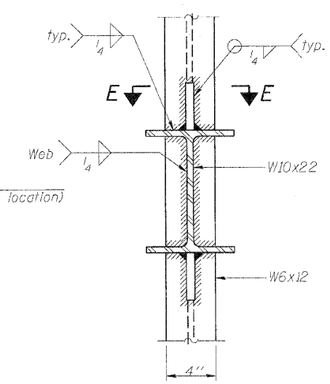

SECTION H-H

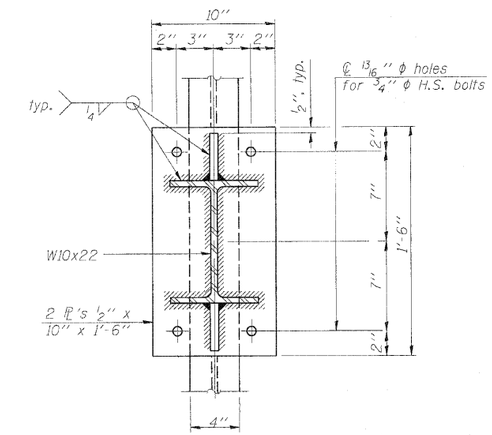

SECTION I-I

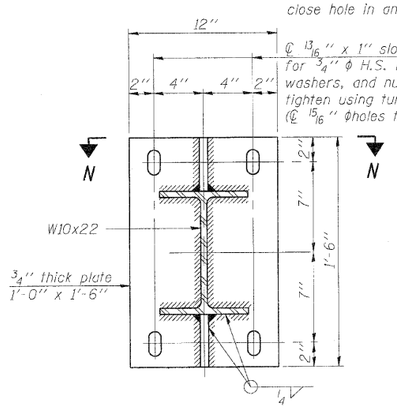

SECTION C-C

Steel beam or girder connection plate details

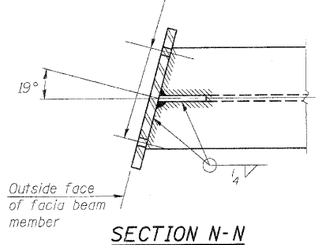

SECTION N-N

Skewed connection detail for W10x22 to facia beam.

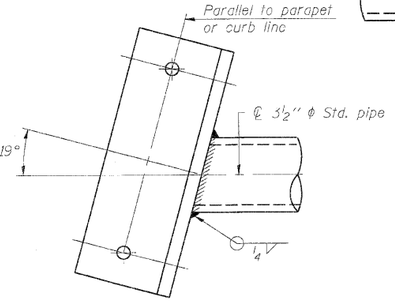

SECTION M-M

Skewed connection detail for 3 1/2" ϕ pipe to parapet.

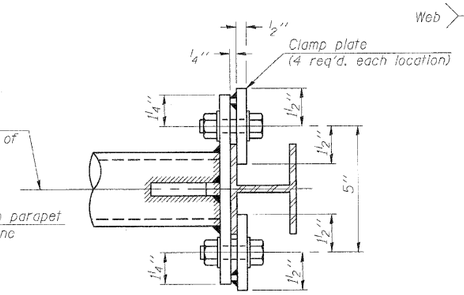

SECTION L-L

NUMBER	REVISION	DATE

BRIDGE MOUNT SIGN STRUCTURES
CONNECTION DETAILS
STRUCTURE NUMBERS 081-0188 (S.B.) & 081-0189 (N.B.)

PROFESSIONAL DESIGN FIRM LICENSE #184-001084

HANSON
Hanson Professional Services Inc.

JOB NO.	SHEET NO.	F.A.I. RTE.	SECTION	COUNTY	TOTAL SHEETS	SHEET NO.
05R1532A	3	280	81-1(HB)R	Rock Island	503	186
DATE 07/23/10	3 SHEETS	CONTRACT NO. 64815				
		ILLINOIS FED. AID PROJECT				

LAYOUT	GMC	05/19/10
DRAWN	SMC	05/19/10
REVIEWED	SMK	05/25/10

07-23-2010
c:\pwidot\workfrh not date\dist\1532\05R1086-6\R15-003_Sign_Structures.dgn

Bench Mark: Stainless steel plug in concrete ℄ median, Sta. 225+00.00, Elev. 579.90

Existing Structures: SN 081-0018 and SN 081-0019 originally built in 1964 as FAI 280, Section 81-1VB. Both structures were rehabilitated in 1988 as Section 81-1VBY. The existing structures consist of 3-span continuos non-composite steel beams 201'-9" long bk. to bk. abuts. and 36'-7" wide o. to o. supported on pile bent abutments and solid wall hammerhead piers on pile supported footings. The existing decks are to be removed and replaced and widened as composite construction. The substructures are to be widened as necessary. Traffic will be maintained using cross overs.

No Salvage

APPROVED
FOR STRUCTURAL ADEQUACY ONLY
Ralph E. Anderson (TFG)
ENGINEER OF BRIDGES AND STRUCTURES

SEISMIC DATA

Seismic Performance Category (SPC) = A
Horizontal Bedrock Acceleration Coefficient (A) = .034
Site Coefficient (S) = 1.0

LOADING HS20-44 & ALT.

DESIGN SPECIFICATIONS

AASHTO 2002

DESIGN STRESSES

EXISTING	PROPOSED
fc = 1,000 psi (Substructure)	fc' = 3,500 psi
fc = 1,400 psi (Superstructure)	fy = 60,000 psi (Reinforcement)
fs = 20,000 psi (Reinforcement)	fy = 36,000 psi (Structural Steel)
fs = 20,000 psi (Structural Steel, A36)	

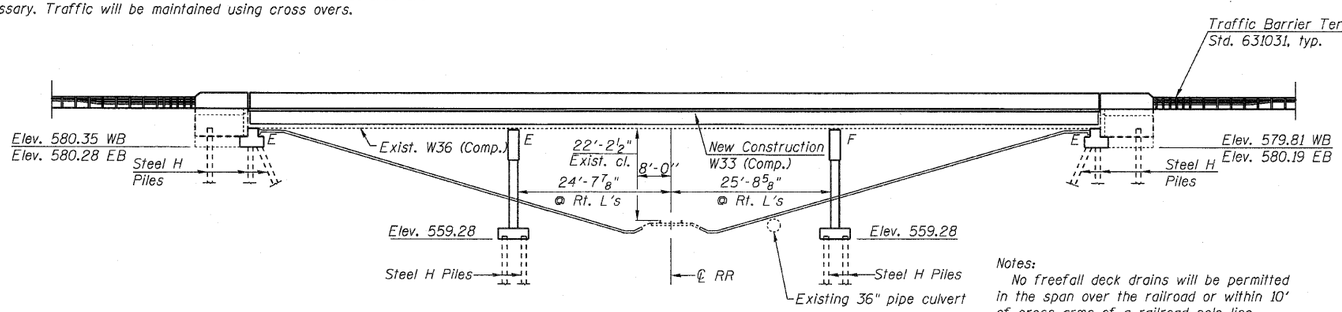

ELEVATION

Notes:
No freefall deck drains will be permitted in the span over the railroad or within 10' of cross arms of a railroad pole line.

* Existing Name Plate shall be cleaned and relocated next to new Name Plate. Cost included with Name Plates. See Sheet 2 of 55 for details of new name plates.

℄ FAI 280 CURVE DATA

Δ = 29°19'38"
D = 1°00'02"
T = 1498.51'
L = 2931.29'
E = 192.81'
R = 5726.77'
S.E. = 0.028 ft/ft
P.C. = Sta. 207+07.84
P.T. = Sta. 236+39.13

Superelevation transition
Beyond limits ofoverlay at West end.
Sta. 235+78.00 to Sta. 237+78.00

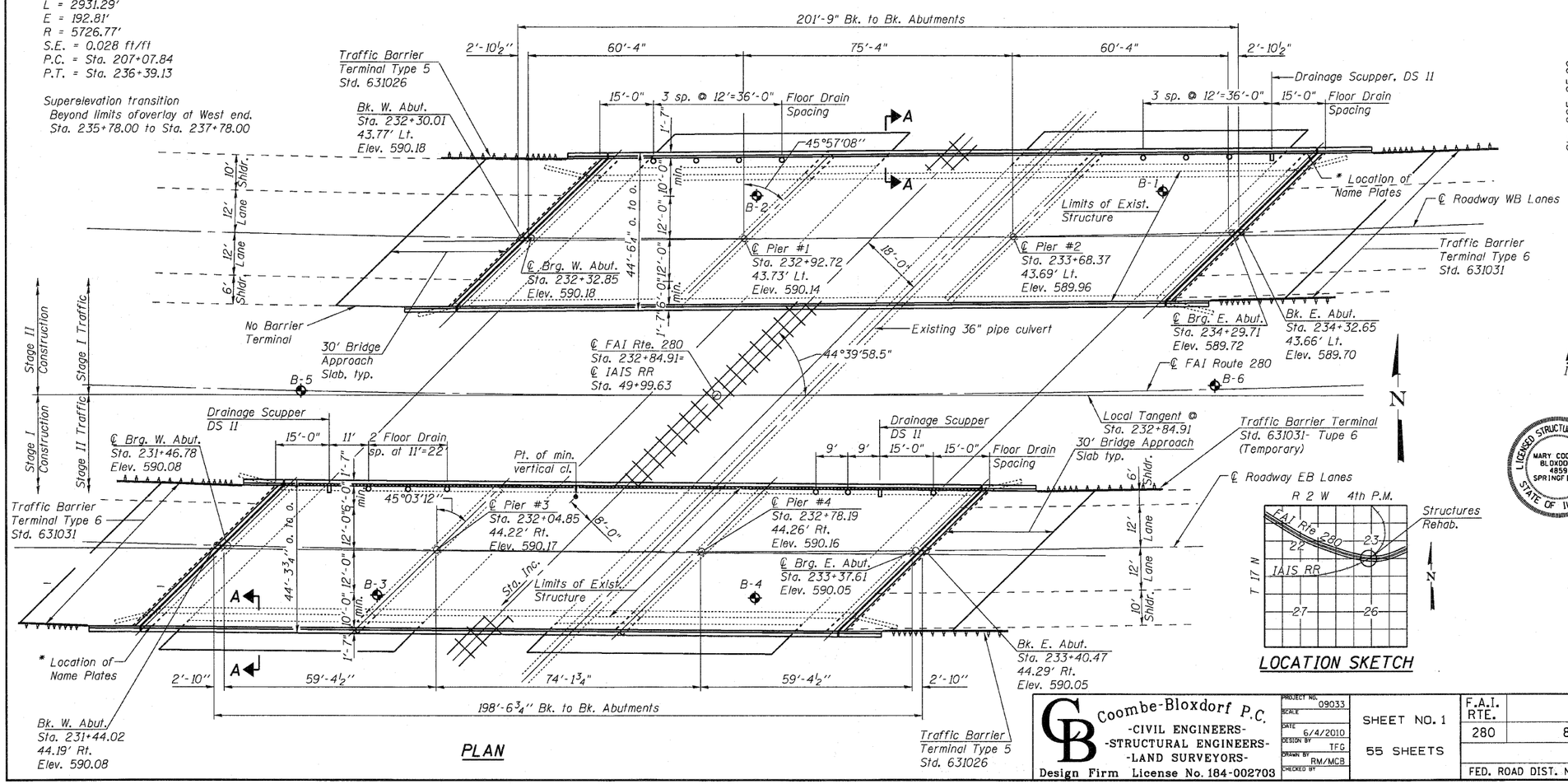

PLAN

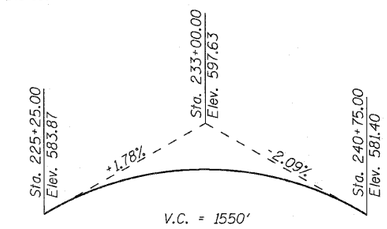

PROFILE GRADE

Along ℄ Survey FAI Route 280

STA.	ELEV.
49+00	562.58
49+50	562.93
50+00	563.37
50+50	563.64
51+00	563.94

EXIST. TOP OF RAIL ELEVATIONS

Iowa Interstate R.R. milepost = 85.28 Milan Branch

LOCATION SKETCH

LICENSED STRUCTURAL ENGINEER MARY COOMBE BLOXDORF 4859 SPRINGFIELD STATE OF ILLINOIS

Mary Coombe Bloxdorf

ILLINOIS STRUCTURAL NO. 4859
EXPIRES 11/30/10
DATE: 07/21/10

GENERAL PLAN
F.A.I. 280 OVER IAIS RAILROAD
F.A.I. 280, SEC. 81-1 (VB) R
ROCK ISLAND COUNTY
STATION 232+84.91
SN 081-0018 (EB), SN 081-0019 (WB)

Coombe-Bloxdorf P.C.
-CIVIL ENGINEERS-
-STRUCTURAL ENGINEERS-
-LAND SURVEYORS-
Design Firm License No. 184-002703

PROJECT NO. 09033
SCALE
DATE 6/4/2010
DESIGN BY TFG
DRAWN BY RM/MCB
CHECKED BY

SHEET NO. 1
55 SHEETS

F.A.I. RTE.	SECTION	COUNTY	TOTAL SHEETS	SHEET NO.
280	81-1 (VB) R	ROCK ISLAND	503	187
		CONTRACT NO. 64815		
FED. ROAD DIST. NO. 7	ILLINOIS	FED. AID PROJECT		

PLOT DATE = 7/21/2010
FILE NAME = ...081-0018-0019-64815-001-cpsx.dgn
PLOT SCALE = 166.6442 ' / IN.
USER NAME = OTC

TOTAL BILL OF MATERIAL

ITEM	UNIT	SUPER	SUB	TOTAL
Porous Granular Embankment, Special	Cu. Yd.		283	283
Concrete Removal	Cu. Yd.		44.1	44.1
Removal of Existing Concrete Deck No. 1	Each	2		2
Slope Wall Removal	Sq. Yd.			2773
Protective Shield	Sq. Yd.			837
Structure Excavation	Cu. Yd.		660	660
Floor Drains	Each	13		13
Concrete Structures	Cu. Yd.		305.6	305.6
Concrete Superstructure	Cu. Yd.	890.9		890.9
Bridge Deck Grooving	Sq. Yd.	2266		2266
Concrete Encasement	Cu. Yd.		5.6	5.6
Protective Coat	Sq. Yd.	2827		2827
Furnishing and Erecting Structural Steel Bridge No. 1	L. Sum	1		1
Cleaning and Painting Steel Bridge No. 1	L. Sum	1		1
Containment and Disposal of Lead Paint Cleaning Residues No. 1	L. Sum	1		1
Stud Shear Connectors	Each	9324		9324
Reinforcement Bars, Epoxy Coated	Pound	191160	39510	230670
Bar Splicers	Each		231	231
Bituminous Coated Aggregate Slopewall 6"	Sq. Yd.		3088	3088
Furnishing Steel Piles HP 10x42	Foot		1110	1110
Driving Piles	Foot		1110	1110
Name Plates	Each	2		2
Preformed Joint Strip Seal	Foot	243		243
Elastomeric Bearing Assembly, Type I	Each	4		4
Elastomeric Bearing Assembly, Type II	Each	2		2
Anchor Bolts, 1"	Each		16	16
Concrete Sealer	Sq. Ft.		848	848
Epoxy Crack Injection	Foot		6	6
Geocomposite Wall Drain	Sq. Yd.		141	141
Pipe Underdrains for Structures 4"	Foot		293	293
Drainage Scuppers, DS-11	Each	3		3
Structural Repair of Concrete (Depth Equal to or less than 5")	Sq. Ft.		20	20

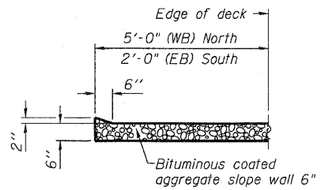

SECTION A-A

STATION 232+84.91
REBUILT BY
STATE OF ILLINOIS
F.A.I. RT. 280 SEC. 81-1 (VB) R
LOADING HS-20 & ALT.
STRUCTURE NO. 081-0018

EB NAME PLATE

See Std. 515001

STATION 232+84.91
REBUILT BY
STATE OF ILLINOIS
F.A.I. RT. 280 SEC. 81-1 (VB) R
LOADING HS-20 & ALT.
STRUCTURE NO. 081-0019

WB NAME PLATE

See Std. 515001

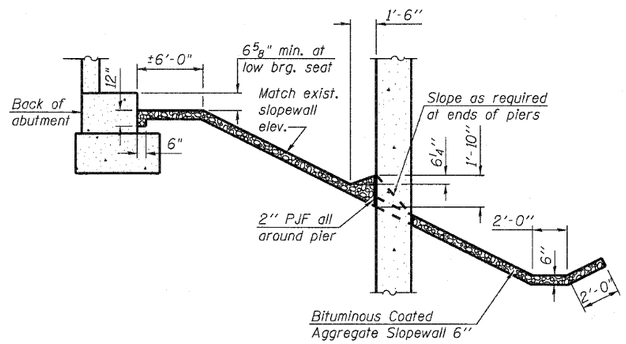

SECTION THROUGH BITUMINOUS COATED SLOPEWALL

All Rubbish and Loose Earth in the Slopes Shall be Removed and any Eroded Portion of the Slopes shall be Filled and Compacted with Suitable Materials to the Lines and Grades as Shown on the Plans and/or Directed by the Engineer.

INDEX OF SHEETS

GENERAL NOTES

Fasteners shall be AASHTO M164 Type 1, mechanically galvanized bolts. Bolts $\frac{7}{8}$-in. ϕ, holes $\frac{15}{16}$-in. ϕ, unless otherwise noted.

Calculated weight of Structural Steel =57,260 lbs.

No field welding is permitted except as specified in the contract documents.

The Contractor shall test the existing welds by non-destructive methods within 2 ft. of the end of the existing cover plates for cracks after removal of the existing concrete deck. Dye penetrant (PT), magnetic particle (MT), or other approved testing method shall be performed by qualified personnel approved by the Engineer. If cracks are found, report them to the Bureau of Bridges and Structures for disposition. The cost of testing is included in Removal of Existing Concrete Deck. The cost of crack repair, if necessary, will be paid for according to Article 109.04 of the Standard Specifications.

Reinforcement bars shall conform to the requirements of ASTM A 706 Gr 60. See Special Provisions.

Reinforcement bars designated (E) shall be epoxy coated.

Prior to pouring the new concrete deck, all heavy or loose rust, loose mill scale, and other loose or potentially detrimental foreign material shall be removed from the surfaces in contact with concrete. Tightly adhered paint may remain unless otherwise noted. Removal shall be accomplished by methods that will not damage the steel and the cost will be included in the pay item covering removal of the existing concrete.

As directed by the Engineer, existing construction accessories welded to the top flange of beams and girders shall be removed. The weld areas shall be ground flush and inspected for cracks using magnetic particle testing (MT) or dye penetrant testing (PT) by qualified personnel approved by the Engineer.

Any cracks that cannot be removed by grinding $\frac{1}{4}$ inch deep shall be identified and reported to the Bureau of Bridges and Structures for further disposition. The cost of removing welded accessories, grinding and inspecting weld areas and grinding cracks will be paid for according to Article 109.04 of the Standard Specifications.

If the Contractor elects to use cantilever forming brackets on the exterior beams or girders, the brackets shall be placed at the same locations as required for the hardwood blocks in Article 503.06(b) of the Standard Specifications. If additional cantilever forming brackets are required, hardwood blocking shall be wedged between the exterior and first interior beam at each of these additional bracket locations.

Plan dimensions and details relative to existing plans are subject to nominal construction variations. The Contractor shall field verify existing dimensions and details affecting new construction and make necessary approved adjustments prior to construction or ordering of materials. Such variations shall not be cause for additional compensation for a change in scope of the work, however, the Contractor will be paid for the quantity actually furnished at the unit price bid for the work.

Bearing seat surfaces shall be constructed or adjusted to the designated elevations within a tolerance of $\frac{1}{8}$ inch (0.01 ft.). Adjustment shall be made either by grinding the surface or by shimming the bearings.

Concrete Sealer shall be applied to the designated areas of the abutments.

The existing structural steel coating contains lead. The Contractor shall take appropriate precautions to deal with the presence of lead on this project.

2 The concrete for bridge decks finished according to Article 503.16(a) of the Standard Specifications shall be placed and compacted parallel to the skew in uniform increments along centerline of bridge. The machine used for finishing shall be set parallel to the skew for striking off and screeding the concrete.

The Protective Shield shall extend from centerline to centerline of the piers in the middle span of each structure and the width shall be the out to out parapet width of each structure plus 3 feet beyond each parapet.

The Organic Zinc Rich Primer / Epoxy / Urethane Paint System shall be used for painting of new structural steel except where otherwise noted. The entire system shall be shop applied, with the exception of the exterior surfaces and the bottom of the bottom flange of fascia beams, masked off connection surfaces, field installed fasteners and damaged areas shall be touched up and finish coated in the field. The color of the final finish coat for all interior steel surfaces shall be Gray, Munsell No. 5B 7/1. The color of the final finish coat for the exterior and the bottom of the bottom flange of fascia beams shall be Blue, Munsell No. 10B 3/6. See Special Provision for "Cleaning and Painting New Metal Structures."

Cleaning and painting of the existing structural steel shall be as specified in the Special Provision for "Cleaning and Painting Existing Steel Structures." All existing steel shall be cleaned per Near White Blast Cleaning- SSPC-SP10. All existing steel shall be painted according to the requirements of Paint System 1- OZ/E/U. The color of the final finish coat for all interior surfaces shall be Gray, Munsell No. 5B 7/1. The color for the final finish coat for the exterior and bottom flange of the fascia beams shall be Blue, Munsell No. 10B 3/6.

A minimum of three (3) air monitors will be required to monitor abrasive blasting operations at this site. See Special Provision for "Containment and Disposal of Lead Paint Cleaning Residues."

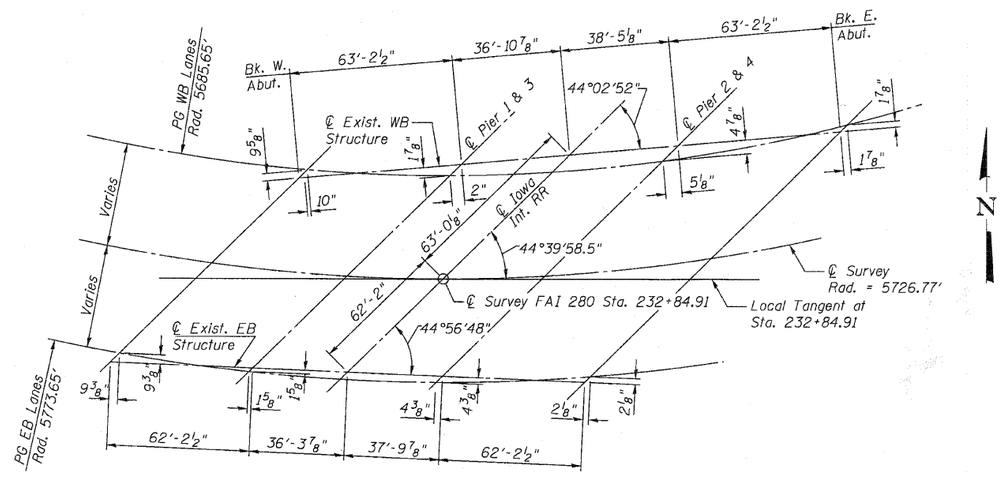

OFFSET SKETCH

2 REVISED 10/28/10

GENERAL DATA
STRUCTURE NO. 081-0018 (EB)
STRUCTURE NO. 081-0019 (WB)

Coombe-Bloxdorf P.C.
-CIVIL ENGINEERS-
-STRUCTURAL ENGINEERS-
-LAND SURVEYORS-
Design Firm License No. 184-002703

PROJECT NO.	09033
SCALE	
DATE	6/4/2010
DESIGN BY	BD/MCB
DRAWN BY	MML
CHECKED BY	MCB

SHEET NO. 2
55 SHEETS

F.A.I. RTE.	SECTION	COUNTY	TOTAL SHEETS	SHEET NO.
280	81-1 (VB) R	ROCK ISLAND	503	188
		CONTRACT NO. 64815		
FED. ROAD DIST. NO. 7	ILLINOIS	FED. AID PROJECT		

PLOT DATE = 7/21/2010
FILE NAME = ...081-0018-0019-64815-002-gen-data.dgn
PLOT SCALE = 4.4444 ' / IN.
USER NAME = CEC.

* Included in the cost of Pipe Underdrains for Structures.

** $6\frac{5}{8}$" minimum at existing cap.

*** Remove 5" x 5" area of top of existing footings to fit pipe drain. Cost included in Pipe Underdrains for Structures 4".

Note:
All drainage system components shall extend from face to face of each wingwall except an outlet pipe shall extend under the wingwall until intersecting with the side slopes. The pipes shall drain into concrete headwalls. (See Article 601.05 of the Standard Specifications and Highway Standard 601101).

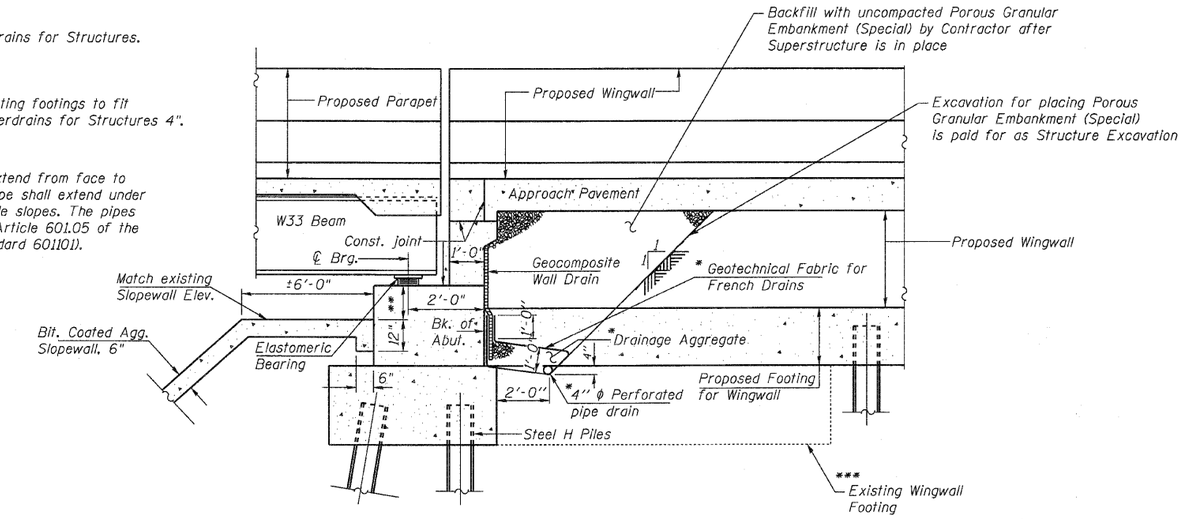

SECTION THRU ABUTMENT EXTENSION

(Horiz. dim. @ Rl. L's)
(Showing drainage details)

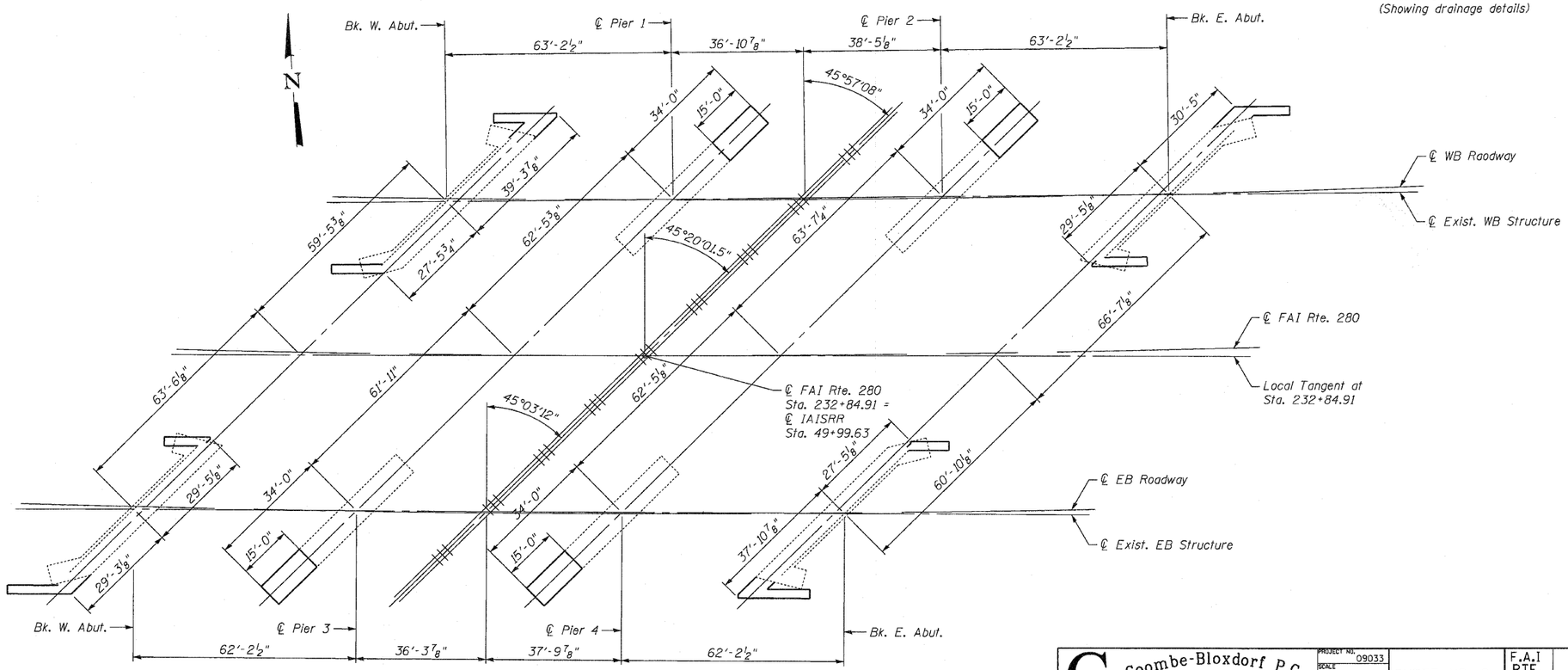

PLAN

FOOTING LAYOUT
STRUCTURE NO. 081-0018 (EB)
STRUCTURE NO. 081-0019 (WB)

Coombe-Bloxdorf P.C.
-CIVIL ENGINEERS-
-STRUCTURAL ENGINEERS-
-LAND SURVEYORS-
Design Firm License No. 184-002703

PROJECT NO.	09033
SCALE	
DATE	6/4/2010
DESIGN BY	MCB
DRAWN BY	CFC
CHECKED BY	MCB

SHEET NO. 3
55 SHEETS

F.A.I RTE.	SECTION	COUNTY	TOTAL SHEETS	SHEET NO.
280	81-1 (VB) R	ROCK ISLAND	503	189
		CONTRACT NO. 64815		
FED. ROAD DIST. NO.	ILLINOIS	FED. AID PROJECT		

PLOT DATE = 7/21/2010
FILE NAME = ...081-0018-0019-64815-003-footing-layout.dgn
PLOT SCALE = 1:1.879412 ¼" / IN.
USER NAME = CFC

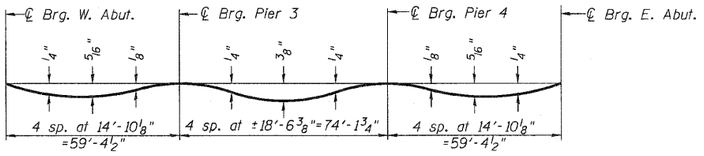

DEAD LOAD DEFLECTION DIAGRAM

(Includes weight of concrete only.)

Note:
The above deflections are not to be used in the field if the engineer is working from the grade elevations adjusted for dead load deflections as shown below.

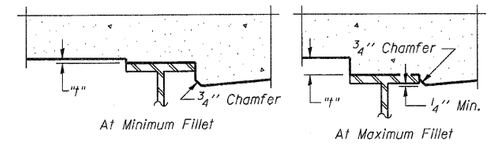

To determine "t": After all structural steel has been erected, elevations of the top flanges of the beams shall be taken at intervals shown below. These elevations subtracted from the "Theoretical Grade Elevations Adjusted for Dead Load Deflection" shown below, minus slab thickness, equals the fillet heights "t" above top flange of beams.

FILLET HEIGHTS

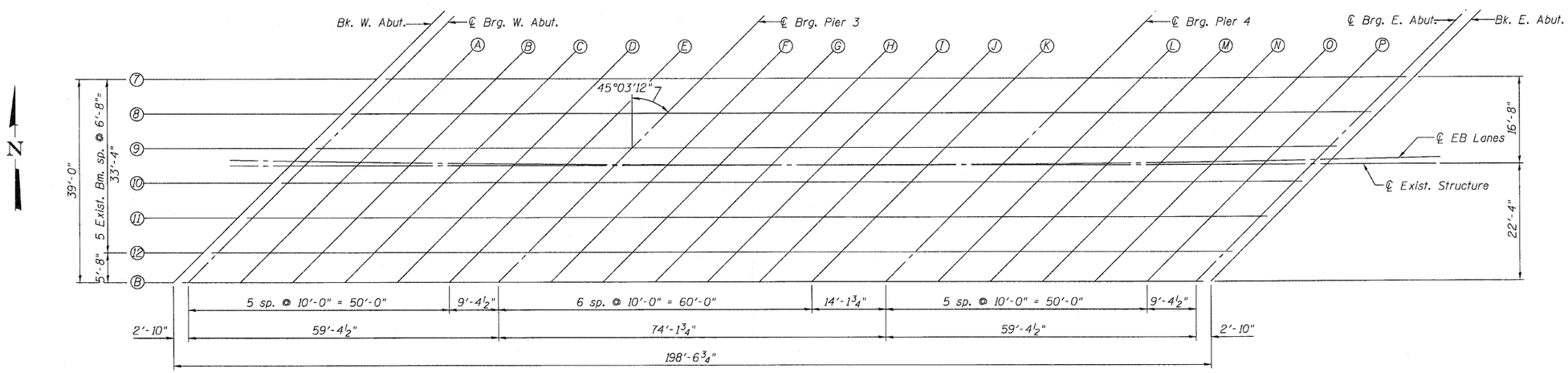

PLAN

TOP OF SLAB ELEVATIONS
EB STRUCTURE
STRUCTURE NO. 081-0018 (EB)

Coombe-Bloxdorf P.C. -CIVIL ENGINEERS- -STRUCTURAL ENGINEERS- -LAND SURVEYORS- Design Firm License No. 184-002703	PROJECT NO. 09033	SHEET NO. 4	F.A.I RTE.	SECTION	COUNTY	TOTAL SHEETS	SHEET NO.
	SCALE		280	81-1 (VB) R	ROCK ISLAND	503	190
	DATE 6/4/2010	55 SHEETS			CONTRACT NO. 64815		
	DESIGN BY BD/MCB						
	DRAWN BY TFG		FED. ROAD DIST. NO. 7	ILLINOIS	FED. AID PROJECT		
	CHECKED BY MCB						

PLOT DATE = 7/21/2010
FILE NAME = ...081-0018-0019-64815-004-top-slab-elevations-eb.dgn
PLOT SCALE = 10ft./62824 "x" / IN.
USER NAME = DFL.

BEAM 7

Location	Station	Offset	Theoretical Grade Elevations	Theoretical Grade Elevations Adjusted For Dead Load Deflection
Bk. W. Abut.	23159.54	-16.18	589.65	589.65
CL Brg. W. Abut.	23162.36	-16.23	589.66	589.66
A	23172.31	-16.39	589.67	589.68
B	23182.26	-16.54	589.68	589.70
C	23192.21	-16.66	589.69	589.71
D	23202.17	-16.77	589.70	589.71
E	23212.12	-16.86	589.70	589.71
CL Pier 3	23221.45	-16.93	589.70	589.70
F	23231.40	-16.99	589.70	589.72
G	23241.35	-17.03	589.70	589.72
H	23251.31	-17.06	589.70	589.73
I	23261.26	-17.06	589.70	589.73
J	23271.21	-17.05	589.69	589.71
K	23281.16	-17.03	589.68	589.69
CL Pier 4	23295.24	-16.96	589.66	589.66
L	23305.20	-16.89	589.65	589.66
M	23315.15	-16.80	589.63	589.65
N	23325.10	-16.69	589.61	589.64
O	23335.05	-16.57	589.59	589.62
P	23345.00	-16.43	589.57	589.59
CL Brg E. Abut.	23354.33	-16.28	589.55	589.55
Bk. E. Abut.	23357.15	-16.24	589.54	589.54

BEAM 8

Location	Station	Offset	Theoretical Grade Elevations	Theoretical Grade Elevations Adjusted For Dead Load Deflection
Bk. W. Abut.	23153.02	-9.39	589.83	589.83
CL Brg. W. Abut.	23155.83	-9.45	589.84	589.84
A	23165.77	-9.62	589.85	589.86
B	23175.71	-9.78	589.86	589.88
C	23185.65	-9.91	589.87	589.89
D	23195.59	-10.03	589.88	589.89
E	23205.53	-10.14	589.89	589.89
CL Pier 3	23214.85	-10.22	589.89	589.89
F	23224.79	-10.29	589.89	589.90
G	23234.73	-10.34	589.89	589.91
H	23244.67	-10.38	589.89	589.92
I	23254.61	-10.40	589.89	589.92
J	23264.56	-10.40	589.88	589.90
K	23274.50	-10.38	589.87	589.89
CL Pier 4	23288.56	-10.33	589.86	589.86
L	23298.50	-10.27	589.84	589.85
M	23308.44	-10.19	589.83	589.85
N	23318.38	-10.10	589.81	589.84
O	23328.32	-9.99	589.80	589.82
P	23338.26	-9.86	589.77	589.79
CL Brg E. Abut.	23347.58	-9.72	589.75	589.75
Bk. E. Abut.	23350.39	-9.68	589.75	589.75

BEAM 9

Location	Station	Offset	Theoretical Grade Elevations	Theoretical Grade Elevations Adjusted For Dead Load Deflection
Bk. W. Abut.	23146.51	-2.60	590.01	590.01
CL Brg. W. Abut.	23149.32	-2.66	590.01	590.01
A	23159.25	-2.84	590.03	590.04
B	23169.17	-3.01	590.04	590.06
C	23179.10	-3.16	590.05	590.08
D	23189.03	-3.29	590.06	590.08
E	23198.96	-3.40	590.07	590.08
CL Pier 3	23208.27	-3.50	590.07	590.07
F	23218.20	-3.58	590.08	590.09
G	23228.13	-3.64	590.08	590.10
H	23238.06	-3.69	590.08	590.11
I	23247.98	-3.72	590.08	590.11
J	23257.91	-3.73	590.07	590.09
K	23267.84	-3.73	590.06	590.08
CL Pier 4	23281.89	-3.69	590.05	590.05
L	23291.82	-3.64	590.04	590.05
M	23301.75	-3.58	590.03	590.04
N	23311.68	-3.50	590.01	590.04
O	23321.61	-3.40	589.99	590.02
P	23331.54	-3.28	589.98	589.99
CL Brg E. Abut.	23340.84	-3.16	589.96	589.96
Bk. E. Abut.	23343.66	-3.12	589.95	589.95

℄ EAST BOUND ROADWAY

Location	Station	Offset	Theoretical Grade Elevations	Theoretical Grade Elevations Adjusted For Dead Load Deflection
Bk. W. Abut.	23144.02	0.00	590.08	590.08
CL Brg. W. Abut.	23146.78	0.00	590.08	590.08
A	23156.52	0.00	590.10	590.12
B	23166.28	0.00	590.12	590.14
C	23176.05	0.00	590.14	590.16
D	23185.84	0.00	590.15	590.16
E	23195.64	0.00	590.16	590.17
CL Pier 3	23204.85	0.00	590.17	590.17
F	23214.69	0.00	590.18	590.19
G	23224.54	0.00	590.18	590.20
H	23234.41	0.00	590.18	590.21
I	23244.30	0.00	590.18	590.21
J	23254.21	0.00	590.18	590.20
K	23264.13	0.00	590.17	590.19
CL Pier 4	23278.19	0.00	590.16	590.16
L	23288.16	0.00	590.15	590.15
M	23298.14	0.00	590.13	590.15
N	23308.14	0.00	590.12	590.14
O	23318.16	0.00	590.10	590.12
P	23328.19	0.00	590.08	590.09
CL Brg E. Abut.	23337.61	0.00	590.05	590.05
Bk. E. Abut.	23340.47	0.00	590.05	590.05

BEAM 10

Location	Station	Offset	Theoretical Grade Elevations	Theoretical Grade Elevations Adjusted For Dead Load Deflection
Bk. W. Abut.	23140.01	4.20	590.18	590.18
CL Brg. W. Abut.	23142.82	4.14	590.19	590.19
A	23152.74	3.95	590.20	590.22
B	23162.65	3.77	590.22	590.24
C	23172.57	3.61	590.23	590.25
D	23182.48	3.46	590.24	590.26
E	23192.40	3.34	590.25	590.26
CL Pier 3	23201.70	3.23	590.26	590.26
F	23211.62	3.14	590.26	590.27
G	23221.53	3.07	590.26	590.29
H	23231.45	3.01	590.26	590.29
I	23241.37	2.97	590.26	590.30
J	23251.29	2.94	590.26	590.28
K	23261.21	2.94	590.26	590.27
CL Pier 4	23275.24	2.96	590.24	590.24
L	23285.16	2.99	590.23	590.24
M	23295.07	3.04	590.22	590.24
N	23304.99	3.11	590.21	590.23
O	23314.91	3.20	590.19	590.21
P	23324.83	3.31	590.18	590.19
CL Brg E. Abut.	23334.12	3.42	590.16	590.16
Bk. E. Abut.	23336.93	3.46	590.15	590.15

BEAM 11

Location	Station	Offset	Theoretical Grade Elevations	Theoretical Grade Elevations Adjusted For Dead Load Deflection
Bk. W. Abut.	23133.53	11.01	590.36	590.36
CL Brg. W. Abut.	23136.34	10.95	590.36	590.36
A	23146.24	10.74	590.38	590.39
B	23156.15	10.55	590.40	590.42
C	23166.05	10.38	590.41	590.43
D	23175.96	10.22	590.42	590.44
E	23185.86	10.09	590.43	590.44
CL Pier 3	23195.15	9.97	590.44	590.44
F	23205.05	9.87	590.45	590.46
G	23214.96	9.78	590.45	590.47
H	23224.87	9.71	590.45	590.48
I	23234.77	9.66	590.45	590.48
J	23244.68	9.62	590.45	590.47
K	23254.59	9.60	590.45	590.46
CL Pier 4	23268.60	9.61	590.44	590.44
L	23278.51	9.63	590.43	590.44
M	23288.41	9.67	590.42	590.43
N	23298.32	9.73	590.41	590.43
O	23308.23	9.81	590.39	590.41
P	23318.13	9.90	590.37	590.39
CL Brg E. Abut.	23327.42	10.00	590.36	590.36
Bk. E. Abut.	23330.22	10.04	590.35	590.35

TOP OF SLAB ELEVATIONS
STRUCTURE NO. 081-0018 (EB)

Coombe-Bloxdorf P.C.
-CIVIL ENGINEERS-
-STRUCTURAL ENGINEERS-
-LAND SURVEYORS-
Design Firm License No. 184-002703

PROJECT NO.	09033
SCALE	
DATE	6/4/2010
DESIGN BY	MCB
DRAWN BY	CFC
CHECKED BY	MCB

SHEET NO. 5
55 SHEETS

F.A.I RTE.	SECTION	COUNTY	TOTAL SHEETS	SHEET NO.
280	81-1 (VB) R	ROCK ISLAND	503	191
		CONTRACT NO. 64815		
FED. ROAD DIST. NO.	ILLINOIS	FED. AID PROJECT		

E-S1 11-1-09

PLOT DATE = 7/21/2010
FILE NAME = u:\081-0018-0019-64815-005-tos-elev-eb-1.dgn
PLOT SCALE = 1.0000 ' / IN.
USER NAME = CFC.

BEAM 12

Location	Station	Offset	Theoretical Grade Elevations	Theoretical Grade Elevations Adjusted For Dead Load Deflection
Bk. W. Abut.	23127.07	17.83	590.53	590.53
CL Brg. W. Abut.	23129.87	17.76	590.54	590.54
A	23139.76	17.54	590.56	590.57
B	23149.66	17.34	590.57	590.59
C	23159.55	17.16	590.59	590.61
D	23169.44	16.99	590.60	590.62
E	23179.33	16.84	590.61	590.62
CL Pier 3	23188.61	16.72	590.62	590.62
F	23198.50	16.60	590.63	590.64
G	23208.40	16.50	590.63	590.65
H	23218.29	16.42	590.64	590.67
I	23228.19	16.36	590.64	590.67
J	23238.08	16.31	590.64	590.66
K	23247.98	16.28	590.64	590.65
CL Pier 4	23261.98	16.27	590.63	590.63
L	23271.87	16.28	590.62	590.63
M	23281.77	16.31	590.61	590.63
N	23291.66	16.36	590.60	590.62
O	23301.56	16.42	590.59	590.61
P	23311.45	16.50	590.57	590.58
CL Brg E. Abut.	23320.73	16.59	590.56	590.56
Bk. E. Abut.	23323.53	16.63	590.55	590.55

BEAM B

Location	Station	Offset	Theoretical Grade Elevations	Theoretical Grade Elevations Adjusted For Dead Load Deflection
Bk. W. Abut.	23121.59	23.63	590.68	590.68
CL Brg. W. Abut.	23124.39	23.56	590.68	590.68
A	23134.27	23.33	590.70	590.72
B	23144.15	23.12	590.72	590.74
C	23154.03	22.93	590.74	590.76
D	23163.92	22.75	590.75	590.77
E	23173.80	22.59	590.77	590.77
CL Pier 3	23183.06	22.46	590.77	590.77
F	23192.95	22.33	590.78	590.79
G	23202.83	22.22	590.79	590.81
H	23212.72	22.13	590.79	590.82
I	23222.60	22.06	590.80	590.83
J	23232.49	22.00	590.80	590.82
K	23242.38	21.96	590.80	590.81
CL Pier 4	23256.36	21.94	590.79	590.79
L	23266.24	21.94	590.78	590.79
M	23276.13	21.96	590.78	590.79
N	23286.02	22.00	590.77	590.79
O	23295.90	22.05	590.75	590.77
P	23305.79	22.12	590.74	590.75
CL Brg E. Abut.	23315.05	22.20	590.72	590.72
Bk. E. Abut.	23317.85	22.23	590.72	590.72

TOP OF SLAB ELEVATIONS
STRUCTURE NO. 081-0018 (EB)

Coombe-Bloxdorf P.C.
-CIVIL ENGINEERS-
-STRUCTURAL ENGINEERS-
-LAND SURVEYORS-
Design Firm License No. 184-002703

PROJECT NO.	09033
SCALE	
DATE	6/4/2010
DESIGN BY	MCB
DRAWN BY	CFC
CHECKED BY	MCB

SHEET NO. 6
55 SHEETS

F.A.I RTE.	SECTION	COUNTY	TOTAL SHEETS	SHEET NO.
280	81-1 (VB) R	ROCK ISLAND	503	192
		CONTRACT NO. 64815		
FED. ROAD DIST. NO.	ILLINOIS	FED. AID PROJECT		

E-S1

11-1-09

PLOT DATE = 7/21/2010
FILE NAME = ...081-0018-0019-64815-006-tos-elev-eb-2.dgn
PLOT SCALE = 0ft.029397 "=" / IN.
USER NAME = CFC.

NORTH EDGE OF SHOULDER

Location	Station	Offset	Theoretical Grade Elevations
W. End W. Approach	23132.01	-18.00	589.54
A	23141.75	-18.00	589.57
B	23151.52	-18.00	589.59
E. End E. Approach	23161.30	-18.00	589.61

NORTH EDGE OF PAVEMENT

Location	Station	Offset	Theoretical Grade Elevations
W. End W. Approach	23126.29	-12.00	589.69
A	23136.02	-12.00	589.72
B	23145.76	-12.00	589.74
E. End E. Approach	23155.52	-12.00	589.76

CENTERLINE EB LANES

Location	Station	Offset	Theoretical Grade Elevations
W. End W. Approach	23114.91	0.00	590.00
A	23124.60	0.00	590.03
B	23134.30	0.00	590.05
E. End E. Approach	23144.02	0.00	590.08

SOUTH EDGE OF PAVEMENT

Location	Station	Offset	Theoretical Grade Elevations
W. End W. Approach	23103.60	12.00	590.30
A	23113.25	12.00	590.33
B	23122.91	12.00	590.36
E. End E. Approach	23132.59	12.00	590.38

SOUTH EDGE OF SHOULDER

Location	Station	Offset	Theoretical Grade Elevations
W. End W. Approach	23094.22	22.00	590.55
A	23103.84	22.00	590.58
B	23113.47	22.00	590.61
E. End E. Approach	23123.12	22.00	590.64

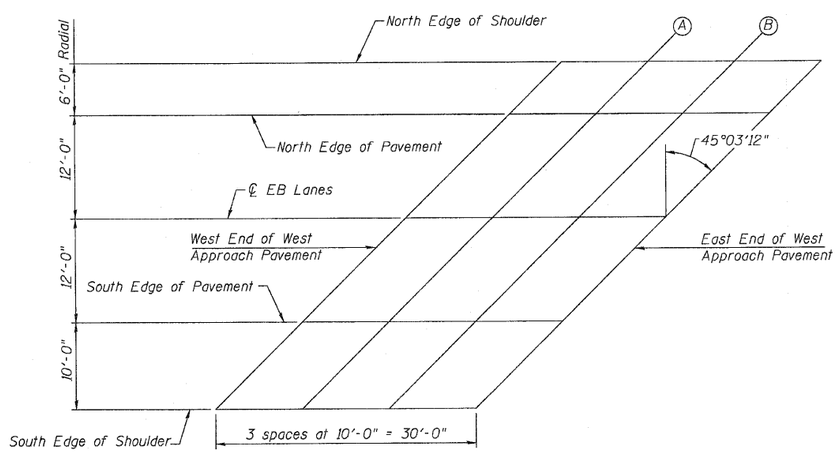

PLAN
WEST APPROACH (EB)

TOP OF WEST APPROACH SLAB ELEVATIONS
EB STRUCTURE
STRUCTURE NO. 081-0018 (EB)

Coombe-Bloxdorf P.C.
-CIVIL ENGINEERS-
-STRUCTURAL ENGINEERS-
-LAND SURVEYORS-
Design Firm License No. 184-002703

PROJECT NO.	09033
SCALE	
DATE	6/4/2010
DESIGN BY	BD/MCB
DRAWN BY	TFG
CHECKED BY	MCB

SHEET NO. 7
55 SHEETS

F.A.I RTE.	SECTION	COUNTY	TOTAL SHEETS	SHEET NO.
280	81-1 (VB) R	ROCK ISLAND	503	193
		CONTRACT NO. 64815		
FED. ROAD DIST. NO. 7	ILLINOIS	FED. AID PROJECT		

E-AS

11-1-09

PLOT DATE = 7/21/2010
FILE NAME = ...081-0018-0019-64815-007-top-west-appr-slab-elev-eb.dgn
PLOT SCALE = 862.82118 ' / IN.
USER NAME = CFC.

NORTH EDGE OF SHOULDER

Location	Station	Offset	Theoretical Grade Elevations
W. End E. Approach	23358.97	-18.00	589.49
A	23369.11	-18.00	589.46
B	23379.27	-18.00	589.42
E. End E. Approach	23389.45	-18.00	589.38

NORTH EDGE OF PAVEMENT

Location	Station	Offset	Theoretical Grade Elevations
W. End E. Approach	23352.78	-12.00	589.68
A	23362.90	-12.00	589.64
B	23373.04	-12.00	589.61
E. End E. Approach	23383.19	-12.00	589.57

CENTERLINE EB LANES

Location	Station	Offset	Theoretical Grade Elevations
W. End E. Approach	23340.47	0.00	590.05
A	23350.54	0.00	590.02
B	23360.63	0.00	589.99
E. End E. Approach	23370.75	0.00	589.95

SOUTH EDGE OF PAVEMENT

Location	Station	Offset	Theoretical Grade Elevations
W. End E. Approach	23328.23	12.00	590.41
A	23338.26	12.00	590.39
B	23348.31	12.00	590.36
E. End E. Approach	23358.38	12.00	590.33

SOUTH EDGE OF SHOULDER

Location	Station	Offset	Theoretical Grade Elevations
W. End E. Approach	23318.09	22.00	590.71
A	23328.09	22.00	590.69
B	23338.10	22.00	590.67
E. End E. Approach	23348.13	22.00	590.64

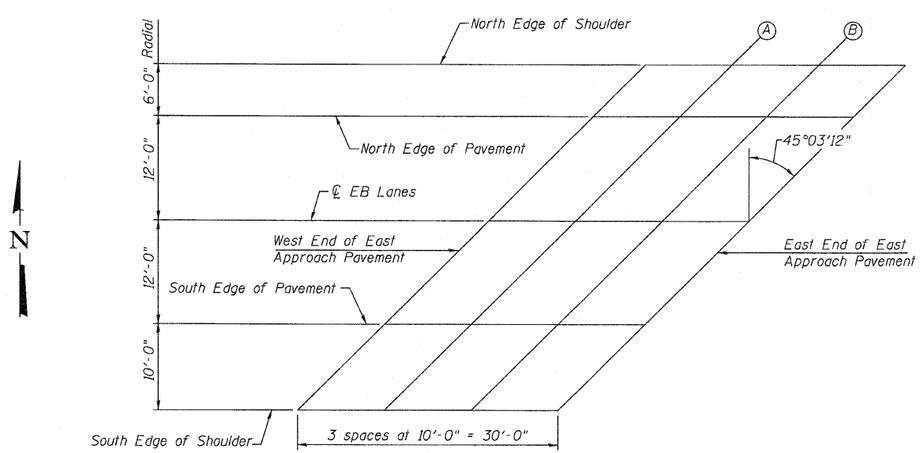

PLAN
EAST APPROACH (EB)

TOP OF EAST APPROACH SLAB ELEVATIONS
EB STRUCTURE
STRUCTURE NO. 081-0018 (EB)

Coombe-Bloxdorf P.C.
-CIVIL ENGINEERS-
-STRUCTURAL ENGINEERS-
-LAND SURVEYORS-
Design Firm License No. 184-002703

PROJECT NO.	09033
SCALE	
DATE	6/4/2010
DESIGN BY	BD/MCB
DRAWN BY	TFG
CHECKED BY	MCB

SHEET NO. 8
55 SHEETS

F.A.I. RTE.	SECTION	COUNTY	TOTAL SHEETS	SHEET NO.
280	81-1 (VB) R	ROCK ISLAND	503	194
		CONTRACT NO. 64815		
FED. ROAD DIST. NO. 7	ILLINOIS	FED. AID PROJECT		

E-AS

11-1-09

PLOT DATE = 7/21/2010
FILE NAME = ...081-0018-0019-64815-008-top-east-appr-slab-elev-eb.dgn
PLOT SCALE = 40.0000 ' / IN.
USER NAME = CFC.

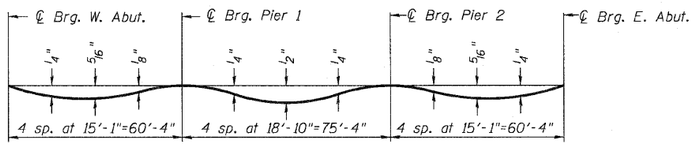

DEAD LOAD DEFLECTION DIAGRAM

(Includes weight of concrete only.)

Note:
The above deflections are not to be used in the field if the engineer is working from the grade elevations adjusted for dead load deflections as shown below.

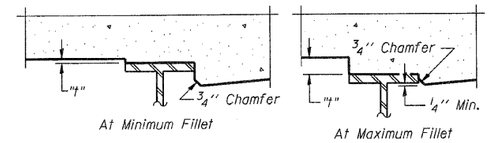

To determine "t": After all structural steel has been erected, elevations of the top flanges of the beams shall be taken at intervals shown below. These elevations subtracted from the "Theoretical Grade Elevations Adjusted for Dead Load Deflection" shown below, minus slab thickness, equals the fillet heights "t" above top flange of beams.

FILLET HEIGHTS

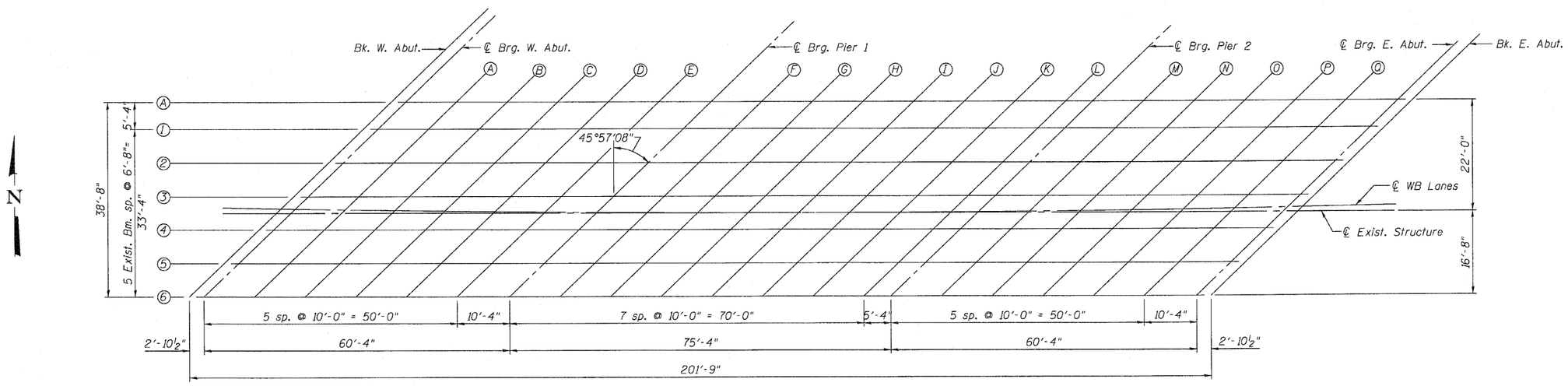

PLAN

TOP OF SLAB ELEVATIONS
WB STRUCTURE
STRUCTURE NO. 081-0019 (WB)

Coombe-Bloxdorf P.C. -CIVIL ENGINEERS- -STRUCTURAL ENGINEERS- -LAND SURVEYORS- Design Firm License No. 184-002703	PROJECT NO. 09033; SCALE; DATE 6/4/2010; DESIGN BY BD/MCB; DRAWN BY TFG; CHECKED BY MCB	SHEET NO. 9 / 55 SHEETS	F.A.I RTE. 280	SECTION 81-1 (VB) R	COUNTY ROCK ISLAND	TOTAL SHEETS 503 / SHEET NO. 195
					CONTRACT NO. 64815	
			FED. ROAD DIST. NO. 7	ILLINOIS	FED. AID PROJECT	

PLOT DATE = 7/21/2010
FILE NAME = ...B081-0018-0019-64815-009-top-slab-elevations-wb.dgn
PLOT SCALE = 10(IL:762824 "s" / IN.
USER NAME = CFC.

BEAM A

Location	Station	Offset	Theoretical Grade Elevations	Theoretical Grade Elevations Adjusted For Dead Load Deflection
Bk. W. Abut.	23251.74	-21.61	589.57	589.57
CL Brg. W. Abut.	23254.65	-21.66	589.57	589.57
A	23264.76	-21.81	589.56	589.58
B	23274.87	-21.95	589.55	589.57
C	23284.99	-22.08	589.53	589.56
D	23295.11	-22.18	589.52	589.53
E	23305.22	-22.27	589.50	589.51
CL Pier 1	23315.68	-22.34	589.48	589.48
F	23325.79	-22.39	589.45	589.47
G	23335.91	-22.42	589.43	589.45
H	23346.03	-22.44	589.40	589.44
I	23356.14	-22.44	589.37	589.41
J	23366.26	-22.42	589.34	589.37
K	23376.38	-22.38	589.31	589.33
L	23386.49	-22.32	589.27	589.28
CL Pier 2	23391.89	-22.29	589.25	589.25
M	23402.00	-22.21	589.22	589.22
N	23412.12	-22.11	589.18	589.19
O	23422.24	-21.99	589.13	589.16
P	23432.35	-21.85	589.09	589.11
Q	23442.46	-21.70	589.04	589.06
CL Brg. E. Abut.	23452.92	-21.52	588.99	588.99
Bk. E. Abut.	23455.82	-21.47	588.98	588.98

BEAM 1

Location	Station	Offset	Theoretical Grade Elevations	Theoretical Grade Elevations Adjusted For Dead Load Deflection
Bk. W. Abut.	23246.26	-16.18	589.73	589.73
CL Brg. W. Abut.	23249.16	-16.23	589.72	589.72
A	23259.27	-16.40	589.72	589.73
B	23269.37	-16.55	589.70	589.73
C	23279.48	-16.68	589.69	589.72
D	23289.58	-16.79	589.68	589.69
E	23299.69	-16.89	589.66	589.67
CL Pier 1	23310.13	-16.97	589.64	589.64
F	23320.24	-17.03	589.62	589.63
G	23330.35	-17.07	589.59	589.62
H	23340.45	-17.10	589.57	589.60
I	23350.56	-17.11	589.54	589.58
J	23360.67	-17.10	589.51	589.54
K	23370.78	-17.07	589.48	589.50
L	23380.88	-17.02	589.44	589.45
CL Pier 2	23386.27	-16.99	589.42	589.42
M	23396.38	-16.92	589.39	589.40
N	23406.49	-16.83	589.35	589.37
O	23416.59	-16.72	589.31	589.33
P	23426.70	-16.60	589.26	589.29
Q	23436.80	-16.45	589.22	589.23
CL Brg. E. Abut.	23447.24	-16.29	589.17	589.17
Bk. E. Abut.	23450.15	-16.24	589.15	589.15

BEAM 2

Location	Station	Offset	Theoretical Grade Elevations	Theoretical Grade Elevations Adjusted For Dead Load Deflection
Bk. W. Abut.	23239.42	-9.38	589.92	589.92
CL Brg. W. Abut.	23242.32	-9.44	589.92	589.92
A	23252.41	-9.62	589.91	589.92
B	23262.50	-9.78	589.90	589.92
C	23272.60	-9.92	589.89	589.91
D	23282.69	-10.05	589.87	589.89
E	23292.79	-10.16	589.86	589.87
CL Pier 1	23303.22	-10.25	589.84	589.84
F	23313.31	-10.32	589.82	589.83
G	23323.41	-10.38	589.80	589.82
H	23333.50	-10.42	589.77	589.80
I	23343.60	-10.44	589.74	589.78
J	23353.69	-10.44	589.72	589.75
K	23363.79	-10.42	589.69	589.71
L	23373.89	-10.39	589.65	589.66
CL Pier 2	23379.27	-10.36	589.63	589.63
M	23389.36	-10.30	589.60	589.61
N	23399.46	-10.23	589.56	589.58
O	23409.55	-10.13	589.52	589.55
P	23419.65	-10.02	589.48	589.51
Q	23429.74	-9.89	589.44	589.45
CL Brg. E. Abut.	23440.17	-9.73	589.39	589.39
Bk. E. Abut.	23443.07	-9.69	589.38	589.38

BEAM 3

Location	Station	Offset	Theoretical Grade Elevations	Theoretical Grade Elevations Adjusted For Dead Load Deflection
Bk. W. Abut.	23232.60	-2.58	590.11	590.11
CL Brg. W. Abut.	23235.49	-2.64	590.11	590.11
A	23245.58	-2.83	590.10	590.12
B	23255.66	-3.00	590.09	590.12
C	23265.74	-3.16	590.08	590.11
D	23275.82	-3.30	590.07	590.09
E	23285.90	-3.42	590.05	590.06
CL Pier 1	23296.32	-3.52	590.04	590.04
F	23306.40	-3.61	590.02	590.03
G	23316.49	-3.68	590.00	590.02
H	23326.57	-3.73	589.97	590.01
I	23336.65	-3.76	589.95	589.99
J	23346.74	-3.77	589.92	589.95
K	23356.82	-3.77	589.89	589.91
L	23366.90	-3.75	589.86	589.87
CL Pier 2	23372.28	-3.73	589.85	589.85
M	23382.36	-3.68	589.81	589.82
N	23392.45	-3.62	589.77	589.79
O	23402.53	-3.53	589.74	589.76
P	23412.61	-3.43	589.70	589.72
Q	23422.70	-3.31	589.65	589.67
CL Brg. E. Abut.	23433.11	-3.17	589.61	589.61
Bk. E. Abut.	23436.01	-3.13	589.59	589.59

℄ WEST BOUND ROADWAY

Location	Station	Offset	Theoretical Grade Elevations	Theoretical Grade Elevations Adjusted For Dead Load Deflection
Bk. W. Abut.	23230.01	0.00	590.18	590.18
CL Brg. W. Abut.	23232.85	0.00	590.18	590.18
A	23242.73	0.00	590.18	590.20
B	23252.63	0.00	590.18	590.20
C	23262.54	0.00	590.17	590.20
D	23272.47	0.00	590.16	590.18
E	23282.42	0.00	590.15	590.16
CL Pier 1	23292.72	0.00	590.14	590.14
F	23302.70	0.00	590.13	590.14
G	23312.70	0.00	590.11	590.13
H	23322.72	0.00	590.09	590.12
I	23332.76	0.00	590.06	590.10
J	23342.81	0.00	590.04	590.07
K	23352.88	0.00	590.01	590.03
L	23362.98	0.00	589.98	589.99
CL Pier 2	23368.37	0.00	589.96	589.96
M	23378.49	0.00	589.93	589.94
N	23388.62	0.00	589.89	589.91
O	23398.78	0.00	589.85	589.88
P	23408.96	0.00	589.81	589.83
Q	23419.15	0.00	589.76	589.78
CL Brg. E. Abut.	23429.71	0.00	589.71	589.71
Bk. E. Abut.	23432.65	0.00	589.70	589.70

BEAM 4

Location	Station	Offset	Theoretical Grade Elevations	Theoretical Grade Elevations Adjusted For Dead Load Deflection
Bk. W. Abut.	23225.79	4.23	590.30	590.30
CL Brg. W. Abut.	23228.69	4.17	590.30	590.30
A	23238.75	3.96	590.29	590.31
B	23248.82	3.78	590.28	590.31
C	23258.89	3.61	590.28	590.30
D	23268.96	3.46	590.26	590.28
E	23279.03	3.33	590.25	590.26
CL Pier 1	23289.44	3.21	590.24	590.24
F	23299.51	3.11	590.22	590.23
G	23309.58	3.03	590.20	590.22
H	23319.65	2.97	590.18	590.21
I	23329.72	2.93	590.15	590.19
J	23339.80	2.90	590.13	590.16
K	23349.87	2.89	590.10	590.12
L	23359.94	2.90	590.07	590.08
CL Pier 2	23365.31	2.91	590.05	590.05
M	23375.38	2.95	590.02	590.03
N	23385.45	3.00	589.99	590.00
O	23395.52	3.07	589.95	589.98
P	23405.60	3.16	589.91	589.94
Q	23415.67	3.27	589.87	589.89
CL Brg. E. Abut.	23426.07	3.40	589.83	589.83
Bk. E. Abut.	23428.97	3.44	589.81	589.81

TOP OF SLAB ELEVATIONS
STRUCTURE NO. 081-0019 (WB)

Coombe-Bloxdorf P.C.
-CIVIL ENGINEERS-
-STRUCTURAL ENGINEERS-
-LAND SURVEYORS-
Design Firm License No. 184-002703

PROJECT NO.	09033
SCALE	
DATE	6/4/2010
DESIGN BY	MCB
DRAWN BY	CFC
CHECKED BY	MCB

SHEET NO. 10
55 SHEETS

F.A.I RTE.	SECTION	COUNTY	TOTAL SHEETS	SHEET NO.
280	81-1 (VB) R	ROCK ISLAND	503	196
		CONTRACT NO. 64815		
FED. ROAD DIST. NO.	ILLINOIS	FED. AID PROJECT		

E-S1

11-1-09

PLOT DATE = 7/21/2010
FILE NAME = ...\081-0018-0019-64815-010-tos-elev-wb-1.dgn
PLOT SCALE = 0.0625397 ' / IN.
USER NAME = CFC.

BEAM 5

Location	Station	Offset	Theoretical Grade Elevations	Theoretical Grade Elevations Adjusted For Dead Load Deflection
Bk. W. Abut.	23219.00	11.05	590.49	590.49
CL Brg. W. Abut.	23221.89	10.98	590.49	590.49
A	23231.95	10.77	590.48	590.50
B	23242.01	10.57	590.48	590.50
C	23252.06	10.39	590.47	590.50
D	23262.12	10.23	590.46	590.48
E	23272.18	10.08	590.45	590.46
CL Pier 1	23282.57	9.95	590.43	590.43
F	23292.63	9.84	590.42	590.43
G	23302.69	9.75	590.40	590.42
H	23312.75	9.68	590.38	590.41
I	23322.81	9.62	590.36	590.40
J	23332.87	9.59	590.33	590.36
K	23342.93	9.56	590.31	590.33
L	23352.99	9.56	590.28	590.28
CL Pier 2	23358.36	9.57	590.26	590.26
M	23368.42	9.59	590.23	590.24
N	23378.47	9.63	590.20	590.22
O	23388.53	9.69	590.16	590.19
P	23398.59	9.77	590.12	590.15
Q	23408.65	9.86	590.09	590.10
CL Brg. E. Abut.	23419.05	9.98	590.04	590.04
Bk. E. Abut.	23421.94	10.01	590.03	590.03

BEAM 6

Location	Station	Offset	Theoretical Grade Elevations	Theoretical Grade Elevations Adjusted For Dead Load Deflection
Bk. W. Abut.	23212.23	17.87	590.67	590.67
CL Brg. W. Abut.	23215.12	17.80	590.67	590.67
A	23225.16	17.58	590.67	590.69
B	23235.21	17.37	590.67	590.69
C	23245.25	17.18	590.66	590.69
D	23255.30	17.00	590.65	590.67
E	23265.34	16.85	590.64	590.65
CL Pier 1	23275.72	16.70	590.63	590.63
F	23285.77	16.58	590.61	590.63
G	23295.82	16.48	590.60	590.62
H	23305.87	16.40	590.58	590.61
I	23315.91	16.33	590.56	590.60
J	23325.96	16.28	590.54	590.57
K	23336.01	16.24	590.51	590.53
L	23346.06	16.23	590.48	590.49
CL Pier 2	23351.42	16.23	590.47	590.47
M	23361.46	16.24	590.44	590.45
N	23371.51	16.27	590.41	590.43
O	23381.56	16.31	590.37	590.40
P	23391.61	16.38	590.34	590.36
Q	23401.66	16.46	590.30	590.32
CL Brg. E. Abut.	23412.04	16.56	590.26	590.26
Bk. E. Abut.	23414.93	16.59	590.25	590.25

TOP OF SLAB ELEVATIONS
STRUCTURE NO. 081-0019 (WB)

Coombe-Bloxdorf P.C.
-CIVIL ENGINEERS-
-STRUCTURAL ENGINEERS-
-LAND SURVEYORS-
Design Firm License No. 184-002703

PROJECT NO.	09033
SCALE	
DATE	6/4/2010
DESIGN BY	MCB
DRAWN BY	CFC
CHECKED BY	MCB

SHEET NO. 11
55 SHEETS

F.A.I RTE.	SECTION	COUNTY	TOTAL SHEETS	SHEET NO.
280	81-1 (VB) R	ROCK ISLAND	503	197
		CONTRACT NO. 64815		
FED. ROAD DIST. NO.	ILLINOIS	FED. AID PROJECT		

E-S1

11-1-09

PLOT DATE = 7/21/2010
FILE NAME = ...081-0018-0019-64815-011-tos-elev-wb-2.dgn
PLOT SCALE = 0ft.029397 "=" / IN.
USER NAME = CFC.

NORTH EDGE OF SHOULDER

Location	Station	Offset	Theoretical Grade Elevations
W.End W. Approach	23222.38	-22.00	589.56
A	23232.28	-22.00	589.56
B	23242.20	-22.00	589.56
E. End W. Approach	23252.13	-22.00	589.56

NORTH EDGE OF PAVEMENT

Location	Station	Offset	Theoretical Grade Elevations
W.End W. Approach	23212.40	-12.00	589.84
A	23222.27	-12.00	589.84
B	23232.15	-12.00	589.84
E. End W. Approach	23242.05	-12.00	589.84

CENTERLINE WB LANES

Location	Station	Offset	Theoretical Grade Elevations
W.End W. Approach	23200.49	0.00	590.17
A	23210.32	0.00	590.17
B	23220.16	0.00	590.18
E. End W. Approach	23230.01	0.00	590.18

SOUTH EDGE OF PAVEMENT

Location	Station	Offset	Theoretical Grade Elevations
W.End W. Approach	23188.66	12.00	590.49
A	23198.44	12.00	590.50
B	23208.24	12.00	590.51
E. End W. Approach	23218.06	12.00	590.51

SOUTH EDGE OF SHOULDER

Location	Station	Offset	Theoretical Grade Elevations
W.End W. Approach	23182.77	18.00	590.65
A	23192.53	18.00	590.66
B	23202.31	18.00	590.67
E. End W. Approach	23212.11	18.00	590.68

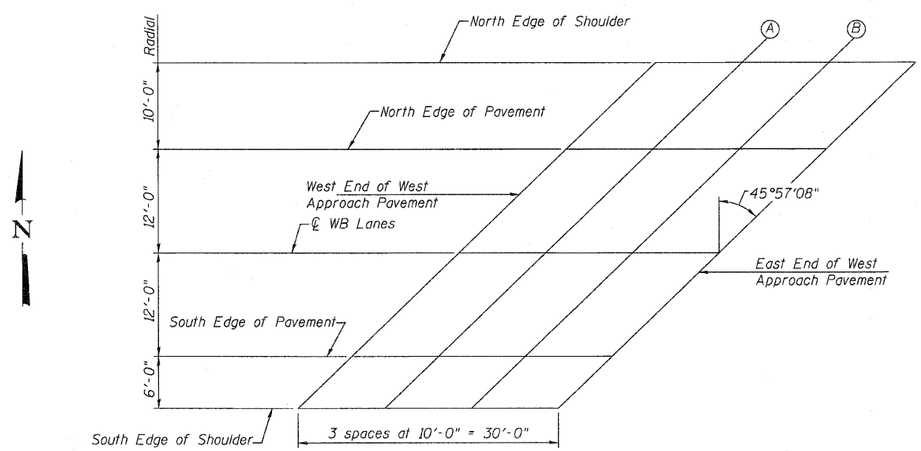

PLAN
WEST APPROACH (WB)

TOP OF WEST APPROACH SLAB ELEVATIONS
WB STRUCTURE
STRUCTURE NO. 081-0019 (WB)

Coombe-Bloxdorf P.C.
-CIVIL ENGINEERS-
-STRUCTURAL ENGINEERS-
-LAND SURVEYORS-
Design Firm License No. 184-002703

PROJECT NO.	09033
SCALE	
DATE	6/4/2010
DESIGN BY	BD/MCB
DRAWN BY	TFG
CHECKED BY	MCB

SHEET NO. 12
55 SHEETS

F.A.I RTE.	SECTION	COUNTY	TOTAL SHEETS	SHEET NO.
280	81-1 (VB) R	ROCK ISLAND	503	198
		CONTRACT NO. 64815		
FED. ROAD DIST. NO. 7	ILLINOIS	FED. AID PROJECT		

E-AS

11-1-09

PLOT DATE = 7/21/2010
FILE NAME = BDBI-0018-0019-64815-012-top-west-appr-slab-elev-wb.dgn
PLOT SCALE = 862.822118 ' / IN.
USER NAME = DFC.

NORTH EDGE OF SHOULDER

Location	Station	Offset	Theoretical Grade Elevations
W. End E. Approach	23456.40	-22.00	588.96
A	23466.72	-22.00	588.90
B	23477.07	-22.00	588.84
E. End E. Approach	23487.44	-22.00	588.78

NORTH EDGE OF PAVEMENT

Location	Station	Offset	Theoretical Grade Elevations
W. End E. Approach	23445.57	-12.00	589.30
A	23455.85	-12.00	589.24
B	23466.16	-12.00	589.18
E. End E. Approach	23476.49	-12.00	589.12

CENTERLINE WB LANES

Location	Station	Offset	Theoretical Grade Elevations
W. End E. Approach	23432.65	0.00	589.70
A	23442.89	0.00	589.65
B	23453.15	0.00	589.59
E. End E. Approach	23463.43	0.00	589.54

SOUTH EDGE OF PAVEMENT

Location	Station	Offset	Theoretical Grade Elevations
W. End E. Approach	23419.82	12.00	590.10
A	23430.01	12.00	590.05
B	23440.23	12.00	590.00
E. End E. Approach	23450.46	12.00	589.94

SOUTH EDGE OF SHOULDER

Location	Station	Offset	Theoretical Grade Elevations
W. End E. Approach	23413.43	18.00	590.29
A	23423.60	18.00	590.25
B	23433.80	18.00	590.20
E. End E. Approach	23444.01	18.00	590.15

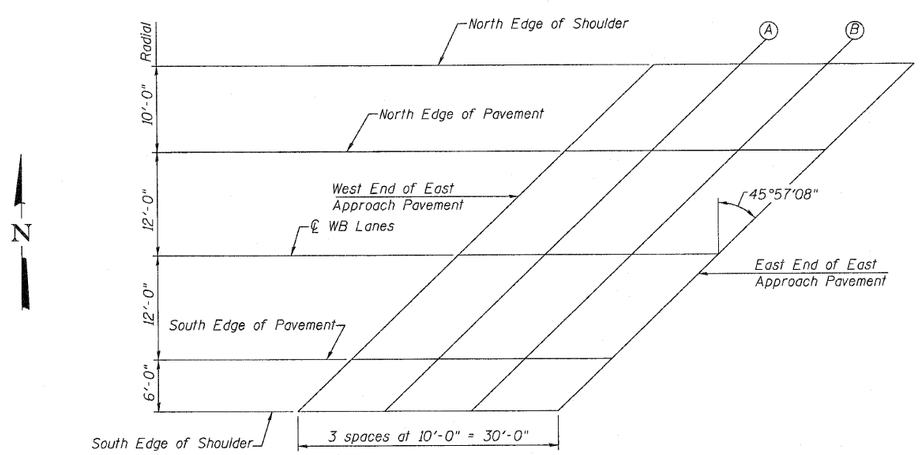

PLAN
EAST APPROACH (WB)

TOP OF EAST APPROACH SLAB ELEVATIONS
WB STRUCTURE
STRUCTURE NO. 081-0019 (WB)

Coombe-Bloxdorf P.C.
-CIVIL ENGINEERS-
-STRUCTURAL ENGINEERS-
-LAND SURVEYORS-
Design Firm License No. 184-002703

PROJECT NO.	09033
SCALE	
DATE	6/4/2010
DESIGN BY	BD/MCB
DRAWN BY	TFG
CHECKED BY	MCB

SHEET NO. 13
55 SHEETS

F.A.I RTE.	SECTION	COUNTY	TOTAL SHEETS	SHEET NO.
280	81-1 (VB) R	ROCK ISLAND	503	199
		CONTRACT NO. 64815		
FED. ROAD DIST. NO. 7	ILLINOIS	FED. AID PROJECT		

E-AS

11-1-09

PLOT DATE = 7/21/2010
FILE NAME = ...081-0018-0019-64815-013-top-east-appr-slab-elev-wb.dgn
PLOT SCALE = 82.82218 '/" / IN.
USER NAME = CFC.

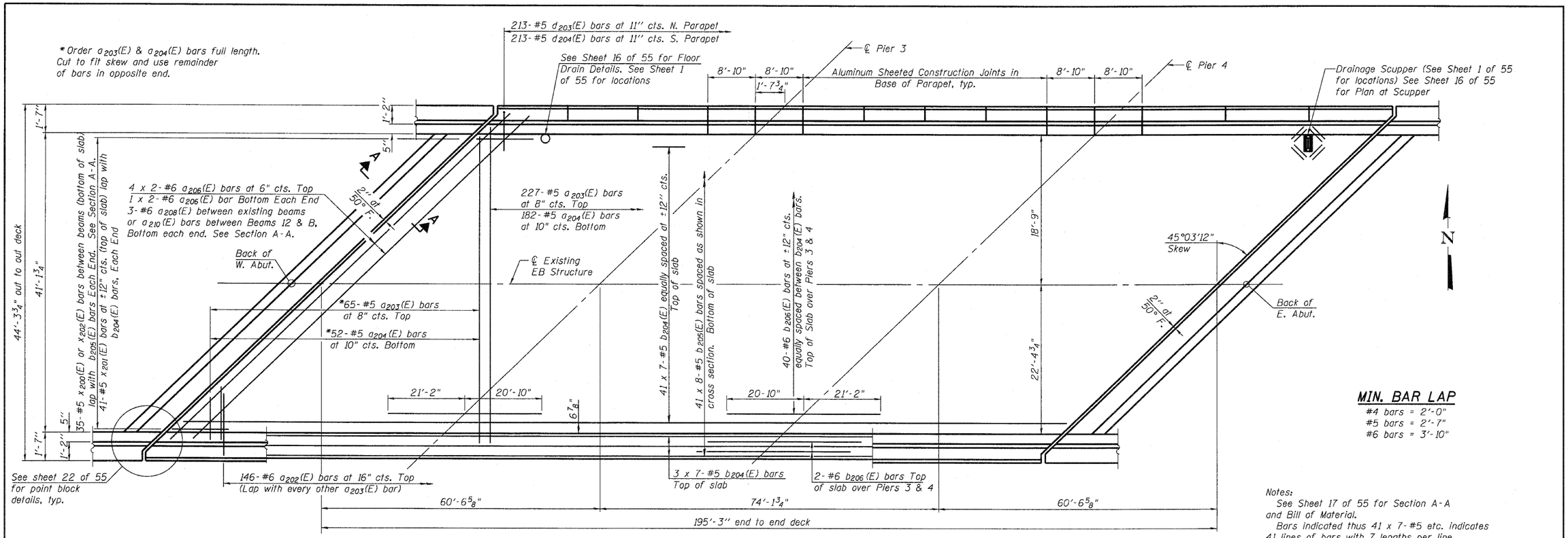

PLAN

MIN. BAR LAP

#4 bars = 2'-0"
#5 bars = 2'-7"
#6 bars = 3'-10"

Notes:
See Sheet 17 of 55 for Section A-A and Bill of Material.
Bars indicated thus 41 x 7-#5 etc. indicates 41 lines of bars with 7 lengths per line.
See Sheet 16 of 55 for parapet reinforcement.

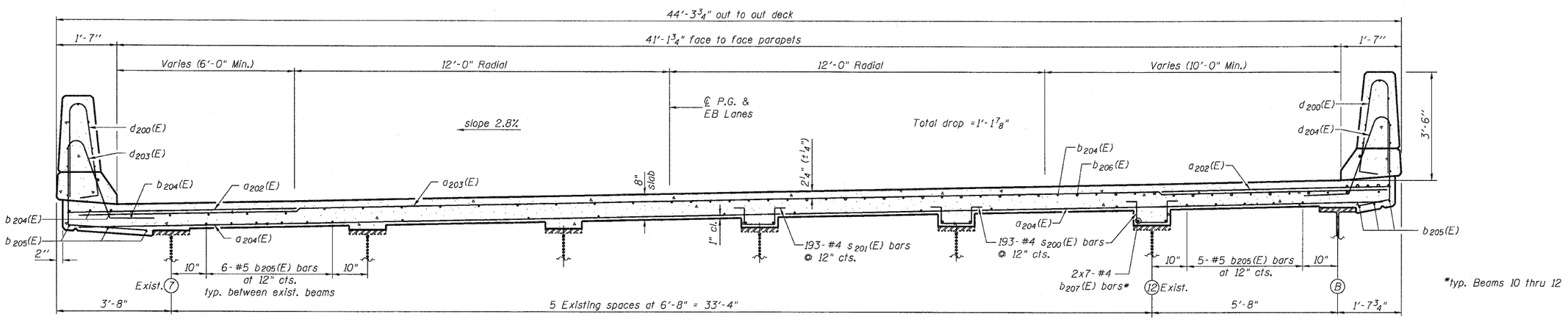

*typ. Beams 10 thru 12

(Near Midspan)

CROSS SECTION
(Looking East)

(Near Pier)

SUPERSTRUCTURE
STRUCTURE NO. 081-0018 (EB)

Coombe-Bloxdorf P.C.
-CIVIL ENGINEERS-
-STRUCTURAL ENGINEERS-
-LAND SURVEYORS-
Design Firm License No. 184-002703

PROJECT NO.	09033
SCALE	
DATE	6/4/2010
DESIGN BY	BD/MCB
DRAWN BY	TFG/MML
CHECKED BY	MCB

SHEET NO. 14
55 SHEETS

F.A.I. RTE.	SECTION	COUNTY	TOTAL SHEETS	SHEET NO.
280	81-1 (VB) R	ROCK ISLAND	503	200
		CONTRACT NO.		
FED. ROAD DIST. NO. 7	ILLINOIS	FED. AID PROJECT		

S-1-L(>30°) 11-1-09

PLOT DATE = 7/21/2010
FILE NAME = ...081-0018-0015-64815-014-dk-sch-eb.dgn
PLOT SCALE = 0.0029397 '/ IN.
USER NAME = OPC.