STATE OF ILLINOIS
DEPARTMENT OF TRANSPORTATION

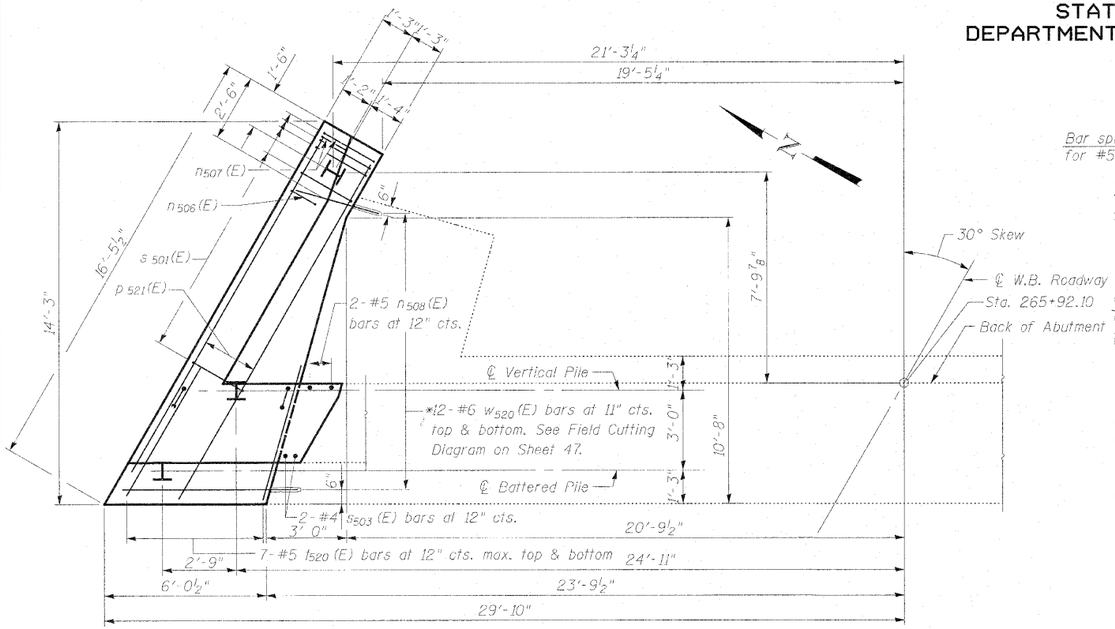

PARTIAL FOOTING PLAN

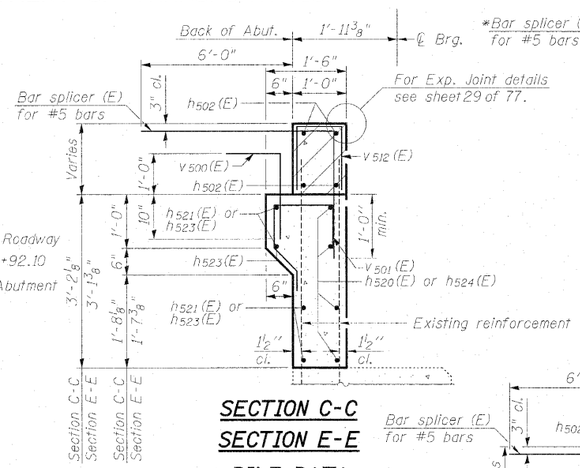

SECTION C-C
SECTION E-E

PILE DATA

Type: HP8x36 with Pile Shoes
Nominal Required Bearing: 286 kips
Allowable Resistance Available: 95 kips
Est. Length: 33'
No. Production Piles: 3
No. Test Piles: 0

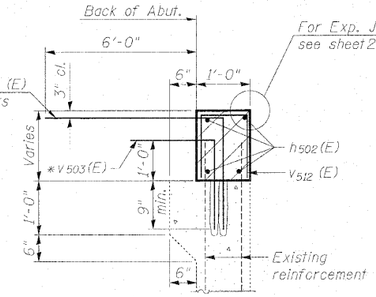

SECTION B-B

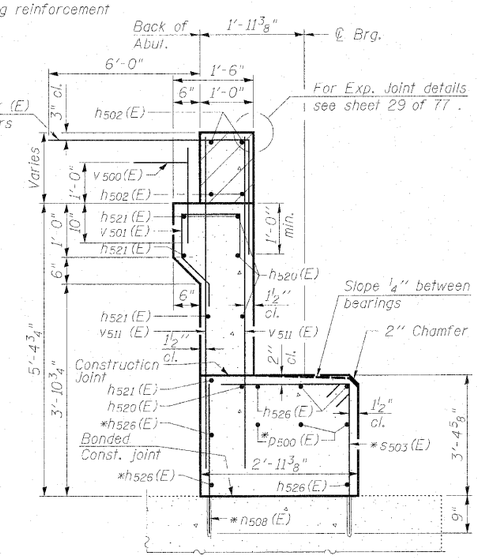

SECTION D-D

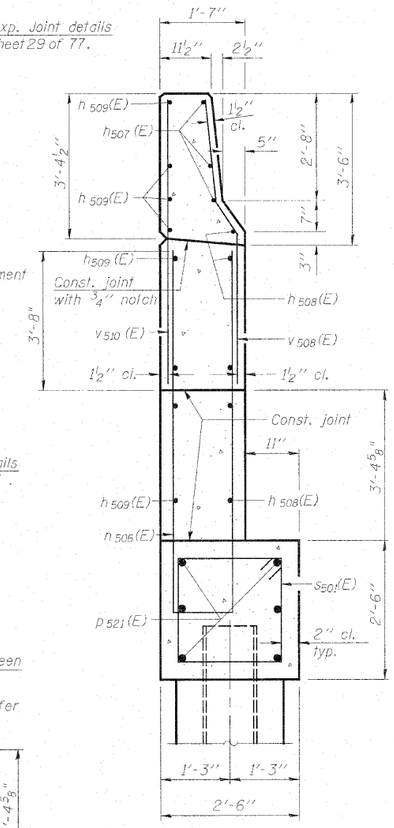

SECTION J-J

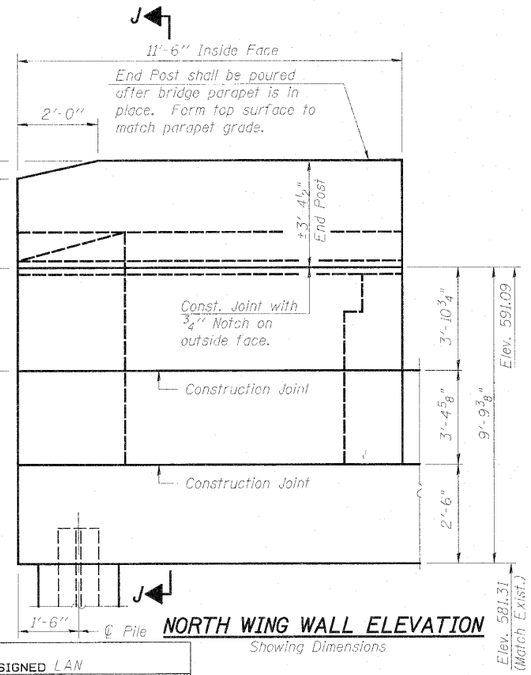

NORTH WING WALL ELEVATION
Showing Dimensions

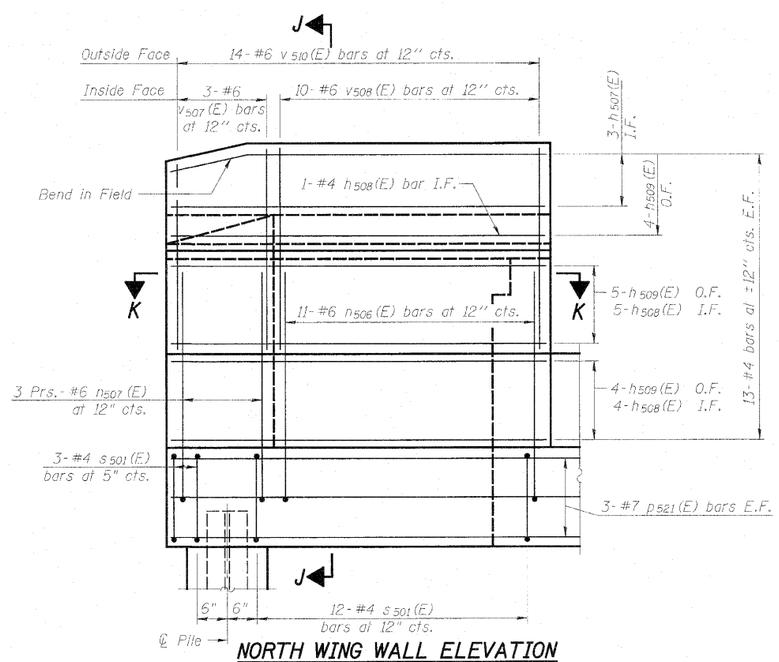

NORTH WING WALL ELEVATION
Showing Reinforcement

E.F. = Each Face
I.F. = Inside Face
O.F. = Outside Face

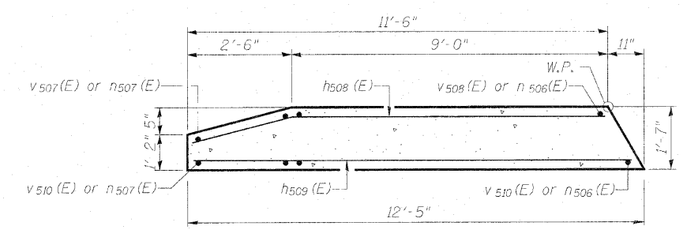

SECTION K-K

Note: See Sheet 47 of 77 for Bill of Material.

* Epoxy grout n508 (E), s503 (E), v503 (E), w520 (E) bars and bar splicer in 9" (min.) drilled holes. See Section 584 of the Standard Specifications. Cost of hole drilling and epoxy grouting are included with "Reinforcement Bars, Epoxy Coated".

Quantity of concrete in end post included with Concrete Superstructure on Sheet 22 of 77.

ABUTMENT B FOOTING WIDENING
AND NORTH WING WALL
STRUCTURE NO. 081-0024 (W.B.)
STRUCTURE NO. 081-0025 (E.B.)

DESIGNED	LAN
CHECKED	MMB
DRAWN	LAN
CHECKED	MMB

INFRASTRUCTURE ENGINEERING | INCORPORATED
33 West Monroe | Suite 1540 | Chicago, IL 60603
P 312.425.9560 | F 312.425.9564 | www.infrastructure-eng.com

SHEET NO. 46	F.A.I. RTE.	SECTION	COUNTY	TOTAL SHEETS	SHEET NO.
77 SHEETS	280	81-1(VB-1)R	ROCK ISLAND	503	382
			CONTRACT NO. 64815		
	FED. ROAD DIST. NO. _	ILLINOIS	FED. AID PROJECT		

P:\P-25\1719\DGN\Sheets\Iowa Interstate RR Final Plans\0810024-64815-046-Abut. B.F.dgn 11:44:57 AM 8/25/2010 1719_