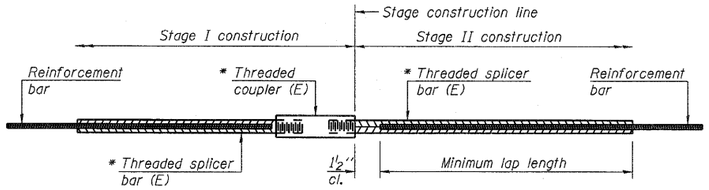

STANDARD BAR SPLICER ASSEMBLY

Minimum Lap Lengths				
Bar size to be spliced	Table 1	Table 2	Table 3	Table 4
3, 4	1'-5"	1'-11"	2'-1"	2'-4"
5	1'-9"	2'-5"	2'-7"	2'-11"
6	2'-1"	2'-11"	3'-1"	3'-6"
7	2'-9"	3'-10"	4'-2"	4'-8"
8	3'-8"	5'-1"	5'-5"	6'-2"
9	4'-7"	6'-5"	6'-10"	7'-9"

Table 1: Black bar, 0.8 Class C
Table 2: Black bar, Top bar lap, 0.8 Class C
Table 3: Epoxy bar, 0.8 Class C
Table 4: Epoxy bar, Top bar lap, 0.8 Class C

Threaded splicer bar length = min. lap length + 1½" + thread length

* Epoxy not required on Bar Splicer Assembly components used in conjunction with black bars.

Location	Bar size	No. assemblies required	Table for minimum lap length

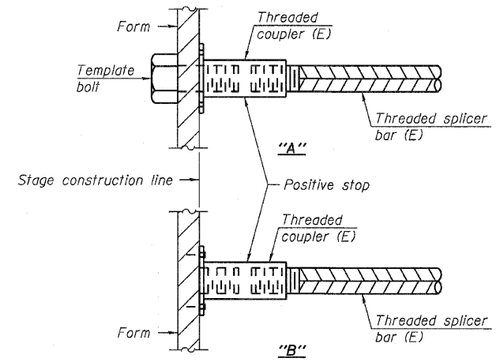

INSTALLATION AND SETTING METHODS

"A" : Set bar splicer assembly by means of a template bolt.
"B" : Set bar splicer assembly by nailing to wood forms or cementing to steel forms.
(E) : Indicates epoxy coating.

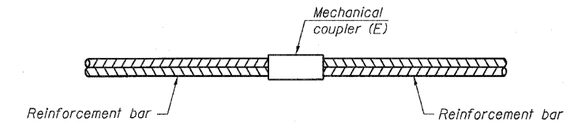

STANDARD MECHANICAL SPLICER

Location	Bar size	No. assemblies required

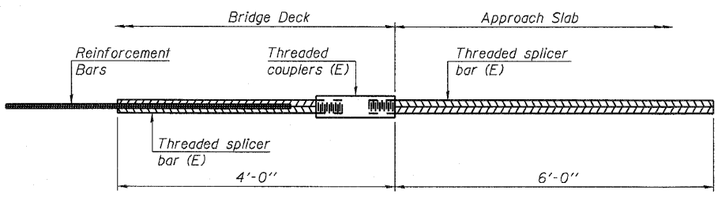

BAR SPLICER ASSEMBLY FOR #5 BAR ON INTEGRAL OR SEMI-INTEGRAL ABUTMENTS

No. required = 184

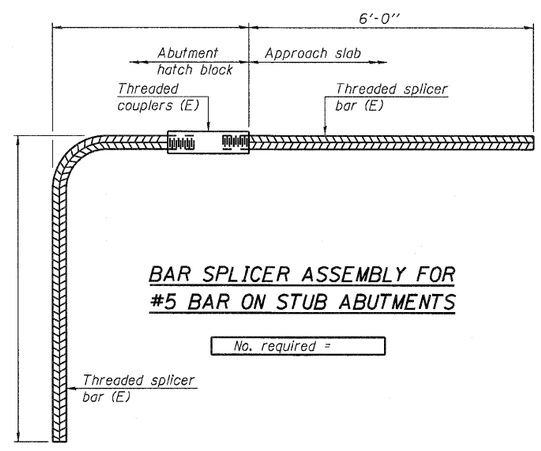

BAR SPLICER ASSEMBLY FOR #5 BAR ON STUB ABUTMENTS

No. required =

NOTES

Splicer bars shall be deformed with threaded ends and have a minimum 60 ksi yield strength.

All reinforcement shall be lapped and tied to the splicer bars.

Bar splicer assemblies shall be epoxy coated according to the requirements for reinforcement bars. See Section 508 of the Standard Specifications.

See special provision for Mechanical Splicers.

See approved list of bar splicer assemblies and mechanical splicers for alternatives.

BAR SPLICER ASSEMBLY AND MECHANICAL SPLICER DETAILS
STRUCTURE NO. 081-0190 (WB)
STRUCTURE NO. 081-0191 (EB)

BSD-1

11-1-09

PLOT DATE = 7/21/2010
FILE NAME = 0081-0190_0191-64815-035-splicer-det.dgn
PLOT SCALE = 0.0357143 ' / IN.
USER NAME = DOC.

Coombe-Bloxdorf P.C.
-CIVIL ENGINEERS-
-STRUCTURAL ENGINEERS-
-LAND SURVEYORS-
Design Firm License No. 184-002703

PROJECT NO.	09033
SCALE	
DATE	5/18/10
DESIGN BY	GB/MCB
DRAWN BY	MML
CHECKED BY	MCB

SHEET NO. 36
41 SHEETS

F.A.I. RTE.	SECTION	COUNTY	TOTAL SHEETS	SHEET NO.
280	81-1 (HB-1)	ROCK ISLAND	503	277
		CONTRACT NO. 64815		
FED. ROAD DIST. NO. 7	ILLINOIS	FED. AID PROJECT		