Notes:
Pour steps monolithically with cap.
For details of piles and Concrete Encasement, see sheet 35 of 41.
Piles are spaced to miss back row of piles supporting existing abutment.

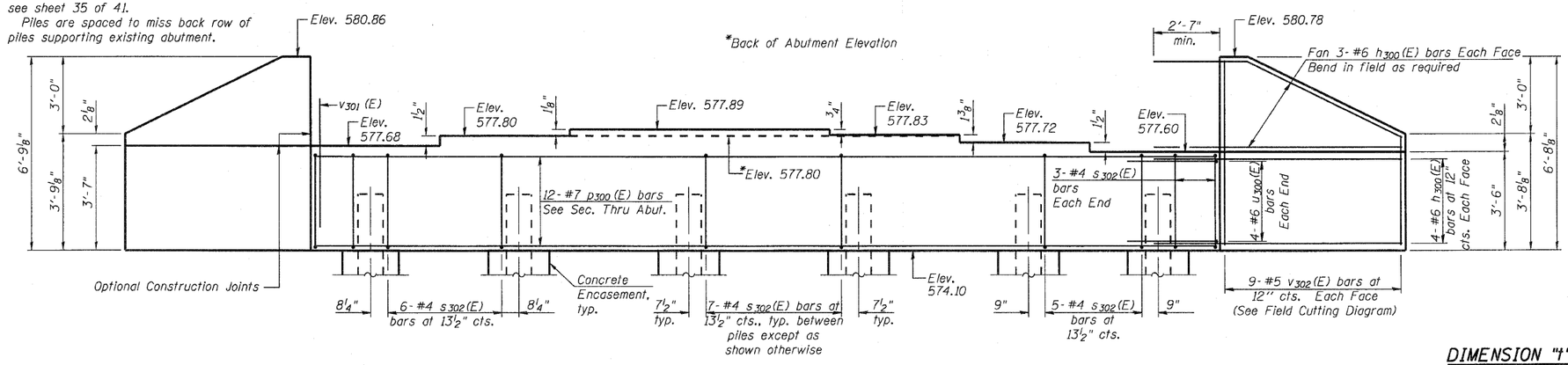

ELEVATION
(Looking West)

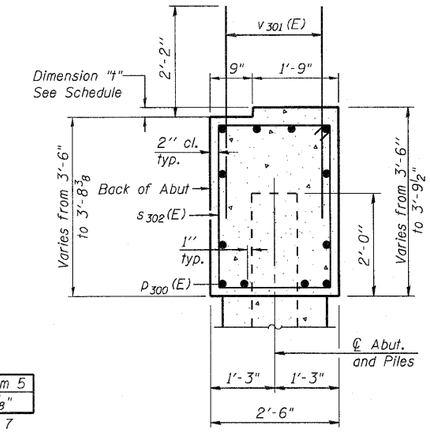

SEC. THRU ABUT.

DIMENSION "t"

	Beam 3	Beam 4	Beam 5
t	⅜"	1⅛"	1⅛"

t = 0 at Beams 1, 2, 6, and 7

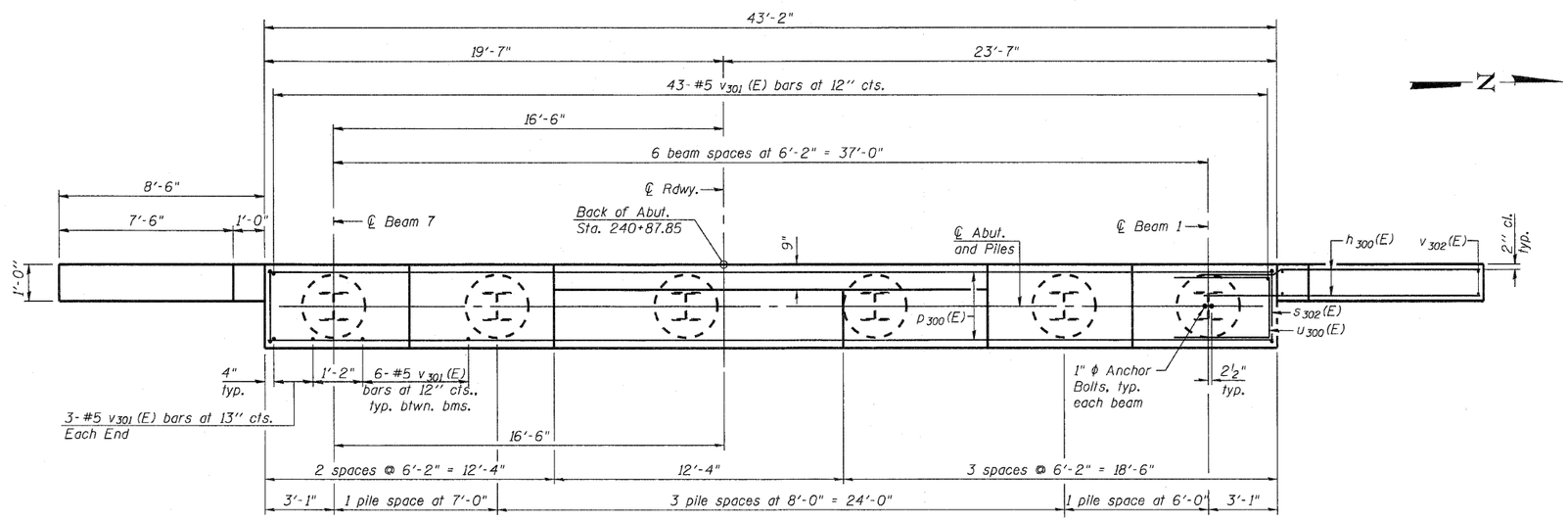

PLAN

BILL OF MATERIAL

Bar	No.	Size	Length	Shape
h300(E)	28	#6	10'-11"	
p300(E)	12	#7	42'-2"	
s302(E)	38	#4	11'-5"	
u300(E)	8	#6	7'-3"	
v301(E)	85	#5	4'-4"	
v302(E)	18	#5	9'-8"	
Structure Excavation			Cu. Yd.	78
Concrete Structures			Cu. Yd.	18.1
Reinforcement Bars, Epoxy Coated			Pound	2435
Furnishing Steel Piles, HP 10x42			Foot	144
Driving Piles			Foot	144
Concrete Encasement			Cu. Yd.	2.1
Pile Shoes			Each	6

PILE DATA

Type: HP 10x42 with pile shoes
Nominal Required Bearing: 335
Allowable Resistance Available: 112
Est. Length: 24'
No. Production Piles: 6
No. Test Piles: 0

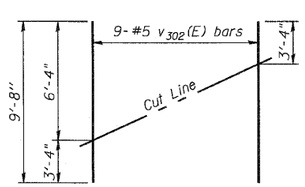

FIELD CUTTING DIAGRAM

Order v302(E) full length. Cut as shown and use remainder of bars in opposite face.

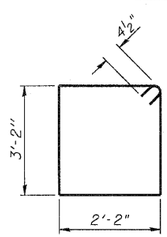

BAR s302(E)

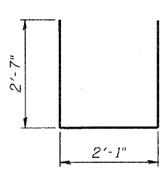

BAR u300(E)

WEST ABUTMENT
STRUCTURE NO. 081-0190 (WB)

Coombe-Bloxdorf P.C.
-CIVIL ENGINEERS-
-STRUCTURAL ENGINEERS-
-LAND SURVEYORS-
Design Firm License No. 184-002703

PROJECT NO.	09033
SCALE	
DATE	5/18/10
DESIGN BY	
DRAWN BY	MML
CHECKED BY	MCB

SHEET NO. 27
41 SHEETS

F.A.I. RTE.	SECTION	COUNTY	TOTAL SHEETS	SHEET NO.
280	81-1 (HB-1)	ROCK ISLAND	503	268
		CONTRACT NO. 64815		
FED. ROAD DIST. NO. 7	ILLINOIS	FED. AID PROJECT		

AI-0
11-1-09

PLOT DATE = 7/21/2010
FILE NAME = ...B081-0190_0191-64815-027-obx-rs#-WB.dgn
PLOT SCALE = 0.085783 ' / IN.
USER NAME = OFC.