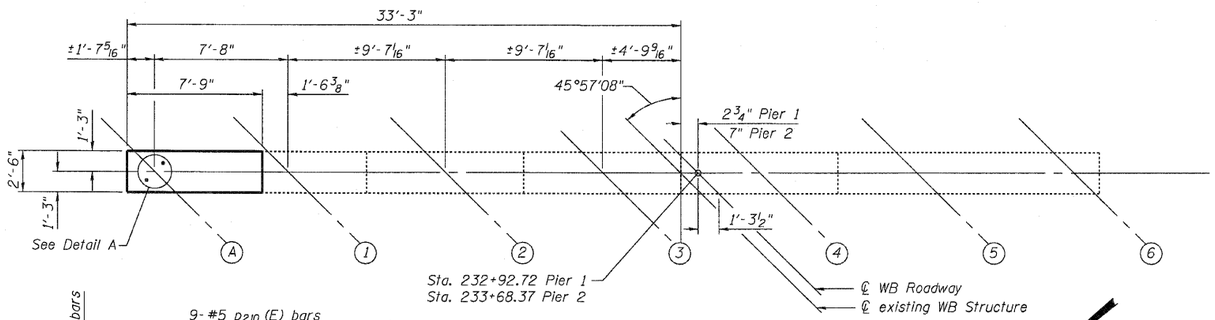

PLAN

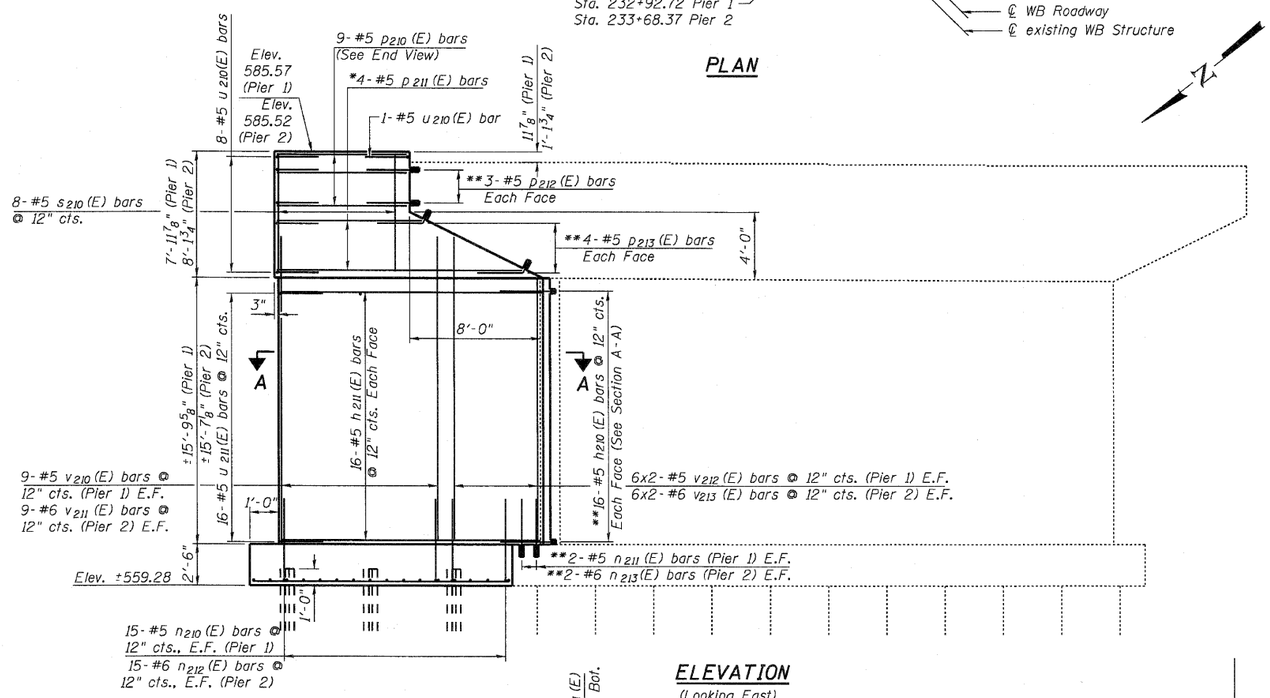

ELEVATION

(Looking East)

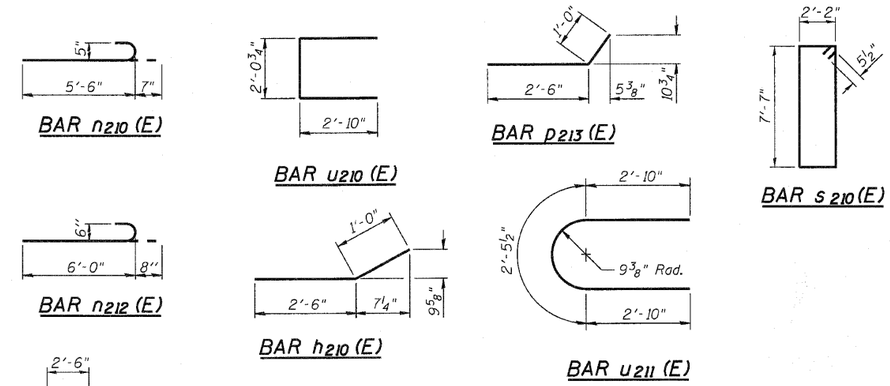

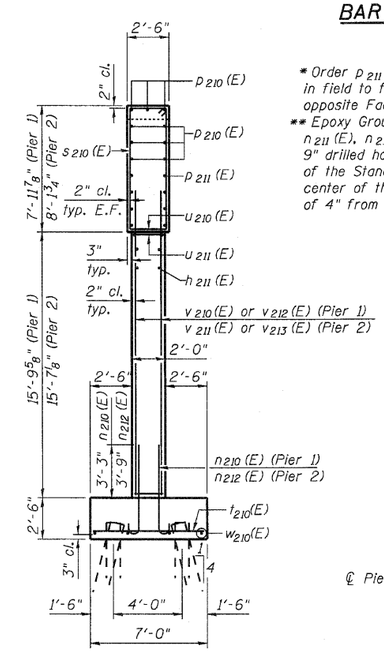

END VIEW

* Order p 211 (E) bars Full Length cut in field to fit. Use remainder in opposite Face.

** Epoxy Grout p 212(E), p 213(E), h 210(E), n 211 (E), n 213(E) and w 211 (E) bars into 9" drilled holes according to Section 584 of the Standard Specifications. The center of the holes shall be a minimum of 4" from the face of the existing structure.

MIN. LAP

#5 bar = 2'-7"
#6 bar = 3'-1"

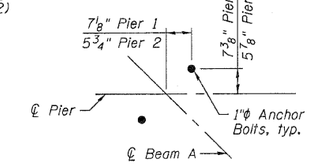

DETAIL A

BILL OF MATERIAL

Bar	No.	Size	Length	Shape
h 210 (E)	64	#5	3'-6"	
h 211 (E)	64	#5	14'-3"	
n 210 (E)	30	#5	6'-1"	
n 211 (E)	4	#5	4'-0"	
n 212 (E)	30	#6	6'-8"	
n 213 (E)	4	#6	4'-6"	
p 210 (E)	18	#5	7'-5"	
p 211 (E)	8	#5	22'-10"	
p 212 (E)	12	#5	3'-5"	
p 213 (E)	16	#5	3'-6"	
s 210 (E)	16	#5	20'-5"	
t 210 (E)	32	#7	6'-8"	
u 210 (E)	18	#5	7'-9"	
u 211 (E)	32	#5	8'-2"	
v 210 (E)	18	#5	17'-9"	
v 211 (E)	18	#6	18'-0"	
v 212 (E)	24	#5	10'-1"	
v 213 (E)	24	#6	10'-7"	
w 210 (E)	16	#5	14'-8"	
w 211 (E)	16	#5	3'-5"	
Structure Excavation		Cu. Yd.	105	
Concrete Structures		Cu. Yd.	70.0	
Reinforcement Bars, Epoxy Coated		Pound	5100	
Furnishing Steel Piles, HP 10x42		Foot	246	
Driving Piles		Foot	246	

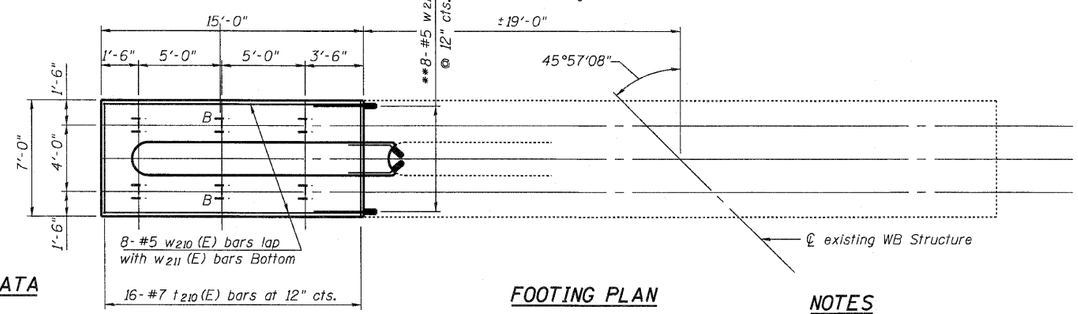

FOOTING PLAN

Note: B Denotes battered pile location

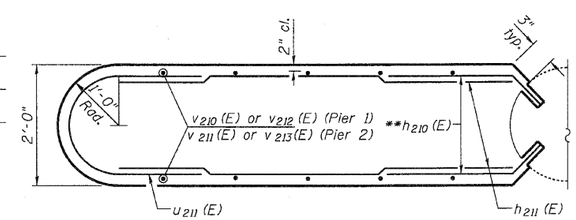

SECTION A-A

PILE DATA

Type: Steel HP 10 x 42
Nominal Required Bearing : 335 k
Allowable Resistance Avaiable : 111 k
Est. Length : 19 ft. (Pier 1)
22 ft. (Pier 2)
No. Production Piles = 6 (Pier 1)
6 (Pier 2)
No. of Test Piles = 0

NOTES

Space reinforcement in cap to miss anchor bolts.
All construction joints between new construction and existing concrete shall be Bonded Construction Joints.
All edges shall have 3/4" chamfers except as noted.

PIERS 1 & 2
STRUCTURE NO. 081-0019 (WB)

Coombe-Bloxdorf P.C.
-CIVIL ENGINEERS-
-STRUCTURAL ENGINEERS-
-LAND SURVEYORS-
Design Firm License No. 184-002703

PROJECT NO.	09033
SCALE	
DATE	6/4/2010
DESIGN BY	BD/MCB
DRAWN BY	MML
CHECKED BY	MCB

SHEET NO. 45
55 SHEETS

F.A.I. RTE.	SECTION	COUNTY	TOTAL SHEETS	SHEET NO.
280	81-1 (VB) R	ROCK ISLAND	503	231
		CONTRACT NO. 64815		
FED. ROAD DIST. NO. 7	ILLINOIS	FED. AID PROJECT		

PLOT DATE = 7/21/2010
FILE NAME = ...R081-0018-0019-64815-045-piers-1-2-wb.dgn
PLOT SCALE = 0d.025397 ' = 1 IN.
USER NAME = OFC.