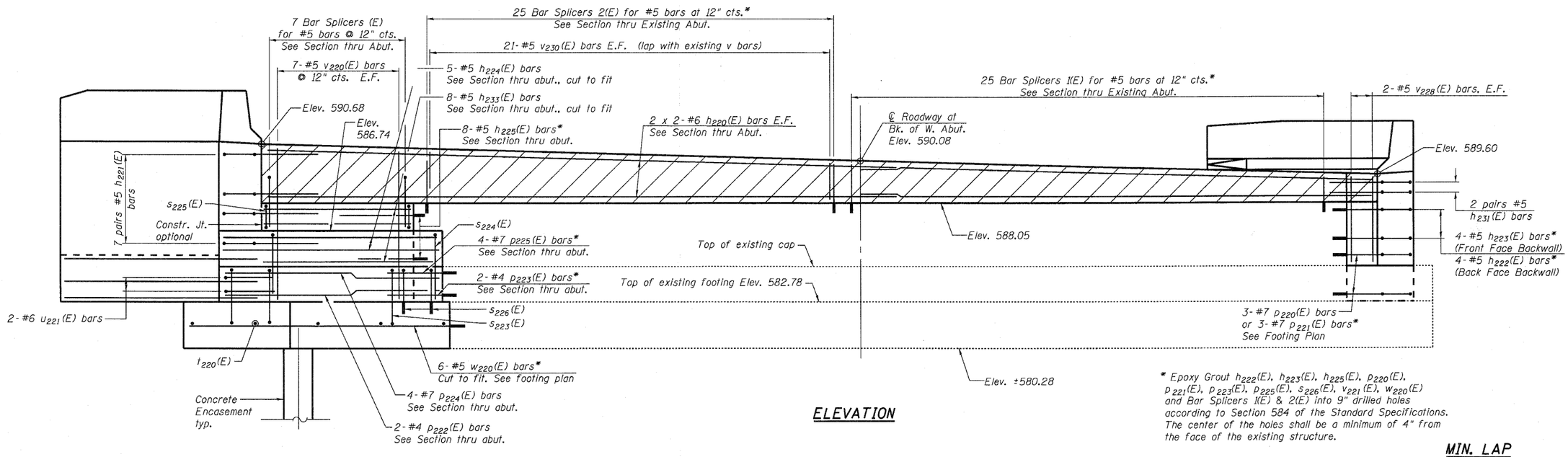

ELEVATION

* Epoxy Grout h222(E), h223(E), h225(E), p220(E), p221(E), p223(E), p225(E), s226(E), v221(E), w220(E) and Bar Splicers 1(E) & 2(E) into 9" drilled holes according to Section 584 of the Standard Specifications. The center of the holes shall be a minimum of 4" from the face of the existing structure.

MIN. LAP

#6 bar = 4'-5"

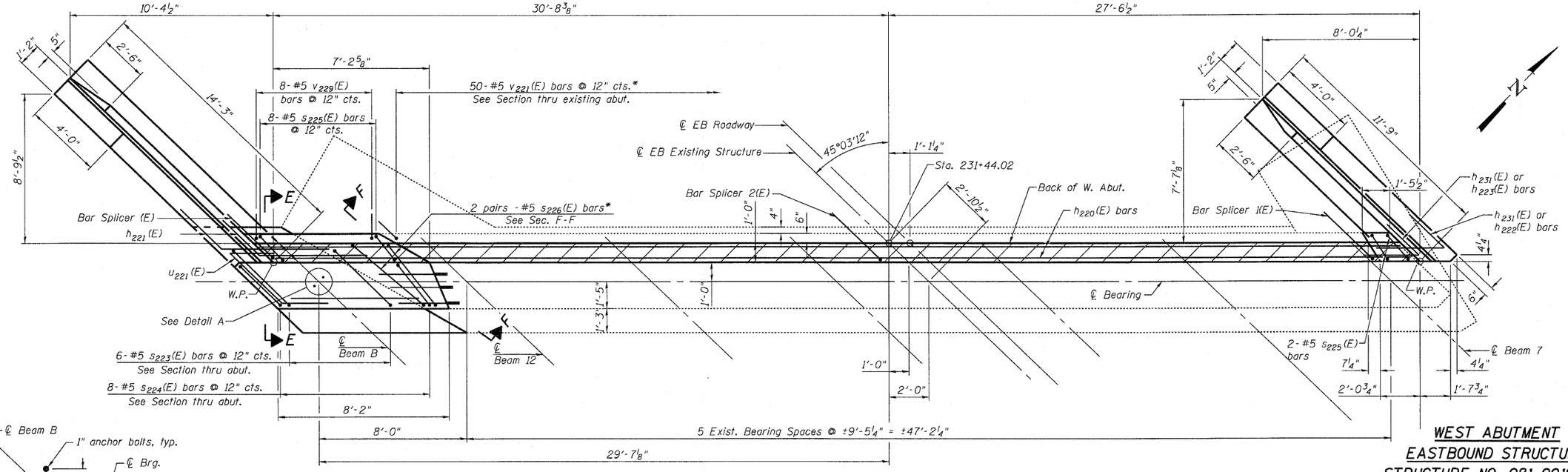

PLAN

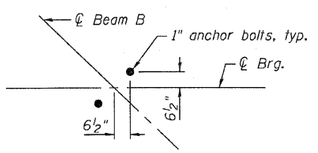

DETAIL A

Work this Sheet with Sheets 34 and 35 of 55.

WEST ABUTMENT
EASTBOUND STRUCTURE
STRUCTURE NO. 081-0018 (EB)

Coombe-Bloxdorf P.C.
-CIVIL ENGINEERS-
-STRUCTURAL ENGINEERS-
-LAND SURVEYORS-
Design Firm License No. 184-002703

PROJECT NO.	09033
SCALE	
DATE	6/4/2010
DESIGN BY	BD/MCB
DRAWN BY	TFG
CHECKED BY	MCB

SHEET NO. 33
55 SHEETS

F.A.I. RTE.	SECTION	COUNTY	TOTAL SHEETS	SHEET NO.
280	81-1 (VB) R	ROCK ISLAND	503	219
		CONTRACT NO. 64815		
FED. ROAD DIST. NO. 7	ILLINOIS	FED. AID PROJECT		

PLOT DATE = 7/21/2010
FILE NAME = ...081-0018-0019-64815-033-eb-west-abut.dgn
PLOT SCALE = 246.942953 ' / IN.
USER NAME = CFC.