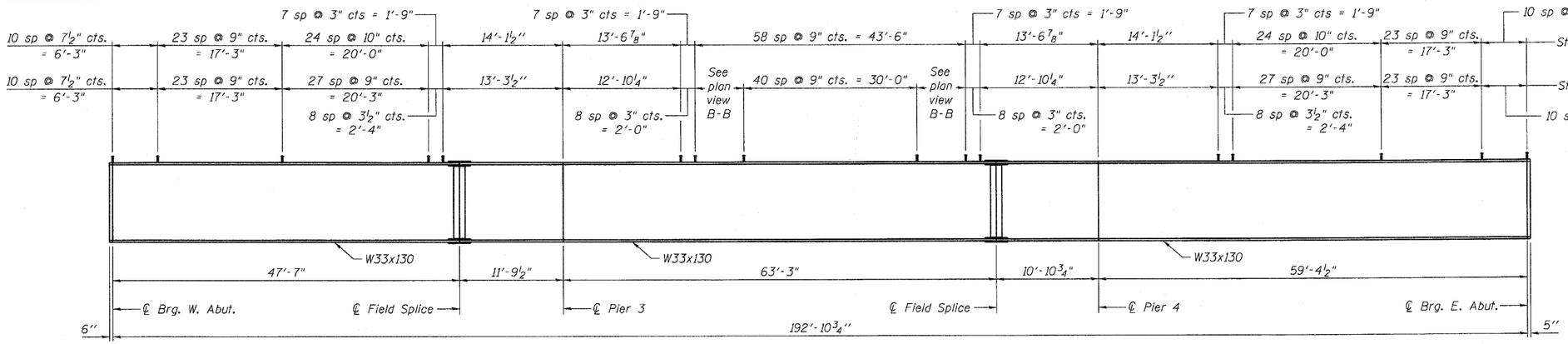

BEAM ELEVATION EASTBOUND STRUCTURE

(Showing Beam B and shear stud spacing for all beams)

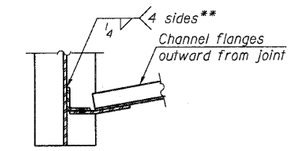

SECTION A-A

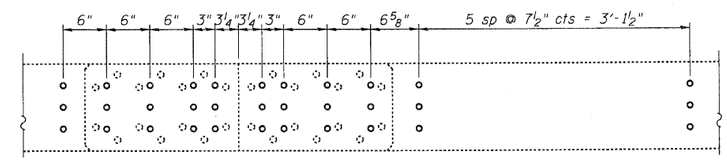

PLAN VIEW B-B

(Showing shear stud layout at existing beam splices)

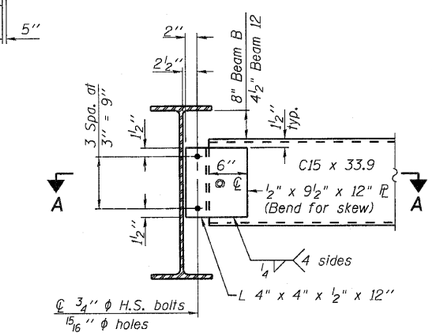

DIAPHRAGM D_2

(2 Required)

Note:
Two hardened washers required for each set of oversized holes.

BEAM B MOMENT TABLE				
		0.4 Sp. 1 or 0.6 Sp. 3	Piers	0.5 Sp. 2
I_s	(in^4)	6710	6710	6710
$I_c(n)$	(in^4)	15,777	-	15,777
$I_c(3n)$	(in^4)	11,414	-	11,414
S_s	(in^3)	406	406	406
$S_c(n)$	(in^3)	568	-	568
$S_c(3n)$	(in^3)	509	-	509
$\wp$	(k/')	0.604	0.604	0.604
$M\wp$	('k)	148	271	145
$s\wp$	(k/')	0.148	0.148	0.148
$M_s\wp$	('k)	40.8	55.4	47.3
M_L	('k)	355.7	221	368.6
M_{IM}	('k)	96.1	59.4	92.6
$\frac{5}{3}[M_L + I]$	('k)	753	467	769
M_a	('k)	1225	1032	1250
M_u	('k)	1601	-	1601
f_s $\wp$ non-comp	(ksi)	4.4	8.0	4.3
f_s $\wp$ (comp)	(ksi)	1.0	1.6	1.1
f_s $\frac{5}{3}[M_L + M_I]$	(ksi)	15.9	13.8	16.2
f_s (Overload)	(ksi)	21.3	23.4	21.6
f_s (Total)	(ksi)	-	30.4	-
VR	(k)	37.5	-	37.5

I_s, S_s: Non-composite moment of inertia and section modulus of the steel section used for computing f_s(Total and Overload) due to non-composite dead loads (in.^{4} and in.^{3}).

$I_c(n)$, $S_c(n)$: Composite moment of inertia and section modulus of the steel and deck based upon the modular ratio, "n", used for computing f_s(Total and Overload) due to short-term composite live loads (in.^{4} and in.^{3}).

$I_c(3n)$, $S_c(3n)$: Composite moment of inertia and section modulus of the steel and deck based upon 3 times the modular ratio, "3n", used for computing f_s(Total and Overload) due to long-term composite (superimposed) dead loads (in.^{4} and in.^{3}).

$\wp$: Un-factored non-composite dead load (kips/ft.).

$M\wp$: Un-factored moment due to non-composite dead load (kip-ft.).

$s\wp$: Un-factored long-term composite (superimposed) dead load (kips/ft.)

$M_s\wp$: Un-factored moment due to long-term composite (superimposed) dead load (kip-ft.).

M_L: Un-factored live load moment (kip-ft.).

M_I: Un-factored moment due to impact (kip-ft.).

M_a: Factored design moment (kip-ft.).
$1.3\ [\ M\wp + M_s\wp + \frac{5}{3}\ (M_L + M_I)]$

M_u: Compact composite moment capacity according to AASHTO LFD 10.50.1.1 or compact non-composite moment capacity according to AASHTO LFD 10.48.1 (kip-ft.).

f_s (Overload): Sum of stresses as computed from the moments below (ksi).
$M\wp + M_s\wp + \frac{5}{3}\ (M_L + M_I)$

f_s (Total): Sum of stresses as computed from the moments below on non-compact section (ksi).
$1.3\ [M\wp + M_s\wp + \frac{5}{3}\ (M_L + M_I)]$

VR: Maximum L + impact shear range within the composite portion of the span for stud shear connector design (kips).

BEAM B REACTION TABLE			
		Abut.	Pier
$R\wp$	(k)	16.8	55.8
R_L	(k)	30.5	37.6
R_I	(k)	8.2	10.2
R_{Total}	(k)	55.5	103.6

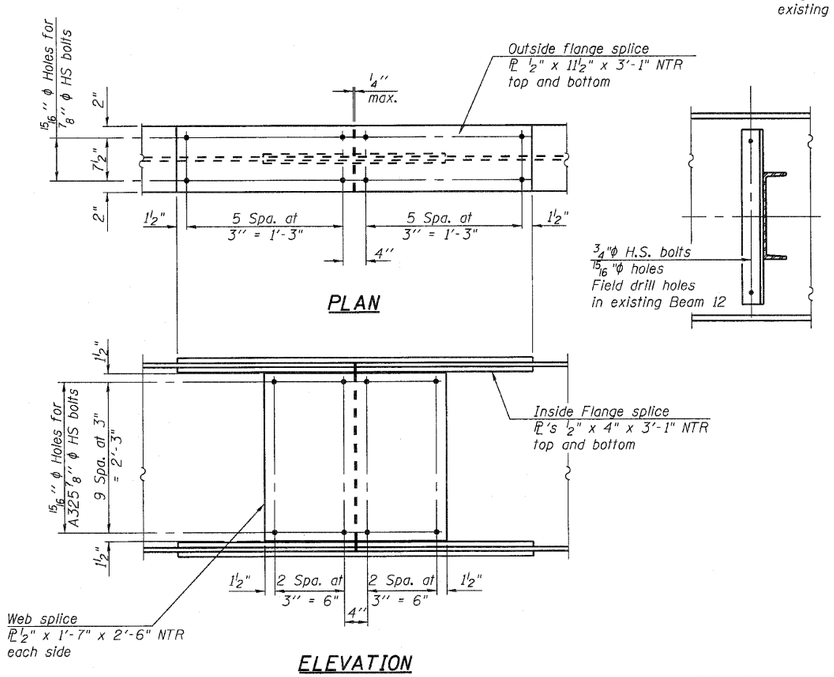

PLAN

ELEVATION

SPLICE DETAIL

(2 Required)

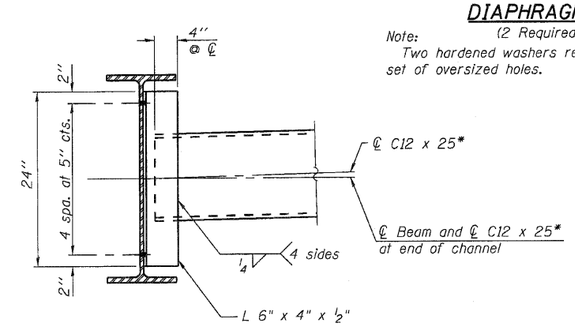

DIAPHRAGM D_3

(8 required)

Note:
Two hardened washers required for each set of oversized holes.

Diaphragms shall be installed as steel is erected and secured with erection pins and bolts except as otherwise noted. Individual diaphragms at supports may be temporarily disconnected to install bearing anchor rods.

* Alternate C 12 x 30 channels are permitted to facilitate material acquisition. Calculated weight of structural steel is based on the lighter section. The alternate, if utilized, shall be provided at no cost to the Department.

** Field weld at existing beam 12

STRUCTURAL STEEL DETAILS
STRUCTURE NO. 081-0018 (EB)

Coombe-Bloxdorf P.C.
-CIVIL ENGINEERS-
-STRUCTURAL ENGINEERS-
-LAND SURVEYORS-
Design Firm License No. 184-002703

PROJECT NO.	09033
SCALE	
DATE	6/4/2010
DESIGN BY	BD/MCB
DRAWN BY	MML
CHECKED BY	MCB

SHEET NO. 25
55 SHEETS

F.A.I. RTE.	SECTION	COUNTY	TOTAL SHEETS	SHEET NO.
280	81-1 (VB) R	ROCK ISLAND	503	211
		CONTRACT NO. 64815		
FED. ROAD DIST. NO. 7	ILLINOIS	FED. AID PROJECT		

PLOT DATE = 7/21/2010
FILE NAME = ...B081-0018-0019-64815-025-stl_det_eb.dgn
PLOT SCALE = 240.705529 ' / IN.
USER NAME = CFC.