TOP OF WEB ELEVATIONS (For fabrication only)

	Girder 1	Girder 2	Girder 3	Girder 4	Girder 5	Girder 6	Girder 7	Girder 8	Girder 9	Girder 10	Girder 11	Girder 12	Girder 13	Girder 14
℄ Brg. S. Abut.	587.39	587.53	587.66	587.76	587.81	587.68	587.52	587.42	587.53	587.62	587.52	587.37	587.18	587.00
℄ Splice 1	587.49	587.64	587.79	587.91	587.99	587.87	587.73	587.70	587.83	587.94	587.86	587.73	587.56	587.40
℄ Pier	587.44	587.60	587.76	587.89	587.96	587.85	587.72	587.72	587.85	587.96	587.89	587.76	587.60	587.44
℄ Splice 2	587.40	587.56	587.73	587.86	587.94	587.83	587.70	587.73	587.87	587.99	587.91	587.79	587.64	587.49
℄ Brg. N. Abut.	587.00	587.18	587.37	587.52	587.62	587.53	587.42	587.52	587.68	587.81	587.76	587.66	587.53	587.39

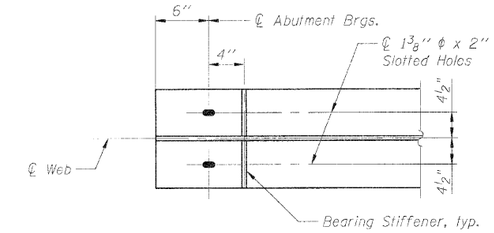

SECTION C-C

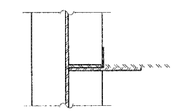

SECTION B-B

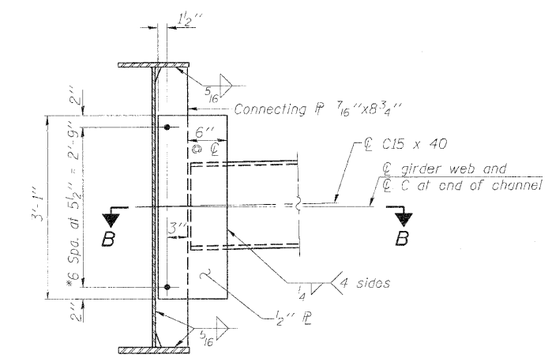

INTERIOR DIAPHRAGM D

(180 Required)

Note:
Two hardened washers required for each set of oversized holes.
* 3/4" ϕ HS bolts, 15/16" ϕ holes
Alternate channels C15x50 are permitted to facilitate material acquisition. Calculated weight of structural steel is based on C15x40 sections. The alternate, if utilized, shall be provided at no extra cost to the contract.

INTERIOR GIRDER MOMENT TABLE			
		0.4 Sp. 1 or 0.6 Sp. 2	Pier
I_s	(in^4)	28,286	68,416
$I_c(n)$	(in^4)	72,052	-
$I_c(3n)$	(in^4)	50,992	-
S_s	(in^3)	1437	2582
$S_c(n)$	(in^3)	1876	-
$S_c(3n)$	(in^3)	1733	-
Z	(in^3)	-	-
w	(k/')	1.11	1.77
Mw	('k)	1285	4921
sw	(k/')	0.49	-
$M_s w$	('k)	619	-
M_L	('k)	1240	1395
M_{IM}	('k)	232	262
$\frac{5}{3}[M_L + I]$	('k)	2454	2761
M_a	('k)	5704	9986
* M_u	('k)	8127	-
f_s w non-comp	(ksi)	10.73	22.87
f_s w (comp)	(ksi)	4.49	-
f_s $\frac{5}{3}[M_L + M_I]$	(ksi)	15.70	12.83
f_s (Overload)	(ksi)	30.92	35.70
** f_s (Total)	(ksi)	-	46.42
VR	(k)	65	-

* Compact section
** Braced non-compact and partially braced section

INTERIOR GIRDER REACTION TABLE			
		Abut.	Pier
R_w	(k)	78.7	296.2
R_L	(k)	48.9	92.9
R_I	(k)	9.2	17.4
R_{Total}	(k)	136.8	406.5

I_s, S_s: Non-composite moment of inertia and section modulus of the steel section used for computing f_s (Total and Overload) due to non-composite dead loads ($in.^4$ and $in.^3$).

$I_c(n)$, $S_c(n)$: Composite moment of inertia and section modulus of the steel and deck based upon the modular ratio, "n", used for computing f_s (Total and Overload) due to short-term composite live loads ($in.^4$ and $in.^3$).

$I_c(3n)$, $S_c(3n)$: Composite moment of inertia and section modulus of the steel and deck based upon 3 times the modular ratio, "3n", used for computing f_s (Total and Overload) due to long-term composite (superimposed) dead loads ($in.^4$ and $in.^3$).

Z: Plastic Section Modulus of the steel section in non-composite areas ($in.^3$).

w: Un-factored non-composite dead load (kips/ft.).

Mw: Un-factored moment due to non-composite dead load (kip ft.).

sw: Un-factored long-term composite (superimposed) dead load (kips/ft.)

$M_s w$: Un-factored moment due to long-term composite (superimposed) dead load (kip-ft.).

M_L: Un-factored live load moment (kip-ft.).

M_I: Un-factored moment due to impact (kip-ft.).

M_a: Factored design moment (kip-ft.).
$1.3\ [\ Mw + M_s w + \frac{5}{3}\ (M_L + M_I)]$

M_u: Compact composite moment capacity according to AASHTO LFD 10.50.1.1 or compact non-composite moment capacity according to AASHTO LFD 10.48.1 (kip-ft.).

f_s (Overload): Sum of stresses as computed from the moments below (ksi).
$Mw + M_s w + \frac{5}{3}\ (M_L + M_I)$

f_s (Total): Sum of stresses as computed from the moments below on non-compact section (ksi).
$1.3\ [Mw + M_s w + \frac{5}{3}\ (M_L + M_I)]$

VR: Maximum L + impact shear range within the composite portion of the span for stud shear connector design (kips).

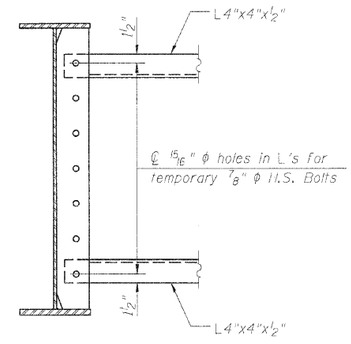

ARTICULATED TEMPORARY BRACING

Install bracing during Stage II steel erection. After Stage II deck pour, remove Articulated Temporary Bracing and replace with permanent bracing. Permanent bracing must be in place prior to Closure Pour. Cost incidental to F & E Structural Steel Bridge No. 6.

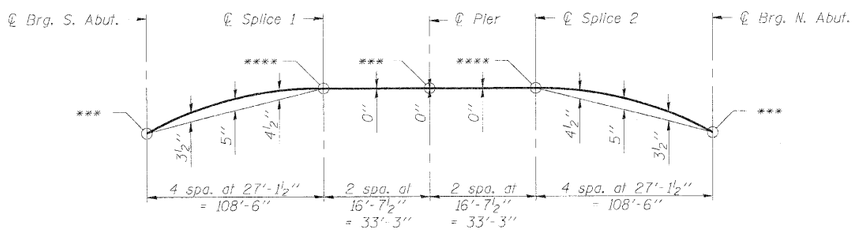

CAMBER DIAGRAM

*** See Table for Final Top of Web Elevation at abutment and piers.
**** Theoretical Top of Web Elevations before dead load deflections.

STRUCTURAL STEEL DETAILS
STRUCTURE NUMBERS 081-0188 (S.B.) & 081-0189 (N.B.)

PROFESSIONAL DESIGN FIRM LICENSE #184-001084

© Copyright Hanson Professional Services Inc. 2010

HANSON
Hanson Professional Services Inc.

JOB NO.	SHEET NO. 30	F.A.I. RTE.	SECTION	COUNTY	TOTAL SHEETS	SHEET NO.
05R1532A	50 SHEETS	280	81-1(HB)R	Rock Island	503	163
DATE 07/23/10		CONTRACT NO. 64815				
		ILLINOIS FED. AID PROJECT				

LAYOUT	JKR/FLN	04/05/10
DRAWN	MDW/JDM	07/21/10
REVIEWED	JKR/FLN	07/21/10

07-22-2010
c:\pwworking\d0\d1532\P0081884\R15-030-STR_S11_Det.dgn