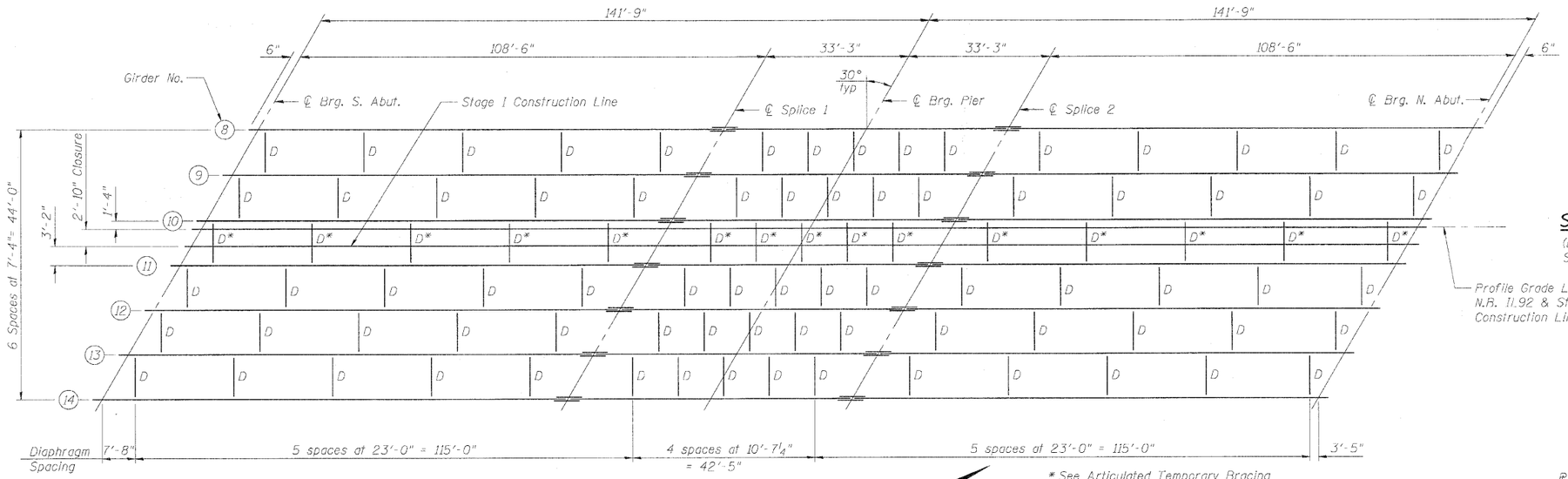

* See Articulated Temporary Bracing Detail on Sheet 30 of 30.

FRAMING PLAN

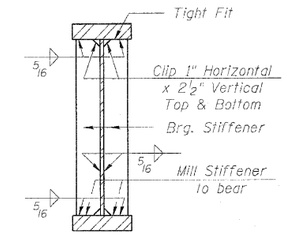

SECTION THRU BEARING STIFFENER

(Bearing Stiffeners at abutments and pier)
See Girder Elevation for dimensions of bearing stiffeners

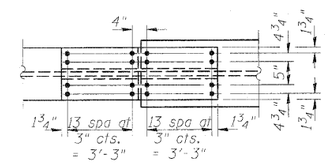

TOP FLANGE

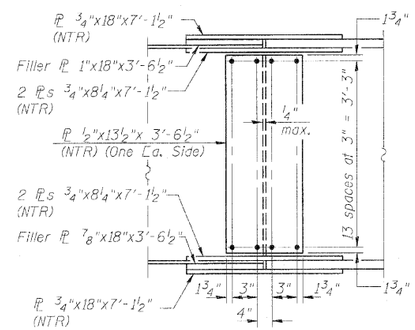

WEB

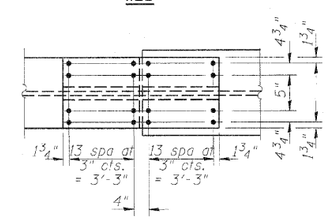

BOTTOM FLANGE

SPLICE #1 & #2 DETAIL

Splice #1 Looking West
Splice #2 Looking East

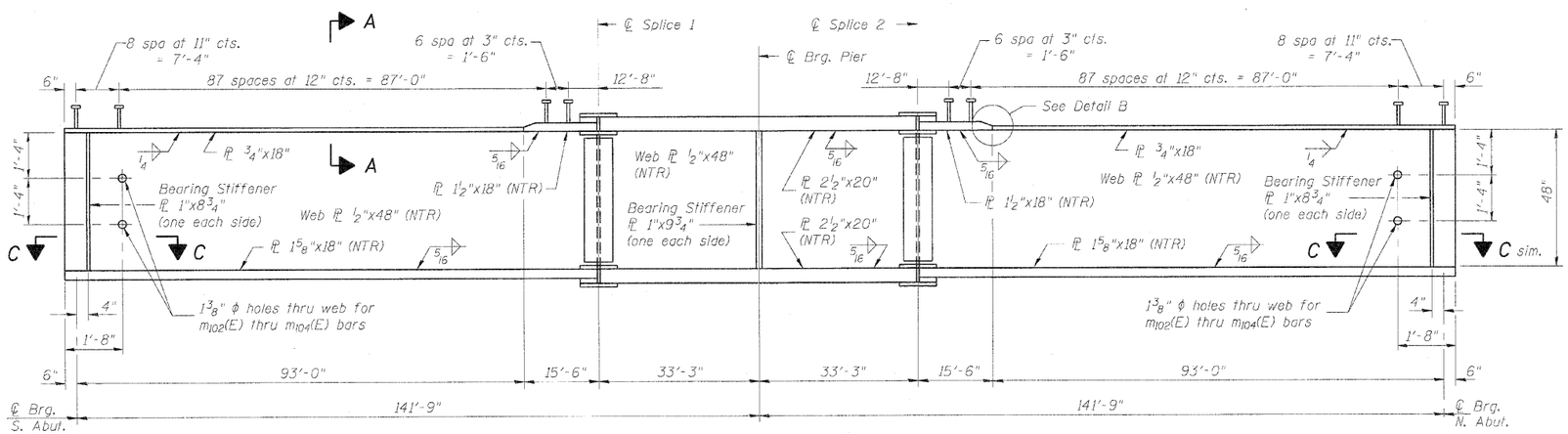

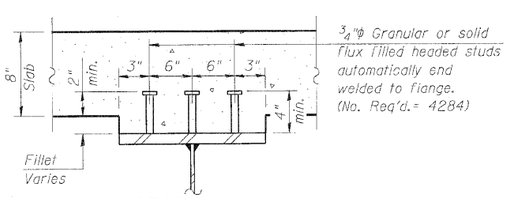

SECTION A-A

GIRDER ELEVATION

(Looking West)

Notes:

All beams and splice plates, except filler plates, shall be AASHTO M270 Grade 50.

All diaphragms shall be installed as steel is erected and secured with erection pins and bolts except as otherwise noted. Individual diaphragms at supports may be temporarily disconnected to install bearing anchor rods.

Load carrying components designated "NTR" shall conform to the requirements of Notch Toughness, Zone 2.

See Sheet 30 of 50 for Diaphragm.

See Sheet 30 of 50 for Section C-C.

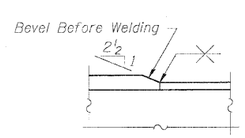

DETAIL B

PROFESSIONAL DESIGN FIRM LICENSE #184-001084

© Copyright Hanson Professional Services Inc. 2010

HANSON
Hanson Professional Services Inc.

STRUCTURAL STEEL - N.B.
STRUCTURE NUMBERS 081-0188 (S.B.) & 081-0189 (N.B.)

JOB NO.		F.A.I. RTE.	SECTION	COUNTY	TOTAL SHEETS	SHEET NO.
05R1532A	SHEET NO. 28	280	81-1(HB)R	Rock Island	503	161
DATE 07/23/10	50 SHEETS			CONTRACT NO. 64815		
			ILLINOIS FED. AID PROJECT			

LAYOUT	KEVIN	04/05/10
DRAWN	KEVIN, DM	07/21/10
REVIEWED	KEVIN	07/21/10

07/22/2010
c:\pwidot\workdir_net_deleted\HSPC\081088 & 081-0189 Str Sht_NB.dgn