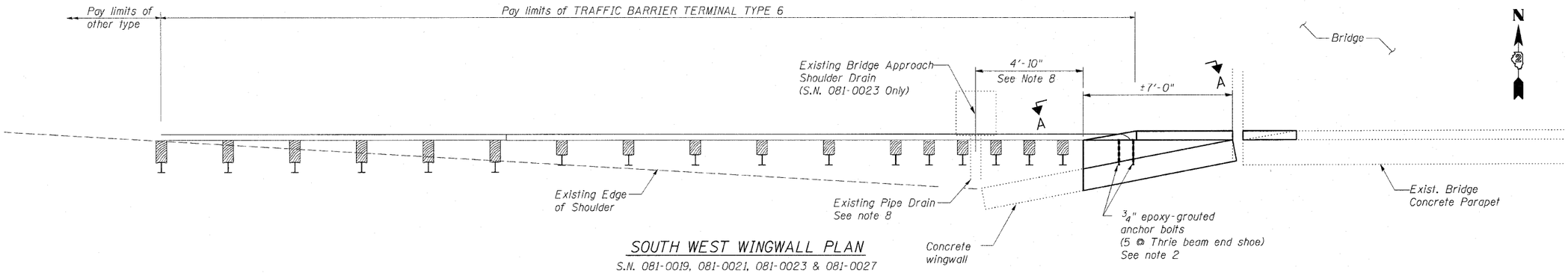

SOUTH WEST WINGWALL PLAN

S.N. 081-0019, 081-0021, 081-0023 & 081-0027

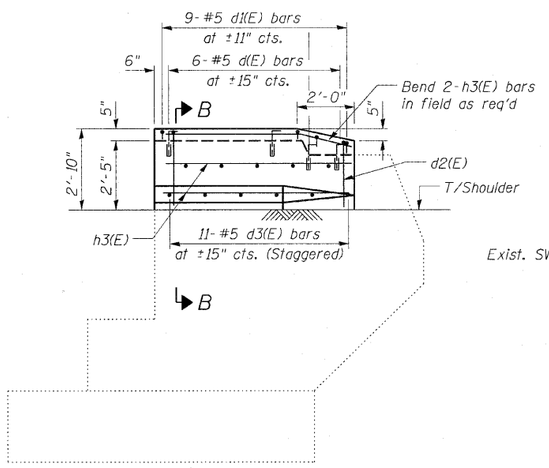

VIEW A-A

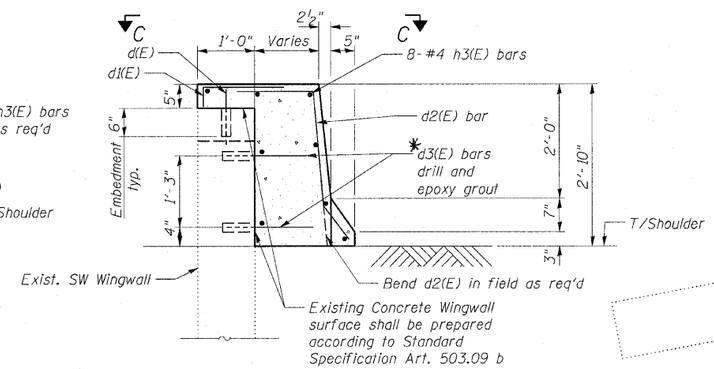

SECTION B-B

✱ Drilling and epoxy grouting to be done according to Art. 584 of the Standard Specs.

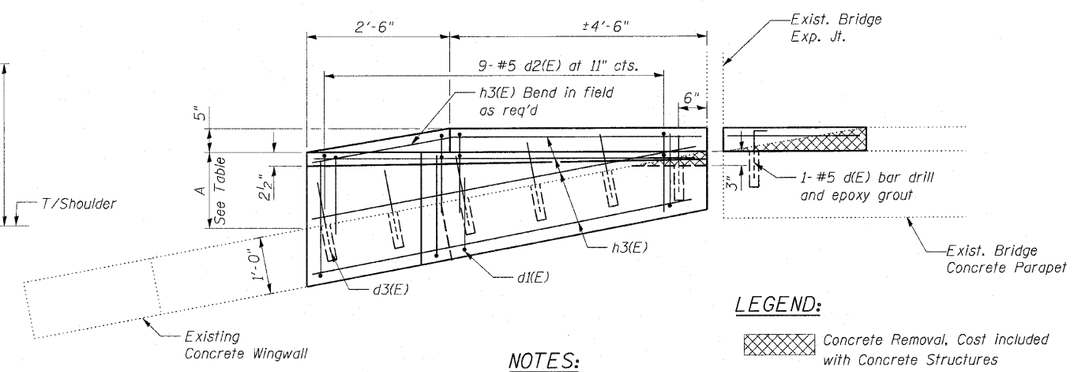

SECTION C-C

Verify dimensions in the field

S.N.	Dimension A
081-0019	1'-9"
081-0021	1'-9"
081-0023	1'-9"
081-0027	1'-8"

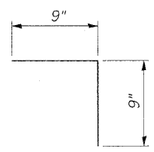

BAR d(E)

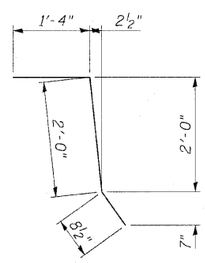

BAR d2(E)

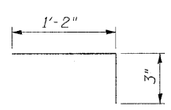

BAR d1(E)

BILL OF MATERIAL

Total for 4 Structures

Bar	Number	Size	Length	Shape
h3(E)	32	#4	6'-8"	
d(E)	28	#5	1'-6"	
d1(E)	36	#5	1'-5"	
d2(E)	36	#5	4'-0½"	
d3(E)	44	#5	1'-3"	
REINFORCEMENT BARS, EPOXY COATED			POUND	450
CONCRETE STRUCTURES			CU YD	3.7
PROTECTIVE COAT			SQ YD	17

LEGEND:

Concrete Removal. Cost included with Concrete Structures

NOTES:

1. Plan dimensions and details relative to existing plans are subject to nominal construction variations. The Contractor shall field verify existing dimensions and details affecting new construction and make necessary approved adjustments prior to construction or ordering of materials. Such variations shall not be cause for additional compensation for a change in scope of the work, however, the Contractor will be paid for the quantity actually furnished at the unit price bid for the work.
2. See Standard 631033-09 for other details and notes.
3. The cost of drilling and epoxy grouting of bars is included with **Reinforcement Bars, Epoxy Coated.**
4. Protective Coat shall be applied to all new concrete areas.
5. Reinforcement bars shall conform to the requirements of ASTM A 706 Gr 60. See Special Provisions.
6. Reinforcement bars designated (E) shall be epoxy coated.
7. Existing reinforcement shall be cleaned and incorporated into the new construction. Cost included with Concrete Structures.
8. For Structure S.N. 081-0023 only - Locate the pipe drain and to establish the end of new widened wingwall at ±4'-10" from ℄ of pipe to avoid conflict with the guardrail posts. Use extreme caution during post installation to prevent damage to the pipe.

* 81-1(B-1, HB, HB-1, HB-2, VB, VB-1)R

FILE NAME = c:\pw_work\pwidot\condermanee\d0179717\b284502_br-patch-sht.dgn	USER NAME = condermanee	DESIGNED - ---	REVISED - ---
		DRAWN - ---	REVISED - ---
	PLOT SCALE = 50.0000 ' / IN.	CHECKED - ---	REVISED - ---
	PLOT DATE = Tue Aug 31 10:00:34 2010	DATE - -------	REVISED - ---

STATE OF ILLINOIS
DEPARTMENT OF TRANSPORTATION

TRAFFIC BARRIER TERMINAL, TYPE 6 ATTACHMENT
081-0019, 081-0021, 081-0023, 081-0027

SCALE: ------- | SHEET NO. -- OF --- SHEETS | STA. ------- TO STA. -------

F.A.I. RTE.	SECTION	COUNTY	TOTAL SHEETS	SHEET NO.
280	*	ROCK ISLAND		133 B
		CONTRACT NO. 64815		
		ILLINOIS FED. AID PROJECT		