CONTRACT NO. 62479

F.A.P. RTE.	SECTION	COUNTY	TOTAL SHEETS	SHEET NO.
353	(12&13)WRS-3	WILL	1235	793
STA.		TO STA.		
FED. ROAD DIST. NO.	ILLINOIS	FED. AID PROJECT		

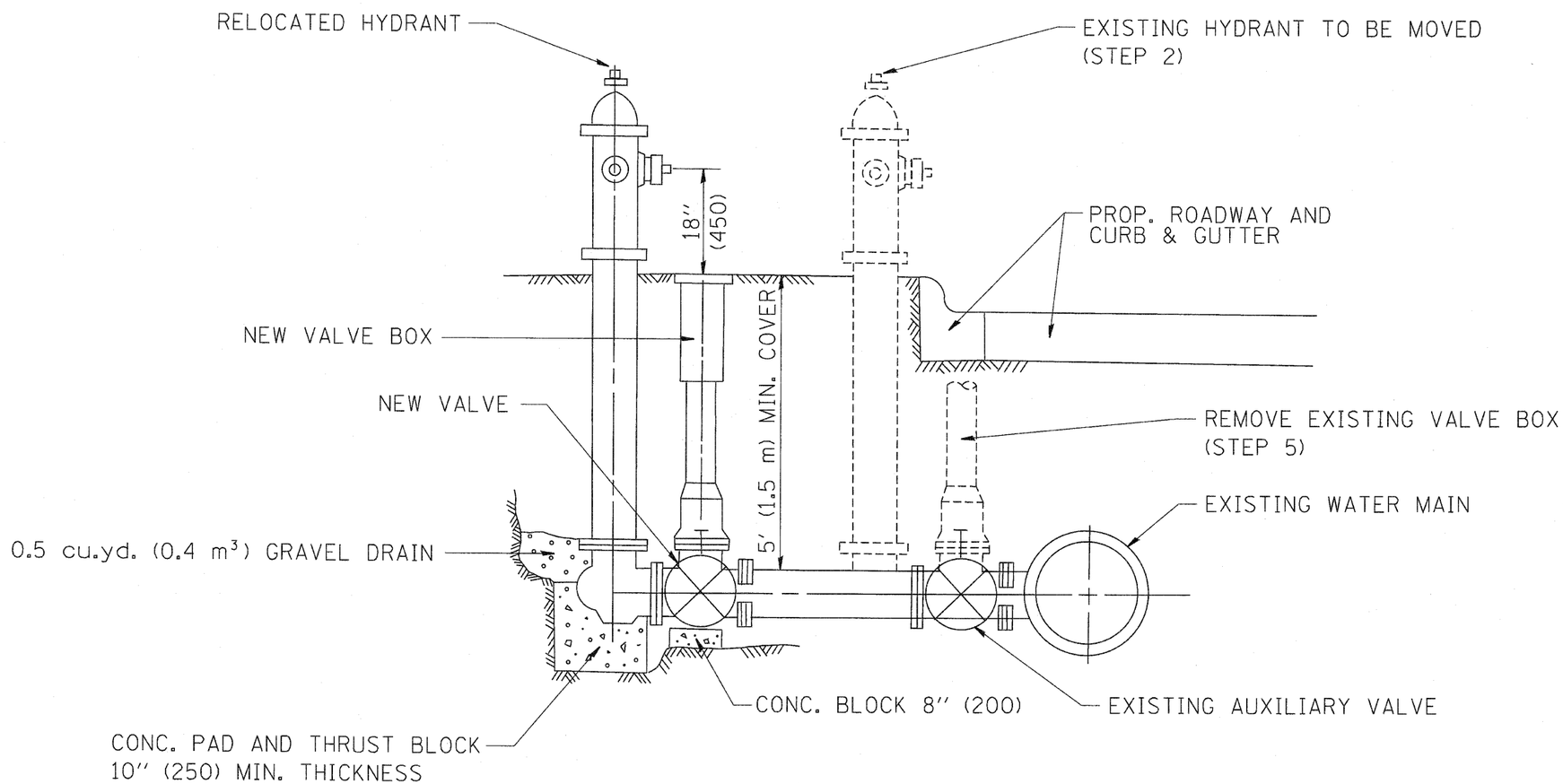

SEQUENCE OF CONSTRUCTION:

1. CLOSE EXISTING VALVE.
2. REMOVE EXISTING HYDRANT.
3. INSTALL HYDRANT EXTENSION AND NEW VALVE.
4. RELOCATE EXISTING HYDRANT.
5. OPEN EXISTING VALVE, REMOVE BOX.
6. BACKFILL.
7. FLUSH AND TEST FOR CHLORIDE RESIDUAL AND PROVIDE TEST.

ALL WORK TO BE DONE IN ACCORDANCE WITH ARTICLE 564 OF THE STANDARD SPECIFICATIONS. NEW VALVE AND BOX SHALL BE SAME MAKE AND MODEL AS EXISTING.

FIRE HYDRANT TO BE MOVED

ALL DIMENSIONS ARE IN INCHES (MILLIMETERS) UNLESS OTHERWISE SHOWN.

REVISIONS	
NAME	DATE
R. SHAH	09/09/94
R. SHAH	10/25/94

ILLINOIS DEPARTMENT OF TRANSPORTATION

FIRE HYDRANT TO BE MOVED

SCALE: VERT. NONE HORIZ.

DRAWN BY

CHECKED BY

BD500-03 (BD-36)

PLOT DATE = 3/5/2007
FILE NAME = K:\dists\d\bd36.dgn
PLOT SCALE = 50.0000 ' / IN.
USER NAME = bauerdl