F.A.I RTE.	SECTION	COUNTY	TOTAL SHEETS	SHEET NO.
190	0102.1 S	COOK	107	83
FED. ROAD DIST. NO.	ILLINOIS	FED. AID PROJECT		

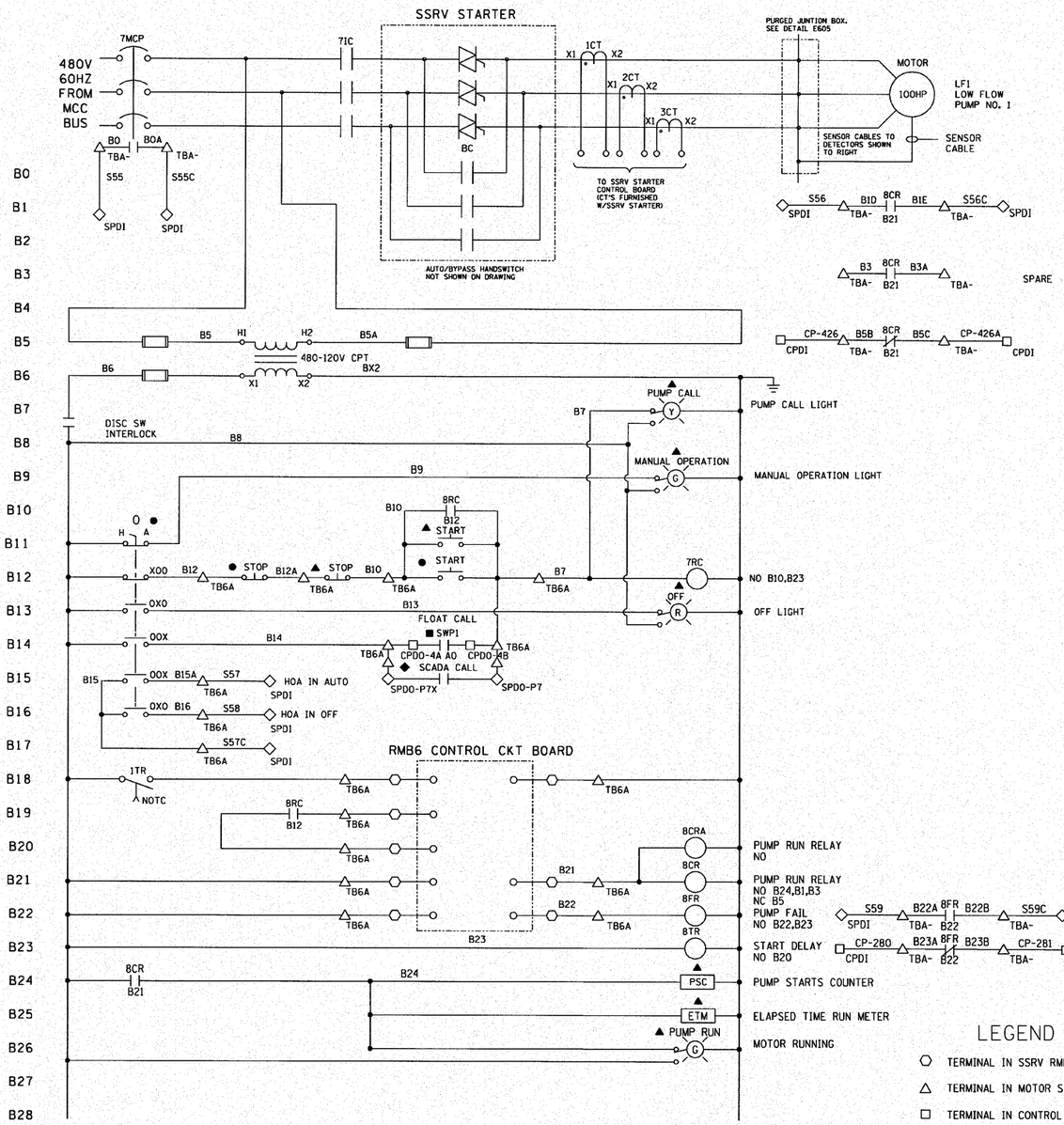

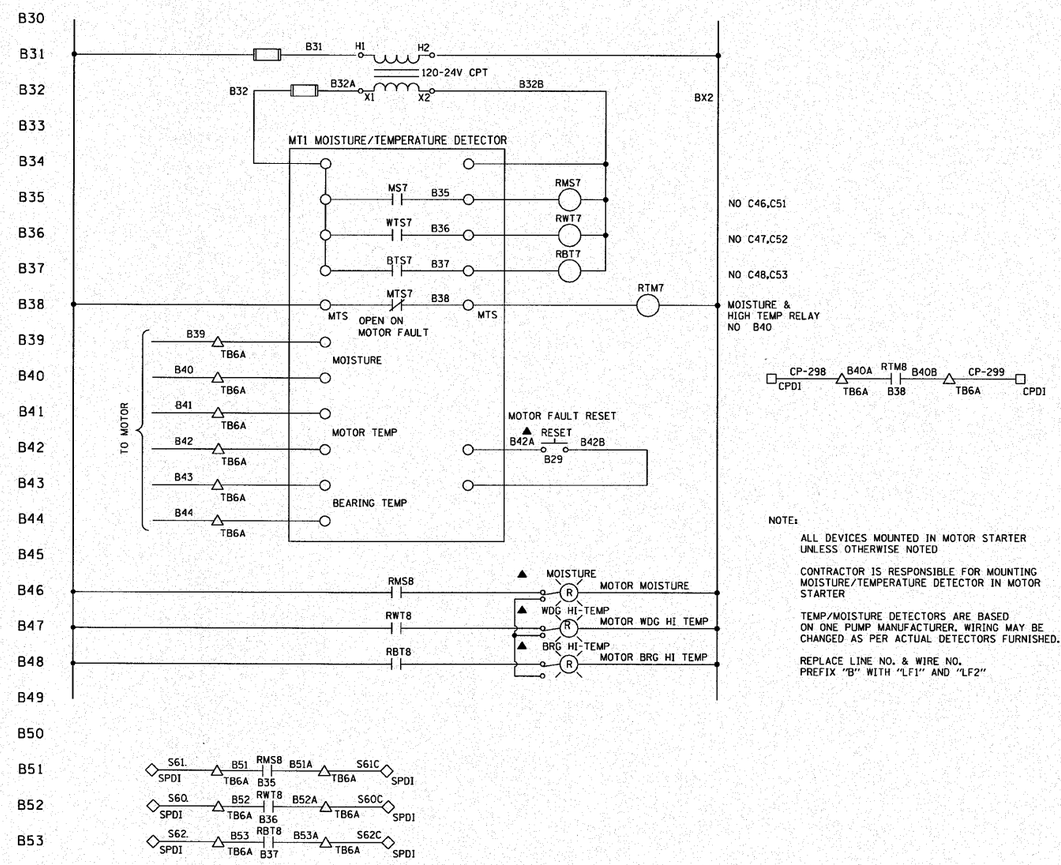

NOTE:

ALL DEVICES MOUNTED IN MOTOR STARTER UNLESS OTHERWISE NOTED

CONTRACTOR IS RESPONSIBLE FOR MOUNTING MOISTURE/TEMPERATURE DETECTOR IN MOTOR STARTER

TEMP/MOISTURE DETECTORS ARE BASED ON ONE PUMP MANUFACTURER. WIRING MAY BE CHANGED AS PER ACTUAL DETECTORS FURNISHED.

REPLACE LINE NO. & WIRE NO. PREFIX "B" WITH "LF1" AND "LF2"

LEGEND

- TERMINAL IN SSRV RMB6
- TERMINAL IN MOTOR STARTER
- TERMINAL IN CONTROL PANEL
- TERMINAL IN SCADA PANEL
- DEVICE LOCATED ON STARTER DOOR
- DEVICE LOCALLY MTD
- DEVICE IN CONTROL PANEL
- DEVICE IN SCADA PANEL

LOW FLOW PUMP 1 CONTROL SCHEMATIC

(TYPICAL FOR LOW FLOW PUMP 2)

DONOHUE & ASSOCIATES

E10

REVISIONS	
NAME	DATE

ILLINOIS DEPARTMENT OF TRANSPORTATION

PUMP STATION NO. 24 RELOCATION

LOW FLOW PUMP CONTROL SCHEMATIC

SCALE: N/A DRAWN BY: CRP

DATE: 11-22-10 CHECKED BY: KHC