F.A.I RTE.	SECTION	COUNTY	TOTAL SHEETS	SHEET NO.
190	0102.1 S	COOK	107	58
FED. ROAD DIST. NO.	ILLINOIS	FED. AID PROJECT		

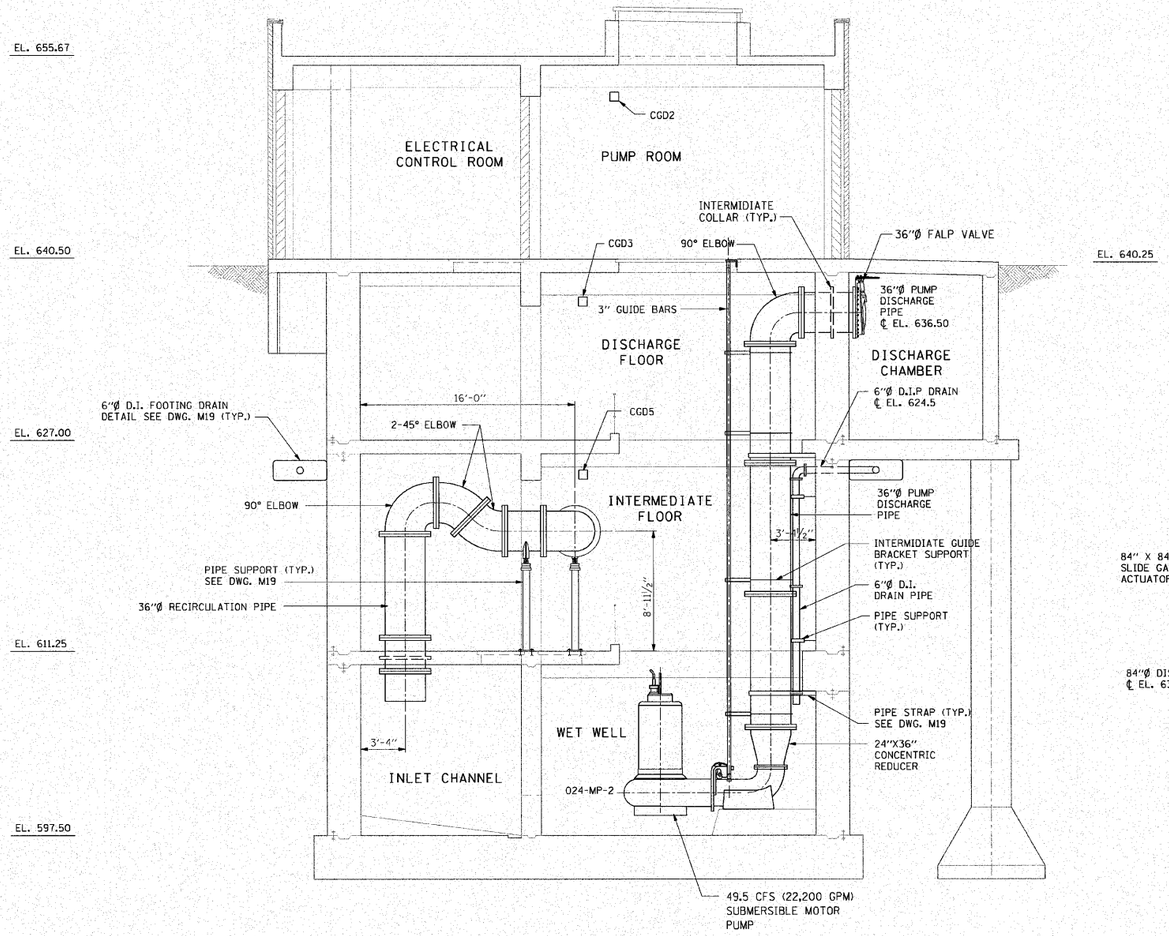

SECTION A – A

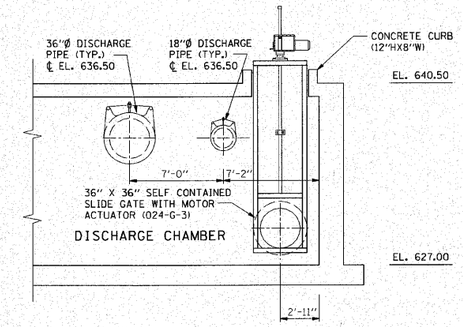

SECTION F – F

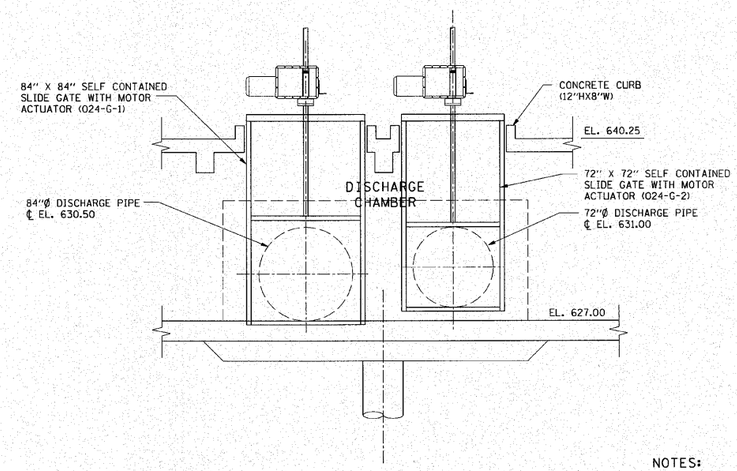

SECTION G – G

NOTES:

1. ALL ROOMS EXCEPT ELECTRICAL ROOM SHALL BE CLASS I, DIVISION 1, GROUP D EXPLOSION PROOF.
2. HVAC ITEMS AND DESCRIPTIONS NOT SHOWN FOR SECTION A-A.
3. SEE DRAWING RW9 FOR UNDERDRAINS FOR STRUCTURES.

DONOHUE & ASSOCIATES

SCALE: 0 4 8 12

M5

REVISIONS	
NAME	DATE

ILLINOIS DEPARTMENT OF TRANSPORTATION

PUMP STATION NO. 24 RELOCATION

MECHANICAL SECTION

SCALE: AS SHOWN DRAWN BY: HFF

DATE: 11-22-10 CHECKED BY: KHC