F.A.I RTE.	SECTION	COUNTY	TOTAL SHEETS	SHEET NO.
190	0102.1 S	COOK	107	8
FED. ROAD DIST. NO.	ILLINOIS	FED. AID PROJECT		

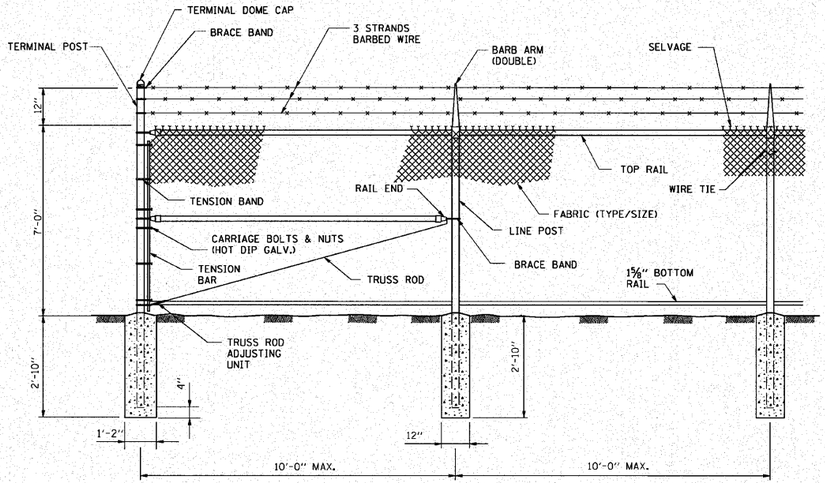

FENCE DETAIL

NOT TO SCALE

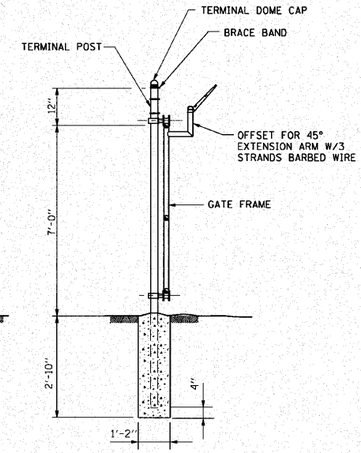

SECTION 1–1

NOT TO SCALE

NOTES:

1. ALL MATERIALS SHALL BE HOT DIP GALVANIZED
2. ALL FITTINGS SHALL BE PRESSED STEEL.

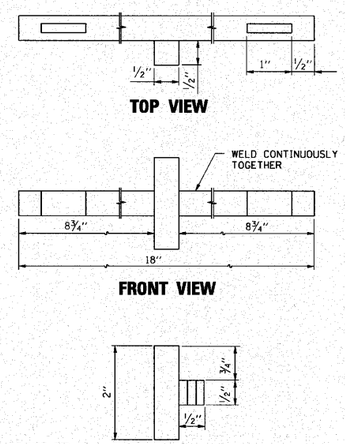

PART A

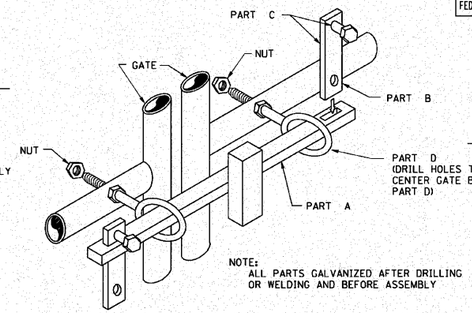

NOTE:
ALL PARTS GALVANIZED AFTER DRILLING OR WELDING AND BEFORE ASSEMBLY

SWING GATE LOCKING DEVICE

NOT TO SCALE

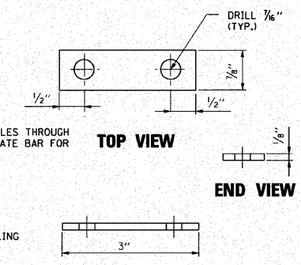

PART B

PART C IS FABRICATED THE SAME WITH A BOLT INTO EACH HOLE

PART C

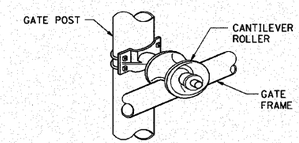

CANTILEVER ROLLER ASSEMBLY (4 REQ'D)

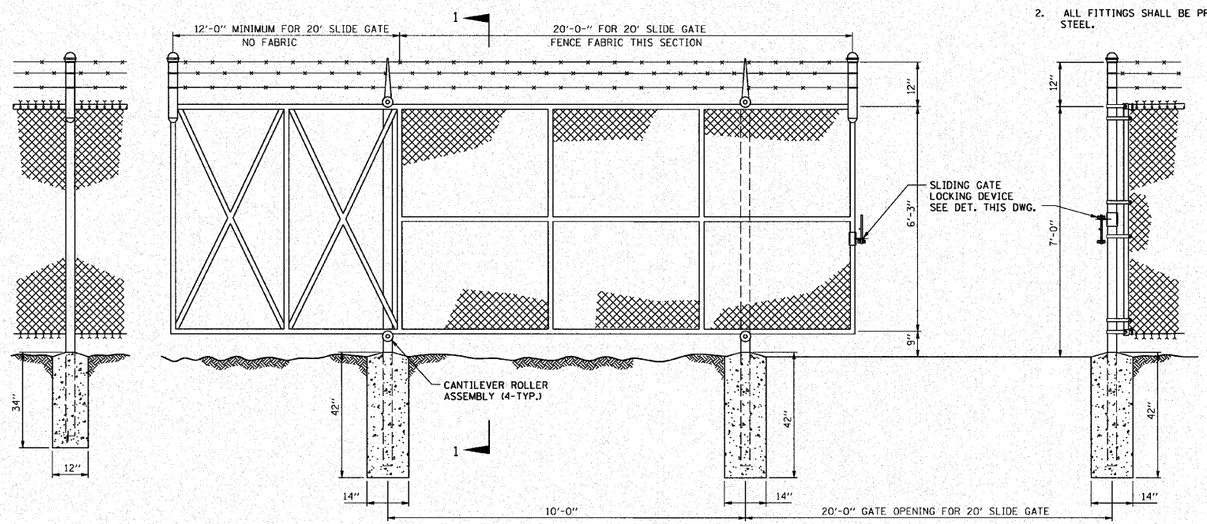

CANTILEVER SLIDE GATE

NOT TO SCALE

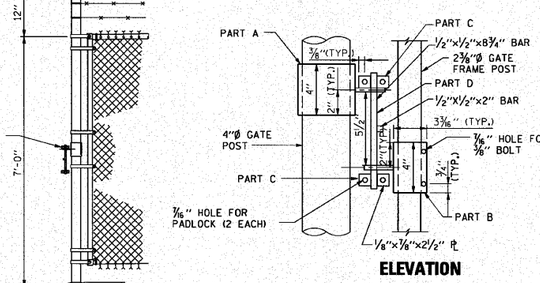

ELEVATION

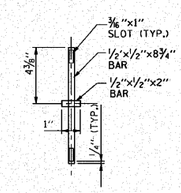

PART D DETAIL

SLIDE GATE LOCKING DEVICE

NOT TO SCALE

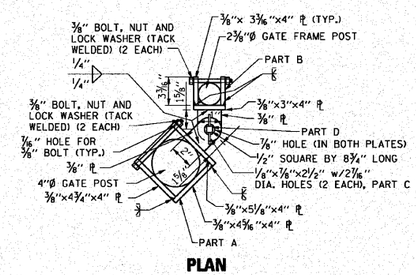

PLAN

NOTES:
LOCKING DEVICE SHALL BE GALVANIZED STEEL IN ACCORDANCE WITH ASTM A123-97

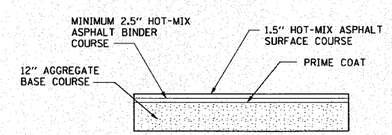

NEW SITE PAVEMENT

NOT TO SCALE

SPECIFICATIONS			
FABRIC	MESH	GAUGE	SELVAGE
ALUM.	2"	9	K+B
BARBED WIRE	TYPE 4 PT.	3 STR. ☒	6 STR.. ☐
FRMWRK.	O.D.	WALL	LBS/LF
TOP & BOT. RAIL	1⅝"	.140	2.27
LINE POSTS	2⅜"	.154	3.65
BRACE RAIL	1⅝"	.140	2.27
CORNER POSTS	2⅞"	.203	5.79
END POSTS	2⅞"	.203	5.79

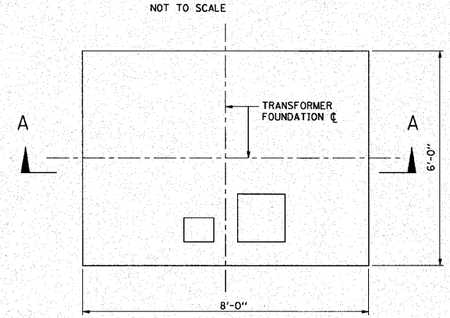

PLAN

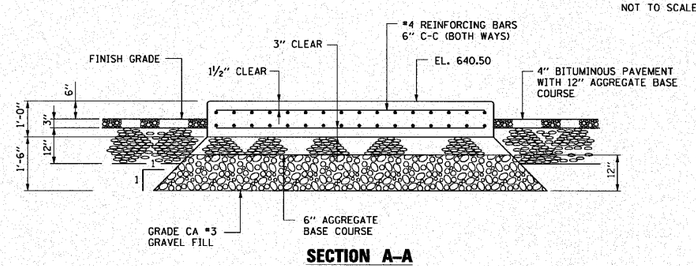

SECTION A–A

COMED TRANSFORMER FOUNDATION

SCALE: ½" = 1'-0"

NOTE: COORDINATE WITH COMED FOR THE OFFSETS/SETBACKS OPENINGS/CONDUITS.

DONOHUE & ASSOCIATES

G7

REVISIONS	
NAME	DATE

ILLINOIS DEPARTMENT OF TRANSPORTATION

PUMP STATION NO. 24 RELOCATION

GENERAL DETAILS

SCALE: AS SHOWN — DRAWN BY: HFF

DATE: 11-22-10 — CHECKED BY: KHC