ROUTE NO.	SECTION	COUNTY	TOTAL SHEETS	SHEET NO.
F.A.P. RTE. 774	107BY	EFFINGHAM	344	307
FED. ROAD DIST. NO. 7	ILLINOIS	FED. AID PROJECT-		

SHEET NO. 15
29 SHEETS

CONTRACT NO. 94827

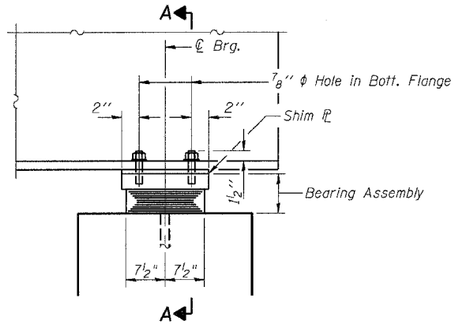

ELEVATION AT PIER 1

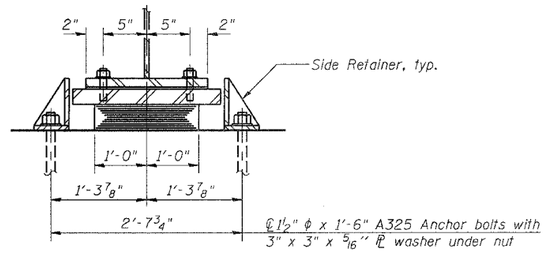

SECTION A-A

TYPE I ELASTOMERIC EXP. BRG. PIER 1

* Field weld at existing girders.
Cost included with Jacking and Cribbing.

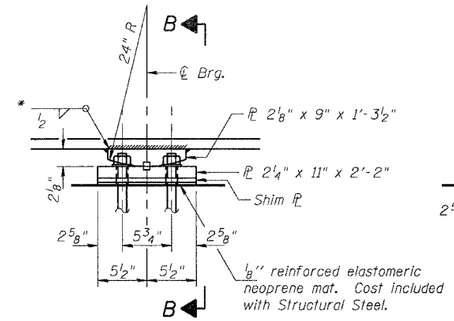

ELEVATION AT PIER 2

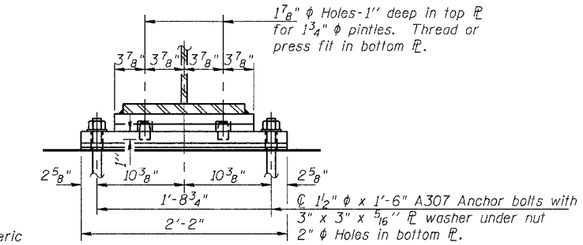

SECTION B-B

FIXED BEARING PIER 2

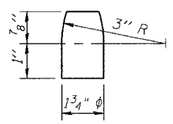

PINTLE

NOTES

See sheet 16 of 29 for Anchor Bolt installation.
7/8" ϕ holes in bottom flange for - 3/4" ϕ studs will be drilled in the field for existing girders. Cost included with Jacking and Cribbing.
Anchor bolts at fixed bearings may be built into the masonry at proposed girders.
The Structural Steel bearing plates of the elastomeric bearing assembly shall conform to the requirements of AASHTO M270, Grade 50.

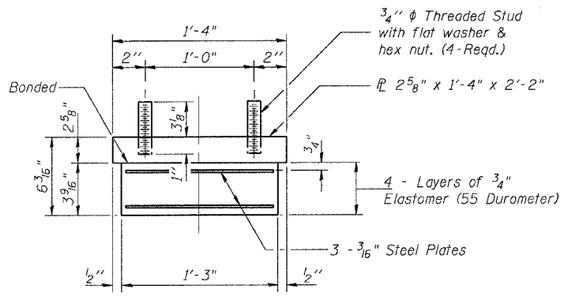

BEARING ASSEMBLY

Note: Shim plates shall not be placed under Bearing Assembly.

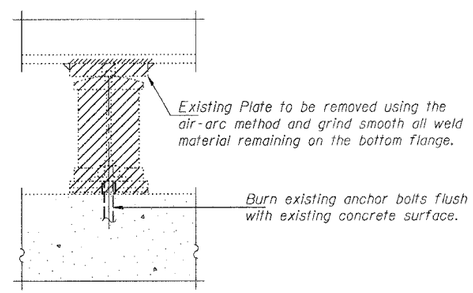

EXISTING BEARING REMOVAL DETAIL

Cost of existing bearing removal and disposal is included with Jacking and Cribbing. Total number to be removed = 24

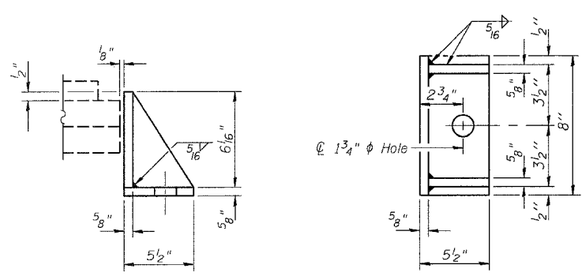

SIDE RETAINER

Equivalent rolled angle with stiffeners will be allowed in lieu of welded plates. Weight included with Structural Steel.

JACKING AND CRIBBING PROCEDURE

1. The Contractor shall submit for approval by the Engineer, plans for jacking and cribbing prior to commencing any work at the bearings. See Special Provision for Jacking and Cribbing. Dead Load = 7 k per girder at each abutment and 23 k per girder at each pier. Use 10 ton min jack capacity at abutments and 25 ton min jack capacity at the piers.
2. Jacking and Cribbing shall be done after the existing concrete deck is removed.
3. The existing structural steel shall be raised according to the Special Provision for Jacking and Cribbing and to a height sufficient to form, pour and cure the concrete bearing seats, remove the existing bearings and install the new bearings.
4. Once the new bearings are in place the existing steel can be lowered into place and connected to the bearings.
5. After the existing and proposed girders are sitting on and connected to the new bearings and the proposed diaphragms are in place, forming for the new deck pour can begin.

BILL OF MATERIAL

Item	Unit	Total
Elastomeric Bearing Assembly Type I	Each	10
Jacking and Cribbing	L. Sum	1

SHEET TITLE
BEARING DETAILS

PROJECT
IL RTE. 32/33 OVER LITTLE WABASH RIVER
F.A.P. RTE. 774 SECTION 107BY
EFFINGHAM COUNTY
STATION 1011+50.17
STRUCTURE NO. 025-0078

PROJECT NO. 02017
SCALE
DATE
DRAWN BY TFG/CFC
CHECKED BY GJB/MCB
DRAWING NO. 15
OF 29 SHTS

COOMBE-BLOXDORF P.C.
Engineers/Land Surveyors
Springfield, Illinois
Design Firm License No. 184-002703

..\FINAL PLANS\sheet-15.dgn 10/26/04 02:31:39 AM

SDATES
SFILENBREV#