85335

| FAS ROUTE NO. | SEC | COUNTY | TOTAL SHEETS | SHEET NO |
|---|---|---|---|---|
| — | * | LEE | 23 | 15 |

ILLINOIS PROJECT TE-D2(115)

* 01-P4000-00-BT

# INLET SPECIAL NO. 3

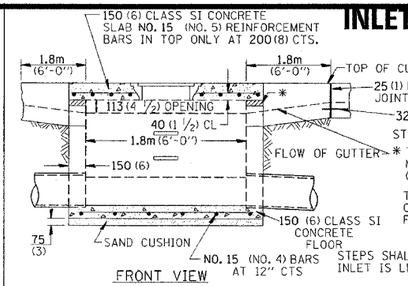


FRONT VIEW

STEPS AT 300 (12) TO 400 (16) CTS.

* THE WALL ADJUSTMENTS SHALL BE MADE WITH CONCRETE BUILDING BRICK OR CLASS SI CONCRETE.

THE HEIGHT OF THE BOX MAY BE CONSTRUCTED 150 (6) SHORT TO ALLOW FOR FIELD ADJUSTMENTS.

SEE STANDARD 602701 FOR DETAILS OF STEPS.

25 (1) PREFORMED EXPANSION JOINTS AS SHOWN SHALL BE PROVIDED ON EACH SIDE OF INLET.

CLASS SI CONCRETE OR PRECAST CONCRETE SHALL BE USED TROUGHOUT.

THE SIDE WALLS MAY BE BUILT AS PRECAST SEGMENTAL SECTIONS.

## LIGHT WEIGHT MANHOLE CASTING

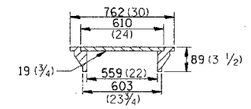


TOTAL WEIGHT 73 KG. (160 LBS.)

## NOTES

STEPS SHALL BE OMITTED WHEN DEPTH OF INLET IS LESS THAN 1.5 m (5 ft.)

THE INLET SHALL BE CAST IN PLACE OR PRECAST.

EXCEPT AS NOTED HEREON INLET SPECIAL NO. 3 SHALL BE CONSTRUCTED IN ACCORDANCE WITH SECTION 602 OF THE STANDARD SPECIFICATIONS.

THE CONTRACT UNIT PRICE EACH FOR INLET SPECIAL NO. 3 SHALL INCLUDE THE COST OF FURNISHING AND INSTALLING THE FRAME, LID, REINFORCEMENT BARS, FLOOR AND TOP SLABS, CAST IRON STEPS (IF USED).

THE CURB AND GUTTER WILL BE PAID FOR SEPARATELY AND WILL BE MEASURED THROUGH THE INLET.

THE CURB AND GUTTER ADJACENT TO AND 1.8m (6 FT) ON EITHER SIDE OF THE INLET SHALL BE CONSTRUCTED AS SHOWN WITH NO ADDITIONAL COMPENSATION FOR THE TRANSITION.

ALL DIMENSIONS ARE IN MILLIMETERS (INCHES) UNLESS OTHERWISE NOTED.

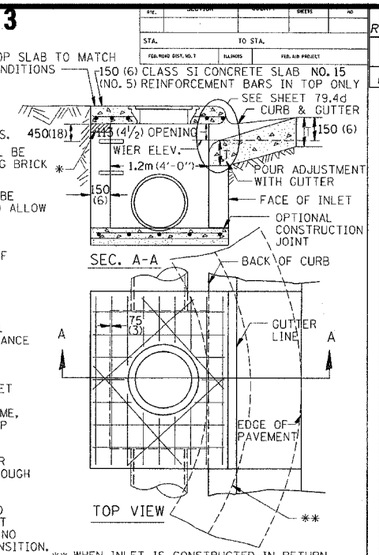


** WHEN INLET IS CONSTRUCTED IN RETURN, THE TOP OF SLAB SHALL CONFORM TO THE RADIUS OF THE RETURN.

REVISED 11-10-94 79.4

# NOSE TYPE FOR INLET TOP SLAB

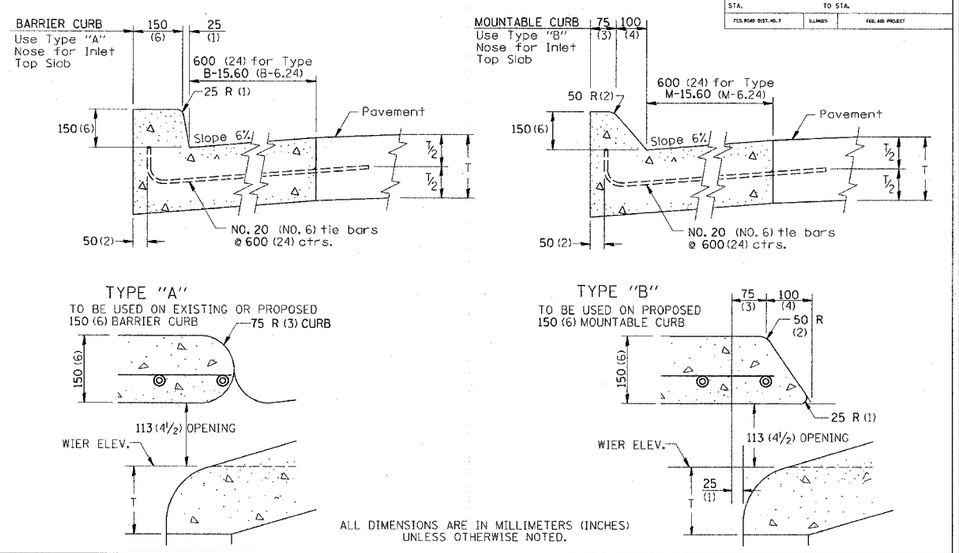


ALL DIMENSIONS ARE IN MILLIMETERS (INCHES) UNLESS OTHERWISE NOTED.

REVISED 2-14-95 79.4d

© WENDLER ENGINEERING SERVICES, INC. 2004


WENDLER ENGINEERING SERVICES, INC.
Structural & Civil Engineers–Land Surveying–Environmental Services
Illinois Professional Design Firm No. 184–000848

1968 - 2004 AFTER 36 YEARS, WE'RE STILL "Turning Ideas... ...Into Reality!!!"

698 TIMBER CREEK ROAD – P.O. BOX 486 – DIXON, IL 61021 – 815–288–2261
28 E. MARION – SUITE 3 – PRINCETON, IL 61356 – 815–879–4731
1770 WEST STATE ST. – SYCAMORE, IL 60178 – 815–895–5008
804 FREEPORT RD. – STERLING, IL 61081 – (815) 626–4428
E–MAIL: info@wendler.nu


SCALE: 1" = NTS

| REVISION | DATE |
|---|---|
| | |

| | | |
|---|---|---|
| SURVEYED BY | JOB NO. 99022 | DRAWN BY BDS | DESIGNED BY |
| BOOK NO. | DRAWING NAME DETAILS | DRAWING DATE 2/3/2004 | |

TITLE

TITLE GENERAL DETAILS

CLIENT DIXON PARK DISTRICT