F.A.P. RTE.	SECTION	COUNTY	TOTAL SHEETS	SHEET NO.
	01-00177-00-BT	COOK	18	11
STA.		TO STA.		
FED. ROAD DIST. NO.	ILLINOIS	FED. AID PROJECT		

CONTRACT NO. 83780

ELECTRICAL GENERAL NOTES:

1. IT SHALL BE THE CONTRACTOR'S RESPONSIBILITY TO MARK THE PROPOSED LOCATIONS OF ALL LIGHT POLE FOUNDATIONS, CENTER LINE OF TRENCH AND PUSHES AND THE LIGHTING CONTROLLER FOR EXAMINATION AND CONFIRMATION WITH THE ENGINEER AT THE PRECONSTRUCTION INSPECTION. THE EXACT LOCATIONS OF ALL ITEMS SHALL BE CONFIRMED WITH THE ENGINEER PRIOR TO STARTING WORK.
2. THE CONTRACTOR SHALL MAKE SPECIAL NOTE OF THE REQUIREMENTS FOR GROUNDING. GROUNDING CONNECTIONS AT THE FOUNDATION SHALL BE EXOTHERMICALLY WELDED, AS SPECIFIED, AND SHALL BE INSPECTED AND APPROVED BY THE RESIDENT ENGINEER PRIOR TO POURING CONCRETE OR BACKFILLING, AS APPLICABLE.
3. THE CONTRACTOR SHALL MAKE SPECIAL NOTE OF THE SPECIFIED REQUIREMENTS FOR BURIED WARNING TAPE, SPECIFIED AS PART OF "TRENCH AND BACKFILL FOR ROADWAY LIGHTING". THE INSTALLATION OF THE TAPE SHALL BE INSPECTED BY THE ENGINEER PRIOR TO BACKFILLING OR DURING PLOWING OPERATIONS, AS APPLICABLE.
4. THE CONTRACTOR SHALL BE RESPONSIBLE FOR THE ESTABLISHMENT OF FINISHED GRADE. THE ENGINEER MAY ASSIST THE CONTRACTOR, AS APPLICABLE, BUT THE RESPONSIBILITY FOR COORDINATING THE FINISHED GRADE ELEVATION WITH THE TOP OF THE FOUNDATION HEIGHTS AND THE LIKE SHALL REMAIN WITH THE CONTRACTOR.
5. NO EQUIPMENT OR MATERIAL SHALL BE DELIVERED TO THE JOB SITE PRIOR TO THE APPROVAL AND INSPECTION BY THE ENGINEER. ANY EQUIPMENT OR MATERIAL DELIVERED TO THE JOB SITE PRIOR TO APPROVAL AND INSPECTION SHALL BE REMOVED FROM THE JOB SITE AT THE CONTRACTOR'S EXPENSE.
6. CONDUIT PUSHED AND IN TRENCH SHALL EXTEND FIVE (5) FEET BEYOND THE SHOULDER, CURB OR DRIVEWAY, AS APPLICABLE.
7. THE CONTRACTOR SHALL PROVIDE A 5/8" X 8' COPPER CLAD GROUND ROD AT EACH LIGHT POLE AND DISCONNECT SWITCH LOCATION.
8. THE UNIT DUCT AND CONDUIT SHALL BE INSTALLED MIN. 30 INCHES BELOW FINISHED GRADE (UNLESS DIRECTED OTHERWISE) COMPLETE WITH WARNING TAPE. CONTRACTOR SHALL HAND DIG TEST HOLES FOR EVERY 1000 FT. OF TRENCHING/PLOWING FOR ENGINEER'S APPROVAL OF THE INSTALLATION.
9. MATERIALS AND INSTALLATION METHODS SHALL COMPLY WITH CODES AND ORDINANCES OF FEDERAL, STATE AND LOCAL GOVERNING BODIES HAVING JURISDICTION. NATIONAL ELECTRICAL CODE (LATEST REVISION) SHALL BE CONSIDERED AS A MINIMUM REQUIREMENT.
10. IT IS CONTRACTOR'S RESPONSIBILITY TO COORDINATE THE LOCATION OF EXISTING UNDERGROUND UTILITIES PRIOR TO THE START OF CONSTRUCTION. CONTACT J.U.L.I.E. PRIOR TO THE START OF ANY EXCAVATION WORK.
11. FOR LOCATION OF EXISTING UNDERGROUND MUNICIPAL UTILITIES CALL THE VILLAGE OF WILMETTE.
12. MATERIAL QUANTITIES ARE APPROXIMATIONS ONLY. IT IS CONTRACTOR'S RESPONSIBILITY TO FIELD VERIFY ALL QUANTITIES PRIOR TO ORDERING MATERIAL.
13. ALL PROPOSED LIGHT POLE FOUNDATIONS, DISCONNECT SWITCHES, UNIT DUCT, AND CONDUIT SHALL BE INSTALLED AS SHOWN ON THE PLANS. THE EXACT LOCATION IS TO BE CONFIRMED IN THE FIELD BY THE RESIDENT ENGINEER.
14. CONTRACTOR SHALL SUBMIT "RECORD DRAWINGS" A MINIMUM OF 7 DAYS PRIOR TO THE FINAL INSPECTION. "RECORD DRAWINGS" SHALL BE UPDATED REGULARLY DURING CONSTRUCTION AND INDICATE ALL LIGHTING MATERIAL INSTALLATION WITH ANY CHANGES IN RED.
15. ALL AREAS DISTURBED UNDER THIS CONTRACT SHALL BE RESTORED TO ORIGINAL CONDITION OR BETTER, TO THE SATISFACTION OF ENGINEER.
16. THE VILLAGE OF WILMETTE PUBLIC WORKS ELECTRIC DIVISION WILL MAKE ALL FINAL CONNECTIONS TO SYSTEM AND INSTALL/CONNECT ALL LIGHTING UNITS.
17. THE CONTRACTOR MUST HAVE A QUALIFIED ELECTRICIAN ON SITE WHEN CIRCUITS ARE ENERGIZED BY THE VILLAGE OF WILMETTE.
18. THE VILLAGE OF WILMETTE WILL FURNISH THE METAL HELIX FOUNDATIONS FOR CONTRACTOR INSTALLATION. CONTACT VILLAGE DEPARTMENT OF PUBLIC WORK TWO (2) WEEKS PRIOR TO INSTALLATION FOR DELIVERY COORDINATION.
19. QUANTITY OF PUSHED CONDUIT AND CONDUIT IN TRENCH ARE APPROXIMATE ONLY. CONTRACTOR SHALL FIELD VERIFY THE QUANTITIES PRIOR TO ORDERING THE MATERIAL AND INSTALL CONDUITS IN FULL COMPLIANCE WITH THE DETAILS AND SPECIFICATIONS SET REQUIREMENTS.
20. IT SHALL BE THE RESPONSIBILITY OF THE CONTRACTOR TO LOCATE, FLAG AND PROTECT ALL EXISTING UNDERGROUND UTILITIES PRIOR TO AND DURING CONSTRUCTION. ANY DAMAGE TO EXISTING UTILITIES DURING CONSTRUCTION SHALL BE REPAIRED IMMEDIATELY AT NO EXTRA COST TO THE VILLAGE. THIS WORK SHALL NOT BE PAID FOR SEPARATELY BUT SHALL BE CONSIDERED INCIDENTAL TO THE INSTALLATION OF THE PROPOSED CABLE IN UNIT DUCT. REFER TO CIVIL PLAN SHEETS FOR LOCATIONS OF EXISTING UNDERGROUND UTILITIES. ALL EXISTING UNDERGROUND UTILITIES NOT SHOWN ON THE LIGHTING PLAN SHEETS FOR SAKE OF CLARITY.
21. UNLESS OTHERWISE INDICATED, ALL ITEMS AND WORK SHOWN ON THESE PLANS ARE PROPOSED NEW ITEMS OF WORK.

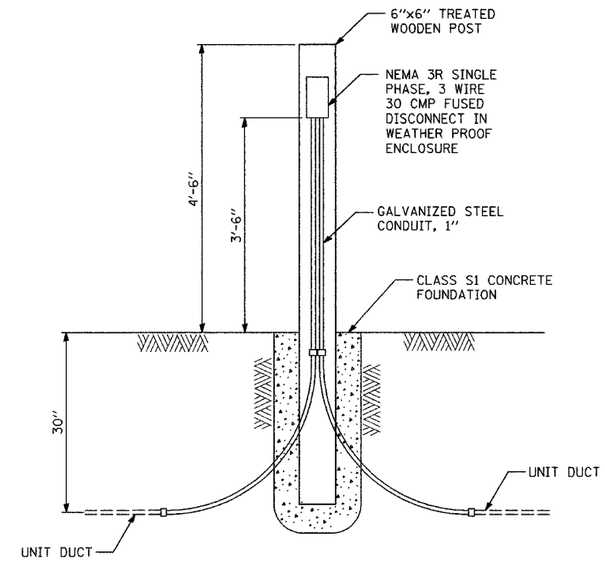

FUSED DISCONNECT SWITCH WITH POST

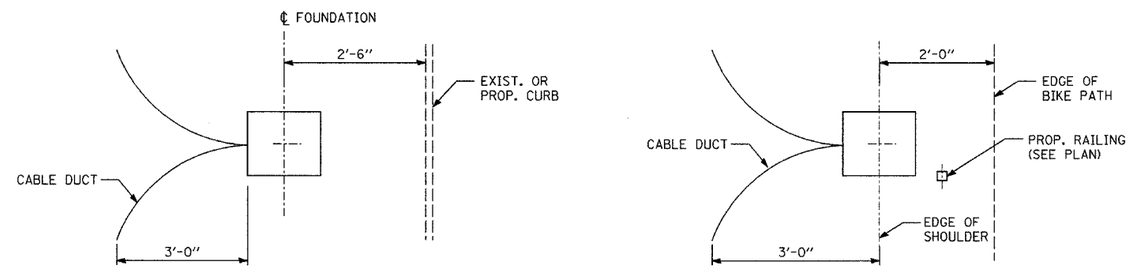

TYPICAL POLE FOUNDATION PLAN

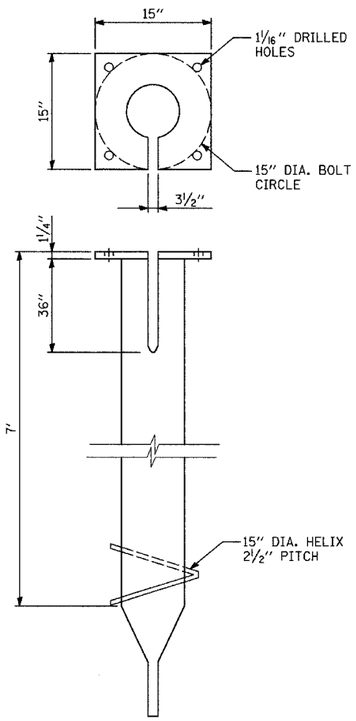

HELIX FOUNDATION

NOTE: SHOWN FOR INFORMATIONAL PURPOSES ONLY. ACTUAL UNIT DIMENSIONS MAY VARY.

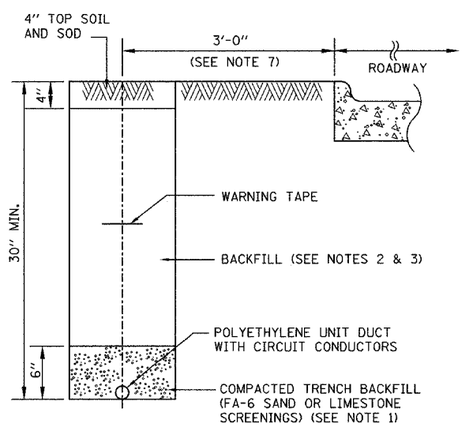

TYPICAL UNIT DUCT TRENCH DETAIL

(ALONG ROADWAY)

NOTES:

1. UNIT DUCT INSTALLED IN TRENCHES SHALL BE COVERED WITH A MINIMUM OF 6" OF COMPACTED FA-6 OR LIMESTONE SCREENINGS.
2. IN GRASSY AREAS, THE BACKFILL MAY BE COMPACTED EARTH.
3. TRENCHES WITHIN 2' OF PROPOSED OR EXISTING STREETS, DRIVEWAYS, OR SIDEWALKS SHALL BE BACKFILLED WITH COMPACTED FA-6 SAND OR LIMESTONE SCREENINGS.
4. WHERE 2 OR MORE UNIT DUCTS RUN ADJACENT TO EACH OTHER, THEY SHALL BE PLACED IN A COMMON TRENCH SO AS NOT TO CROSS EACH OTHER.
5. 6" WIDE REINFORCED METALLIC WARNING TAPE, RED WITH BLACK LETTERING TO READ "CAUTION-ELECTRICAL LINE BURIED BELOW". WARNING TAPE TO BE PLACED 1' MINIMUM TO 2' MAXIMUM BELOW FINISHED GRADE.
6. ALL GRASSY AREAS DISTURBED DURING CONSTRUCTION SHALL BE RESTORED WITH 4" OF TOPSOIL AND SOD.
7. EXACT DISTANCE SHALL BE FIELD COORDINATED.

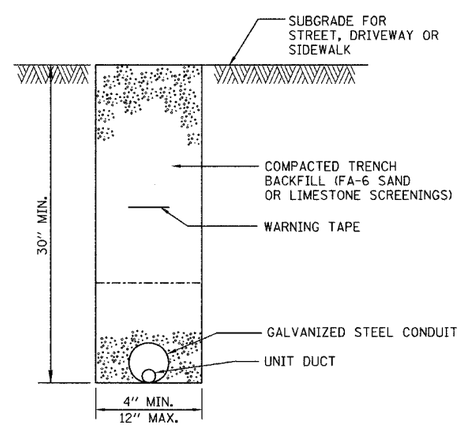

TYPICAL CONDUIT TRENCH DETAIL

(UNDER PAVEMENT)

NOTES:

1. CONDUIT SHALL BE HOT DIP GALVANIZED STEEL, A MINIMUM OF 4" IN DIAMETER.
2. CONDUIT SHALL EXTEND A MINIMUM OF 5' BEYOND THE STREET, DRIVEWAY, OR SIDEWALK
3. CONDUIT SHALL HAVE BOTH ENDS CAPPED UNTIL USED.
4. WHEN PLACED INTO SERVICE, CONDUIT SHALL BE PROVIDED WITH AN INSULATED FIBER BUSHING, AND SEALED WITH A WORKABLE SOFT PLASTIC SEALING COMPOUND AT EACH END.
5. 6" WIDE REINFORCED METALLIC WARNING TAPE, RED WITH BLACK LETTERING TO READ "CAUTION-ELECTRICAL LINE BURIED BELOW". WARNING TAPE TO BE PLACED 1' MINIMUM TO 2' MAXIMUM BELOW FINISHED GRADE.
6. ALL GRASSY AREAS DISTURBED DURING CONSTRUCTION SHALL BE RESTORED WITH 4" OF TOPSOIL AND SOD.

REVISIONS	
NAME	DATE

ILLINOIS DEPARTMENT OF TRANSPORTATION

SHERIDAN ROAD BIKE PATH

ELECTRICAL GENERAL NOTES AND DETAILS

SCALE: NONE — DRAWN BY: MB

DATE: 11/05/2004 — CHECKED BY:

PLAN	BY	DATE
SURVEYED		
PLOTTED		
ALIGNMENT CHECKED		
R.O.W. CHECKED		
NOTE BOOK NO.		
CADD FILE NAME		

PROFILE	BY	DATE
SURVEYED		
PLOTTED		
GRADES CHECKED		
S.M.A. NOTED		
NOTE BOOK NO.	STRUCTURE NOTAT'NS CHKD	